GROUP TAB LOCATOR

IN	Introduction
0	Lubrication and Maintenance
2	Suspension
3	Differential and Driveline
5	Brakes
5a	Brakes
6	Clutch
6a	Clutch
7	Cooling System
7a	Cooling System
8A	Battery
8B	Starting Systems
8C	Charging System
8D	Ignition System
8E	Instrument Panel Systems
8Ea	Instrument Panel Systems
8F	Audio System
8Fa	Audio System
8G	Horn System
8H	Vehicle Speed Control System
8J	Turn Signal and Hazard Warning Systems
8Ja	Turn Signal and Hazard Warning Systems
8K	Wiper and Washer Systems
8Ka	Wiper and Washer Systems
8L	Lamps
8La	Lamps
8M	Restraint Systems
8N	Electrically Heated Systems
8O	Power Distribution Systems
8P	Power Lock Systems
8Pa	Power Lock Systems
8Q	Vehicle Theft/Security Systems
8Qa	Vehicle Theft/Security Systems
8R	Power Seat Systems
8S	Power Window Systems
8T	Power Mirror Systems
8Ta	Power Mirror Systems
8U	Chime Warning Systems
8V	Overhead Console Systems
8W	Wiring Diagrams
9	Engine
9a	Engine
11	Exhaust System
13	Frame and Bumpers
13a	Frame and Bumpers
14	Fuel System
19	Steering
19a	Steering
21	Transaxle
22	Tires and Wheels
23	Body
24	Heating and Air Conditioning
24a	Heating and Air Conditioning
25	Emission Control Systems
	Service Manual Comment Forms

INTRODUCTION

TABLE OF CONTENTS

	page
DESCRIPTION AND OPERATION	
VEHICLE IDENTIFICATION NUMBER	1
VEHICLE SAFETY CERTIFICATION LABEL	2
BODY CODE PLATE	2
SERVICE PROCEDURES	
THREADED HOLE REPAIR	3
SPECIFICATIONS	
INTERNATIONAL VEHICLE CONTROL AND DISPLAY SYMBOLS	3
FASTENER IDENTIFICATION	4
FASTENER USAGE	4
METRIC SYSTEM	5

DESCRIPTION AND OPERATION

VEHICLE IDENTIFICATION NUMBER

The Vehicle Identification Number (VIN) is located on the upper left corner of the instrument panel, near the left A-Pillar. The VIN consists of 17 characters in a combination of letters and numbers that provide specific information about the vehicle (Fig. 1). Refer to VIN Code Decoding Chart.

To protect the consumer from theft and possible fraud the manufacturer is required to include a Check Digit at the ninth position of the Vehicle Identification Number. The check digit is used by the manufacturer and government agencies to verify the authenticity of the vehicle and official documentation. The formula to use the check digit is not released to the general public.

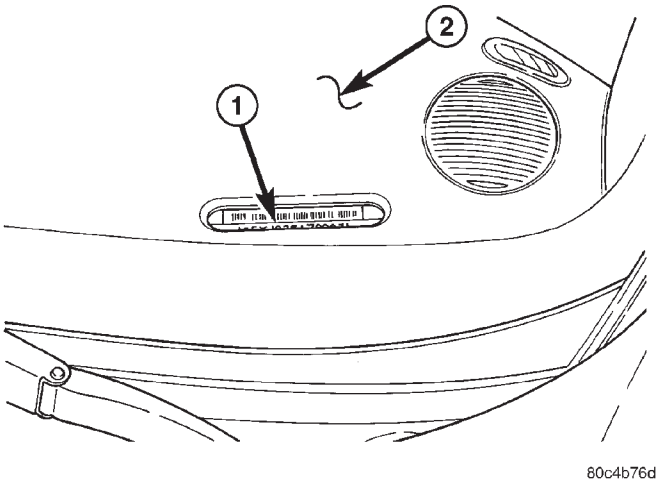

Fig. 1 Vehicle Identification Number Location

1 - Vehicle Identification Number (VIN)

2 - Instrument Panel

DESCRIPTION AND OPERATION (Continued)

VIN CODE DECODING

POSITION	INTERPRETATION	CODE = DESCRIPTION
1	Country of Origin	3 = Built in Mexico by DiamlerChrysler De Mexico
2	Make	C = Chrysler
3	Vehicle Type	4 = Multi-purpose Passenger Vehicle Less Side Air Bags A = Multi-purpose Passenger Vehicle with Side Air Bags
4	Other	F = 1815 - 2267 KG (4000 - 5000 lbs.)
5	Line	Y = Cruiser (LHD) Z = Cruiser (RHD)
6	Series	4 = High Line
7	Body Style	B = 4 Door Liftgate
8	Engine	B = 2.4 L 4 Cyl. 16V 9 = 2.0 L 4 Cyl. 16V
9	Check Digit	See explanation in this section.
10	Model Year	1= 2001
11	Assembly Plant	T = Toluca
12 Though 17	Vehicle Build Sequence	6 digit number assigned by assembly plant.

VEHICLE SAFETY CERTIFICATION LABEL

A vehicle safety certification label (Fig. 2) is attached to the rear facing of the driver's door. This label indicates date of manufacture (month and year), Gross Vehicle Weight Rating (GVWR), Gross Axle Weight Rating (GAWR) front, Gross Axle Weight Rating (GAWR) rear and the Vehicle Identification Number (VIN). The Month, Day and Hour of manufacture is also included.

All communications or inquiries regarding the vehicle should include the Month-Day-Hour and Vehicle Identification Number.

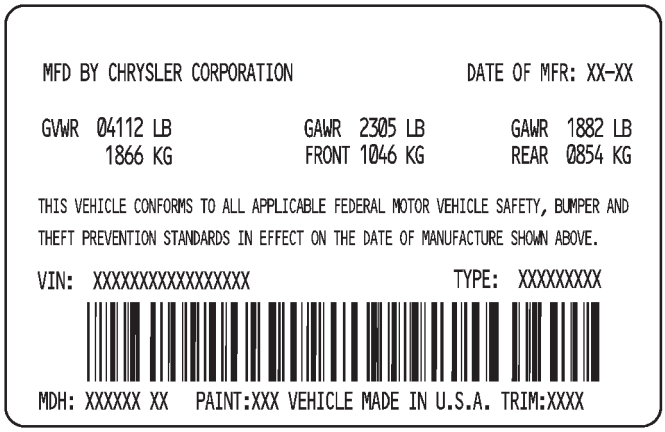

800dfad9

Fig. 2 Vehicle Safety Certification Label

BODY CODE PLATE

LOCATION AND DECODING

The Body Code Plate is located in the engine compartment on the cowl panel. There are seven lines of information on the body code plate. Lines 4, 5, 6, and 7 are not used to define service information. Information reads from left to right, starting with line 3 in the center of the plate to line 1 at the bottom of the plate.

BODY CODE PLATE – LINE 3

DIGITS 1, 2, AND 3

Paint procedure

DIGIT 4

Open Space

DIGITS 5 THROUGH 7

Primary paint
See Group 23, Body for color codes.

DIGIT 8 AND 9

Open Space

DIGITS 10 THROUGH 12

Secondary Paint

DIGIT 13 AND 14

Open Space

DESCRIPTION AND OPERATION (Continued)

DIGITS 15 THROUGH 18

Interior Trim Code

DIGIT 19

Open Space

DIGITS 20, 21, AND 22

Engine Code
- EDZ = 2.4L Four Cylinder DOHC Gasoline
- ECB = 2.0L Four Cylinder SOHC Gasoline

DIGIT 23

Open Space

BODY CODE PLATE LINE 2

DIGITS 1 THROUGH 12

Vehicle Order Number

DIGITS 13, THROUGH 15

Vinyl Roof Code

DIGITS 16 AND 17

Open space

DIGITS 18 AND 19

Vehicle Shell Line
- PT

DIGITS 20

Carline
- C = Chrysler

DIGIT 21

Price Class
- E = Economy
- H = High Line
- L = Low Line
- M = Mid Line
- P = Premium
- S = Special/Sport
- X = Performance Image

DIGITS 22 AND 23

Body Type
- 22 = Two Door Sedan
- 42 = Four Door Sedan

BODY CODE PLATE LINE 1

DIGITS 1, 2, AND 3

Transaxle Codes
- DGA = 41TE 4-Speed Automatic Transaxle
- DD4 = NV T350 5-Speed Manual Transaxle
- DD5 = NV T350 5-Speed Manual Transaxle

DIGIT 4

Open Space

DIGIT 5

Market Code
- C = Canada
- B = International
- M = Mexico
- U = United States

DIGIT 6

Open Space

DIGITS 7 THROUGH 23

Vehicle Identification Number
- Refer to Vehicle Identification Number (VIN) paragraph for proper breakdown of VIN code.

IF TWO BODY CODE PLATES ARE REQUIRED

The last code shown on either plate will be followed by END. When two plates are required, the last code space on the first plate will indicate (CTD)

When a second plate is required, the first four spaces of each line will not be used due to overlap of the plates.

SERVICE PROCEDURES

THREADED HOLE REPAIR

DESCRIPTION

Most stripped threaded holes can be repaired using a Helicoil ®. Follow the manufacture recommendation for application and repair procedures.

SPECIFICATIONS

INTERNATIONAL VEHICLE CONTROL AND DISPLAY SYMBOLS

DESCRIPTION

The graphic symbols illustrated in the following International Control and Display Symbols chart are used to identify various instrument controls. The symbols correspond to the controls and displays that are located on the instrument panel.

SPECIFICATIONS (Continued)

INTERNATIONAL CONTROL AND DISPLAY SYMBOLS

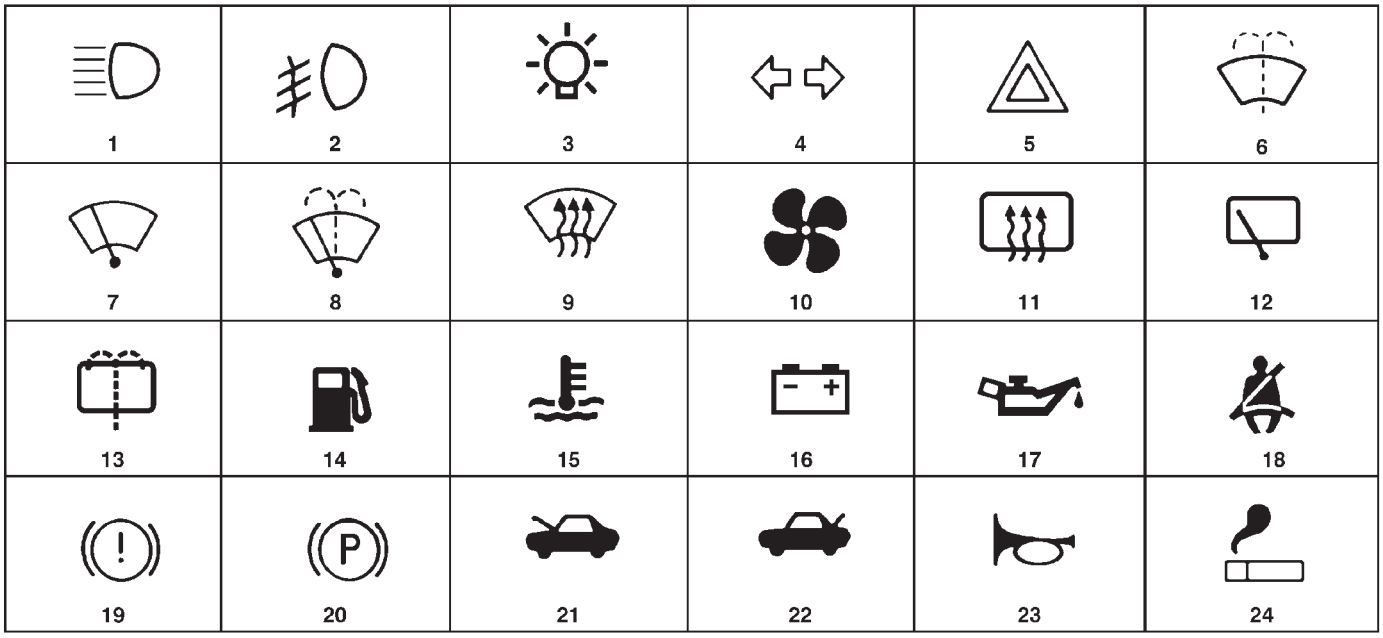

Fig. 3

1	High Beam	13	Rear Window Washer
2	Fog Lamps	14	Low Fuel Warning
3	Headlamp, Parking Lamps, Panel Lamps	15	Engine Coolant Temperature
4	Turn Warning	16	Battery Charging Condition
5	Hazard Warning	17	Engine Oil
6	Windshield Washer	18	Seat Belt
7	Windshield Wiper	19	Brake Failure
8	Windshield Wiper and Washer	20	Parking Brake
9	Windscreen Demisting and Defrosting	21	Front Hood
10	Ventilating Fan	22	Rear hood (Decklid)
11	Rear Window Defogger	23	Horn
12	Rear Window Wiper	24	Lighter

FASTENER IDENTIFICATION

DESCRIPTION

GRADE/CLASS IDENTIFICATION

The SAE bolt strength grades range from grade 2 to grade 8. The higher the grade number, the greater the bolt strength. Identification is determined by the line marks on the top of each bolt head. The actual bolt strength grade corresponds to the number of line marks plus 2. The most commonly used metric bolt strength classes are 9.8 and 10.9. The metric strength class identification number is imprinted on the head of the bolt. The higher the class number, the greater the bolt strength. Some metric nuts are imprinted with a single-digit strength class on the nut face. Refer to the Fastener Identification and Fastener Strength Charts.

FASTENER USAGE

DESCRIPTION

WARNING: USE OF AN INCORRECT FASTENER MAY RESULT IN COMPONENT DAMAGE OR PERSONAL INJURY.

SPECIFICATIONS (Continued)

Figure art, specifications and tightening torque references in this manual are identified in metric and SAE format.

During any maintenance or repair procedures, it is important to salvage all fasteners (nuts, bolts, etc.) for reassembly. If the fastener is not salvageable, a fastener of equivalent specification must be use.

METRIC SYSTEM

DESCRIPTION

The metric system is based on quantities of one, ten, one hundred, one thousand and one million.

The following chart will assist in converting metric units to equivalent English and SAE units, or vise versa.

SPECIFICATIONS (Continued)

FASTENER IDENTIFICATION

Bolt Markings and Torque - Metric

Commercial Steel Class

Bolt Head Markings

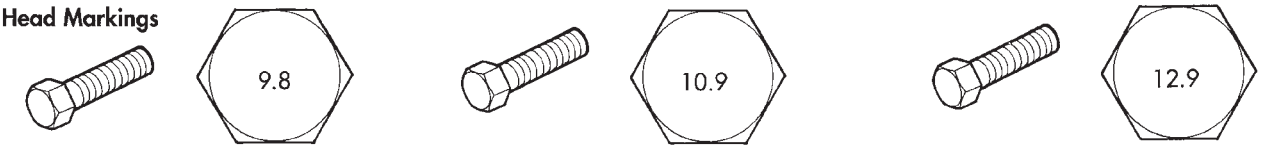

Body Size	Torque				Torque				Torque			
Diam.	Cast Iron		Aluminum		Cast Iron		Aluminum		Cast Iron		Aluminum	
mm	N•m	ft-lb	N•m	ft-lb	N•m	ft-lb	N•m	ft-lb	N•m	ft-lb	N•m	ft-lb
6	9	5	7	4	14	9	11	7	14	9	11	7
7	14	9	11	7	18	14	14	11	23	18	18	14
8	25	18	18	14	32	23	25	18	36	27	28	21
10	40	30	30	25	60	45	45	35	70	50	55	40
12	70	55	55	40	105	75	80	60	125	95	100	75
14	115	85	90	65	160	120	125	95	195	145	150	110
16	180	130	140	100	240	175	190	135	290	210	220	165
18	230	170	180	135	320	240	250	185	400	290	310	230

Bolt Markings and Torque Values - U.S. Customary

SAE Grade Number 5 8

Bolt Head Markings
These are all SAE Grade 5 (3) line

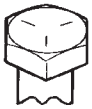

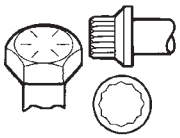

Body Size	Bolt Torque - Grade 5 Bolt				Bolt Torque - Grade 8 Bolt			
	Cast Iron		Aluminum		Cast Iron		Aluminum	
	N•m	ft-lb	N•m	ft-lb	N•m	ft-lb	N•m	ft-lb
1/4 - 20	9	7	8	6	15	11	12	9
- 28	12	9	9	7	18	13	14	10
5/16 - 18	20	15	16	12	30	22	24	18
- 24	23	17	19	14	33	24	25	19
3/8 - 16	40	30	25	20	55	40	40	30
- 24	40	30	35	25	60	45	45	35
7/16 - 14	60	45	45	35	90	65	65	50
- 20	65	50	55	40	95	70	75	55
1/2 - 13	95	70	75	55	130	95	100	75
- 20	100	75	80	60	150	110	120	90
9/16 - 12	135	100	110	80	190	140	150	110
- 18	150	110	115	85	210	155	170	125
5/8 - 11	180	135	150	110	255	190	205	150
- 18	210	155	160	120	290	215	230	170
3/4 - 10	325	240	255	190	460	340	365	270
- 16	365	270	285	210	515	380	410	300
7/8 - 9	490	360	380	280	745	550	600	440
- 14	530	390	420	310	825	610	660	490
1 - 8	720	530	570	420	1100	820	890	660
- 14	800	590	650	480	1200	890	960	710

SPECIFICATIONS (Continued)

FASTENER STRENGTH

HOW TO DETERMINE BOLT STRENGTH

	Mark	Class
Hexagon head bolt	Bolt head No. 4 — 4T; 5 — 5T; 6 — 6T; 7 — 7T; 8 — 8T; 9 — 9T; 10 — 10T; 11 — 11T	
	No mark	4T
Hexagon flange bolt w/washer hexagon bolt	No mark	4T
Hexagon head bolt	Two protruding lines	5T
Hexagon flange bolt w/washer hexagon bolt	Two protruding lines	6T
Hexagon head bolt	Three protruding lines	7T
Hexagon head bolt	Four protruding lines	8T

	Mark	Class
Stud bolt	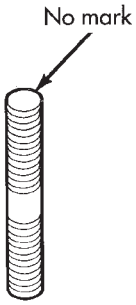 No mark	4T
	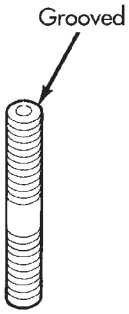 Grooved	6T
Welded bolt	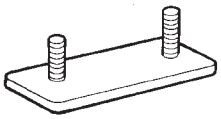	4T

SPECIFICATIONS (Continued)

CONVERSION FORMULAS AND EQUIVALENT VALUES

MULTIPLY	BY	TO GET	MULTIPLY	BY	TO GET
in-lbs	x 0.11298	= Newton Meters (N·m)	N·m	x 8.851	= in-lbs
ft-lbs	x 1.3558	= Newton Meters (N·m)	N·m	x 0.7376	= ft-lbs
Inches Hg (60° F)	x 3.377	= Kilopascals (kPa)	kPa	x 0.2961	= Inches Hg
psi	x 6.895	= Kilopascals (kPa)	kPa	x 0.145	= psi
Inches	x 25.4	= Millimeters (mm)	mm	x 0.03937	= Inches
Feet	x 0.3048	= Meters (M)	M	x 3.281	= Feet
Yards	x 0.9144	= Meters	M	x 1.0936	= Yards
mph	x 1.6093	= Kilometers/Hr. (Km/h)	Km/h	x 0.6214	= mph
Feet/Sec	x 0.3048	= Meters/Sec (M/S)	M/S	x 3.281	= Feet/Sec
mph	x 0.4470	= Meters/Sec (M/S)	M/S	x 2.237	= mph
Kilometers/ Hr. (Km/h)	x 0.27778	= Meters/Sec (M/S)	M/S	x 3.600	Kilometers/Hr. (Km/h)

COMMON METRIC EQUIVALENTS

1 inch = 25 Millimeters	1 Cubic Inch = 16 Cubic Centimeters
1 Foot = 0.3 Meter	1 Cubic Foot = 0.03 Cubic Meter
1 Yard = 0.9 Meter	1 Cubic Yard = 0.8 Cubic Meter
1 Mile = 1.6 Kilometers	

Refer to the Metric Conversion Chart to convert torque values listed in metric Newton- meters (N·m). Also, use the chart to convert between millimeters (mm) and inches (in.)

SPECIFICATIONS (Continued)

METRIC CONVERSION CHART

in-lbs to N•m

in- lb	N•m	in-lb	N•m	in-lb	N•m	in-lb	N•m	in-lb	N•m
2	.2260	42	4.7453	82	9.2646	122	13.7839	162	18.3032
4	.4519	44	4.9713	84	9.4906	124	14.0099	164	18.5292
6	.6779	46	5.1972	86	9.7165	126	14.2359	166	18.7552
8	.9039	48	5.4232	88	9.9425	128	14.4618	168	18.9811
10	1.1298	50	5.6492	90	10.1685	130	14.6878	170	19.2071
12	1.3558	52	5.8751	92	10.3944	132	14.9138	172	19.4331
14	1.5818	54	6.1011	94	10.6204	134	15.1397	174	19.6590
16	1.8077	56	6.3270	96	10.8464	136	15.3657	176	19.8850
18	2.0337	58	6.5530	98	11.0723	138	15.5917	178	20.1110
20	2.2597	60	6.7790	100	11.2983	140	15.8176	180	20.3369
22	2.4856	62	7.0049	102	11.5243	142	16.0436	182	20.5629
24	2.7116	64	7.2309	104	11.7502	144	16.2696	184	20.7889
26	2.9376	66	7.4569	106	11.9762	146	16.4955	186	21.0148
28	3.1635	68	7.6828	108	12.2022	148	16.7215	188	21.2408
30	3.3895	70	7.9088	110	12.4281	150	16.9475	190	21.4668
32	3.6155	72	8.1348	112	12.6541	152	17.1734	192	21.6927
34	3.8414	74	8.3607	114	12.8801	154	17.3994	194	21.9187
36	4.0674	76	8.5867	116	13.1060	156	17.6253	196	22.1447
38	4.2934	78	8.8127	118	13.3320	158	17.8513	198	22.3706
40	4.5193	80	9.0386	120	13.5580	160	18.0773	200	22.5966

N•m to in-lbs

N•m	in-lb	N•m	in-lb	N•m	in-lb	N•m	in-lb	N•m	in-lb
.2	1.7702	4.2	37.1747	8.2	72.5792	12.2	107.9837	16.2	143.3882
.4	3.5404	4.4	38.9449	8.4	74.3494	12.4	109.7539	16.4	145.1584
.6	5.3107	4.6	40.7152	8.6	76.1197	12.6	111.5242	16.6	146.9287
.8	7.0809	4.8	42.4854	8.8	77.8899	12.8	113.2944	16.8	148.6989
1	8.8511	5	44.2556	9	79.6601	13	115.0646	17	150.4691
1.2	10.6213	5.2	46.0258	9.2	81.4303	13.2	116.8348	17.2	152.2393
1.4	12.3916	5.4	47.7961	9.4	83.2006	13.4	118.6051	17.4	154.0096
1.6	14.1618	5.6	49.5663	9.6	84.9708	13.6	120.3753	17.6	155.7798
1.8	15.9320	5.8	51.3365	9.8	86.7410	13.8	122.1455	17.8	157.5500
2	17.7022	6	53.1067	10	88.5112	14	123.9157	18	159.3202
2.2	19.4725	6.2	54.8770	10.2	90.2815	14.2	125.6860	18.5	163.7458
2.4	21.2427	6.4	56.6472	10.4	92.0517	14.4	127.4562	19	168.1714
2.6	23.0129	6.6	58.4174	10.6	93.8219	14.6	129.2264	19.5	172.5970
2.8	24.7831	6.8	60.1876	10.8	95.5921	14.8	130.9966	20	177.0225
3	26.5534	7	61.9579	11	97.3624	15	132.7669	20.5	181.4480
3.2	28.3236	7.2	63.7281	11.2	99.1326	15.2	134.5371	21	185.8736
3.4	30.0938	7.4	65.4983	11.4	100.9028	15.4	136.3073	22	194.7247
3.6	31.8640	7.6	67.2685	11.6	102.6730	15.6	138.0775	23	203.5759
3.8	33.6342	7.8	69.0388	11.8	104.4433	15.8	139.8478	24	212.4270
4	35.4045	8	70.8090	12	106.2135	16	141.6180	25	221.2781

ft-lbs to N•m

ft-lb	N•m	ft-lb	N•m	ft-lb	N•m	ft-lb	N•m	ft-lb	N•m
1	1.3558	21	28.4722	41	55.5885	61	82.7049	81	109.8212
2	2.7116	22	29.8280	42	56.9444	62	84.0607	82	111.1770
3	4.0675	23	31.1838	43	58.3002	63	85.4165	83	112.5328
4	5.4233	24	32.5396	44	59.6560	64	86.7723	84	113.8888
5	6.7791	25	33.8954	45	61.0118	65	88.1281	85	115.2446
6	8.1349	26	35.2513	46	62.3676	66	89.4840	86	116.6004
7	9.4907	27	36.6071	47	63.7234	67	90.8398	87	117.9562
8	10.8465	28	37.9629	48	65.0793	68	92.1956	88	119.3120
9	12.2024	29	39.3187	49	66.4351	69	93.5514	89	120.6678
10	13.5582	30	40.6745	50	67.7909	70	94.9073	90	122.0236
11	14.9140	31	42.0304	51	69.1467	71	96.2631	91	123.3794
12	16.2698	32	43.3862	52	70.5025	72	97.6189	92	124.7352
13	17.6256	33	44.7420	53	71.8583	73	98.9747	93	126.0910
14	18.9815	34	46.0978	54	73.2142	74	100.3316	94	127.4468
15	20.3373	35	47.4536	55	74.5700	75	101.6862	95	128.8026
16	21.6931	36	48.8094	56	75.9258	76	103.0422	96	130.1586
17	23.0489	37	50.1653	57	77.2816	77	104.3980	97	131.5144
18	24.4047	38	51.5211	58	78.6374	78	105.7538	98	132.8702
19	25.7605	39	52.8769	59	79.9933	79	107.1196	99	134.2260
20	27.1164	40	54.2327	60	81.3491	80	108.4654	100	135.5820

N•m to ft-lbs

N•m	ft-lb	N•m	ft-lb	N•m	ft-lb	N•m	ft-lb	N•m	ft-lb
1	.7376	21	15.9888	41	30.2400	61	44.9913	81	59.7425
2	1.4751	22	16.2264	42	30.9776	62	45.7289	82	60.4801
3	2.2127	23	16.9639	43	31.7152	63	46.4664	83	61.2177
4	2.9502	24	17.7015	44	32.4527	64	47.2040	84	61.9552
5	3.6878	25	18.4391	45	33.1903	65	47.9415	85	62.6928
6	4.4254	26	19.1766	46	33.9279	66	48.6791	86	63.4303
7	5.1629	27	19.9142	47	34.6654	67	49.4167	87	64.1679
8	5.9005	28	20.6517	48	35.4030	68	50.1542	88	64.9545
9	6.6381	29	21.3893	49	36.1405	69	50.8918	89	65.6430
10	7.3756	30	22.1269	50	36.8781	70	51.6293	90	66.3806
11	8.1132	31	22.8644	51	37.6157	71	52.3669	91	67.1181
12	8.8507	32	23.6020	52	38.3532	72	53.1045	92	67.8557
13	9.5883	33	24.3395	53	39.0908	73	53.8420	93	68.5933
14	10.3259	34	25.0771	54	39.8284	74	54.5720	94	69.3308
15	11.0634	35	25.8147	55	40.5659	75	55.3172	95	70.0684
16	11.8010	36	26.5522	56	41.3035	76	56.0547	96	70.8060
17	12.5386	37	27.2898	57	42.0410	77	56.7923	97	71.5435
18	13.2761	38	28.0274	58	42.7786	78	57.5298	98	72.2811
19	14.0137	39	28.7649	59	43.5162	79	58.2674	99	73.0187
20	14.7512	40	29.5025	60	44.2537	80	59.0050	100	73.7562

in. to mm

in.	mm	in.	mm	in.	mm	in.	mm	in.	mm
.01	.254	.21	5.334	.41	10.414	.61	15.494	.81	20.574
.02	.508	.22	5.588	.42	10.668	.62	15.748	.82	20.828
.03	.762	.23	5.842	.43	10.922	.63	16.002	.83	21.082
.04	1.016	.24	6.096	.44	11.176	.64	16.256	.84	21.336
.05	1.270	.25	6.350	.45	11.430	.65	16.510	.85	21.590
.06	1.524	.26	6.604	.46	11.684	.66	16.764	.86	21.844
.07	1.778	.27	6.858	.47	11.938	.67	17.018	.87	22.098
.08	2.032	.28	7.112	.48	12.192	.68	17.272	.88	22.352
.09	2.286	.29	7.366	.49	12.446	.69	17.526	.89	22.606
.10	2.540	.30	7.620	.50	12.700	.70	17.780	.90	22.860
.11	2.794	.31	7.874	.51	12.954	.71	18.034	.91	23.114
.12	3.048	.32	8.128	.52	13.208	.72	18.288	.92	23.368
.13	3.302	.33	8.382	.53	13.462	.73	18.542	.93	23.622
.14	3.556	.34	8.636	.54	13.716	.74	18.796	.94	23.876
.15	3.810	.35	8.890	.55	13.970	.75	19.050	.95	24.130
.16	4.064	.36	9.144	.56	14.224	.76	19.304	.96	24.384
.17	3.318	.37	9.398	.57	14.478	.77	19.558	.97	24.638
.18	4.572	.38	9.652	.58	14.732	.78	19.812	.98	24.892
.19	4.826	.39	9.906	.59	14.986	.79	20.066	.99	25.146
.20	5.080	.40	10.160	.60	15.240	.80	20.320	1.00	25.400

mm to in.

mm	in.	mm	in.	mm	in.	mm	in.	mm	in.
.01	.00039	.21	.00827	.41	.01614	.61	.02402	.81	.03189
.02	.00079	.22	.00866	.42	.01654	.62	.02441	.82	.03228
.03	.00118	.23	.00906	.43	.01693	.63	.02480	.83	.03268
.04	.00157	.24	.00945	.44	.01732	.64	.02520	.84	.03307
.05	.00197	.25	.00984	.45	.01772	.65	.02559	.85	.03346
.06	.00236	.26	.01024	.46	.01811	.66	.02598	.86	.03386
.07	.00276	.27	.01063	.47	.01850	.67	.02638	.87	.03425
.08	.00315	.28	.01102	.48	.01890	.68	.02677	.88	.03465
.09	.00354	.29	.01142	.49	.01929	.69	.02717	.89	.03504
.10	.00394	.30	.01181	.50	.01969	.70	.02756	.90	.03543
.11	.00433	.31	.01220	.51	.02008	.71	.02795	.91	.03583
.12	.00472	.32	.01260	.52	.02047	.72	.02835	.92	.03622
.13	.00512	.33	.01299	.53	.02087	.73	.02874	.93	.03661
.14	.00551	.34	.01339	.54	.02126	.74	.02913	.94	.03701
.15	.00591	.35	.01378	.55	.02165	.75	.02953	.95	.03740
.16	.00630	.36	.01417	.56	.02205	.76	.02992	.96	.03780
.17	.00669	.37	.01457	.57	.02244	.77	.03032	.97	.03819
.18	.00709	.38	.01496	.58	.02283	.78	.03071	.98	.03858
.19	.00748	.39	.01535	.59	.02323	.79	.03110	.99	.03898
.20	.00787	.40	.01575	.60	.02362	.80	.03150	1.00	.03937

LUBRICATION AND MAINTENANCE

TABLE OF CONTENTS

page

LUBRICANTS 1
MAINTENANCE SCHEDULES 3
JUMP STARTING, TOWING, AND HOISTING. 8

LUBRICANTS

TABLE OF CONTENTS

page

DESCRIPTION AND OPERATION
PARTS AND LUBRICANT RECOMMENDATIONS 1
CLASSIFICATION OF LUBRICANTS. 1
INTERNATIONAL SYMBOLS 2
FLUID CHECK/FILL POINTS AND LUBRICATION LOCATIONS. 2
LUBRICATION POINT LOCATIONS 2
SPECIFICATIONS
FLUID CAPACITIES 2

DESCRIPTION AND OPERATION

PARTS AND LUBRICANT RECOMMENDATIONS

When service is required, DaimlerChrysler Corporation recommends that only Mopar® brand parts, lubricants and chemicals be used. Mopar provides the best engineered products for servicing DaimlerChrysler Corporation vehicles.

CLASSIFICATION OF LUBRICANTS

DESCRIPTION

Only lubricants bearing designations defined by the following organization should be used to service a DaimlerChrysler Corporation vehicle.

- Society of Automotive Engineers (SAE)
- American Petroleum Institute (API) (Fig. 1)
- National Lubricating Grease Institute (NLGI) (Fig. 2)

SAE VISCOSITY RATING

An SAE viscosity grade is used to specify the viscosity of engine oil. These are specified with a dual SAE viscosity grade which indicates the cold-to-hot temperature viscosity range. Example SAE 5W-30 = multiple grade engine oil.

DaimlerChrysler Corporation only recommends multiple grade engine oils.

API QUALITY CLASSIFICATION

This symbol (Fig. 1) on the front of an oil container means that the oil has been certified by the American Petroleum Institute (API) to meet all the lubrication requirements specified by DaimlerChrysler Corporation.

Refer to Engine for gasoline engine oil specification.

9400-9

Fig. 1 API Symbol

GEAR LUBRICANTS

SAE ratings also apply to multiple grade gear lubricants. In addition, API classification defines the lubricants usage. Such as API GL-5 and SAE 80W-90.

LUBRICANTS AND GREASES

Lubricating grease is rated for quality and usage by the NLGI. All approved products have the NLGI symbol (Fig. 2) on the label. At the bottom NLGI symbol is the usage and quality identification letters.

DESCRIPTION AND OPERATION (Continued)

Wheel bearing lubricant is identified by the letter “G”. Chassis lubricant is identified by the latter “L”. The letter following the usage letter indicates the quality of the lubricant. The following symbols indicate the highest quality.

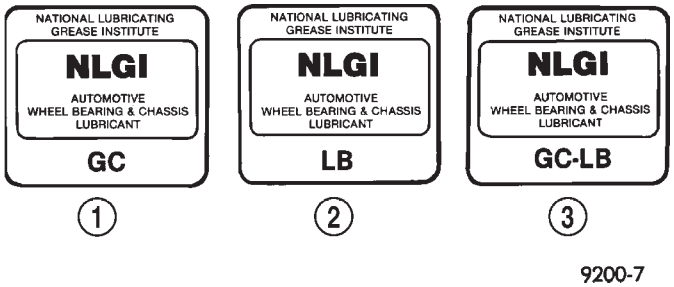

Fig. 2 NLGI Symbol

1 – WHEEL BEARINGS
2 – CHASSIS LUBRICATION
3 – CHASSIS AND WHEEL BEARINGS

INTERNATIONAL SYMBOLS

DESCRIPTION

DaimlerChrysler Corporation uses international symbols to identify engine compartment lubricant and fluid check and fill locations (Fig. 3).

FLUID CHECK/FILL POINTS AND LUBRICATION LOCATIONS

The fluid check/fill points and lubrication locations are located in each applicable area.

LUBRICATION POINT LOCATIONS

Lubrication point locations are located in each applicable area.

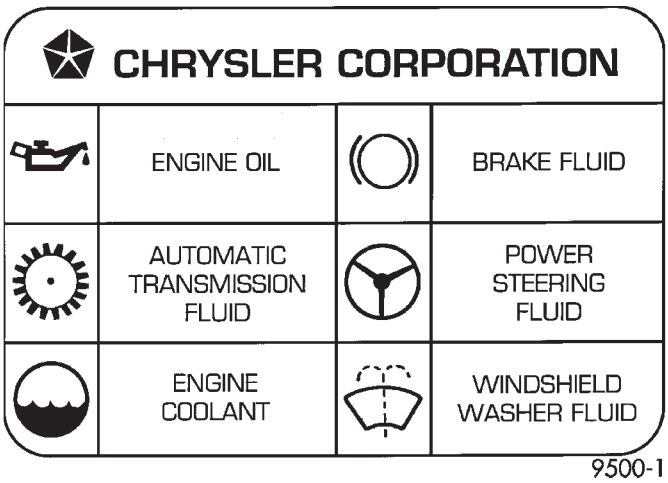

Fig. 3 International Symbols

SPECIFICATIONS

FLUID CAPACITIES

Fuel Tank (approximate) . . . . . 57 L (15.0 gal.)
Engine Oil – With Filter . . . . . 4.8 L (5.0 qts.)
Cooling System – Includes Heater & Coolant
Recovery Bottle* . . . . . 7.0 (7.4 qts.)
Automatic Transaxle – Estimated
Service Fill . . . . . 3.8 L (4.0 qts.)
Automatic Transaxle (41TE) – Overhaul Fill
Capacity with Torque Converter
Empty . . . . . 8.77 L (9.3 qts.)
Manual Transaxle – NV T350 . . . . . 2.4 to 2.7 L (2.5 to 2.8 qts.)

*Capacities include 1 qt. for coolant reserve tank.

MAINTENANCE SCHEDULES

TABLE OF CONTENTS

page

DESCRIPTION AND OPERATION
MAINTENANCE SCHEDULES 3
SPECIFICATIONS
UNSCHEDULED INSPECTION 3
SCHEDULE – A 3
SCHEDULE – B 4

DESCRIPTION AND OPERATION

MAINTENANCE SCHEDULES

There are two maintenance schedules that show proper service for your vehicle.

First is Schedule – **A**. It lists all the scheduled maintenance to be performed under "normal" operating conditions.

Second is Schedule – **B**. It is a schedule for vehicles that are operated under the following conditions:

- Frequent short trip driving less than 5 miles (8 km)
- Frequent driving in dusty conditions
- Extensive idling
- More than 50% of the driving is at sustained high speeds during hot weather, above 90° F (32° C)

SPECIFICATIONS

UNSCHEDULED INSPECTION

At Each Stop For Fuel

- Check engine oil level and add as required.
- Check windshield washer solvent and add as required.

Once A Month

- Check tire pressure and look for unusual wear or damage.
- Inspect the battery and clean and tighten terminals as required.
- Check fluid levels of coolant reservoir, brake master cylinder, power steering and transmission. Add fluid as required.
- Check all lights and all other electrical items for correct operation.

At Each Oil Change

- Inspect the exhaust system.
- Inspect brake hoses.
- Inspect the CV joints and front suspension component boots and seals.
- Rotate the tires at each oil change interval shown on Schedule – A (7,500 miles - 12 000 km) or every other interval on Schedule – B (6,000 miles - 10 000 km).
- Check the engine coolant level, hoses, and clamps.

If mileage is less than 7,500 miles (12 000 km) yearly, replace the engine oil filter at each oil change.

EMISSION CONTROL SYSTEM MAINTENANCE

The scheduled emission maintenance listed in **bold type** on the Maintenance Schedules, must be done at the mileage specified to assure the continued proper functioning of the emission control system. These, and all other maintenance services included in this manual, should be done to provide the best vehicle performance and reliability. More frequent maintenance may be needed for vehicles in severe operating conditions such as dusty areas and very short trip driving.

FLUID FILL POINTS AND LUBRICATION LOCATIONS

The fluid fill/check locations and lubrication locations are located in each applicable area.

SCHEDULE – A

7,500 Miles (12 000 km) or at 6 months

- Change the engine oil.
- Replace the engine oil filter.

15,000 Miles (24 000 km) or at 12 months

- Change the engine oil.
- Replace the engine oil filter.

22,500 Miles (36 000 km) or at 18 months

- Change the engine oil.
- Replace the engine oil filter.
- Inspect the front brake pads and rear brake linings.

SPECIFICATIONS (Continued)

30,000 Miles (48 000 km) or at 24 months

- Change the engine oil.
- Replace the engine oil filter.
- Inspect the tie rod ends and boot seals.
- Adjust the generator drive belt tension.
- **Replace the engine air cleaner element (filter).**
- **Replace the engine spark plugs**

37,500 Miles (60 000 km) or at 30 months

- Change the engine oil.
- Replace the engine oil filter.

45,000 Miles (72 000 km) or at 36 months

- Change the engine oil.
- Replace the engine oil filter.
- Inspect the front brake pads and rear brake linings.

52,500 Miles (84 000 km) or at 42 months

- Change the engine oil.
- Replace the engine oil filter.

60,000 Miles (96 000 km) or at 48 months

- Change the engine oil.
- Replace the engine oil filter.
- Inspect the tie rod ends and boot seals.
- **Check the PCV valve and replace, if necessary.** See note #1 at end of schedule.
- Replace the drive belts if necessary.
- **Replace the engine air cleaner element (filter).**
- **Replace the ignition cables.**
- **Replace the spark plugs.**

67,500 Miles (108 000 km) or at 54 months

- Change the engine oil.
- Replace the engine oil filter.
- Inspect the front brake pads and rear brake linings.

75,000 Miles (120 000 km) or at 60 months

- Change the engine oil.
- Replace the engine oil filter.

82,500 Miles (132 000 km) or at 66 months

- Change the engine oil.
- Replace the engine oil filter.

90,000 Miles (144 000 km) or at 72 months

- Change the engine oil.
- Replace the engine oil filter.
- Inspect the tie rod ends and boot seals.
- **Check the PCV valve and replace, if necessary.** See note #1 at end of schedule.
- Inspect the front brake pads and rear brake linings.
- Adjust the generator drive belt tension.
- **Replace the engine air cleaner element (filter).**
- **Replace the spark plugs.**

97,500 Miles (156 000 km) or at 78 months

- Change the engine oil.
- Replace the engine oil filter.

100,000 Miles (160 000 km) or at 60 months

- Flush and replace the engine coolant.

105,000 Miles (168 000 km) or at 84 months

- Change the engine oil.
- Replace the engine oil filter.

112,500 Miles (180 000 km) or at 90 months

- Change the engine oil.
- Replace the engine oil filter.

120,000 Miles (192 000 km) or at 96 months

- Change the engine oil.
- Replace the engine oil filter.
- Inspect the tie rod ends and boot seals.
- **Check the PCV valve and replace, if necessary.** See note #1 at end of schedule.
- Replace the drive belts if necessary.
- **Replace the engine timing belt.**
- **Replace the engine air cleaner element (filter).**
- **Replace the ignition cables.**
- **Replace the engine spark plugs**

#1—This maintenance is recommended by DaimlerChrysler Corporation to the owner but is not required to maintain the emissions warranty.

NOTE: Inspection and service should also be performed anytime a malfunction is observed or suspected. Retain all receipts.

SCHEDULE – B

Follow this schedule if you usually operate your vehicle under one or more of the following conditions.

- Day and night temperatures are below freezing
- Stop and go driving
- Long periods of engine idling
- Driving in dusty conditions
- Short trips of less than 5 miles
- Operation at sustained high speeds during hot weather, above 90°F (32°C)
- Taxi, police or delivery service
- Trailer towing

At Each Stop For Gasoline

- Check the engine oil level and add as required.
- Check the windshield washer solvent and add as required.

SPECIFICATIONS (Continued)

Once A Month

- Check the tire pressure and look for unusual wear or damage.
- Inspect the battery and clean and tighten terminals as required.
- Check the fluid levels of coolant reservoir, brake master cylinder, power steering and transmission. Add fluid as required.
- Check all lights and all other electrical items for correct operation.

At Each Oil Change

- Inspect the exhaust system
- Inspect the brake hoses.
- Inspect the CV joints and front suspension components.
- Rotate the tires.
- Check the engine coolant level, hoses, and clamps.
- Check the manual transaxle fluid level.

3,000 Miles (5 000 km)

- Change the engine oil.
- Replace the engine oil filter.

6,000 Miles (10 000 km)

- Change the engine oil.
- Replace the engine oil filter.

9,000 Miles (14 000 km)

- Change the engine oil.
- Replace the engine oil filter.
- Inspect the front brake pads and rear brake linings.

12,000 Miles (19 000 km)

- Change the engine oil.
- Replace the engine oil filter.
- Inspect the front brake pads and rear brake linings.

15,000 Miles (24 000 km)

- Change the engine oil.
- Replace the engine oil filter.
- Inspect the **engine air cleaner element (filter).** Replace if necessary. See note #1 at the end of this schedule.

18,000 Miles (29 000 km)

- Change the engine oil.
- Replace the engine oil filter.

21,000 Miles (34 000 km)

- Change the engine oil.
- Replace the engine oil filter.

24,000 Miles (38 000 km)

- Change the engine oil.
- Replace the engine oil filter.
- Inspect the front brake pads and rear brake linings.

27,000 Miles (43 000 km)

- Change the engine oil.
- Replace the engine oil filter.

30,000 Miles (48 000 km)

- Change the engine oil.
- Replace the engine oil filter.
- Inspect the tie rod ends and boot seals.
- Inspect the **PCV valve** and replace if necessary. See note #1 at the end of this schedule.
- Adjust the generator drive belt tension.
- Replace the **engine air cleaner element (filter).**
- Replace the **spark plugs**

33,000 Miles (53 000 km)

- Change the engine oil.
- Replace the engine oil filter.

36,000 Miles (58 000 km)

- Change the engine oil.
- Replace the engine oil filter.
- Inspect the front brake pads and rear brake linings.

39,000 Miles (62 000 km)

- Change the engine oil.
- Replace the engine oil filter.

42,000 Miles (67 000 km)

- Change the engine oil.
- Replace the engine oil filter.

45,000 Miles (72 000 km)

- Change the engine oil.
- Replace the engine oil filter.
- Inspect the front brake pads and rear brake linings.
- Inspect the **engine air cleaner element (filter).** Replace if necessary. See note #1 at the end of this schedule.

48,000 Miles (77 000 km)

- Change the engine oil.
- Replace the engine oil filter.
- Inspect the front brake pads and rear brake linings.
- Change the automatic transaxle fluid and filter.
- Change brake fluid.

SPECIFICATIONS (Continued)

51,000 Miles (82 000 km)

- Change the engine oil.
- Replace the engine oil filter.

54,000 Miles (86 000 km)

- Change the engine oil.
- Replace the engine oil filter.

57,000 Miles (91 000 km)

- Change the engine oil.
- Replace the engine oil filter.

60,000 Miles (96 000 km)

- Change the engine oil.
- Replace the engine oil filter.
- Inspect the tie rod ends and boot seals.
- Inspect the **PCV valve** and replace if necessary. See note #1 and #2 at the end of this schedule.
- Replace the drive belts if necessary.
- Inspect the front brake pads and rear brake linings.
- Replace the **engine air cleaner element (filter).**
- Replace the **ignition cables**
- Replace the **spark plugs**

63,000 Miles (101 000 km)

- Change the engine oil.
- Replace the engine oil filter.

66,000 Miles (106 000 km)

- Change the engine oil.
- Replace the engine oil filter.

69,000 Miles (110 000 km)

- Change the engine oil.
- Replace the engine oil filter.

72,000 Miles (115 000 km)

- Change the engine oil.
- Replace the engine oil filter.
- Inspect the front brake pads and rear brake linings.

75,000 Miles (120 000 km)

- Change the engine oil.
- Replace the engine oil filter.
- Inspect the **engine air cleaner element (filter)** and replace as necessary. See note #1 at the end of this schedule.

78,000 Miles (125 000 km)

- Change the engine oil.
- Replace the engine oil filter.

81,000 Miles (130 000 km)

- Change the engine oil.
- Replace the engine oil filter.

84,000 Miles (134 000 km)

- Change the engine oil.
- Replace the engine oil filter.
- Inspect front brake pads and rear brake linings

87,000 Miles (139 000 km)

- Change the engine oil.
- Replace the engine oil filter.

90,000 Miles (144 000 km)

- Change the engine oil.
- Replace the engine oil filter.
- Inspect the tie rod ends and boot seals.
- Check the **PCV valve** and replace if necessary. See note #1 and #2 at the end of this schedule.
- Adjust the generator drive belt tension.
- Replace the **engine air cleaner element (filter).**
- Replace the **spark plugs**

93,000 Miles (149 000 km)

- Change the engine oil.
- Replace the engine oil filter.

96,000 Miles (154 000 km)

- Change the engine oil.
- Replace the engine oil filter.
- Inspect the front brake pads and rear brake linings.
- Change the automatic transaxle fluid and filter.
- Change brake fluid.

99,000 Miles (158 000 km)

- Change the engine oil.
- Replace the engine oil filter.

100,000 Miles (160 000 km)

- Flush and replace the engine coolant.

102,000 Miles (163 000 km)

- Change the engine oil.
- Replace the engine oil filter.

105,000 Miles (168 000 km)

- Change the engine oil.
- Replace the engine oil filter.
- Inspect the **engine air cleaner element (filter)** and replace if necessary. See note #1 at the end of this schedule.

108,000 Miles (173 000 km)

- Change the engine oil.
- Replace the engine oil filter.
- Inspect the front brake pads and rear brake linings.

SPECIFICATIONS (Continued)

111,000 Miles (178 000 km)

- Change the engine oil.
- Replace the engine oil filter.

114,000 Miles (182 000 km)

- Change the engine oil.
- Replace the engine oil filter.

117,000 Miles (187 000 km)

- Change the engine oil.
- Replace the engine oil filter.

120,000 Miles (192 000 km)

- Change the engine oil.
- Replace the engine oil filter.
- Replace the **engine timing belt**
- Inspect the tie rod ends and boot seals.
- Inspect the front brake pads and rear brake linings.
- Check and replace, if necessary, the **PCV valve.** See notes # 1 and # 2 at the end of this schedule.
- Replace the drive belts if necessary.
- Replace the **engine air cleaner element (filter).**
- Replace the **ignition cables.**
- Replace the **spark plugs.**

NOTE: # 1 This maintenance is recommended by DaimlerChrysler Corporation to the owner but is not required to maintain the emissions warranty.

NOTE: # 2 This maintenance is not required if the PCV valve was previously replaced.

NOTE: Operating the vehicle more than 50% in heavy traffic during hot weather, above 90°F (32°C), using vehicle for police, taxi, limousine type operation or trailer towing require the more frequent transaxle service noted in Schedule – B. Perform these services if vehicle usually operate under these conditions.

Inspection and service should also be performed anytime a malfunction is observed or suspected.

JUMP STARTING, TOWING, AND HOISTING

TABLE OF CONTENTS

	page
SERVICE PROCEDURES	
JUMP STARTING PROCEDURE	8
TOWING RECOMMENDATIONS	9
HOISTING RECOMMENDATIONS	10

SERVICE PROCEDURES

JUMP STARTING PROCEDURE

WARNING: REVIEW ALL SAFETY PRECAUTIONS AND WARNINGS IN BATTERY/STARTING/CHARGING SECTIONS. DO NOT JUMP START A FROZEN BATTERY, PERSONAL INJURY CAN RESULT. DO NOT JUMP START WHEN MAINTENANCE FREE BATTERY INDICATOR DOT IS YELLOW OR BRIGHT COLOR. DO NOT JUMP START A VEHICLE WHEN THE BATTERY FLUID IS BELOW THE TOP OF LEAD PLATES. DO NOT ALLOW JUMPER CABLE CLAMPS TO TOUCH EACH OTHER WHEN CONNECTED TO A BOOSTER SOURCE. DO NOT USE OPEN FLAME NEAR BATTERY. REMOVE METALLIC JEWELRY WORN ON HANDS OR WRISTS TO AVOID INJURY BY ACCIDENTAL ARCING OF BATTERY CURRENT. WHEN USING A HIGH OUTPUT BOOSTING DEVICE, DO NOT ALLOW BATTERY VOLTAGE TO EXCEED 16 VOLTS. REFER TO INSTRUCTIONS PROVIDED WITH DEVICE BEING USED.

CAUTION: When using another vehicle as a booster, do not allow vehicles to touch. Electrical systems can be damaged on either vehicle.

TO JUMP START A DISABLED VEHICLE:

(1) Raise hood on disabled vehicle and visually inspect engine compartment for:

- Battery cable clamp condition, clean if necessary.
- Frozen battery.
- Yellow or bright color test indicator, if equipped.
- Low battery fluid level.
- Generator drive belt condition and tension.
- Fuel fumes or leakage, correct if necessary.

CAUTION: If the cause of starting problem on disabled vehicle is severe, damage to booster vehicle charging system can result.

(2) When using another vehicle as a booster source, park the booster vehicle within cable reach. Turn off all accessories, set the parking brake, place the automatic transmission in PARK or the manual transmission in NEUTRAL and turn the ignition OFF.

(3) On disabled vehicle, place gear selector in park or neutral and set park brake. Turn off all accessories.

(4) Connect jumper cables to booster battery. RED clamp to positive terminal (+). BLACK clamp to negative terminal (-). DO NOT allow clamps at opposite end of cables to touch, electrical arc will result. Review all warnings in this procedure.

(5) On disabled vehicle, connect RED jumper cable clamp to positive (+) terminal. Connect BLACK jumper cable clamp to engine ground as close to the ground cable attaching point as possible (Fig. 1).

(6) Start the engine in the vehicle which has the booster battery, let the engine idle a few minutes, then start the engine in the vehicle with the discharged battery.

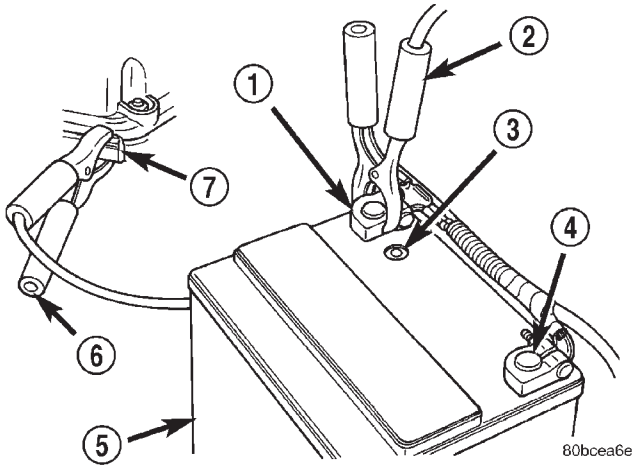

Fig. 1 Jumper Cable Clamp Connections

1 – BATTERY POSITIVE CABLE
2 – POSITIVE JUMPER CABLE
3 – TEST INDICATOR
4 – BATTERY NEGATIVE CABLE
5 – BATTERY
6 – NEGATIVE JUMPER CABLE
7 – ENGINE GROUND

SERVICE PROCEDURES (Continued)

CAUTION: Do not crank starter motor on disabled vehicle for more than 15 seconds, starter will overheat and could fail.

(7) Allow battery in disabled vehicle to charge to at least 12.4 volts (75% charge) before attempting to start engine. If engine does not start within 15 seconds, stop cranking engine and allow starter to cool (15 minutes), before cranking again.

DISCONNECT CABLE CLAMPS AS FOLLOWS:

- Disconnect BLACK cable clamp from engine ground on disabled vehicle.
- When using a Booster vehicle, disconnect BLACK cable clamp from battery negative terminal. Disconnect RED cable clamp from battery positive terminal.
- Disconnect RED cable clamp from battery positive terminal on disabled vehicle.

TOWING RECOMMENDATIONS

WARNING: DO NOT ALLOW TOWING ATTACHMENT DEVICES TO CONTACT THE FUEL TANK OR LINES, FUEL LEAK CAN RESULT. DO NOT LIFT OR TOW VEHICLE BY FRONT OR REAR BUMPER, OR BUMPER ENERGY ABSORBER UNITS. DO NOT VENTURE UNDER A LIFTED VEHICLE IF NOT SUPPORTED PROPERLY ON SAFETY STANDS. DO NOT ALLOW PASSENGERS TO RIDE IN A TOWED VEHICLE. USE A SAFETY CHAIN THAT IS INDEPENDENT FROM THE TOWING ATTACHMENT DEVICE.

CAUTION: Do not damage brake lines, exhaust system, shock absorbers, sway bars, or any other under vehicle components when attaching towing device to vehicle. Do not attach towing device to front or rear suspension components. Do not secure vehicle to towing device by the use of front or rear suspension or steering components. Remove or secure loose or protruding objects from a damaged vehicle before towing. Refer to state and local rules and regulations before towing a vehicle. Do not allow weight of towed vehicle to bear on lower fascia, air dams, or spoilers.

RECOMMENDED TOWING EQUIPMENT

To avoid damage to bumper fascia and air dams use of a wheel lift or flat bed towing device (Fig. 2) is recommended. When using a wheel lift towing device, be sure the unlifted end of disabled vehicle has at least 100 mm (4 in.) ground clearance. If minimum ground clearance cannot be reached, use a towing dolly. If a flat bed device is used, the approach angle should not exceed 15 degrees.

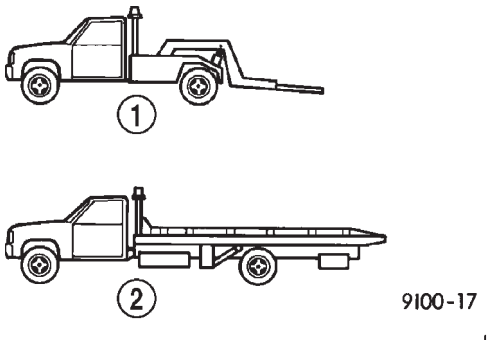

Fig. 2 Recommended Towing Devices

1 – WHEEL LIFT
2 – FLAT BED

GROUND CLEARANCE

CAUTION: If vehicle is towed with wheels removed, install lug nuts to retain brake drums or rotors.

A towed vehicle should be raised until lifted wheels are a minimum 100 mm (4 in) from the ground. Be sure there is adequate ground clearance at the opposite end of the vehicle, especially when towing over rough terrain or steep rises in the road. If necessary, remove the wheels from the lifted end of the vehicle and lower the vehicle closer to the ground, to increase the ground clearance at the opposite end of the vehicle. Install lug nuts on wheel attaching studs to retain brake drums or rotors.

LOCKED VEHICLE TOWING

When a locked vehicle must be towed with the front wheels on the ground, use a towing dolly or flat bed hauler.

FLAT TOWING WITH TOW BAR

- 4-speed automatic transaxle vehicles can be flat towed at speeds not to exceed 72 km/h (44 mph) for not more than 160 km (100 miles). The steering column must be unlocked and the gear selector must be in the neutral position.
- 5-speed manual transaxle vehicles can be flat towed at any legal highway speed for extended distances. The steering column must be unlocked and the gear selector must be in the neutral position.

TOWING – FRONT WHEEL LIFT

DaimlerChrysler Corporation recommends that a vehicle be towed with the front end lifted, whenever possible.

TOWING – REAR WHEEL LIFT

If a vehicle cannot be towed with the front wheels lifted, the rear wheels can be lifted provided the following guide lines are observed.

SERVICE PROCEDURES (Continued)

CAUTION: Do not use steering column lock to secure steering wheel during towing operation.

- Unlock steering column and secure steering wheel in straight ahead position with a clamp device designed for towing.
- Verify that front drive line and steering components are in good condition.
- 4-speed automatic transaxle vehicles can be towed at speeds not to exceed 72 km/h (44 mph) for not more than 160 km (100 miles). The steering column must be unlocked and the gear selector must be in the neutral position.
- 5-speed manual transaxle vehicles can be towed at any legal highway speed for extended distances. The gear selector must be in the neutral position. The steering column must be unlocked and the gear selector must be in the neutral position.

HOISTING RECOMMENDATIONS

Refer to Owner's Manual provided with vehicle for proper emergency jacking procedures.

WARNING: THE HOISTING AND JACK LIFTING POINTS PROVIDED ARE FOR A COMPLETE VEHICLE. WHEN THE ENGINE OR REAR SUSPENSION IS REMOVED FROM A VEHICLE, THE CENTER OF GRAVITY IS ALTERED MAKING SOME HOISTING CONDITIONS UNSTABLE. PROPERLY SUPPORT OR SECURE VEHICLE TO HOISTING DEVICE WHEN THESE CONDITIONS EXIST.

CAUTION: Do not position hoisting device on suspension components, damage to vehicle can result.

Do not attempt to raise one entire side of the vehicle by placing a floor jack midway between the front and rear wheels. This practice may result in permanent damage to the body.

FLOOR JACK

When properly positioned, a floor jack can be used to lift a PT vehicle (Fig. 3). Support the vehicle in the raised position with jack stands.

A floor jack or any lifting device, must never be used on any part of the underbody other then the described areas.

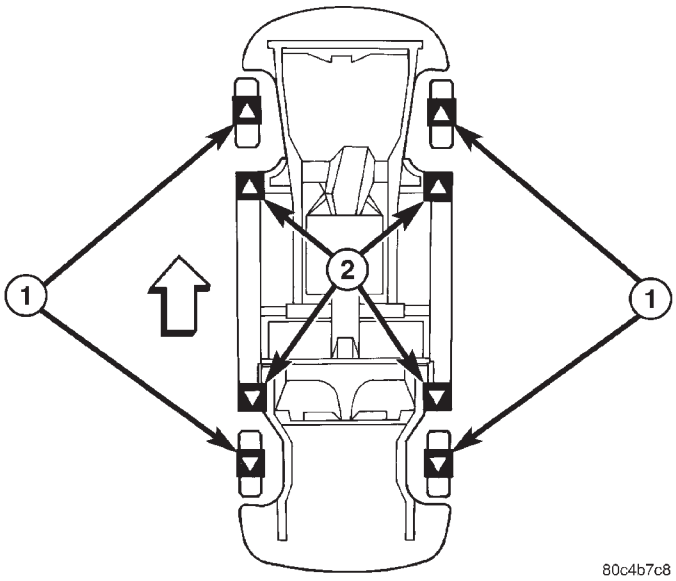

Fig. 3 Hoisting and Jacking Points

1. Drive On Lift
2. Frame Contract Lift (Single Post)
2. Chassis Lift (Dual Post)
2. Outboard Lift (Dual Post)
2. Floor Jack

HOIST

A vehicle can be lifted with:

- A single-post, frame-contact hoist.
- A twin-post, chassis hoist.
- A ramp-type, drive-on hoist.

NOTE: When a frame-contact type hoist is used, verify that the lifting pads are positioned properly (Fig. 3).

SUSPENSION

TABLE OF CONTENTS

page

WHEEL ALIGNMENT 1
FRONT SUSPENSION 11
REAR SUSPENSION 37

WHEEL ALIGNMENT

TABLE OF CONTENTS

page

DESCRIPTION AND OPERATION
WHEEL ALIGNMENT 1
DIAGNOSIS AND TESTING
SUSPENSION AND STEERING DIAGNOSIS 5
SERVICE PROCEDURES
CURB HEIGHT MEASUREMENT 7
WHEEL ALIGNMENT 7
SPECIFICATIONS
WHEEL ALIGNMENT 10

DESCRIPTION AND OPERATION

WHEEL ALIGNMENT

DESCRIPTION

Vehicle wheel alignment is the positioning of all interrelated front and rear suspension angles. These angles affect the handling and steering of the vehicle when it is in motion. Proper wheel alignment is essential for efficient steering, good directional stability, and proper tire wear.

The method of checking a vehicle's front and rear wheel alignment varies depending on the manufacturer and type of equipment used. The manufacturer's instructions should always be followed to ensure accuracy of the alignment, except when DaimlerChrysler Corporation's wheel alignment specifications differ.

On this vehicle, the suspension angles that can be adjusted are as follows:

- Front
  - Camber
  - Toe
- Rear
  - Camber
  - Toe

Check the wheel alignment and make all wheel alignment adjustments with the vehicle standing at its proper curb height specification. Curb height is the normal riding height of the vehicle. It is measured from a certain point on the vehicle to the ground or a designated area while the vehicle is sitting on a flat, level surface. Refer to Curb Height Measurement in this section for additional information.

Typical wheel alignment angles and measurements are described in the following paragraphs.

CAMBER

Camber is the inward or outward tilt of the top of the tire and wheel assembly (Fig. 1). Camber is measured in degrees of angle relative to a true vertical line. Camber is a tire wearing angle.

- Excessive negative camber will cause tread wear at the inside of the tire.
- Excessive positive camber will cause tread wear on the outside of the tire.

DESCRIPTION AND OPERATION (Continued)

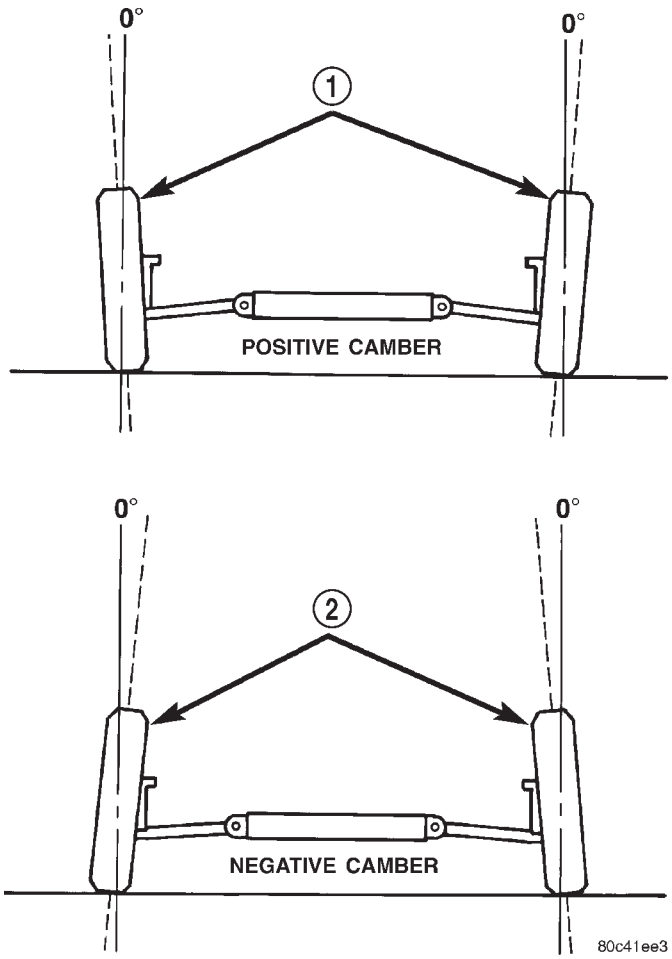

Fig. 1 Camber

1 – WHEELS TILTED OUT AT TOP
2 – WHEELS TILTED IN AT TOP

CROSS CAMBER

Cross camber is the difference between left and right camber. To achieve the cross camber reading, subtract the right side camber reading from the left. For example, if the left camber is +0.3° and the right camber is 0.0°, the cross camber would be +0.3°.

CASTER

Caster is the forward or rearward tilt of the steering knuckle in reference to the position of the upper and lower ball joints. Caster is measured in degrees of angle relative to a true vertical center line. This line is viewed from the side of the tire and wheel assembly (Fig. 2).

- Forward tilt (upper ball joint ahead of lower) results in a negative caster angle.
- Rearward tilt (upper ball joint trailing lower) results in a positive caster angle.

Although caster does not affect tire wear, a caster imbalance between the two front wheels may cause the vehicle to lead to the side with the least positive caster.

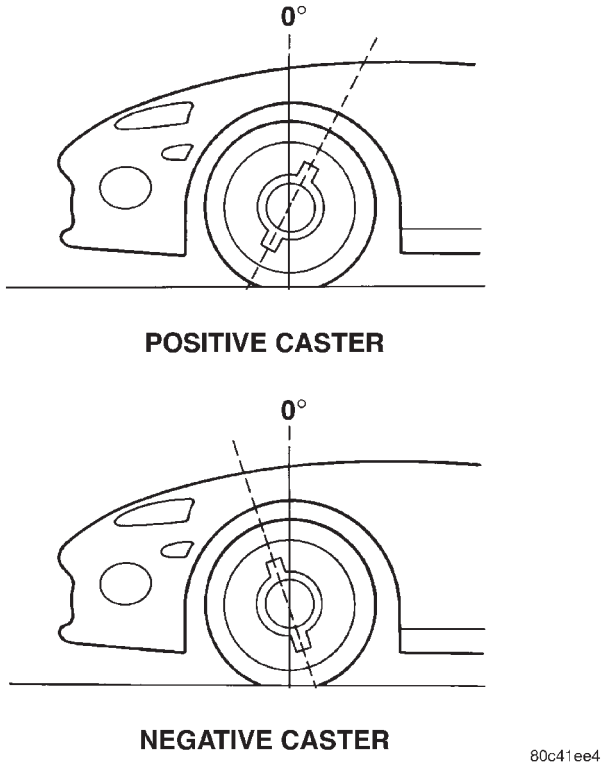

Fig. 2 Caster

CROSS CASTER

Cross caster is the difference between left and right caster.

TOE

Toe is the inward or outward angle of the wheels as viewed from above the vehicle (Fig. 3).

- Toe-in is produced when the front edges of the wheels on the same axle are closer together than the rear edges.
- Toe-out is produced when the front edges of the wheels on the same axle are farther apart than the rear edges.

Toe-in and toe-out can occur at the front wheels and the rear wheels.

DESCRIPTION AND OPERATION (Continued)

Toe is measured in degrees or inches. The measurement identifies the amount that the front of the wheels point inward (toe-in) or outward (toe-out). Toe is measured at the spindle height. Zero toe means the front and rear edges of the wheels on the same axle are equally distant.

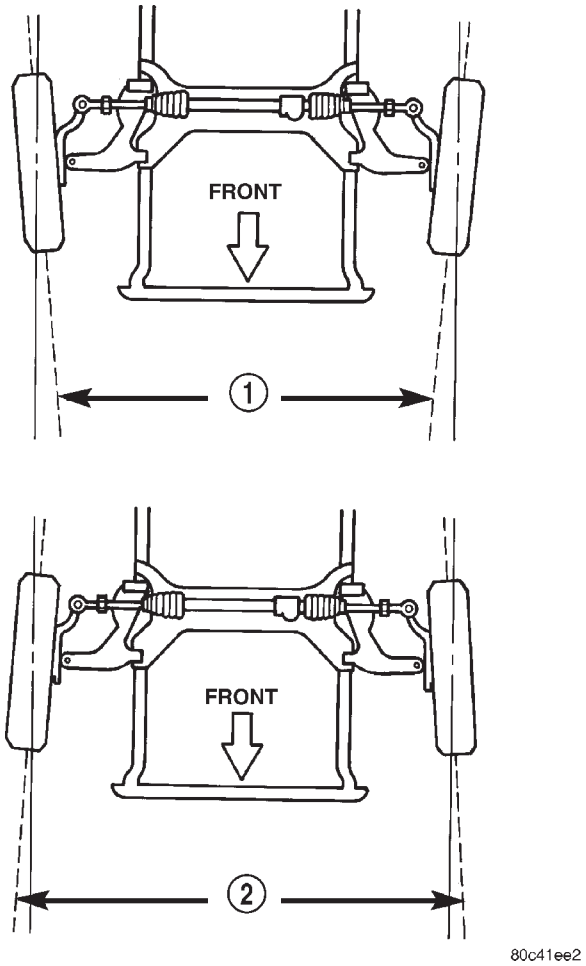

Fig. 3 Toe

1 – TOE-IN
2 – TOE-OUT

TOE-OUT ON TURNS

Toe-out on turns is the relative positioning of the front wheels while steering through a turn (Fig. 4). This compensates for each front wheel's turning radius. As the vehicle encounters a turn, the outboard wheel must travel in a larger radius circle than the inboard wheel. The steering system is designed to make each wheel follow its particular radius circle. To accomplish this, the front wheels must progressively toe outward as the steering is turned from center. This eliminates tire scrubbing and undue tire wear when steering a vehicle through a turn.

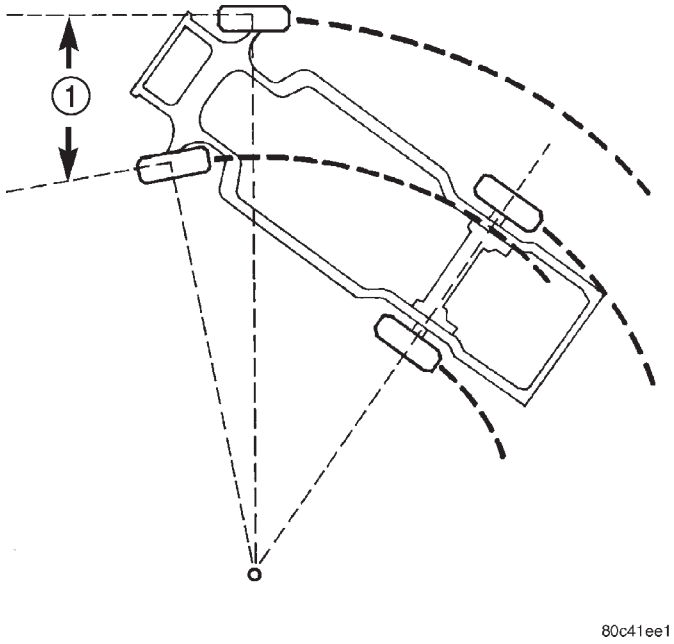

Fig. 4 Toe-Out On Turns

1 – TOE-OUT ON TURNS

DYNAMIC TOE PATTERN

Dynamic toe pattern is the inward and outward toe movement of the front and rear tires through the suspension's jounce and rebound travel. As the vehicle's suspension moves up and down, the toe pattern varies. Toe pattern is critical in controlling the directional stability of the vehicle while in motion. Front and rear dynamic toe pattern is preset by the factory at the time the vehicle is assembled.

It is not necessary to check or adjust front or rear dynamic toe pattern when doing a normal wheel alignment. The only time dynamic toe pattern needs to be checked or adjusted is if the frame of the vehicle has been damaged.

DESCRIPTION AND OPERATION (Continued)

STEERING AXIS INCLINATION (S.A.I.)

Steering axis inclination is the angle between a true vertical line starting at the center of the tire at the road contact point and a line drawn through the center of the upper ball joint (or strut) and the lower ball joint (Fig. 5). S.A.I. is built into the vehicle and is not an adjustable angle. If S.A.I. is not within specifications, a bent or damaged suspension component may be the cause.

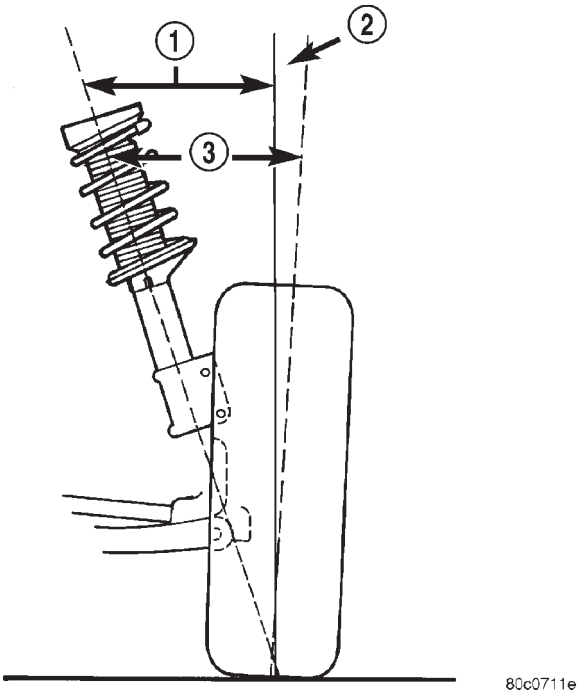

Fig. 5 S.A.I. and I.A.

1 – S.A.I.
2 – CAMBER
3 – I.A.

INCLUDED ANGLE (I.A.)

Included angle is the sum of the S.A.I. angle plus or minus the camber angle, depending on whether or not the wheel has positive or negative camber (Fig. 5). If camber is positive, add the camber angle to the S.A.I angle. If camber is negative, subtract the camber angle from the S.A.I. angle. Included angle is not adjustable, but can be used to diagnose a frame misalignment or bent suspension component (spindle, strut).

THRUST ANGLE

Thrust angle is the averaged direction the rear wheels are pointing in relation to the vehicle's center line (Fig. 6). The presence of negative or positive thrust angle causes the rear tires to track improperly to the left or right of the front tires (dog tracking).

- Negative thrust angle means the rear tires are tracking to the left of the front tires.
- Positive thrust angle means the rear tires are tracking to the right of the front tires.

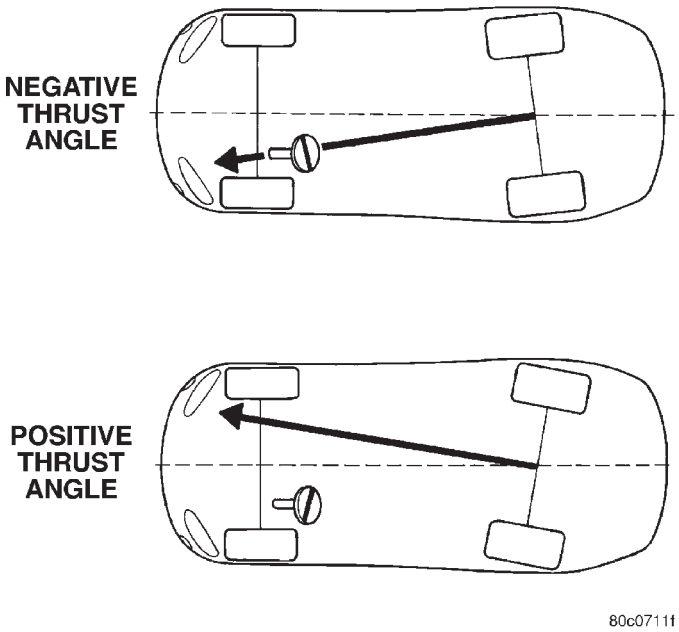

Fig. 6 Thrust Angle

Improper tracking can cause undue tire wear, a lead or pull and a crooked steering wheel. Excessive thrust angle can usually be corrected by adjusting the rear wheel toe so that each wheel has one-half of the total toe measurement.

DIAGNOSIS AND TESTING

SUSPENSION AND STEERING DIAGNOSIS

CONDITION	POSSIBLE CAUSES	POTENTIAL CORRECTIONS
Front End Whine On Turns	1. Defective Wheel Bearing 2. Incorrect Wheel Alignment 3. Worn Tires	1. Replace Wheel Bearing 2. Check And Reset Wheel Alignment 3. Replace Tires
Front End Growl Or Grinding On Turns	1. Defective Wheel Bearing 2. Engine Mount Grounding Against Frame Or Body Of Vehicle. 3. Worn Or Broken C/V Joint 4. Loose Wheel Lug Nuts 5. Incorrect Wheel Alignment 6. Worn Tires	1. Replace Wheel Bearing 2. Check For Motor Mount Hitting Frame Rail And Reposition Engine As Required 3. Replace C/V Joint 4. Verify Wheel Lug Nut Torque 5. Check And Reset Wheel Alignment 6. Replace Tires
Front End Clunk Or Snap On Turns	1. Loose Wheel Lug Nuts 2. Worn Or Broken C/V Joint 3. Worn Or Loose Tie Rod Or Ball Joint 4. Worn Control Arm Bushing 5. Loose Sway Bar Or Upper Strut Attachment	1. Verify Wheel Lug Nut Torque 2. Replace C/V Joint 3. Tighten Or Replace Tie Rod End Or Ball Joint 4. Replace Control Arm Bushing 5. Tighten Sway Bar Or Upper Strut Attachment To Specified Torque
Front End Whine With Vehicle Going Straight At A Constant Speed	1. Defective Wheel Bearing 2. Incorrect Wheel Alignment 3. Worn Tires	1. Replace Wheel Bearing 2. Check And Reset Wheel Alignment 3. Replace Tires
Front End Growl Or Grinding With Vehicle Going Straight At A Constant Speed	1. Engine Mount Grounding 2. Worn Or Broken C/V Joint	1. Reposition Engine As Required 2. Replace C/V Joint
Front End Whine When Accelerating Or Decelerating	1. Worn Or Defective Transaxle Gears Or Bearings	1. Replace Transaxle Gears Or Bearings
Front End Clunk When Accelerating Or Decelerating	1. Worn Or Broken Engine Mount 2. Worn Or Defective Transaxle Gears Or Bearings 3. Loose Wheel Lug Nuts 4. Worn Or Broken C/V Joint 5. Worn Or Loose Ball Joint	1. Replace Engine Mount 2. Replace Transaxle Gears Or Bearings 3. Verify Wheel Lug Nut Torque 4. Replace C/V Joint 5. Tighten Or Replace Ball Joint

DIAGNOSIS AND TESTING (Continued)

CONDITION	POSSIBLE CAUSES	POTENTIAL CORRECTIONS
	6. Worn Or Loose Control Arm Bushing	6. Tighten To Specified Torque Or Replace Control Arm Bushing
	7. Loose Crossmember Bolts	7. Tighten Crossmember Bolts To Specified Torque
Road Wander	1. Incorrect Tire Pressure	1. Inflate Tires To Rcommended Pressure
	2. Incorrect Front Or Rear Wheel Toe	2. Check And Reset Front Wheel Toe
	3. Worn Wheel Bearings	3. Replace Wheel Bearing
	4. Worn Control Arm Bushings	4. Replace Control Arm Bushing
	5. Excessive Friction In Steering Gear	5. Replace Steering Gear
	6. Excessive Friction In Steering Shaft Coupling	6. Replace Steering Coupler
	7. Excessive Friction In Strut Upper Bearing	7. Replace Strut Bearing
Lateral Pull	1. Unequal Tire Pressure	1. Inflate All Tires To Recommended Pressure
	2. Radial Tire Lead	2. Perform Lead Correction Procedure
	3. Incorrect Front Wheel Camber	3. Check And Reset Front Wheel Camber
	4. Power Steering Gear Imbalance	4. Replace Power Steering Gear
	5. Wheel Braking	5. Correct Braking Condition Causing Lateral Pull
Excessive Steering Free Play	1. Incorrect Steering Gear Adjustment	1. Adjust Or Replace Steering Gear
	2. Worn Or Loose Tie Rod Ends	2. Replace Or Tighten Tie Rod Ends
	3. Loose Steering Gear Mounting Bolts	3. Tighten Steering Gear Bolts To The Specified Torque
	4. Loose Or Worn Steering Shaft Coupler	5. Replace Steering Shaft Coupler
Excessive Steering Effort	1. Low Tire Pressure	1. Inflate All Tires To Recommended Pressure
	2. Lack Of Lubricant In Steering Gear	2. Replace Steering Gear
	3. Low Power Steering Fluid Level	3. Fill Power Steering Fluid Reservoir To Correct Level
	4. Loose Power Steering Pump Belt	4. Check and replace automatic belt tensioner as necessary. If drive belt is worn or glazed, replace belt.
	5. Lack Of Lubricant In Steering Ball Joints	5. Lubricate Or Replace Steering Ball Joints
	6. Steering Gear Malfunction	6. Replace Steering Gear
	7. Lack Of Lubricant In Steering Coupler	7. Replace Steering Coupler

SERVICE PROCEDURES

CURB HEIGHT MEASUREMENT

The wheel alignment is to be checked and all alignment adjustments made with the vehicle at its required curb height specification.

Vehicle height is to be checked with the vehicle on a flat, level surface, preferably a vehicle alignment rack. The tires are to be inflated to the recommended pressure. All tires are to be the same size as standard equipment. Vehicle height is checked with the fuel tank full of fuel, and no passenger or luggage compartment load.

Vehicle height is not adjustable. If the measurement is not within specifications, inspect the vehicle for bent or weak suspension components. Compare the parts tag on the suspect coil spring(s) to the parts book and the vehicle sales code, checking for a match. Once removed from the vehicle, compare the coil spring height to a correct new or known good coil spring. The heights should vary if the suspect spring is weak.

NOTE: Prior to reading the curb height measurement, the front an rear of the vehicle should be jounced. Induce jounce by grasping the center of the rear, then front bumper (or fascia) and jouncing the vehicle an equal number of times. Release the bumper at the bottom of the jounce cycle.

(1) Measure from the edge of the wheel opening fender lip directly above the wheel center (spindle) down to the floor or alignment rack surface.

(2) When measuring, maximum left-to-right differential is not to exceed 10 mm (0.39 in.).

(3) Compare the measurements to specifications listed in the following CURB HEIGHT SPECIFICATIONS chart.

CURB HEIGHT SPECIFICATIONS

VEHICLE	FRONT	REAR
ALL	695 mm ± 8 mm 27.37 in. ± 0.32 in.	716 mm ± 8 mm 28.27 in. ± 0.32 in.

WHEEL ALIGNMENT

PRE-WHEEL ALIGNMENT VEHICLE INSPECTION

CAUTION: If during the inspection the front suspension crossmember shows any sign of impact damage, the steering column lower coupling must be inspected. Refer to DIAGNOSIS AND TESTING in the STEERING group in this service manual.

Before any attempt is made to change or correct the wheel alignment, the following inspection and necessary corrections must be made to the vehicle to ensure proper alignment.

(1) Be sure the fuel tank is full of fuel. If the fuel tank is not full, the reduction in weight will affect the curb height of the vehicle and the alignment specifications.

(2) The passenger and luggage compartments of the vehicle should be free of any load that is not factory equipment.

(3) Check the tires on the vehicle. The tires are to be inflated to the recommended air pressure. All tires must be the same size and in good condition with approximately the same tread wear.

(4) Check the front tire and wheel assemblies for excessive radial runout.

(5) Inspect all suspension component fasteners for looseness and proper torque.

(6) Inspect the lower front ball joints and all steering linkage for looseness and any sign of wear or damage.

(7) Inspect the rubber bushings on all the suspension components for signs of wear or deterioration. If any bushings show signs of wear or deterioration, they should be replaced prior to aligning the vehicle.

(8) Check vehicle curb height to verify it is within specifications. Refer to CURB HEIGHT MEASUREMENT in this section.

WHEEL ALIGNMENT SETUP

(1) Position the vehicle on an alignment rack.

(2) Install all required alignment equipment on the vehicle, per the alignment equipment manufacturer's instructions. On this vehicle, a four-wheel alignment is recommended.

NOTE: Prior to reading the vehicle's alignment readouts, the front and rear of vehicle should be jounced. Induce jounce (rear first, then front) by grasping the center of the bumper and jouncing each end of vehicle an equal number of times. The bumper should always be released when vehicle is at the bottom of the jounce cycle.

SERVICE PROCEDURES (Continued)

(3) Read the vehicle's current front and rear alignment settings. Compare the vehicle's current alignment settings to the vehicle specifications for camber, caster and toe-in. Refer to WHEEL ALIGNMENT SPECIFICATIONS in this section.

REAR CAMBER AND TOE

Rear camber and rear toe settings on this vehicle are determined at the time the vehicle is designed, by the location of the vehicle's suspension components. This is referred to as Net Build. The result is no required adjustment of camber and toe after the vehicle is built or when servicing the suspension components. Thus, when performing a wheel alignment, rear camber and toe are not normally considered adjustable angles. Although not normally considered adjustable, rear camber and toe can be changed when necessary through the use of specially designed shims. To install shims, use the following procedure.

(1) Raise the vehicle until its tires are off the floor or alignment rack.

(2) Remove the tire and wheel assembly.

(3) Access the spindle mounting bolts following the Removal procedure found in Spindle in the Rear Suspension section.

(4) Loosen the four spindle mounting bolts just enough to slide the adjustment shim in between the spindle and the axle mounting flange.

NOTE: Each shim is 0.010 in. (0.254 mm) thick. Do not place more than two shims at any one spindle.

(5) Hook the shim on the mounting bolts utilizing the slots cut into the shim. Refer to the following list for shim placement:

- To achieve more positive camber, place the shim across the two upper mounting bolts.
- To achieve more negative camber, place the shim across the two lower mounting bolts.
- To achieve more positive toe, place the shim across the two rearward mounting bolts.
- To achieve more negative toe, place the shim across the two forward mounting bolts.

(6) Tighten the four mounting bolts to a torque of 95 N·m (70 ft. lbs.).

(7) Reassemble the rear brake following the Installation procedure found in Spindle in the Rear Suspension section.

(8) Reinstall the tire and wheel assembly. Tighten the wheel mounting nuts to a torque of 135 N·m (100 ft. lbs.).

(9) Lower the vehicle.

(10) Once rear camber and toe have been set to specifications, check and adjust the front wheel alignment as necessary. Refer to FRONT CAMBER AND CASTER and FRONT TOE within this wheel alignment service procedure.

FRONT CAMBER AND CASTER

Front camber and caster settings on this vehicle are determined at the time the vehicle is designed, by the location of the vehicle's suspension components. This is referred to as Net Build. The result is no required adjustment of camber and caster after the vehicle is built or when servicing the suspension components. Thus, when performing a wheel alignment, caster and camber are not normally considered adjustable angles. Camber and caster should be checked to ensure they meet vehicle specifications.

If front camber is found not to meet alignment specifications, it can be adjusted using an available camber adjustment bolt package. Before installing a camber adjustment bolt package on a vehicle found to be outside the specifications, inspect the suspension components for any signs of damage or bending.

No adjustment can be made to the caster setting on this vehicle. If the vehicle's caster is not within alignment specifications, check for damaged suspension components or body parts.

CAUTION: Do not attempt to adjust the vehicles wheel alignment by heating or bending any of the suspension components.

CAMBER ADJUSTMENT BOLT PACKAGE INSTALLATION

The camber adjustment bolt package contains new bolts and nuts for attaching the strut clevis bracket to the steering knuckle. The bolts contained in the package are slightly undersize allowing for movement between the strut clevis bracket and the steering knuckle. The movement allowed by the undersize bolts provide approximately two degrees of camber adjustment per side of the vehicle. To install and adjust the camber adjustment bolt package, follow the procedure below.

(1) Raise the vehicle until its tires are not supporting the weight of the vehicle.

CAUTION: The knuckle to strut assembly attaching bolt shanks are serrated and must not be turned during removal. Remove the nuts while holding the bolts stationary.

(2) Remove the original upper bolt attaching the strut clevis bracket to the knuckle (Fig. 7).

(3) Install a bolt from the adjustment package into the hole where the original bolt was removed. Install the bolt from the rear.

(4) Install a nut provided in adjustment package on the replacement bolt. Tighten the nut until it's

SERVICE PROCEDURES (Continued)

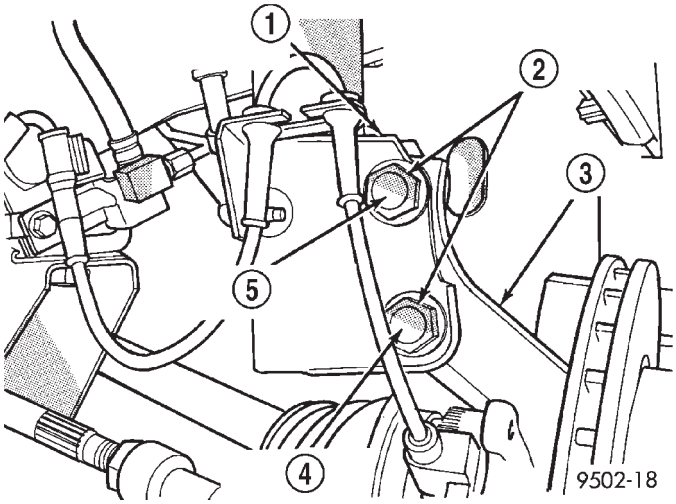

Fig. 7 Front Strut Clevis Bracket Attaching Bolts

1 – STRUT CLEVIS BRACKET
2 – STRUT CLEVIS BRACKET TO STEERING KNUCKLE ATTACHING BOLTS
3 – STEERING KNUCKLE
4 – LOOSEN THIS BOLT
5 – REMOVE AND REPLACE THIS BOLT

snug, but still allowing the knuckle to slide in the clevis bracket.

(5) Remove the original lower bolt.

(6) Install a bolt from the adjustment package into the bottom hole of the strut clevis bracket. Install the bolt from the rear.

(7) Install a nut provided in adjustment package on the replacement bolt. Tighten the nut until it's snug.

(8) Reinstall the tire and wheel assembly. Tighten the wheel mounting nuts to a torque of 135 N·m (100 ft. lbs.)

(9) Perform the above procedure to any of the remaining strut as required.

(10) Lower the vehicle and jounce the front and rear of the vehicle.

(11) Adjust the front camber to the preferred setting by pushing or pulling on the top of the tire. When camber is set to specifications, tighten the upper and lower strut clevis bracket bolts. Again jounce the front and rear of the vehicle, then verify the camber settings.

(12) Torque front strut clevis bracket-to-steering knuckle attaching bolts to 53 N·m (40 ft. lbs.), plus an additional 1/4 turn after the torque is met.

(13) Once camber is within specifications, adjust toe to meet the preferred specification setting. Refer to FRONT TOE within this wheel alignment service procedure.

FRONT TOE

(1) Center the steering wheel and lock it in place using a steering wheel clamp.

CAUTION: Do not twist the inner tie rod-to-steering gear rubber boots while turning the inner tie rod during the front toe adjustment.

(2) Loosen the tie rod adjusting jam nuts (Fig. 8). Grasp each inner tie rod at its splines and rotate it one way or the other until the front wheel toe is set to the preferred specification. Refer to WHEEL ALIGNMENT SPECIFICATIONS in this section.

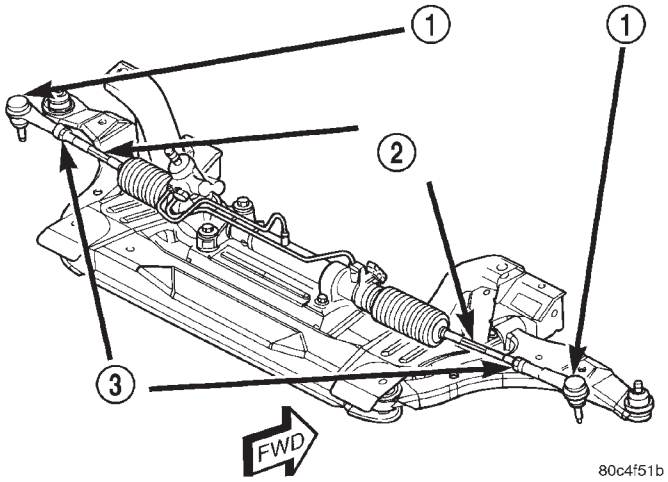

Fig. 8 Jam Nuts

1 – OUTER TIE ROD
2 – INNER TIE ROD SPLINES
3 – JAM NUT

(3) Tighten tie rod adjusting jam nuts to a torque of 75 N·m (55 ft. lbs.).

(4) Make sure the inner tie rod-to-steering gear rubber boots are not twisted. If twisted, loosen the boot clamp at the inner tie rod and move the boot as necessary.

(5) Remove steering wheel clamp.

(6) Remove the alignment equipment.

(7) Road test the vehicle to verify the steering wheel is straight and the vehicle does not pull or wander.

2001 PT Service Manual
Publication No. 81-370-1111
TSB 26-05-00 May, 2000

SPECIFICATIONS

WHEEL ALIGNMENT

NOTE: All wheel alignments are to be set with the vehicle at curb height. Refer to CURB HEIGHT MEASUREMENT in SERVICE PROCEDURES.

NOTE: All specifications are given in degrees.

FRONT WHEEL ALIGNMENT	PREFERRED SETTING	ACCEPTABLE RANGE
CAMBER	0.00°	-0.40° to +0.40°
Cross Camber (Maximum Side-To-Side Difference)	0.00°	0.50
CASTER	+2.45°	+1.45° to +3.45°
Cross Caster (Maximum Side-To-Side Difference)	0.00°	1.00°
TOTAL TOE*	+0.10°	0.00° to +0.20°
REAR WHEEL ALIGNMENT	**PREFERRED SETTING**	**ACCEPTABLE RANGE**
CAMBER	0.00°	-0.25° to +0.25°
TOTAL TOE*	+0.20°	+0.00° to +0.40°
THRUST ANGLE	0.00°	-0.30° to +0.30°

Note:

* TOTAL TOE is the sum of both the left and right wheel toe settings. TOTAL TOE must be equally split between each front wheel to ensure the steering wheel is centered after setting toe. Positive toe (+) is toe-in and negative toe (−) is Toe-out.

FRONT SUSPENSION

TABLE OF CONTENTS

page

DESCRIPTION AND OPERATION
FRONT SUSPENSION SYSTEM 11
STRUT ASSEMBLY (FRONT) 11
STEERING KNUCKLE 13
LOWER CONTROL ARM 13
STABILIZER BAR (FRONT) 14
DIAGNOSIS AND TESTING
SUSPENSION AND STEERING DIAGNOSIS 14
STRUT ASSEMBLY (FRONT) 16
STEERING KNUCKLE 17
WHEEL BEARING AND HUB 17
LOWER CONTROL ARM 17
LOWER CONTROL ARM BALL JOINT 17
STABILIZER BAR (FRONT) 18
SERVICE PROCEDURES
LUBRICATION 18
REMOVAL AND INSTALLATION
SERVICE WARNINGS AND CAUTIONS 18
STRUT ASSEMBLY (FRONT) 18
STEERING KNUCKLE 19
LOWER CONTROL ARM 22
STABILIZER BAR (FRONT) 24
WHEEL MOUNTING STUD (FRONT) 25
DISASSEMBLY AND ASSEMBLY
STRUT ASSEMBLY (FRONT) 26
STEERING KNUCKLE (WHEEL BEARING AND HUB). 28
LOWER CONTROL ARM (BALL JOINT) 31
LOWER CONTROL ARM (REAR ISOLATOR BUSHING). 33
SPECIFICATIONS
FRONT SUSPENSION FASTENER TORQUE 35
SPECIAL TOOLS
FRONT SUSPENSION 35

DESCRIPTION AND OPERATION

FRONT SUSPENSION SYSTEM

DESCRIPTION

This vehicle has a gas pressurized MacPherson strut type front suspension design (Fig. 1).

The front suspension consists of these major components:

- Lower control arm (2)
- Stabilizer bar
- Steering knuckle (2)
- Strut assembly (2)
- Wheel bearing and hub (pressed into steering knuckle)

Refer to individual components for additional information.

OPERATION

The front suspension allows each front wheel on a vehicle to adapt to different road surfaces and conditions without greatly affecting the opposite wheel and the ability to control the vehicle. Each side of the front suspension is allowed to pivot so the vehicle can be steered in the direction preferred.

Refer to individual components for additional information.

STRUT ASSEMBLY (FRONT)

DESCRIPTION

A Macpherson type design strut assembly is used in place of the front suspension upper control arm and upper ball joint (Fig. 1). The bottom of the strut mounts directly to the steering knuckle using 2 attaching bolts and nuts going through the strut clevis bracket and steering knuckle. The top of the strut mounts directly to the strut tower of the vehicle using the three threaded studs on the strut assemblies upper mount.

The strut assembly includes the following components (Fig. 1) :

- Upper mount (rubber isolated)
- Upper spring seat and bearing
- Dust shield
- Jounce bumper
- Coil spring
- Lower spring isolator
- Strut (damper)

Each component is serviced by removing the strut assembly from the vehicle and disassembling it.

Coil springs are rated separately for each corner or side of the vehicle depending on optional equipment and type of vehicle service. If a coil spring requires replacement, be sure that it is replaced with a spring meeting the correct load rating for the vehicle and its specific options.

DESCRIPTION AND OPERATION (Continued)

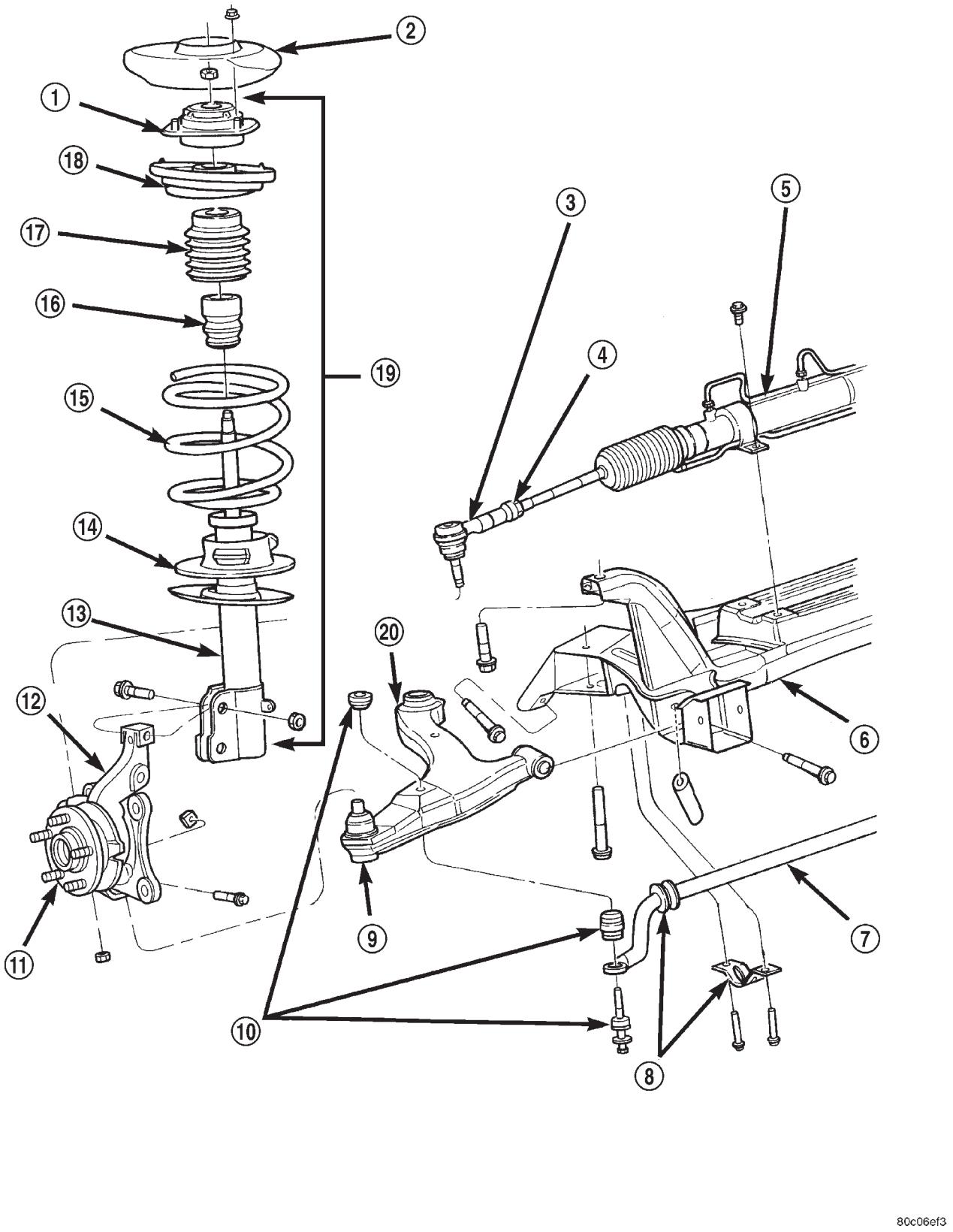

Fig. 1 Front Suspension System

DESCRIPTION AND OPERATION (Continued)

1 – UPPER MOUNT
2 – VEHICLE STRUT TOWER
3 – OUTER TIE ROD
4 – JAM NUT
5 – STEERING GEAR
6 – CROSSMEMBER
7 – STABILIZER BAR
8 – STABILIZER BAR CUSHION AND RETAINER
9 – BALL JOINT
10 – STABILIZER BAR LINK
11 – HUB
12 – KNUCKLE
13 – STRUT
14 – LOWER SPRING ISOLATOR
15 – COIL SPRING
16 – JOUNCE BUMPER
17 – DUST SHIELD
18 – SPRING SEAT AND BEARING
19 – STRUT ASSEMBLY
20 – LOWER CONTROL ARM

OPERATION

The strut assembly is used to dampen the front suspension and smooth the ride of the vehicle.

During steering maneuvers, the strut assembly and steering knuckle turn as an assembly.

The upper mount is attached to the strut rod and stays stationary with the body of the vehicle whether the strut remains straight or turns with the steering knuckle when the steering gear turns it.

The upper spring seat and bearing controls upper containment of the coil spring. Its bearing allows the upper mount to pivot smoothly.

(1) The jounce bumper limits suspension travel and metal-to-metal contact under full jounce conditions.

The coil spring controls ride quality and maintains proper ride height.

The lower spring isolator isolates the coil spring from coming into metal-to-metal contact with the strut.

The strut dampens jounce and rebound motions of the coil spring and suspension.

STEERING KNUCKLE

DESCRIPTION

The steering knuckle is a single casting with legs machined for attachment to the front strut assembly on the top, lower control arm ball joint on the bottom, and steering linkage on the trailing end (Fig. 1). The steering knuckle also has two machined, drilled and tapped legs on the leading end casting to support and align the front disc brake caliper adapter.

The knuckle supports the wheel bearing and hub (Fig. 1). The wheel hub is pressed into a sealed-for-life wheel bearing that is pressed into the steering knuckle. A retainer plate also holds the bearing in place. The hub supports the driveshaft outer constant velocity (C/V) joint. Each is splined and meshes in the center of the hub. The outer C/V joint is retained to the hub using a nut. The nut is locked to the outer C/V stub shaft using a nut retainer and cotter pin.

The wheel bearing is a Unit 1 type cartridge bearing that requires no maintenance. The wheel bearing can be serviced separately from the hub.

The hub has five studs pressed into its flange.

OPERATION

The steering knuckle pivots with the strut assembly between the lower ball joint and the pivot bearing in the strut assembly. The steering gear outer tie rod end connects to the trailing end of each knuckle, allowing the vehicle to be steered.

The center of the knuckle supports the hub, wheel bearing and axle shaft.

The hub and wheel bearing work together. The wheel bearing has internal bearings that allow the hub to rotate with the driveshaft and the tire and wheel assembly. The hub's five studs mount the tire and wheel to the vehicle.

LOWER CONTROL ARM

DESCRIPTION

There is one lower control arm on each side of the vehicle. Each lower control arm is a stamped steel unit using rubber isolated pivot bushings to isolate it from the front suspension crossmember and frame of the vehicle (Fig. 1). The rear bushing can be serviced separately.

The front of the lower control arm is bolted to the front crossmember using a bolt through the center of the rubber pivot bushing. The rear of the lower control arm is mounted to both the front crossmember and the frame rail of the vehicle using a thru-bolt. The thru-bolt goes through both the crossmember and rear lower control arm bushing, threading directly into a caged nut in the frame rail of the vehicle.

The left and right lower control arms are interconnected through a linked rubber isolated stabilizer bar.

The outboard end of each lower control arm connects to the steering knuckle using a ball joint.

The lower control arm connects to the steering knuckle through a ball joint mounted at the outboard end of the arm (Fig. 1). The ball joint is pressed into the lower control arm and has a non-tapered stud with a notch for steering knuckle pinch bolt clear-

DESCRIPTION AND OPERATION (Continued)

ance. The ball joint stud is clamped and locked to the steering knuckle lower leg using a pinch bolt.

The ball joint is lubricated for life during the manufacturing process. Once lubricated for life, the grease fitting head is snapped off by the manufacturer. This is done to eliminate the possibility of lubrication later in the ball joints life thus damaging the non-vented ball joint seal boot.

The ball joint used on this vehicle is replaceable and can be serviced as a separate component of the lower control arm.

OPERATION

The lower control arm supports the lower end of the steering knuckle and allows for the up and down movement of the suspension during the jounce and rebound travel. The lower control arm ball joint connects the arm to the steering knuckle.

The ball joint is a pivotal joint on the lower control arm that allows the knuckle to move up and down, and turn with ease.

STABILIZER BAR (FRONT)

DESCRIPTION

The stabilizer bar interconnects both front lower control arms of the vehicle and is attached to the front suspension crossmember (Fig. 1).

Attachment of the stabilizer bar to the front suspension crossmember is through 2 rubber-isolator cushion and retainers (Fig. 1). The stabilizer bar attachment to the lower control arm is done by utilizing an isolated stabilizer bar link at each arm. All components of the stabilizer bar are serviceable.

OPERATION

The stabilizer bar helps control vehicle body roll. Jounce and rebound movements affecting one wheel are partially transmitted to the opposite wheel of the vehicle through the stabilizer bar.

DIAGNOSIS AND TESTING

SUSPENSION AND STEERING DIAGNOSIS

CONDITION	POSSIBLE CAUSES	POTENTIAL CORRECTIONS
Front End Whine On Turns	1. Defective Wheel Bearing	1. Replace Wheel Bearing
	2. Incorrect Wheel Alignment	2. Check And Reset Wheel Alignment
	3. Worn Tires	3. Replace Tires
Front End Growl Or Grinding On Turns	1. Defective Wheel Bearing	1. Replace Wheel Bearing
	2. Engine Mount Grounding Against Frame Or Body Of Vehicle.	2. Check For Motor Mount Hitting Frame Rail And Reposition Engine As Required
	3. Worn Or Broken C/V Joint	3. Replace C/V Joint
	4. Loose Wheel Lug Nuts	4. Verify Wheel Lug Nut Torque
	5. Incorrect Wheel Alignment	5. Check And Reset Wheel Alignment
	6. Worn Tires	6. Replace Tires
Front End Clunk Or Snap On Turns	1. Loose Wheel Lug Nuts	1. Verify Wheel Lug Nut Torque
	2. Worn Or Broken C/V Joint	2. Replace C/V Joint
	3. Worn Or Loose Tie Rod Or Ball Joint	3. Tighten Or Replace Tie Rod End Or Ball Joint
	4. Worn Control Arm Bushing	4. Replace Control Arm Bushing
	5. Loose Sway Bar Or Upper Strut Attachment	5. Tighten Sway Bar Or Upper Strut Attachment To Specified Torque

DIAGNOSIS AND TESTING (Continued)

CONDITION	POSSIBLE CAUSES	POTENTIAL CORRECTIONS
Front End Whine With Vehicle Going Straight At A Constant Speed	1. Defective Wheel Bearing	1. Replace Wheel Bearing
	2. Incorrect Wheel Alignment	2. Check And Reset Wheel Alignment
	3. Worn Tires	3. Replace Tires
Front End Growl Or Grinding With Vehicle Going Straight At A Constant Speed	1. Engine Mount Grounding	1. Reposition Engine As Required
	2. Worn Or Broken C/V Joint	2. Replace C/V Joint
Front End Whine When Accelerating Or Decelerating	1. Worn Or Defective Transaxle Gears Or Bearings	1. Replace Transaxle Gears Or Bearings
Front End Clunk When Accelerating Or Decelerating	1. Worn Or Broken Engine Mount	1. Replace Engine Mount
	2. Worn Or Defective Transaxle Gears Or Bearings	2. Replace Transaxle Gears Or Bearings
	3. Loose Wheel Lug Nuts	3. Verify Wheel Lug Nut Torque
	4. Worn Or Broken C/V Joint	4. Replace C/V Joint
	5. Worn Or Loose Ball Joint	5. Tighten Or Replace Ball Joint
	6. Worn Or Loose Control Arm Bushing	6. Tighten To Specified Torque Or Replace Control Arm Bushing
	7. Loose Crossmember Bolts	7. Tighten Crossmember Bolts To Specified Torque
Road Wander	1. Incorrect Tire Pressure	1. Inflate Tires To Rcommended Pressure
	2. Incorrect Front Or Rear Wheel Toe	2. Check And Reset Front Wheel Toe
	3. Worn Wheel Bearings	3. Replace Wheel Bearing
	4. Worn Control Arm Bushings	4. Replace Control Arm Bushing
	5. Excessive Friction In Steering Gear	5. Replace Steering Gear
	6. Excessive Friction In Steering Shaft Coupling	6. Replace Steering Coupler
	7. Excessive Friction In Strut Upper Bearing	7. Replace Strut Bearing
Lateral Pull	1. Unequal Tire Pressure	1. Inflate All Tires To Recommended Pressure
	2. Radial Tire Lead	2. Perform Lead Correction Procedure
	3. Incorrect Front Wheel Camber	3. Check And Reset Front Wheel Camber
	4. Power Steering Gear Imbalance	4. Replace Power Steering Gear
	5. Wheel Braking	5. Correct Braking Condition Causing Lateral Pull

DIAGNOSIS AND TESTING (Continued)

CONDITION	POSSIBLE CAUSES	POTENTIAL CORRECTIONS
Excessive Steering Free Play	1. Incorrect Steering Gear Adjustment	1. Adjust Or Replace Steering Gear
	2. Worn Or Loose Tie Rod Ends	2. Replace Or Tighten Tie Rod Ends
	3. Loose Steering Gear Mounting Bolts	3. Tighten Steering Gear Bolts To The Specified Torque
	4. Loose Or Worn Steering Shaft Coupler	5. Replace Steering Shaft Coupler
Excessive Steering Effort	1. Low Tire Pressure	1. Inflate All Tires To Recommended Pressure
	2. Lack Of Lubricant In Steering Gear	2. Replace Steering Gear
	3. Low Power Steering Fluid Level	3. Fill Power Steering Fluid Reservoir To Correct Level
	4. Loose Power Steering Pump Belt	4. Check and replace automatic belt tensioner as necessary. If drive belt is worn or glazed, replace belt.
	5. Lack Of Lubricant In Steering Ball Joints	5. Lubricate Or Replace Steering Ball Joints
	6. Steering Gear Malfunction	6. Replace Steering Gear
	7. Lack Of Lubricant In Steering Coupler	7. Replace Steering Coupler

STRUT ASSEMBLY (FRONT)

Inspect the strut assembly for the following conditions (Fig. 3) :

- Inspect for a damaged or broken coil spring.
- Inspect for a torn or damaged strut assembly dust shield.
- Lift the dust shield and inspect the strut assembly for evidence of fluid running from the upper end of the strut fluid reservoir. (Actual leakage will be a stream of fluid running down the side and dripping off lower end of unit). A slight amount of seepage between the strut shaft and strut shaft seal is not unusual and does not affect performance of the strut assembly.
- Lift the dust shield and inspect the jounce bumper for signs of damage or deterioration.
- Inspect the clearance between the shock tower and the coil spring. Make sure no fasteners are protruding through the shock tower possibly contacting the coil spring and strut. Because of the minimum clearance in this area (Fig. 2), installation of metal fasteners could damage the coil spring coating and lead to a corrosion failure of the spring.

CAUTION: At no time when servicing a vehicle can a sheet metal screw, bolt or other metal fastener be installed into the shock tower to take the place of an original plastic clip. Also, do not drill holes into the front shock tower for the installation of any metal fasteners into the shock tower area indicated (Fig. 2).

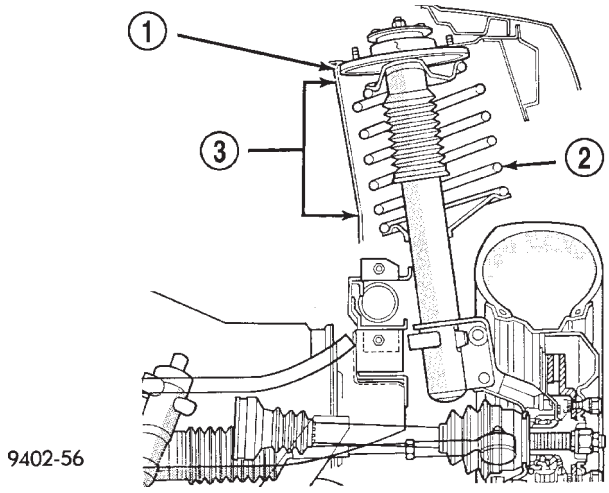

Fig. 2 Shock Tower Area (Typical)

1 – SHOCK TOWER
2 – COIL SPRING
3 – NO SHEET METAL SCREWS, BOLTS, OR ANY OTHER METAL FASTENERS ARE TO BE INSTALLED INTO SHOCK TOWER IN THIS AREA. ALSO, NO HOLES ARE TO BE DRILLED INTO SHOCK TOWER IN THIS SAME AREA.

DIAGNOSIS AND TESTING (Continued)

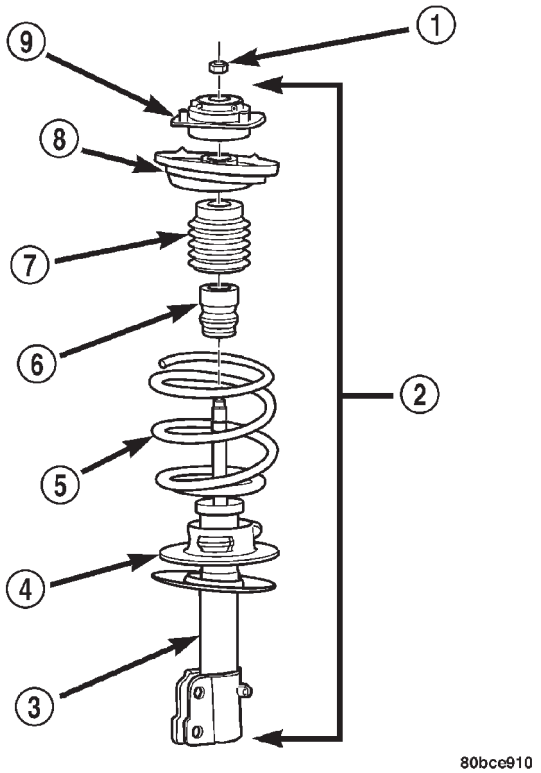

Fig. 3 Strut Assembly

1 – NUT
2 – STRUT ASSEMBLY
3 – STRUT
4 – LOWER SPRING ISOLATOR
5 – COIL SPRING
6 – JOUNCE BUMPER
7 – DUST SHIELD
8 – SPRING SEAT AND BEARING (WITH SPRING ISOLATOR)
9 – UPPER MOUNT

STEERING KNUCKLE

The front suspension steering knuckle is not a repairable component of the front suspension. It must be replaced if found to be damaged in any way. If it is determined that the steering knuckle is bent when servicing the vehicle, no attempt is to be made to straighten the steering knuckle.

WHEEL BEARING AND HUB

The wheel bearing is designed for the life of the vehicle and requires no type of periodic maintenance. The following procedure may be used for diagnosing the condition of the wheel bearing and hub.

With the wheel, disc brake caliper, and brake rotor removed, rotate the wheel hub. Any roughness or resistance to rotation may indicate dirt intrusion or a failed hub bearing. If the bearing exhibits any of these conditions during diagnosis, the hub bearing will require replacement. The bearing is not serviceable.

Damaged bearing seals and the resulting excessive grease loss may also require bearing replacement. Moderate grease weapage from the bearing is considered normal and should not require replacement of the wheel bearing.

To diagnose a bent hub, refer to BRAKE ROTOR in the DIAGNOSIS AND TESTING section in the BRAKES service manual group for the procedure on measuring hub runout.

LOWER CONTROL ARM

Inspect the lower control arm for signs of damage from contact with the ground or road debris. If the lower control arm shows any sign of damage, look for distortion. Do not attempt to repair or straighten a broken or bent lower control arm. If damaged, the lower control arm stamping is serviced only as a complete component.

The serviceable components of the lower control arm are: the ball joint, the ball joint grease seal and the lower control arm rear isolator bushing.

Inspect both lower control arm isolator bushings for severe deterioration and replace as required. Inspect the ball joint per the inspection procedure in this section of the service manual and replace as required. Refer to BALL JOINT in this section of this service manual group.

LOWER CONTROL ARM BALL JOINT

With the weight of the vehicle resting on the road wheels, grasp the headless grease fitting as shown (Fig. 4). With no mechanical assistance or added force, attempt to move the grease fitting. If the ball joint is worn, the grease fitting will move. If movement is noted, replace the ball joint.

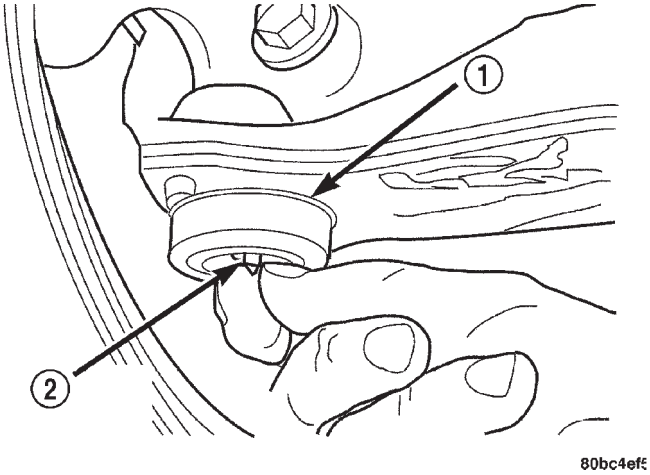

Fig. 4 Checking Ball Joint Wear

1 – BALL JOINT
2 – HEADLESS GREASE FITTING

DIAGNOSIS AND TESTING (Continued)

CAUTION: No attempt should be made to service the headless grease fitting on the ball joint. It has been purposely snapped off by the manufacturer to avoid over-greasing.

STABILIZER BAR (FRONT)

Inspect for broken, cracked or distorted stabilizer bar cushions and retainers. Inspect for worn or damaged stabilizer bar links (Fig. 1).

SERVICE PROCEDURES

LUBRICATION

There are no serviceable lubrication points on the front suspension. The front lower ball joints have grease fittings which have had the head snapped off by the manufacturer after they have been filled. This has been done to eliminate the possibility of damaging the non-vented seals. Grease will not leak from the broken grease fittings. The ball joints are sealed for life and require no maintenance.

CAUTION: No attempt should be made to replace the ball joint grease fitting with a new fitting, then filling the ball joint with grease. Damage to the grease seal can result.

REMOVAL AND INSTALLATION

SERVICE WARNINGS AND CAUTIONS

WARNING: DO NOT REMOVE THE STRUT SHAFT NUT WHILE STRUT ASSEMBLY IS INSTALLED IN VEHICLE, OR BEFORE THE COIL SPRING IS COMPRESSED WITH A COMPRESSION TOOL. THE SPRING IS HELD UNDER HIGH PRESSURE.

WARNING: DUST AND DIRT ACCUMULATING ON BRAKE PARTS DURING NORMAL USE MAY CONTAIN ASBESTOS FIBERS FROM PRODUCTION OR AFTERMARKET LININGS. BREATHING EXCESSIVE CONCENTRATIONS OF ASBESTOS FIBERS CAN CAUSE SERIOUS BODILY HARM. EXERCISE CARE WHEN SERVICING BRAKE PARTS. DO NOT SAND, OR GRIND BRAKE LINING UNLESS EQUIPMENT USED IS DESIGNED TO CONTAIN THE DUST RESIDUE. DO NOT CLEAN BRAKE PARTS WITH COMPRESSED AIR OR BY DRY BRUSHING. CLEANING SHOULD BE DONE BY DAMPENING THE BRAKE COMPONENTS WITH A FINE MIST OF WATER, THEN WIPING THE BRAKE COMPONENTS CLEAN WITH A DAMPENED CLOTH. DISPOSE OF CLOTH AND ALL RESIDUE CONTAINING ASBESTOS FIBERS IN AN IMPERMEABLE CONTAINER WITH THE APPROPRIATE LABEL. FOLLOW PRACTICES PRESCRIBED BY THE OCCUPATIONAL SAFETY AND HEALTH ADMINISTRATION (OSHA) AND THE ENVIRONMENTAL PROTECTION AGENCY (EPA) FOR THE HANDLING, PROCESSING, AND DISPOSITION OF DUST OR DEBRIS THAT MAY CONTAIN ASBESTOS FIBERS.

CAUTION: Only frame contact hoisting equipment must be used on this vehicle. It cannot be hoisted using equipment designed to lift a vehicle by the rear axle. If this type of hoisting equipment is used, damage to rear suspension components will occur.

CAUTION: At no time when servicing a vehicle can a sheet metal screw, bolt, or other metal fastener be installed in the shock tower to take the place of an original plastic clip. It may come into contact with the strut or coil spring.

CAUTION: Wheel bearing damage will result if after loosening the hub nut, the vehicle is rolled on the ground or the weight of the vehicle is allowed to be supported by the tires for a length of time.

STRUT ASSEMBLY (FRONT)

NOTE: Before proceeding with this procedure, review SERVICE WARNINGS AND CAUTIONS at the beginning of REMOVAL AND INSTALLATION in this section.

REMOVAL

(1) Raise the vehicle. Refer to HOISTING in the LUBRICATION AND MAINTENANCE group for the proper lifting procedure.

(2) Remove tire and wheel assembly from location on front of vehicle requiring strut removal.

(3) If both strut assemblies are to be removed, mark the strut assemblies right or left according to which side of the vehicle they were removed from.

(4) Remove the screw securing the ground strap to the rear of the strut (Fig. 5).

(5) If the vehicle is equipped with Antilock brakes (ABS), remove the screw securing the ABS wheel speed sensor to the rear of the strut (Fig. 5).

CAUTION: The strut assembly-to-steering knuckle attaching bolts are serrated and must not be turned during removal. Hold the bolts stationary in the steering knuckle while removing the nuts, then tap the bolts out using a pin punch.

REMOVAL AND INSTALLATION (Continued)

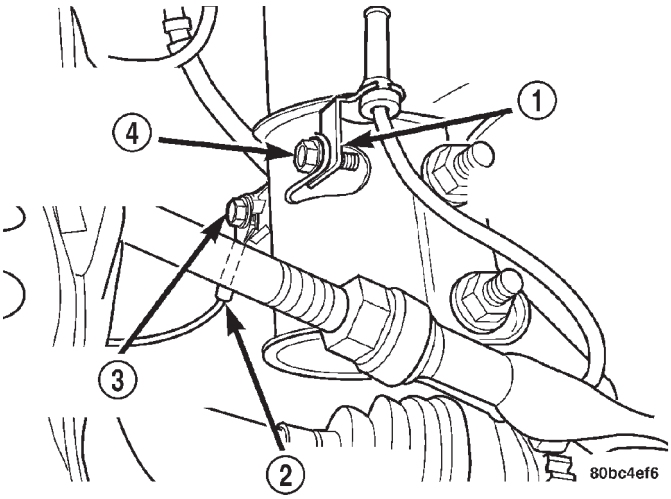

Fig. 5 Ground Strap And ABS Sensor Bracket

1 – ABS WHEEL SPEED SENSOR ROUTING BRACKET (IF EQUIPPED)
2 – GROUND STRAP
3 – GROUND STRAP SCREW
4 – ABS SENSOR BRACKET SCREW (IF EQUIPPED)

(6) Remove the two bolts attaching the strut to the steering knuckle (Fig. 1).

(7) Lower the vehicle just enough to open the hood, but without letting the tires touch the floor.

(8) Remove the three nuts attaching the upper mount of the strut assembly to the vehicle's strut tower (Fig. 6).

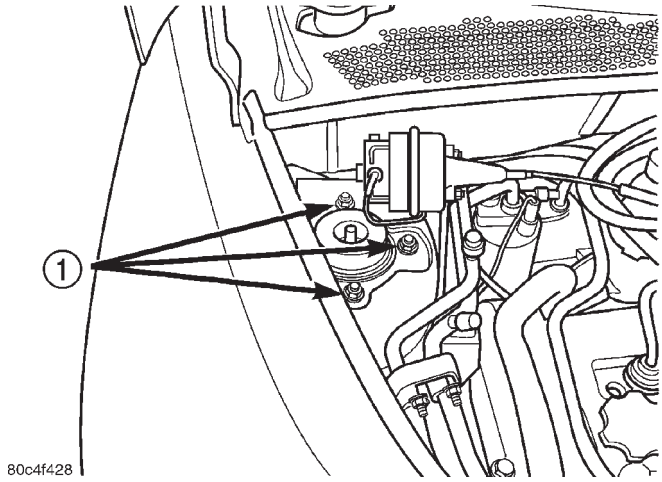

Fig. 6 Upper Mounting Nuts

1 – NUTS

(9) Remove the strut assembly from the vehicle.

(10) For disassembly and assembly procedures, refer to STRUT ASSEMBLY in the DISASSEMBLY AND ASSEMBLY section in this section of this service manual group.

INSTALLATION

(1) Install the strut assembly into the strut tower, aligning the three studs on the strut upper mount with the holes in strut tower. Install the three mounting nuts on the studs (Fig. 6). Tighten the three nuts to a torque of 34 N·m (25 ft. lbs.).

(2) Close the hood of the vehicle.

CAUTION: The strut assembly-to-steering knuckle attaching bolts are serrated and must not be turned during installation. Install the nuts while holding the bolts stationary in the steering knuckle.

(3) Position the lower end of the strut assembly in line with the upper end of the steering knuckle and align the mounting holes (Fig. 1). Install the two attaching bolts. The bolts should be installed with so that the nuts face towards the front of the vehicle once installed. Install the nuts. Holding the bolts in place tighten the nuts to a torque of 53 N·m (40 ft. lbs.) plus an additional 90° turn after the specified torque is met.

(4) If the vehicle is equipped with Antilock brakes (ABS), attach the ABS wheel speed sensor to the rear of the strut (rearward ear) using its mounting screw (Fig. 5). Tighten the mounting screw to a torque of 13 N·m (120 in. lbs.).

(5) Attach the ground strap to the rear of the strut (forward ear) using its mounting screw (Fig. 5). Tighten the mounting screw to a torque of 13 N·m (120 in. lbs.).

(6) Install the tire and wheel assembly. Install and tighten the wheel mounting nuts in proper sequence until all nuts are torqued to half specification. Next, repeat the tightening sequence to the full specified torque of 135 N·m (100 ft. lbs.).

(7) Lower the vehicle.

STEERING KNUCKLE

NOTE: Before proceeding with this procedure, review SERVICE WARNINGS AND CAUTIONS at the beginning of REMOVAL AND INSTALLATION in this section.

REMOVAL

(1) Apply the brakes and hold in place.

(2) Raise the vehicle. Refer to HOISTING in the LUBRICATION AND MAINTENANCE group for the proper lifting procedure.

(3) Remove the front tire and wheel assembly.

(4) Remove the cotter pin, lock nut and spring washer from the hub nut (Fig. 7).

(5) While the brakes are applied, loosen and remove the hub nut on the end of the driveshaft (Fig. 7).

REMOVAL AND INSTALLATION (Continued)

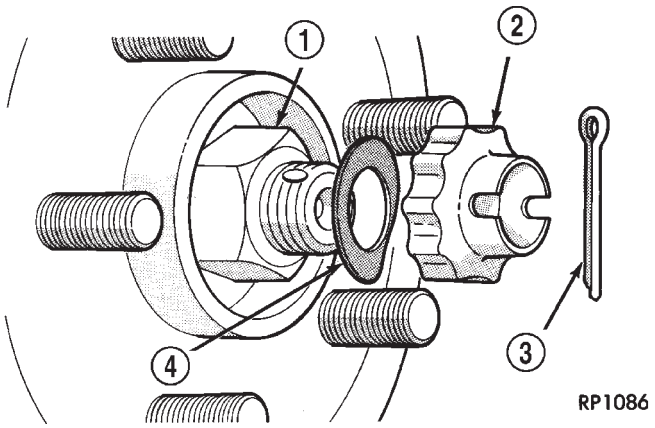

Fig. 7 Hub Nut

1 – HUB NUT
2 – NUT LOCK
3 – COTTER PIN
4 – SPRING WASHER

(6) Release the brakes.

(7) Remove the front disc brake caliper and adapter as an assembly, and the brake rotor from the steering knuckle. Refer to BRAKE ROTOR in the BRAKE section for the procedure.

(8) Remove the nut attaching the outer tie rod to the steering knuckle. To do this, hold the tie rod end stud with a wrench while loosening and removing the nut with a standard wrench or crowfoot wrench (Fig. 8).

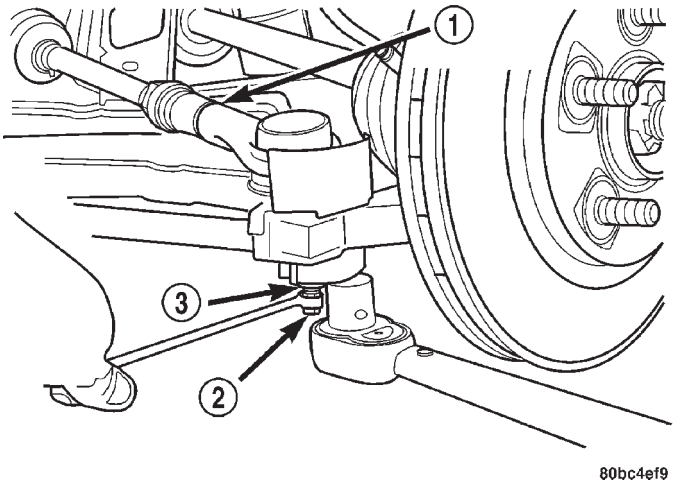

Fig. 8 Tie Rod Nut Removal/Installation

1 – OUTER TIE ROD
2 – STUD
3 – NUT

(9) Remove the tie rod end from the steering knuckle using Remover, Special Tool MB991113 (Fig. 9).

(10) Remove the tie rod heat shield.

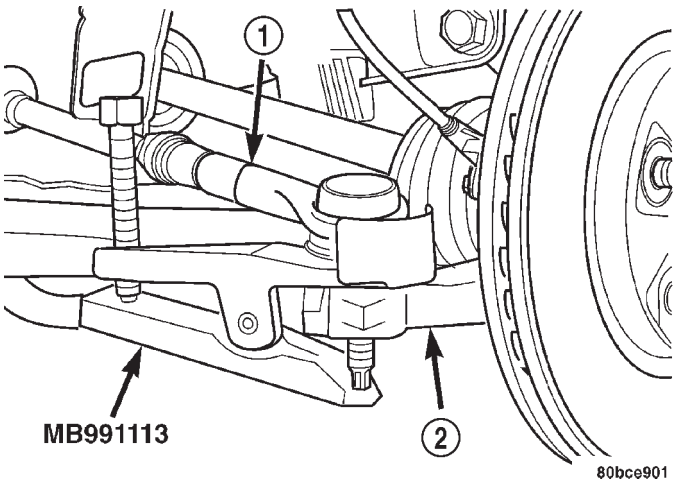

Fig. 9 Tie Rod Removal

1 – OUTER TIE ROD
2 – STEERING KNUCKLE

(11) Remove the nut and pinch bolt clamping the ball joint stud to the steering knuckle (Fig. 10).

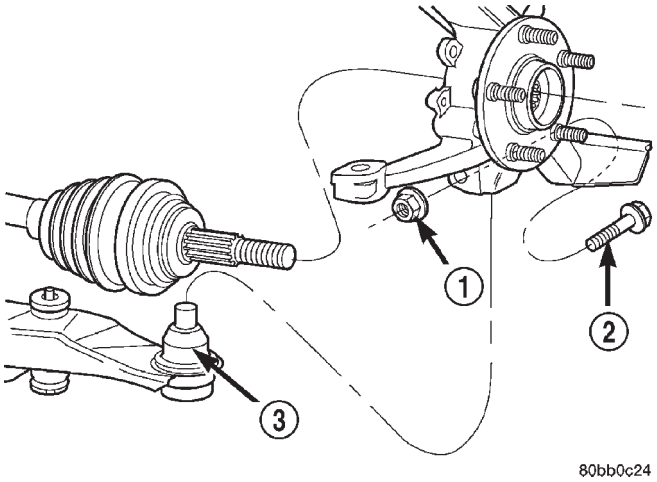

Fig. 10 Ball Joint Bolt And Nut

1 – NUT
2 – BOLT
3 – BALL JOINT

CAUTION: The strut assembly-to-steering knuckle attaching bolts are serrated and must not be turned during removal. Hold the bolts stationary in the steering knuckles while removing the nuts, then tap the bolts out using a pin punch.

(12) Remove the two bolts attaching the strut to the steering knuckle.

NOTE: Use caution when separating the ball joint stud from the steering knuckle, so the ball joint seal does not get cut.

REMOVAL AND INSTALLATION (Continued)

(13) Separate the ball joint stud from the steering knuckle by prying down on lower control arm and up against the ball joint boss on the steering knuckle (Fig. 11).

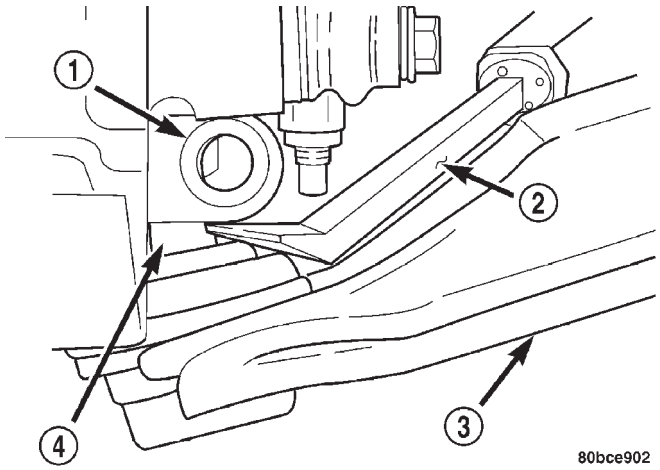

Fig. 11 Separate Ball Joint from Knuckle

1 – STEERING KNUCKLE
2 – PRY BAR
3 – LOWER CONTROL ARM
4 – BALL JOINT STUD

NOTE: Do not allow the driveshaft to hang by the inner C/V joint; it must be supported to keep the joint from separating during this operation.

(14) Pull the steering knuckle off the driveshaft outer C/V joint splines and remove the steering knuckle.

NOTE: The cartridge type front wheel bearing used on this vehicle is not transferable to the replacement steering knuckle. If the replacement steering knuckle does not come with a wheel bearing, a new bearing must be installed in the steering knuckle. Installation of the new wheel bearing and hub must be done before installing the steering knuckle on the vehicle.

(15) If the steering knuckle is to be replaced, refer to STEERING KNUCKLE in the DISASSEMBLY AND ASSEMBLY section in this section of this service manual group for the wheel bearing and hub removal and installation procedure. Do not reuse the wheel bearing

INSTALLATION

(1) If the steering knuckle has been replaced, refer to STEERING KNUCKLE in DISASSEMBLY AND ASSEMBLY found in this section of this service manual group for the wheel bearing and hub installation procedure. Do not reuse the old wheel bearing.

(2) Slide the hub of the steering knuckle onto the splines on the driveshaft C/V joint.

(3) Install the steering knuckle onto the ball joint stud aligning the bolt hole in the knuckle boss with the notch formed in the side of the ball joint stud.

(4) Install a new ball joint stud pinch bolt and nut (Fig. 10). Tighten the nut to a torque of 95 N·m (70 ft. lbs.).

CAUTION: The strut assembly-to-steering knuckle attaching bolts are serrated and must not be turned during installation. Install the nuts while holding the bolts stationary in the steering knuckle.

(5) Position the lower end of the strut assembly in line with the upper end of the steering knuckle and align the mounting holes (Fig. 1). Install the two attaching bolts. The bolts should be installed with so that the nuts face towards the front of the vehicle once installed. Install the nuts. Holding the bolts in place tighten the nuts to a torque of 53 N·m (40 ft. lbs.) plus an additional 90° turn after the specified torque is met.

(6) Place the tie rod heat shield on the steering knuckle arm so that the shield is positioned straight away from the steering gear and tie rod end once installed. Align the hole in the shield with the hole in the steering knuckle arm.

(7) Install the outer tie rod ball stud into the hole in the steering knuckle arm. Start the tie rod attaching nut onto the stud. Hold the tie rod end stud with a wrench while tightening the nut with a standard wrench or crowfoot wrench (Fig. 8). To fully tighten the nut to specifications, use a crowfoot wrench on a torque wrench to turn the nut, and a wrench on the stud. Tighten the nut to a torque of 55 N·m (40 ft. lbs.).

(8) Install the brake rotor, disc brake caliper and adapter. Refer to BRAKE ROTOR in the BRAKE section for the procedure.

(9) Clean all foreign matter from the threads of the driveshaft outer C/V joint.

(10) Install the hub nut in the end of the driveshaft and snug it (Fig. 7).

(11) Have a helper apply the brakes. With vehicle brakes applied to keep brake rotor and hub from turning, tighten the hub nut to a torque of 244 N·m (180 ft. lbs.)

(12) Install the spring washer, lock nut and cotter pin on the hub nut (Fig. 7). Wrap the cotter pin ends tightly around the lock nut (Fig. 12).

(13) Install the tire and wheel assembly. Install the wheel mounting nuts and tighten them to a torque of 135 N·m (100 ft. lbs.).

(14) Lower the vehicle.

REMOVAL AND INSTALLATION (Continued)

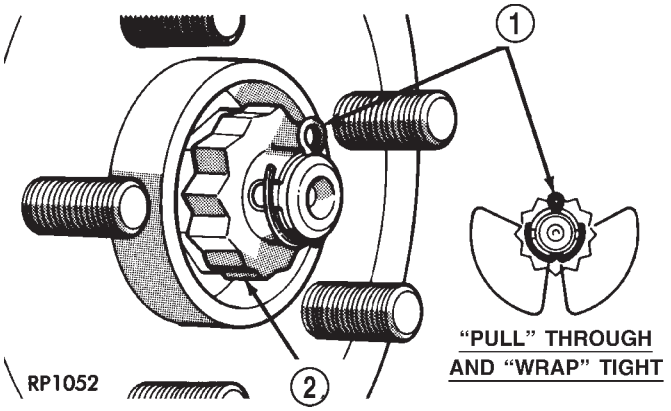

Fig. 12 Correctly Installed Cotter Pin

1 – COTTER PIN
2 – NUT LOCK

(15) Set the front toe on the vehicle to required specification. Refer to WHEEL ALIGNMENT in this service manual group.

LOWER CONTROL ARM

NOTE: Before proceeding with this procedure, review SERVICE WARNINGS AND CAUTIONS at the beginning of REMOVAL AND INSTALLATION in this section.

REMOVAL

(1) Raise the vehicle. Refer to HOISTING in the LUBRICATION AND MAINTENANCE group for the proper lifting procedure.

(2) Remove the front tire and wheel assembly.

(3) Remove both stabilizer bar links from the vehicle (Fig. 13). Remove each link by holding the upper retainer/nut with a wrench and turning the link bolt.

(4) Rotate the forward ends of the stabilizer bar downward. It may be necessary to loosen the stabilizer bar cushion retainer bolts a little to ease any turning resistance.

(5) Remove the nut and pinch bolt clamping the ball joint stud to the steering knuckle (Fig. 14).

CAUTION: After removing the steering knuckle from the ball joint stud, do not pull outward on the knuckle. Pulling the steering knuckle outward at this point can separate the inner C/V joint on the driveshaft. Refer to FRONT DRIVESHAFTS in the DIFFERENTIAL AND DRIVELINE group for further information.

NOTE: Use caution when separating the ball joint stud from the steering knuckle, so the ball joint seal does not get cut.

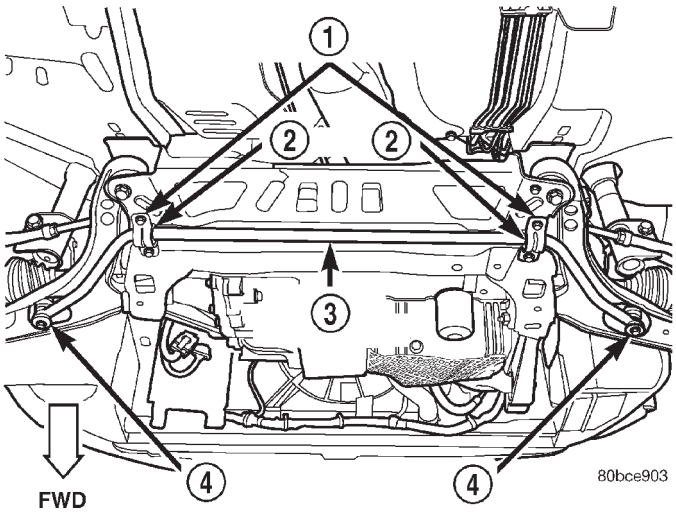

Fig. 13 Stabilizer Bar Links

1 – STABILIZER BAR CUSHION RETAINERS
2 – CUSHIONS
3 – FRONT STABILIZER BAR
4 – STABILIZER BAR LINKS

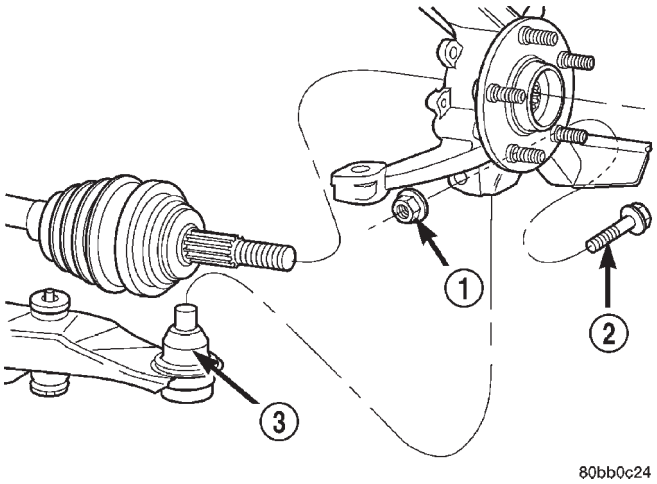

Fig. 14 Ball Joint Bolt And Nut

1 – NUT
2 – BOLT
3 – BALL JOINT

(6) Separate the ball joint stud from the steering knuckle by prying down on lower control arm and up against the ball joint boss on the steering knuckle (Fig. 11).

(7) If the right lower control arm is being serviced, perform the following:

(a) Remove the screws fastening the front fascia to the reinforcement as necessary in order to access the drive-belt splash shield forward fastener screw (Fig. 15).

(b) Remove the drive-belt splash shield fasteners (Fig. 15). Remove the shield.

REMOVAL AND INSTALLATION (Continued)

(c) Remove the pencil strut from the right front corner of the crossmember and body of the vehicle (Fig. 16). Remove the washer behind the strut from the torque strut bolt.

(d) Remove the bolts mounting the engine torque strut in place (Fig. 16), then remove the engine torque strut from the vehicle.

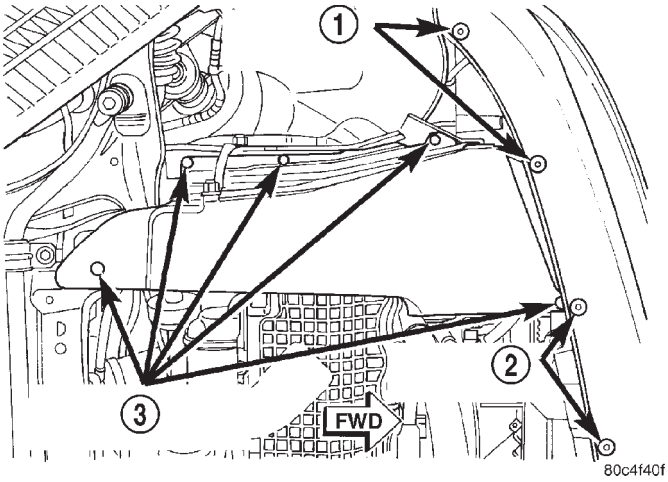

Fig. 15 Fascia And Splash Shield Fasteners

1 – FASCIA FASTENERS
2 – FASCIA FASTENERS
3 – SPLASH SHIELD FASTENERS

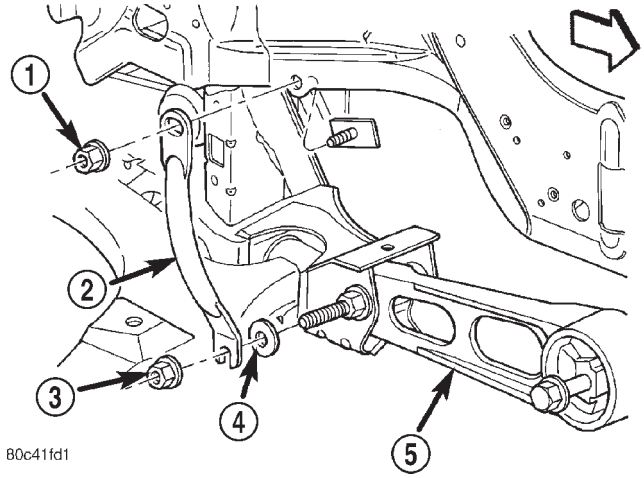

Fig. 16 Strut Mounting

1 – NUT
2 – PENCIL STRUT
3 – NUT
4 – FLAT WASHER
5 – LOWER TORQUE STRUT

(8) Remove the front pivot bolt attaching the lower control arm to the front suspension crossmember (Fig. 17). Remove the rear pivot bolt attaching the lower control arm to the front suspension crossmember and frame rail. Remove the lower control arm from the crossmember.

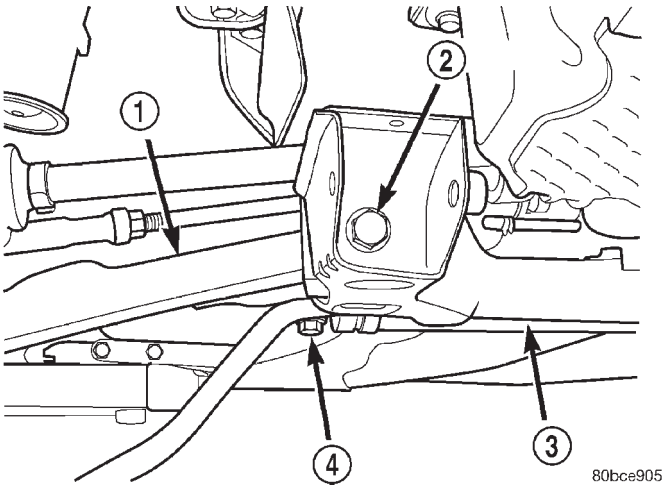

Fig. 17 Lower Control Arm Attaching Bolts

1 – LOWER CONTROL ARM
2 – FRONT BOLT
3 – CROSSMEMBER
4 – REAR BOLT

INSTALLATION

(1) Position the lower control arm into the crossmember (Fig. 17). Install, but do not fully tighten, the rear pivot bolt attaching the lower control arm to the front suspension crossmember and frame rail. Install, but do not fully tighten, the front pivot bolt attaching the lower control arm to the front suspension crossmember.

(2) With no weight on the lower control arm, tighten the lower control arm rear pivot (and suspension crossmember) bolt to a torque of 250 N·m (185 ft. lbs.), then tighten the lower control arm front pivot bolt to a torque of 163 N·m (120 ft. lbs.).

(3) Install the ball joint stud into the steering knuckle aligning the bolt hole in the knuckle boss with the notch formed in the side of the ball joint stud.

(4) If the right lower control arm has been serviced, perform the following:

(a) Install the engine torque strut (Fig. 16). Follow the procedure described in the ENGINE service manual group to properly align and tighten the torque strut.

(b) Install the washer on the end of the stud extending from the torque strut bolt (Fig. 16).

(c) Install the pencil strut to the right front corner of the crossmember and body of the vehicle (Fig. 16). Tighten the pencil strut nuts to a torque of 58 N·m (43 ft. lbs.).

(d) Install the drive-belt splash shield and fasteners (Fig. 15).

(e) Install the screws fastening the front fascia to the reinforcement (Fig. 15).

(5) Install a new ball joint stud pinch bolt and nut (Fig. 14). Tighten the nut to a torque of 95 N·m (70 ft. lbs.).

REMOVAL AND INSTALLATION (Continued)

(6) Rotate the forward ends of the stabilizer bar into mounting position.

(7) Clean the threads of the stabilizer bar link bolts, then apply Mopar® Lock And Seal or equivalent to the threads.

(8) Install both stabilizer bar links back on vehicle (Fig. 13). Start each stabilizer bar link bolt with bushing from the bottom, through the stabilizer bar, inner link bushings, lower control arm, and into the upper retainer/nut and bushing (Fig. 1). Do not fully tighten the link assemblies at this time.

(9) Lower the vehicle to ground level.

NOTE: It may be necessary to put the vehicle on a platform hoist or alignment rack to gain access to the stabilizer bar mounting bolts with the vehicle at curb height.

(10) Tighten each stabilizer bar link by holding the upper retainer/nut with a wrench and turning the link bolt. Tighten each link bolt to a torque of 28 N·m (250 in. lbs.).

(11) If previously loosened, tighten the stabilizer bar cushion retainer bolts to a torque of 28 N·m (250 in. lbs.).

STABILIZER BAR (FRONT)

NOTE: Before proceeding with this procedure, review SERVICE WARNINGS AND CAUTIONS at the beginning of REMOVAL AND INSTALLATION in this section.

REMOVAL

(1) Raise the vehicle. Refer to HOISTING in the LUBRICATION AND MAINTENANCE group for the proper lifting procedure.

(2) Remove both stabilizer bar links from the vehicle (Fig. 18). Remove each link by holding the upper retainer/nut with a wrench and turning the link bolt.

(3) Remove the stabilizer bar cushion retainer bolts and retainers (Fig. 18), and remove the stabilizer bar with cushions attached from the vehicle.

(4) To remove the cushions from the stabilizer bar, peel back each cushion at the slit and roll it off the bar.

INSTALLATION

NOTE: Before stabilizer bar installation, inspect the cushions and links for excessive wear, cracks, damage and distortion. Replace any pieces failing inspection.

(1) If removed, install the stabilizer bar cushions on the stabilizer bar utilizing the slit in each cushion. Position the cushions at each end of the bar's straight beam, just before it begins to curve.

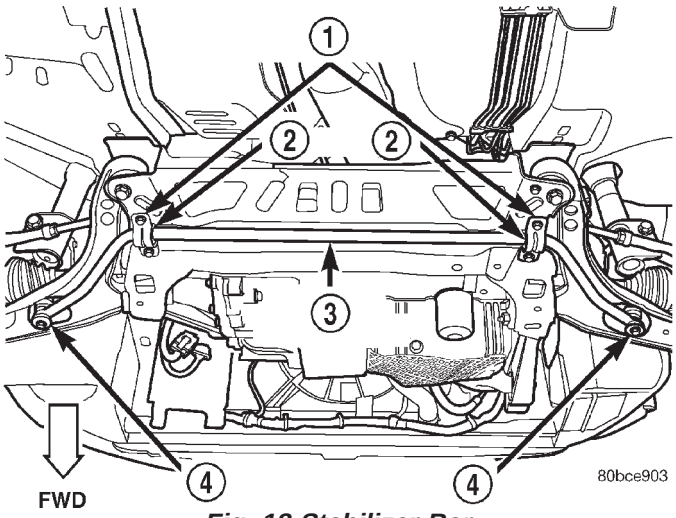

Fig. 18 Stabilizer Bar

1 – STABILIZER BAR CUSHION RETAINERS
2 – CUSHIONS
3 – FRONT STABILIZER BAR
4 – STABILIZER BAR LINKS

NOTE: Before installing the stabilizer bar, make sure the bar is not upside-down. The stabilizer bar must be installed with the curve on the outboard ends of the bar facing downward to clear the control arms once fully installed (Fig. 19).

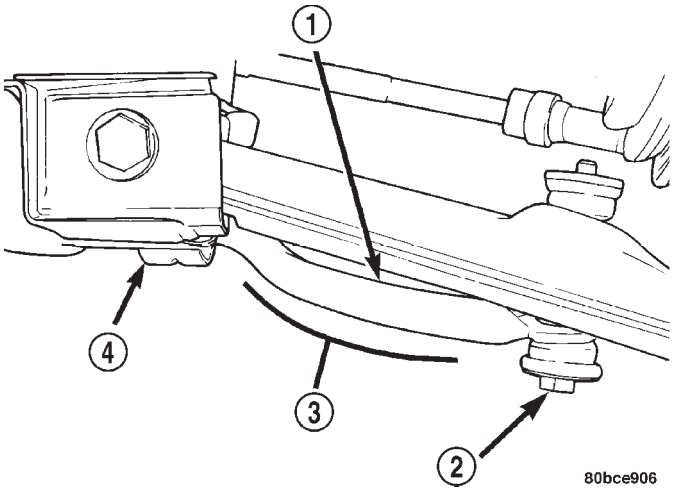

Fig. 19 Downward Curve

1 – STABILIZER BAR
2 – LINK
3 – DOWNWARD CURVE
4 – CUSHION RETAINER

(2) First, place the stabilizer bar in position on the front suspension crossmember. The slits in each cushion must point toward the front of the vehicle and sit directly on top of the raised beads formed into the stamping on the crossmember. Next, install the cushion retainers, matching the raised beads formed into the cushion retainers to the grooves formed into the cushions. Install the cushion retainer

REMOVAL AND INSTALLATION (Continued)

bolts, but do not completely tighten them at this time.

(3) Clean the threads of the stabilizer bar link bolts, then apply Mopar® Lock And Seal or equivalent to the threads.

(4) Install both stabilizer bar links back on vehicle (Fig. 18). Start each stabilizer bar link bolt with bushing from the bottom, through the stabilizer bar, inner link bushings, lower control arm, and into the upper retainer/nut and bushing (Fig. 1). Do not fully tighten the link assemblies at this time.

(5) Lower the vehicle.

NOTE: It may be necessary to put the vehicle on a platform hoist or alignment rack to gain access to the stabilizer bar mounting bolts with the vehicle at curb height.

(6) Tighten each stabilizer bar link by holding the upper retainer/nut with a wrench and turning the link bolt. Tighten each link bolt to a torque of 28 N·m (250 in. lbs.).

(7) Tighten the stabilizer bar cushion retainer bolts to a torque of 28 N·m (250 in. lbs.).

WHEEL MOUNTING STUD (FRONT)

NOTE: Before proceeding with this procedure, review SERVICE WARNINGS AND CAUTIONS at the beginning of REMOVAL AND INSTALLATION in this section.

Use the following procedure to remove and install one of five studs on one wheel hub.

REMOVAL

(1) Raise the vehicle. Refer to HOISTING in the LUBRICATION AND MAINTENANCE group for the proper lifting procedure.

(2) Remove the front tire and wheel assembly.

(3) Remove the front disc brake caliper and adapter as an assembly, and the brake rotor from the steering knuckle. Refer to BRAKE ROTOR in the BRAKE section for the procedure.

CAUTION: Do not hammer wheel mounting studs out of the hub. Damage to the wheel bearing will occur, leading to premature bearing failure.

(4) Install a wheel mounting nut on the wheel mounting stud being removed from the hub far enough so the threads on the stud are even with end of lug nut. Rotate the hub so the stud requiring removal is aligned with notch cast into front of the steering knuckle. Install Remover, Special Tool C-4150, on hub flange and wheel stud (Fig. 20).

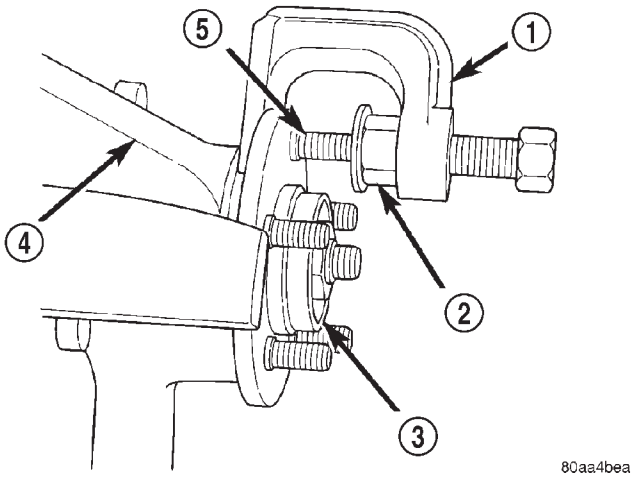

Fig. 20 Wheel Stud Removal

1 – SPECIAL TOOL C-4150A
2 – LUG NUT
3 – HUB/BEARING
4 – STEERING KNUCKLE
5 – WHEEL STUD

(5) Tighten the remover, pushing the wheel mounting stud out the rear of the hub flange. When the shoulder of the stud is past the flange, remove the remover from the hub. Remove the nut from the stud, then remove the stud from the flange.

INSTALLATION

(1) Install the wheel mounting stud in the flange of hub from the rear side. Install several washers and a wheel mounting nut on the stud (Fig. 21). The wheel mounting nut must be installed with the flat side of the wheel mounting nut against the washers to eliminate binding.

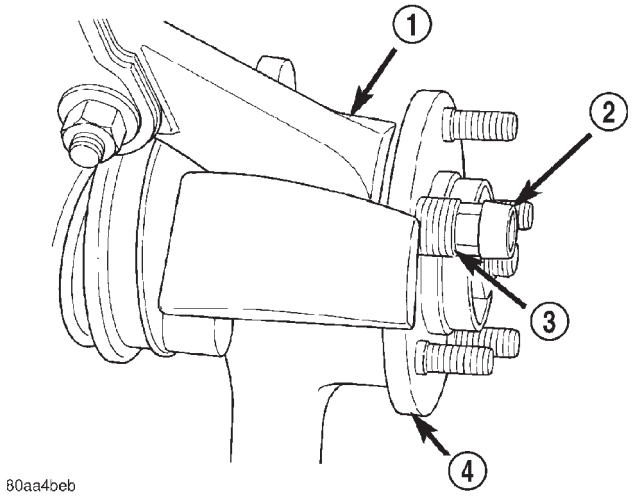

Fig. 21 Installing Wheel Stud

1 – STEERING KNUCKLE
2 – WHEEL LUG NUT
3 – WASHERS
4 – HUB/BEARING

REMOVAL AND INSTALLATION (Continued)

(2) Tighten the wheel mounting nut. This will pull the wheel mounting stud into the flange of the hub. When the head of the stud is fully seated against the rear of the hub flange, remove the wheel mounting nut and washers from the stud.

(3) Install the brake rotor, disc brake caliper and adapter. Refer to BRAKE ROTOR in the BRAKE section for the procedure.

(4) Install the tire and wheel assembly. Install the wheel mounting nuts and tighten them to a torque of 135 N·m (100 ft. lbs.).

(5) Lower the vehicle.

DISASSEMBLY AND ASSEMBLY

STRUT ASSEMBLY (FRONT)

The Strut assembly must be removed from the vehicle for it to be disassembled and assembled. Refer to REMOVAL AND INSTALLATION in this section for the required procedure.

For the disassembly and assembly of the strut assembly, use strut spring compressor, Pentastar Service Equipment (PSE) tool W-7200, or the equivalent, to compress the coil spring. Follow the manufacturer's instructions closely.

DISASSEMBLY

(1) If both struts are being serviced at the same time, mark the coil spring and strut assembly according to which side of the vehicle the strut was removed from, and which strut the coil spring was removed from.

(2) Position the strut assembly in the strut coil spring compressor following the manufacturers instructions. Set the lower hooks (Fig. 22), then set the upper hooks (Fig. 23). Position the strut clevis bracket straight outward away from the compressor. Place a clamp on the lower end of the coil spring, so the strut is held in place once the strut shaft nut is removed (Fig. 22).

WARNING: DO NOT REMOVE THE STRUT SHAFT NUT BEFORE THE COIL SPRING IS COMPRESSED. THE COIL SPRING IS HELD UNDER PRESSURE AND MUST BE COMPRESSED, REMOVING SPRING TENSION FROM THE UPPER MOUNT AND PIVOT BEARING, BEFORE THE SHAFT NUT IS REMOVED.

(3) Compress the coil spring until all coil spring tension is removed from the upper mount.

CAUTION: Never use impact or high speed tools to remove the strut shaft nut. Damage to the strut internal bearings may occur.

(4) Once the spring is sufficiently compressed, install Strut Nut Socket, Special Tool 6864, on the strut shaft retaining nut (Fig. 24). Next, install a socket on the hex on the end of the strut shaft. While holding the strut shaft from turning, remove the nut from the strut shaft.

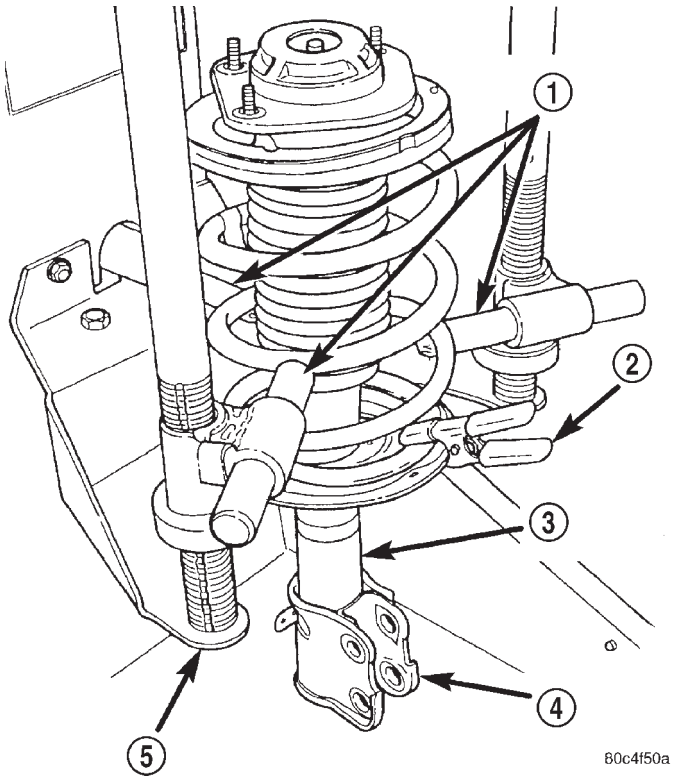

Fig. 22 Strut Assembly In Compressor (Lower)

1 – LOWER HOOKS
2 – CLAMP
3 – STRUT ASSEMBLY
4 – CLEVIS BRACKET
5 – SPRING COMPRESSOR

(5) Remove the upper mount from the strut shaft (Fig. 25).

(6) Remove the upper spring seat and bearing, along with the upper spring isolator as an assembly from the top of the coil spring by pulling them straight up (Fig. 25). The upper spring isolator can be separated from the spring seat and bearing once removed from vehicle.

(7) Remove the dust shield, then the jounce bumper from the strut shaft by pulling each straight up (Fig. 25).

(8) Remove the clamp from the bottom of the coil spring and remove the strut out through the bottom of the coil spring.

(9) Remove the lower spring isolator from the lower spring seat on the strut.

NOTE: If the coil spring needs to be serviced, proceed with the next step, otherwise, proceed with step Step 11.

DISASSEMBLY AND ASSEMBLY (Continued)

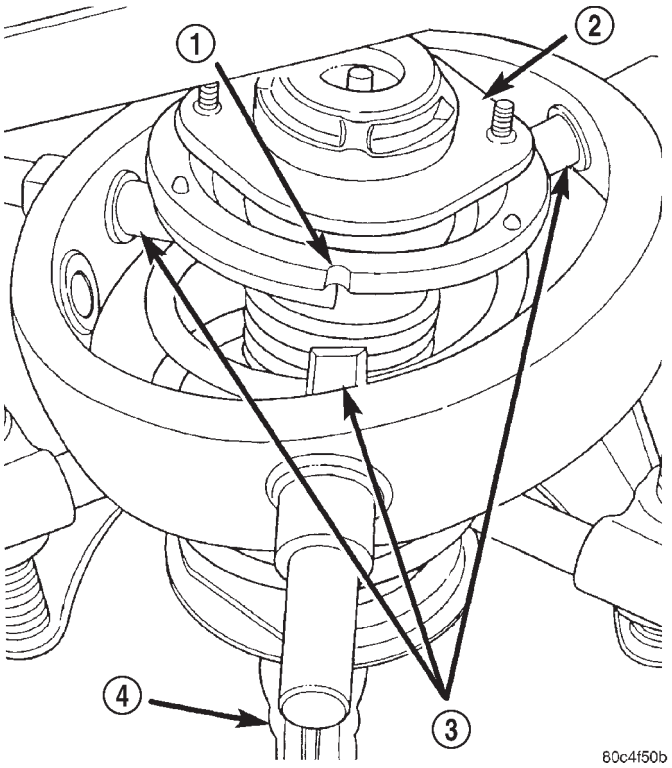

Fig. 23 Strut Assembly In Compressor (Upper)

1 – NOTCH IN UPPER SEAT
2 – UPPER MOUNT
3 – UPPER HOOKS
4 – CLEVIS BRACKET

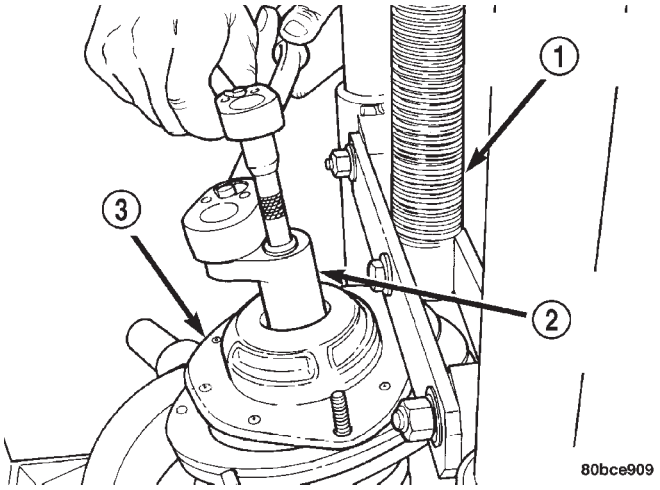

Fig. 24 Shaft Nut Removal/Installation

1 – SPRING COMPRESSOR
2 – SPECIAL TOOL 6864
3 – UPPER MOUNT

(10) Release the tension from the coil spring by backing off the compressor drive completely. Push back the compressor hooks and remove the coil spring.

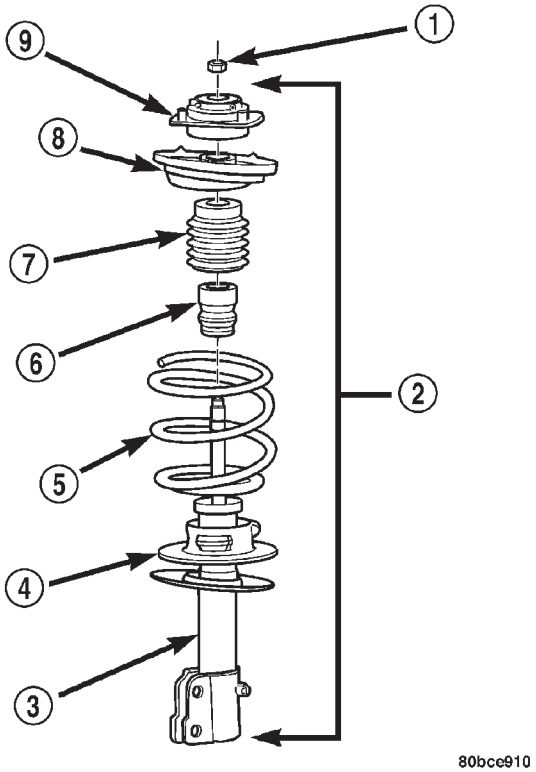

Fig. 25 Strut Assembly Components

1 – NUT
2 – STRUT ASSEMBLY
3 – STRUT
4 – LOWER SPRING ISOLATOR
5 – COIL SPRING
6 – JOUNCE BUMPER
7 – DUST SHIELD
8 – SPRING SEAT AND BEARING (WITH SPRING ISOLATOR)
9 – UPPER MOUNT

(11) Inspect the strut assembly components for the following and replace as necessary:

- Inspect the strut for any condition of shaft binding over the full stroke of the shaft.
- Inspect the jounce bumper for cracks and signs of deterioration.
- Check the upper mount for cracks and distortion and its retaining studs for any sign of damage.
- Check the upper spring seat and bearing for cracks and distortion.
- Check for binding of the upper spring seat and bearing pivot bearing.
- Inspect the dust shield for rips and deterioration.
- Inspect the upper and lower spring isolators for material deterioration and distortion.
- Inspect the coil spring for any sign of damage to the coating.

DISASSEMBLY AND ASSEMBLY (Continued)

ASSEMBLY

NOTE: If the coil spring has been removed from the spring compressor, proceed with the next step, otherwise, proceed with step Step 3.

(1) Place the coil spring in the compressor following the manufacturers instructions. Before compressing the spring, rotate the spring so the end of the top coil is directly in the front as shown (Fig. 26).

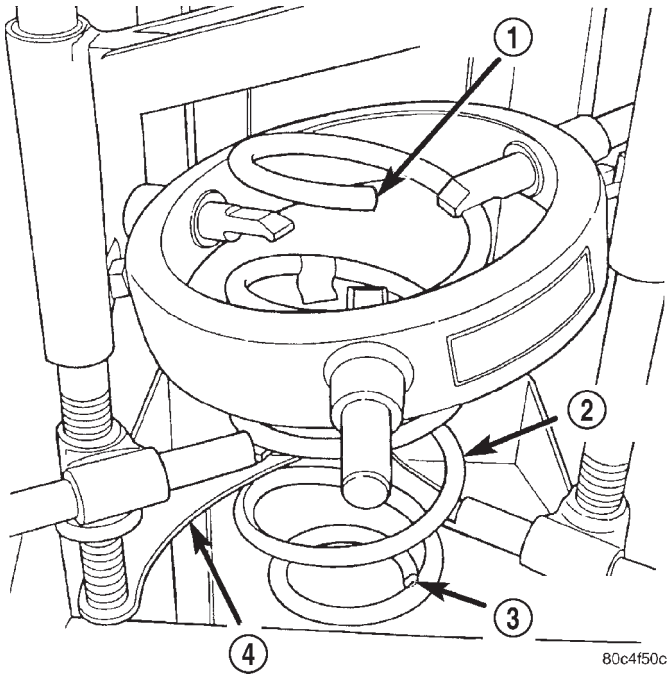

Fig. 26 Upper Coil Spring Positioning

1 – UPPER END OF COIL
2 – COIL SPRING
3 – LOWER END OF COIL
4 – SPRING COMPRESSOR

(2) Slowly compress the coil spring until enough room is available for strut assembly reassembly.

(3) Install the lower spring isolator on the lower spring seat of the strut.

(4) Install the strut through the bottom of the coil spring until the lower spring seat contacts the lower end of the coil spring. Rotate the strut as necessary until the clevis bracket is positioned straight outward away from the compressor (Fig. 22). Install the clamp on the lower end of the coil spring and strut, so the strut is held in place.

(5) Install the jounce bumper on the strut shaft. The jounce bumper is to be installed with the smaller end pointing downward toward the lower seat (Fig. 25).

(6) Install the dust shield on the strut shaft (Fig. 25). The bottom of the dust shield will snap to the retainer on top of the strut housing.

(7) If disassembled, reinstall the upper spring isolator on the upper spring seat and bearing.

(8) Install the upper spring seat and bearing on top of the coil spring. Position the notch formed into the edge of the upper seat straight out away from the compressor (Fig. 23). It should line up with the very end of the coil spring coil.

(9) Install the strut upper mount over the strut shaft and onto the top of the upper spring seat and bearing. Position the mount so that the third mounting stud on the mount top is inward toward the compressor, opposite the clevis bracket.

CAUTION: Never use impact or high speed tools to install the strut shaft nut. Damage to the strut internal bearings may occur.

(10) Loosely install the retaining nut on the strut shaft. Install Strut Nut Socket (on the end of a torque wrench), Special Tool 6864, on the strut shaft retaining nut (Fig. 24). Next, install a socket on the hex on the end of the strut shaft. While holding the strut shaft from turning, tighten the strut shaft retaining nut to a torque of 75 N·m (55 ft. lbs.).

(11) Slowly release the tension from the coil spring by backing off the compressor drive completely. As the tension is relieved, make sure the upper mount and seat and bearing align properly. Verify the upper mount does not bind.

(12) Remove the clamp from the lower end of the coil spring and strut. Push back the spring compressor upper and lower hooks, then remove the strut assembly from the spring compressor.

(13) Install the strut assembly on the vehicle. Refer to REMOVAL AND INSTALLATION in this section for the required procedure.

STEERING KNUCKLE (WHEEL BEARING AND HUB)

NOTE: The removal and installation of the wheel bearing and hub from the steering knuckle is only to be done with the steering knuckle removed from the vehicle. Removal of the wheel bearing from the steering knuckle must be done using the following procedure.

DISASSEMBLY

(1) Remove steering knuckle, hub, and wheel bearing as an assembly from the vehicle. Refer to STEERING KNUCKLE in the REMOVAL AND INSTALLATION section in this service manual group.

DISASSEMBLY AND ASSEMBLY (Continued)

(2) Three wheel studs across from one another require removal from the hub flange. Rotate the hub to align each wheel mounting stud with the notch in the bearing retainer plate before removal. Using Remover, Special Tool C–4150A (Fig. 27), press the three wheel mounting studs out of the hub flange. Remove the wheel mounting studs from the hub through the open notch (Fig. 28).

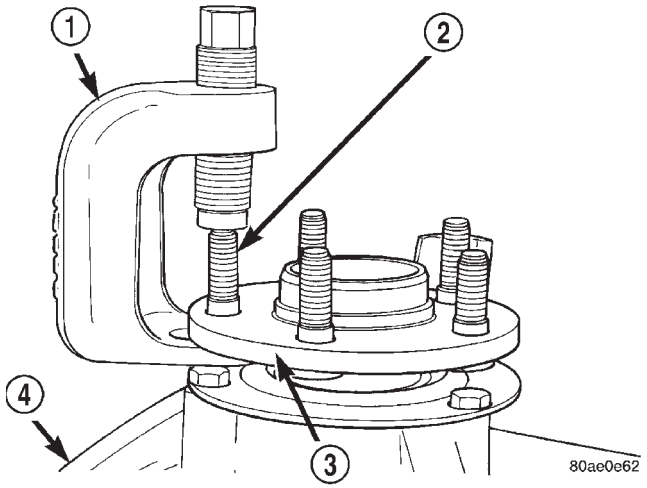

Fig. 27 Special Tool C–4150A

1 – SPECIAL TOOL 4150A
2 – WHEEL MOUNTING STUD
3 – HUB FLANGE
4 – STEERING KNUCKLE

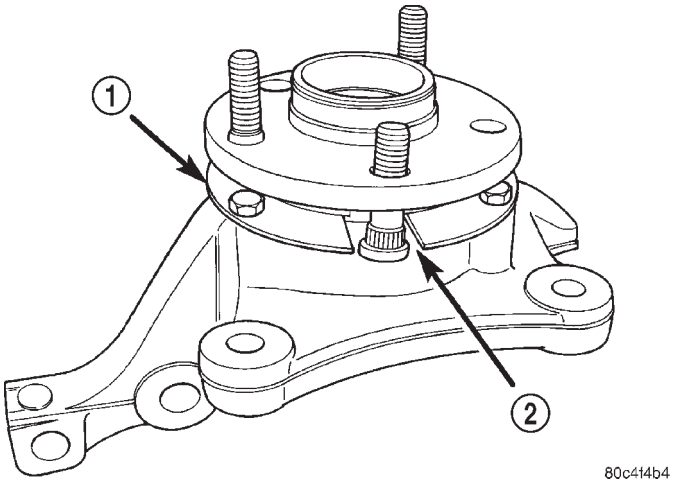

Fig. 28 Stud Removal From Hub

1 – BEARING RETAINER PLATE
2 – NOTCH

(3) Rotate the hub so the stud mounting holes in the hub are facing in the direction shown in the figure (Fig. 29).

(4) Install the Bearing Splitter, Special Tool 1130, between the hub and the bearing retainer plate as shown (Fig. 29). Absence of the three wheel mounting studs allows the bearing splitter to be installed behind the flange. Hand tighten the nuts to hold bearing splitter in place on steering knuckle.

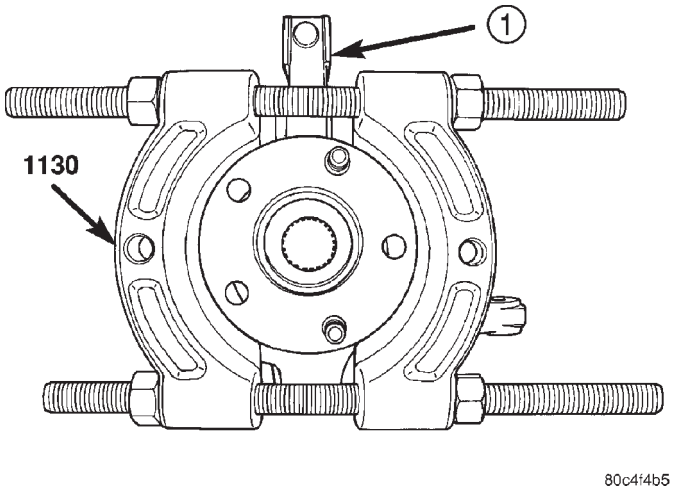

Fig. 29 Bearing Splitter 1130 Installed

1 – KNUCKLE

(5) Place the steering knuckle face down in an arbor press supported by the bearing splitter as shown (Fig. 30).

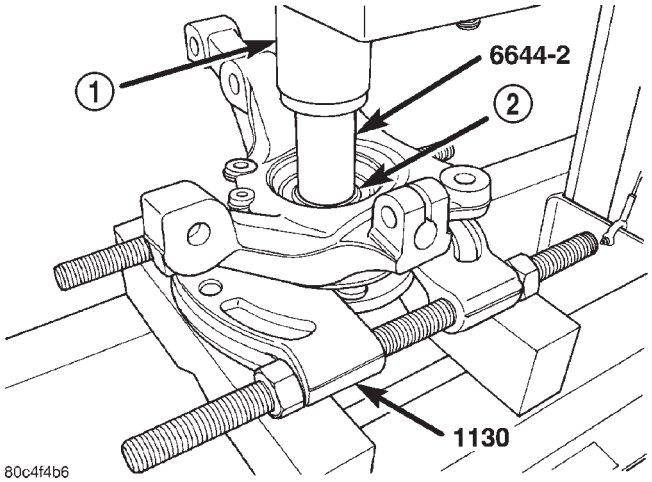

Fig. 30 Steering Knuckle Positioned For Hub Removal

1 – PRESS RAM
2 – HUB

(6) Position Remover/Installer, Special Tool 6644-2, on the small end of the hub (Fig. 30). Using the arbor press, remove the hub from the wheel bearing. The bearing race will normally come out of the wheel bearing with the hub as it is pressed out of the bearing.

DISASSEMBLY AND ASSEMBLY (Continued)

(7) Remove the bearing splitter from the steering knuckle.

(8) Remove the three bolts mounting the bearing retainer plate to the steering knuckle (Fig. 31). Remove the bearing retainer plate from the steering knuckle.

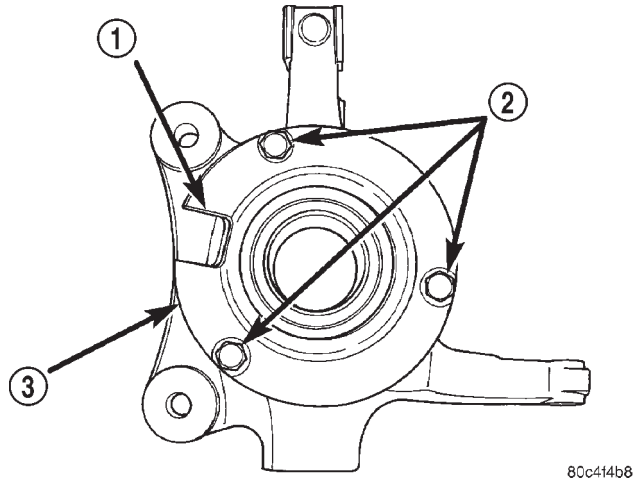

Fig. 31 Wheel Bearing Retainer Plate

1 – NOTCH
2 – BOLTS
3 – BEARING RETAINER PLATE

(9) Place the steering knuckle back in the arbor press face down as shown (Fig. 32). The press support blocks must not obstruct the bearing while it is being pressed out of the steering knuckle.

(10) Place Remover/Installer, Special Tool MB-990799 on the outer race of the wheel bearing (Fig. 32). Press the wheel bearing out of the steering knuckle.

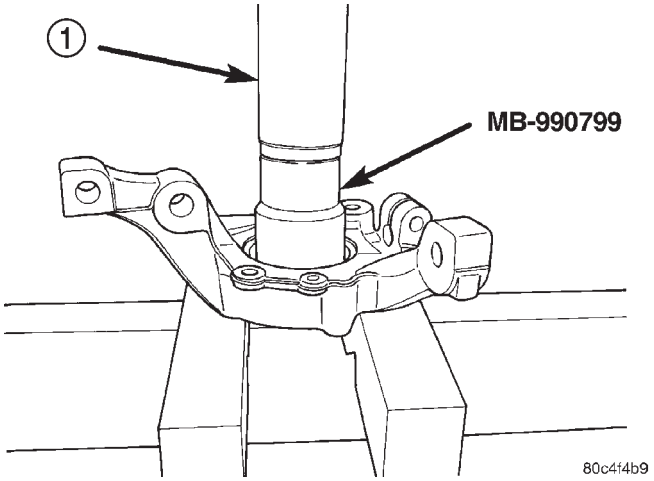

Fig. 32 Wheel Bearing Removal

1 – PRESS RAM

(11) Remove the bearing race that is still pressed onto the hub. To do so, install Bearing Splitter, Special Tool 1130, between the hub flange and the bearing race (Fig. 33). Place the hub, bearing race and bearing splitter in an arbor press as shown (Fig. 33). Place Remover/Installer, Special Tool 6644-2 on end of hub. Press the hub out of the bearing race.

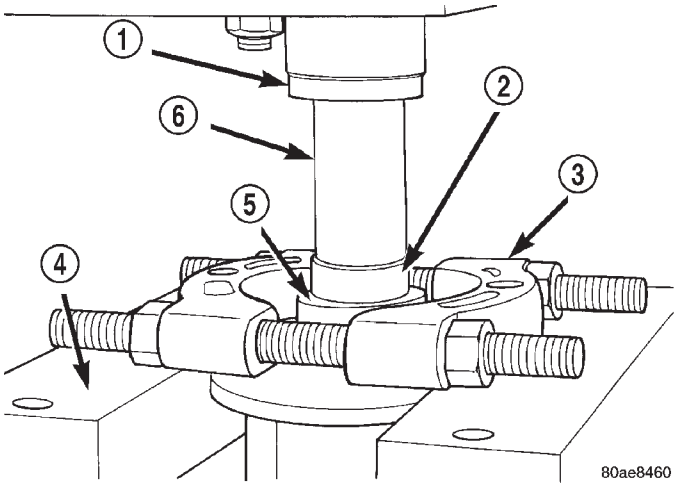

Fig. 33 Bearing Race Removal From Hub

1 – ARBOR PRESS
2 – HUB
3 – SPECIAL TOOL 1130
4 – PRESS BLOCKS (2)
5 – BEARING RACE
6 – SPECIAL TOOL 6644–2

ASSEMBLY

(1) Wipe the bore of the steering knuckle clean of any grease or dirt with a clean, dry shop towel.

(2) Place the steering knuckle in an arbor press with Installer, Special Tool C-4698-2, supporting the steering knuckle (Fig. 34).

(3) Place the NEW wheel bearing into the bore of the steering knuckle. Be sure the wheel bearing is placed squarely into the bore.

(4) Place Installer, Special Tool 5052, on the outer race of the wheel bearing (Fig. 34). Press the wheel bearing into the steering knuckle until it is fully bottomed in the bore of the steering knuckle.

(5) Remove the knuckle from the press.

NOTE: Use only the original or identical replacement bolts to mount the bearing retainer plate to the steering knuckle.

DISASSEMBLY AND ASSEMBLY (Continued)

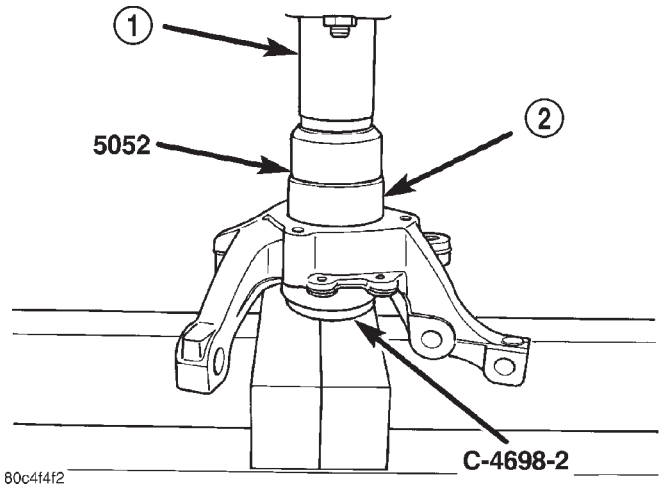

Fig. 34 Wheel Bearing Installation

1 – PRESS RAM
2 – BEARING

(6) Noting the notch location, install the bearing retainer plate on the steering knuckle as shown (Fig. 31). Install the three bearing retainer mounting bolts. Tighten the bearing retainer plate mounting bolts to a torque of 28 N·m (250 in. lbs.).

(7) Install the previously removed wheel mounting studs back into the hub flange. To do so:

(a) Place the studs in the three holes in the hub flange.

(b) Place the hub in the arbor press supported by Special Tool C-4698-1, allowing the first stud to extend down into the tool (Fig. 35).

(c) Press the wheel mounting stud into the hub flange until it is fully seated against the back side on the hub flange.

(d) Remove the hub and tool from the press.

(e) Repeat the steps (b), (c) and (d) on the remaining two studs.

(8) Place the steering knuckle with the wheel bearing installed back in the arbor press with the smaller end of Remover/Installer, Special Tool MB-990799, supporting the inner race of the wheel bearing as shown (Fig. 36).

(9) Place the hub in the wheel bearing making sure it is square with the bearing inner race (Fig. 36). Press the hub into the wheel bearing until it is fully bottomed in the wheel bearing.

(10) Remove the steering knuckle and tools from the press.

(11) Verify the hub turns smoothly without rubbing or binding.

(12) Install the steering knuckle on the vehicle.

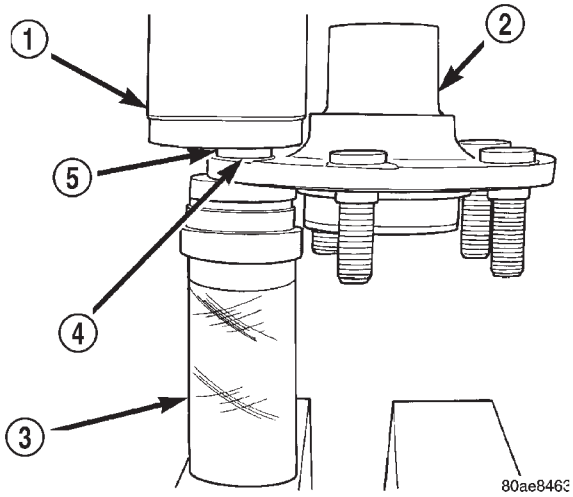

Fig. 35 Wheel Mounting Stud Installation

1 – ARBOR PRESS RAM
2 – HUB
3 – SPECIAL TOOL C-4698–1
4 – NO GAP IS ALLOWED BETWEEN STUD FLANGE AND HUB HERE
5 – WHEEL MOUNTING STUD

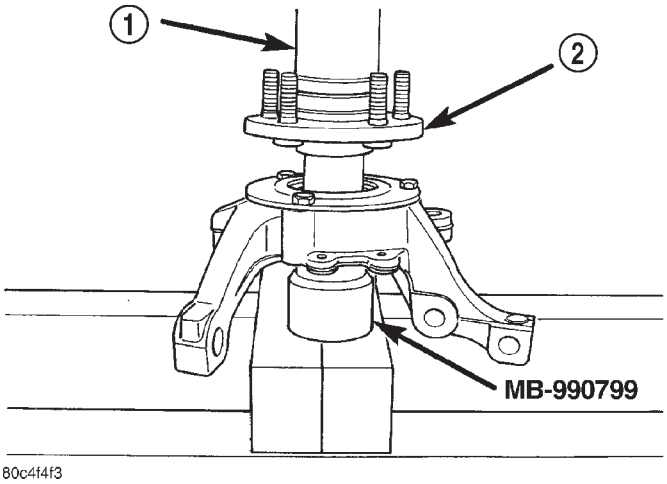

Fig. 36 Hub Installation

1 – PRESS RAM
2 – HUB

LOWER CONTROL ARM (BALL JOINT)

NOTE: The removal and installation of the lower ball joint from the lower control arm is to be done with the lower control arm removed from the vehicle. Refer to LOWER CONTROL ARM in the REMOVAL AND INSTALLATION section.

DISASSEMBLY AND ASSEMBLY (Continued)

DISASSEMBLY

(1) Using a screwdriver or other suitable tool, pry the seal boot off of the ball joint (Fig. 37).

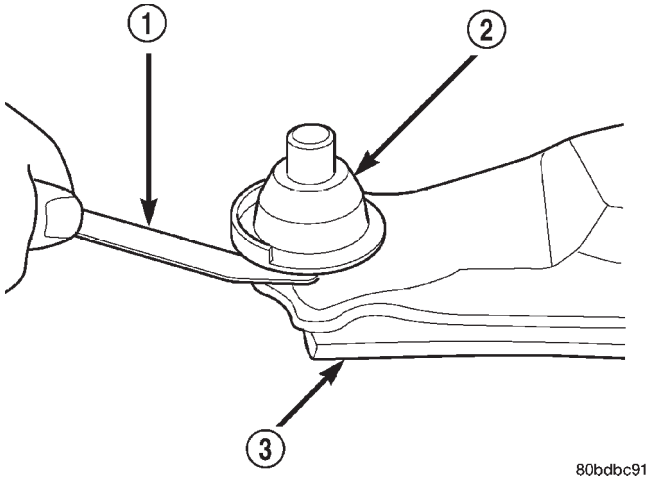

Fig. 37 Seal Boot Removal

1 – TOOL
2 – SEAL BOOT
3 – LOWER CONTROL ARM

(2) Position the Receiver, Special Tool 6908-2, on a hydraulic press to support the lower control arm (Fig. 38). Place the control arm on top of Tool 6908-2 so that the bottom of the ball joint sets into the Receiver cup.

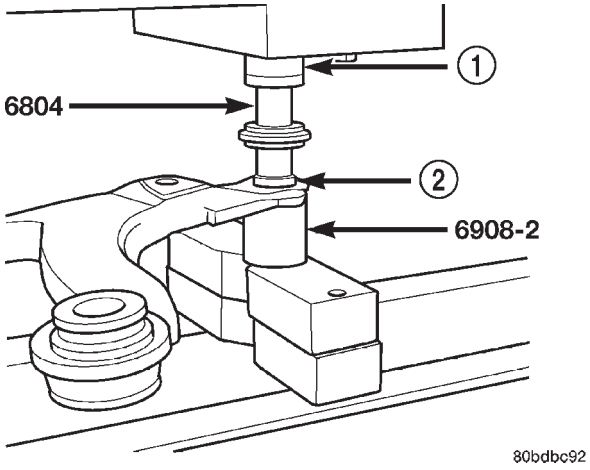

Fig. 38 Ball Joint Removal

1 – PRESS
2 – BALL JOINT

(3) Place the larger end of the Adapter, Special Tool 6804, on top of the ball joint as shown (Fig. 38).

(4) Using the hydraulic press, press the ball joint completely out of the lower control arm, into the receiver.

(5) Remove the tools, ball joint and arm from the hydraulic press.

ASSEMBLY

CAUTION: When installing a ball joint in its mounting hole in the lower control arm, position the ball joint so the notch in the ball joint stud is facing the lower control arm front isolator bushing (Fig. 39). This will ease assembly of the ball joint to the steering knuckle when the installation of the pinch bolt is attempted.

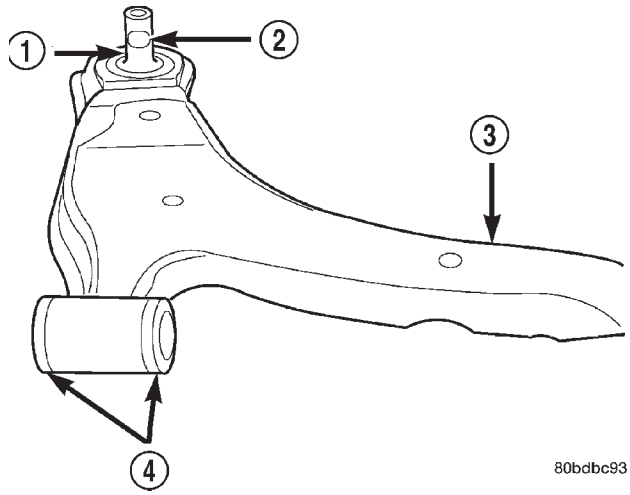

Fig. 39 Ball Joint Alignment

1 – BALL JOINT STUD
2 – NOTCH
3 – LOWER CONTROL ARM
4 – FRONT ISOLATOR BUSHING

(1) By hand, position ball joint into it's bore on the lower control arm (Fig. 39). To avoid binding upon installation, be sure the ball joint is not cocked in the bore.

(2) Position the Installer, Special Tool 6758, on a hydraulic press to support the lower control arm (Fig. 40). Place the control arm on top of Tool 6758 in the upside-down position, aligning the ball joint stud squarely with the Installer's cup.

(3) Place the larger end of the Adapter, Special Tool 6804, on top of the ball joint as shown (Fig. 40).

(4) Using the hydraulic press, press the ball joint into the lower control arm until the shoulder on the ball joint bottoms against the lower control arm ball joint bore. Do not apply excessive pressure against ball joint and lower control arm once the ball joint bottoms.

(5) Remove the tools and arm from the hydraulic press.

CAUTION: When installing the sealing boot on the ball joint, position the upward lip on the outside perimeter of the seal boot outward, away from the control arm once installed (Fig. 41). It is there to help shield heat from the sealing boot.

DISASSEMBLY AND ASSEMBLY (Continued)

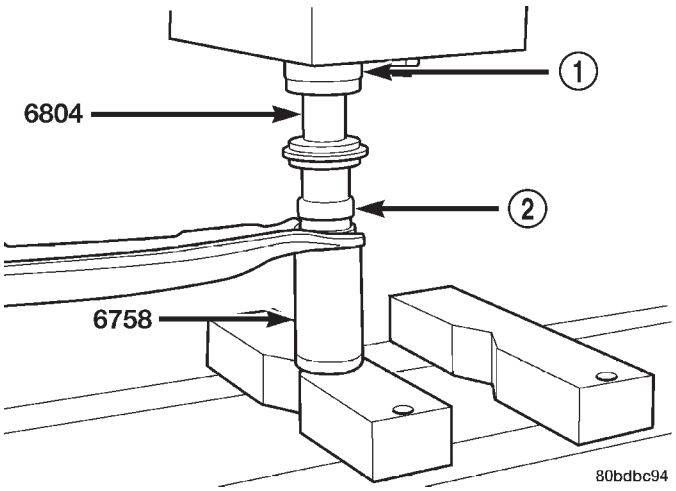

Fig. 40 Ball Joint Installation

1 – PRESS
2 – BALL JOINT

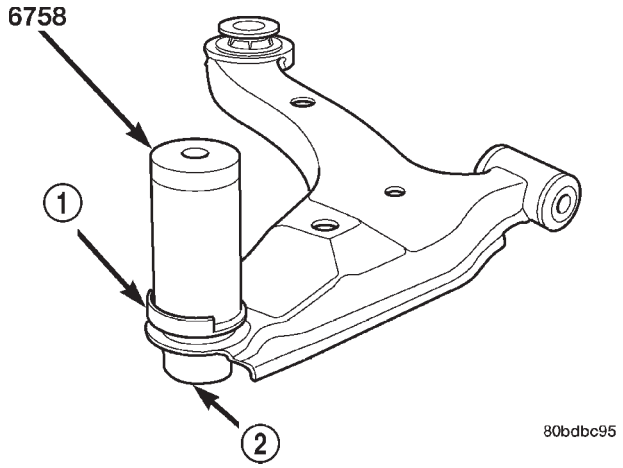

Fig. 41 Seal Boot Installation

1 – SEAL BOOT UPWARD LIP
2 – BALL JOINT

(6) Place a new ball joint seal boot over the ball joint stud. The upward lip located on the outside perimeter of the seal boot must point outward away from the control arm once installed (Fig. 41). Start the sealing boot over the sides of the ball joint by hand.

(7) Position the Installer, Special Tool 6758, over the sealing boot outer diameter as shown (Fig. 41). By hand, apply pressure to the top of the Installer until the seal boot is pressed squarely down against the top surface of lower control arm.

(8) Remove the tool.

(9) Install the lower control arm on the vehicle. Refer to LOWER CONTROL ARM in the REMOVAL AND INSTALLATION section.

NOTE: If the ball joint is equipped with a lubeable grease fitting, the joint will need to be lubricated once the lower control arm installation is complete.

LOWER CONTROL ARM (REAR ISOLATOR BUSHING)

NOTE: The removal and installation of the rear isolator bushing from the lower control arm is only to be done with the lower control arm removed from the vehicle. Refer to LOWER CONTROL ARM in the REMOVAL AND INSTALLATION section. The front isolator bushing is not serviceable.

DISASSEMBLY

(1) Install the Remover Receiver, Special Tool 8373-1, into the cup of the Ball Joint Press, Special Tool C-4212F, and tighten the set screw. Install the Remover Driver, Special Tool 8373-2, on the tip of the Ball Joint Press screw-drive.

(2) Place the lower control arm outer flange against the Receiver as shown (Fig. 42). Tighten the screw-drive until the Driver contacts the outer circumference of the bushing evenly (Fig. 42). Continue to tighten the screw-drive until the bushing is pressed completely out of the lower control arm.

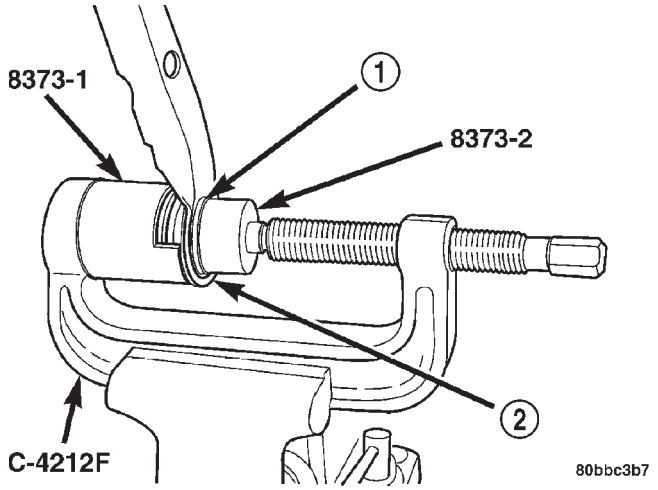

Fig. 42 Removing Bushing

1 – CONTROL ARM ISOLATOR BUSHING
2 – FLANGE

(3) Back off the screw-drive and remove the lower control arm and isolator bushing from the Receiver.

(4) Remove the driver 8373-2 and receiver 8373-1 from the ball joint press C-4212F.

DISASSEMBLY AND ASSEMBLY (Continued)

ASSEMBLY

(1) Back the ball joint press C-4212F set screw outward so it does not extend out into the cup area (Fig. 43).

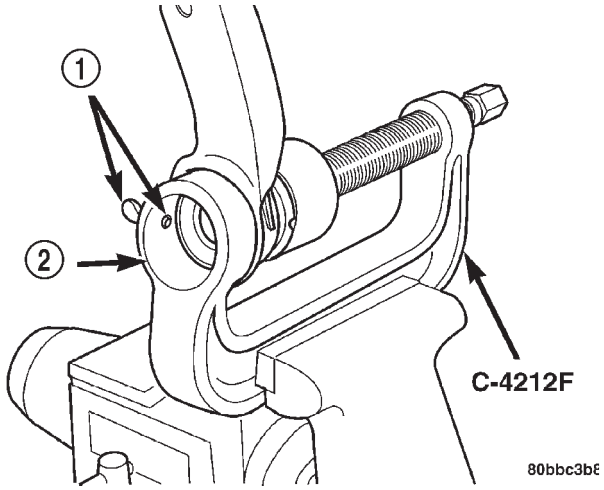

Fig. 43 Set Screw Backed Outward

1 – SET SCREW
2 – CUP AREA

(2) Start the bushing in the lower control arm bushing bore by hand. Position the bushing so the voids in the rubber are aligned in relationship to the ball joint as shown (Fig. 44). Place the larger void toward the ball joint.

(3) Install the Receiver, Special Tool 6760, on the tip of the Ball Joint Press screw drive.

(4) Place the lower control arm flange against the cup area of the ball joint press and tighten the screw-drive until the Receiver contacts the outer circumference of the bushing (Fig. 45). Slowly tighten the screw-drive until the bushing bottoms in the lower control arm bushing bore.

(5) Back off the Ball Joint Press screw-drive and remove the power steering gear from the press.

(6) Install the lower control arm on the vehicle.

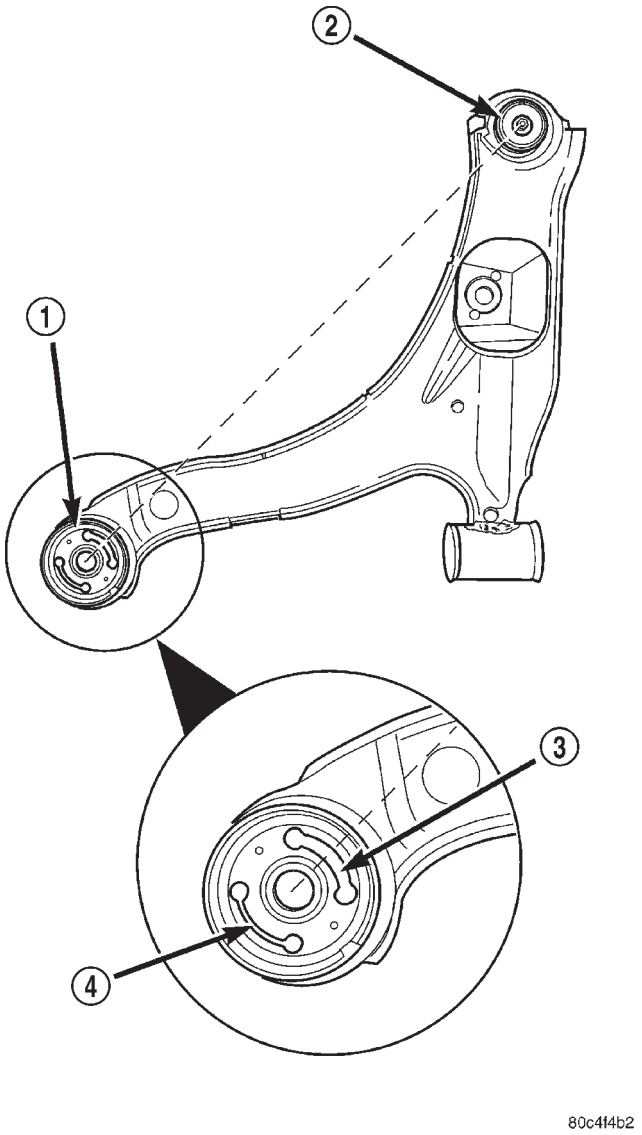

Fig. 44 Aligning Bushing With Ball Joint

1 – REAR ISOLATOR BUSHING
2 – BALL JOINT
3 – WIDE VOID
4 – NARROW VOID

DISASSEMBLY AND ASSEMBLY (Continued)

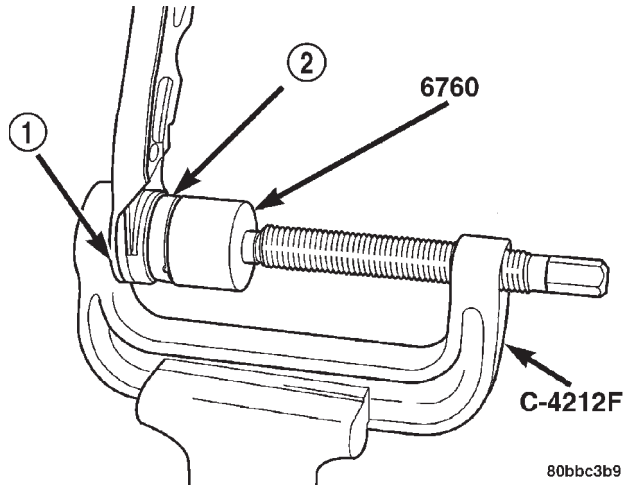

Fig. 45 Installing Bushing

1 – LOWER CONTROL ARM FLANGE
2 – ISOLATOR BUSHING

SPECIFICATIONS

FRONT SUSPENSION FASTENER TORQUE

DESCRIPTION	TORQUE
Lower Control Arm:	
Front Pivot Bolt	163 N·m (120 ft. lbs.)
Rear Pivot Bolt	250 N·m (185 ft. lbs.)
Stabilizer Bar:	
Cushion Retainer Bolts	28 N·m (250 in. lbs.)
Link Nut	28 N·m (250 in. lbs.)
Steering Knuckle:	
Ball Joint Stud Pinch Bolt Nut	95 N·m (70 ft. lbs.)
Bearing Retainer Plate Bolts	28 N·m (250 in. lbs.)
Hub Nut	244 N·m (180 ft. lbs.)
Tie Rod Adjusting Jam Nut	75 N·m (55 ft. lbs.)
Tie Rod End Steering Knuckle Nut	54 N·m (40 ft. lbs.)
Wheel Mounting Nuts	135 N·m (100 ft. lbs.)
Strut Assembly:	
Tower Nuts	34 N·m (25 ft. lbs.)
Steering Knuckle Nuts	54 N·m (40 ft. lbs.) + 90° Turn
Strut Shaft Nut	75 N·m (55 ft. lbs.)

SPECIAL TOOLS

FRONT SUSPENSION

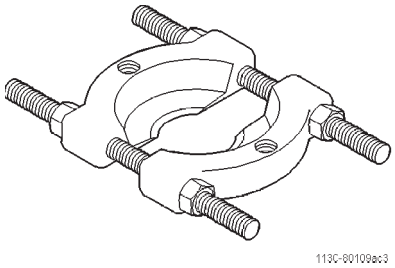

Splitter, Bearing 1130

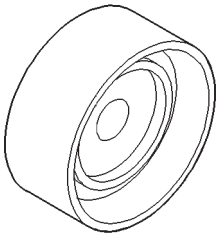

Installer, Bearing 5052

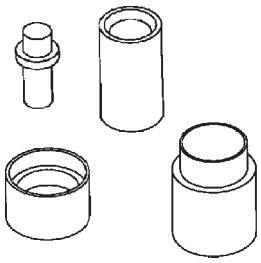

Remover/Installer 6644 (-2)

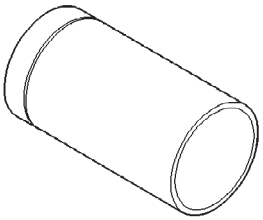

Installer 6758

SPECIAL TOOLS (Continued)

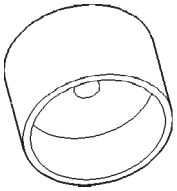

Installer 6760

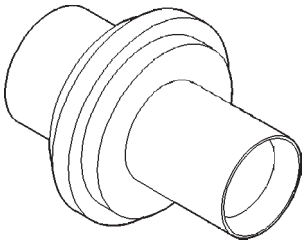

Remover 6804

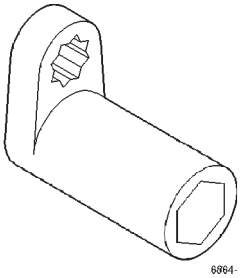

Socket/Wrench Strut Nut 6864

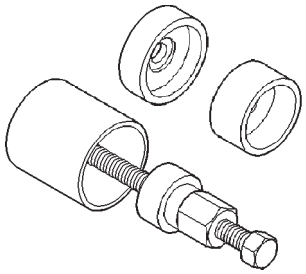

Remover/Installer 6908 (–2)

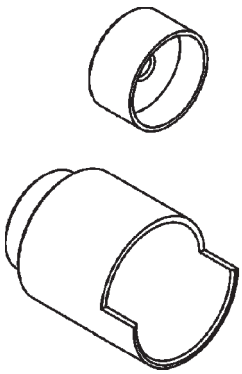

Remover/Installer 8373

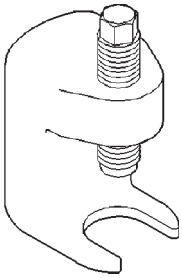

Remover C-4150A

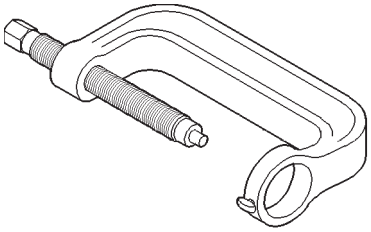

Press, Ball Joint C-4212F

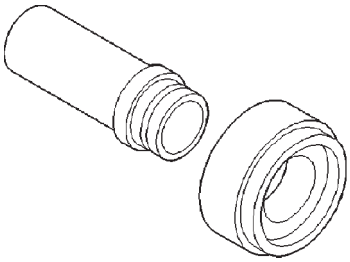

Installer Adapter C-4698-2

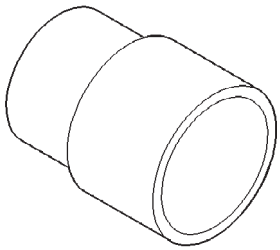

Remover MB-990799

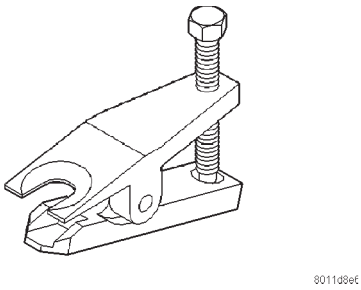

Remover MB991113

REAR SUSPENSION

TABLE OF CONTENTS

page

DESCRIPTION AND OPERATION
REAR SUSPENSION SYSTEM 37
AXLE 37
COIL SPRING 38
HUB AND BEARING (REAR) 39
JOUNCE BUMPER 39
SHOCK ABSORBER 39
SPINDLE 39
STABILIZER BAR (REAR) 40
WATTS LINK ASSEMBLY 41
DIAGNOSIS AND TESTING
AXLE 41
COIL SPRING 42
HUB AND BEARING (REAR) 42
SHOCK ABSORBER 42
STABILIZER BAR (REAR) 42
WATTS LINK ASSEMBLY 42
REMOVAL AND INSTALLATION
SERVICE WARNINGS AND CAUTIONS 43
AXLE 43
AXLE PIVOT BUSHING 53
COIL SPRING 56
HUB AND BEARING (REAR) 59
JOUNCE BUMPER 60
SHOCK ABSORBER 61
SPINDLE 61
STABILIZER BAR (REAR) 63
STABILIZER BAR CUSHIONS (REAR) 64
STABILIZER BAR LINK (REAR) 65
WATTS BELL CRANK 65
WATTS LINK 65
WHEEL MOUNTING STUDS (REAR) 67
SPECIFICATIONS
REAR SUSPENSION FASTENER TORQUE 69
SPECIAL TOOLS
REAR SUSPENSION 70

DESCRIPTION AND OPERATION

REAR SUSPENSION SYSTEM

DESCRIPTION

The rear suspension design on this vehicle uses coil springs mounted above a twist beam axle assembly (Fig. 1).

The rear suspension consists of these major components:

- Axle
- Coil spring (2)
- Hub and bearing (2)
- Jounce bumper (2)
- Shock absorber (2)
- Spindle (2)
- Stabilizer bar (Fig. 2)
- Watts link assembly

Refer to individual components for additional information.

OPERATION

The rear suspension is designed to handle the various load requirements of the vehicle. As the vehicle moves along traversing bumps and dips, the suspension moves up and down to compensate, allowing for a comfortable, steady ride.

Refer to individual components for additional information.

AXLE

DESCRIPTION

The steel rear axle on this vehicle is a twist beam design (Fig. 1). It has a tubular torsion tube running through the center of its width. It also has two trailing arms, one extending from each end of the axle forward. Each trailing arm has a rubber pivot bushing pressed into it. Two coil spring perches are mounted to its top surface in line with the rear wheel center.

DESCRIPTION AND OPERATION (Continued)

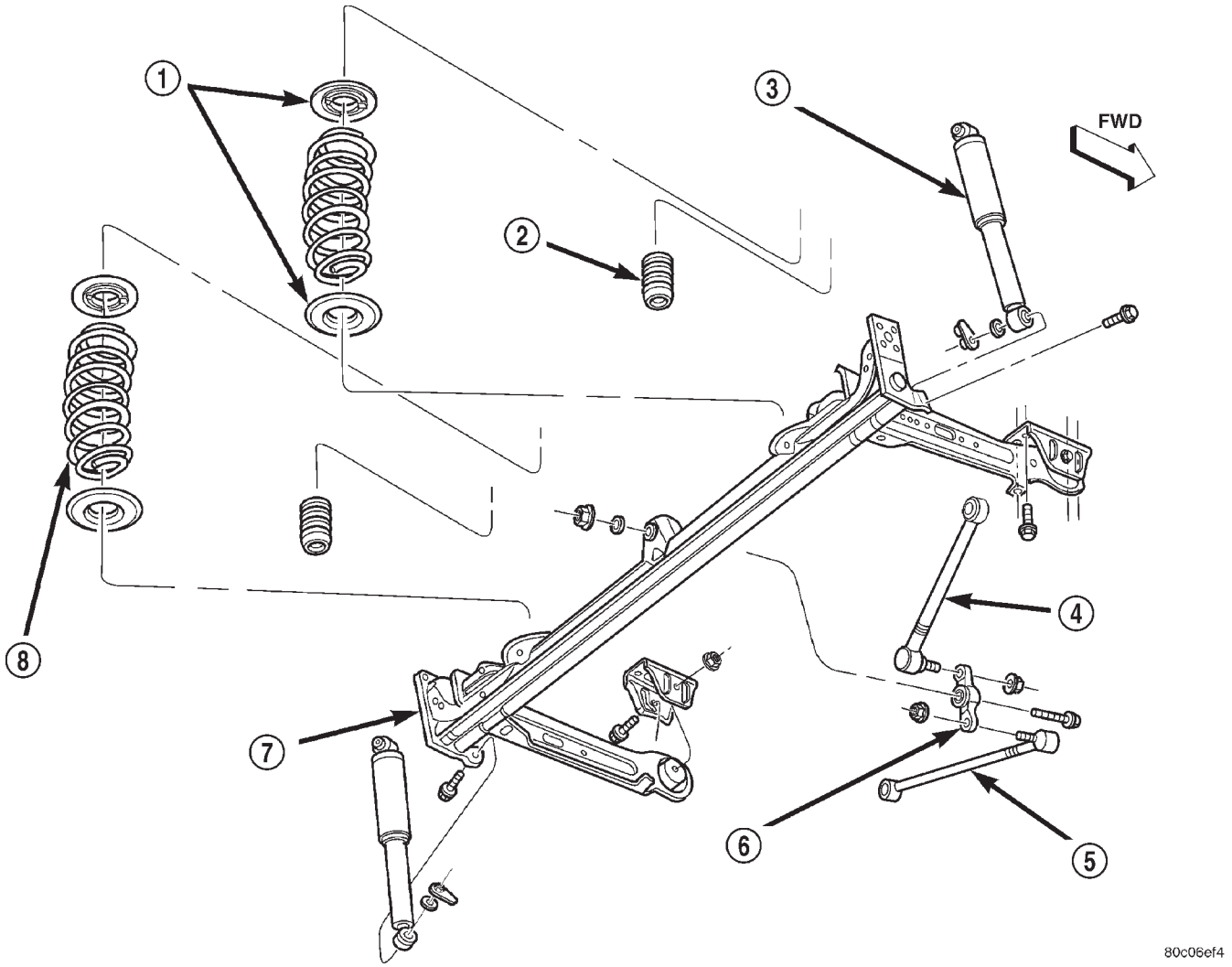

Fig. 1 Rear Suspension System

1 – ISOLATORS
2 – JOUNCE BUMPER
3 – SHOCK ABSORBER
4 – WATTS LINK (UPPER)
5 – WATTS LINK (LOWER)
6 – BELL CRANK
7 – AXLE
8 – COIL SPRING

OPERATION

The rear axle pivots at the forward end of the trailing arms through the bushings. Coil springs mounted on top of the axle support the trailing end. As the rear wheels attached to each end of the axle (through spindles) move over bumps and dips, the axle moves with the wheels, pivoting at the front while exerting varying force against the coil springs.

The torsion tube running through the center of the axle's width acts as an integral tubular stabilizer bar. Jounce and rebound movements affecting one rear wheel are partially transferred to the opposite wheel to help stabilize body roll.

COIL SPRING

DESCRIPTION

The springs used on the rear suspension of this vehicle are the coil type (Fig. 1). They are mounted straight above the rear axle beam in line with the rear wheels. A spring isolator is attached to each end of the coil springs.

Coil springs come in various heights, be sure the correct spring is in use.

DESCRIPTION AND OPERATION (Continued)

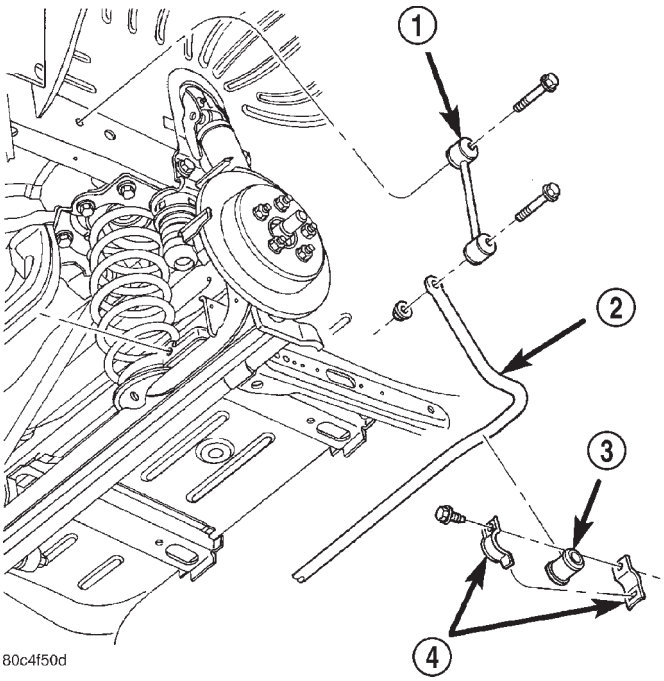

Fig. 2 Stabilizer Bar

1 – LINK
2 – STABILIZER BAR
3 – CUSHION
4 – RETAINER

OPERATION

The coil spring controls ride quality and maintains ride height. Being mounted in line with rear wheel center helps minimize ride shake. The isolators on each end of the springs help reduce road noise transmission.

HUB AND BEARING (REAR)

DESCRIPTION

The rear wheel bearing and wheel mounting hub used on this vehicle are a one-piece sealed unit or hub and bearing assembly. It is permanently lubricated when assembled and is sealed for life. There is no periodic lubrication or maintenance recommended for these units.

The hub and bearing is mounted on the spindle which is bolted to the axle (Fig. 3). The hub and bearing is secured to the spindle using a special nut.

Vehicles equipped with antilock brakes have rear hub and bearings with the tone wheel for the rear wheel speed sensors pressed onto the hub.

The only serviceable components of the hub and bearing are the wheel mounting studs pressed into the hub.

OPERATION

The hub and bearing adapts the tire and wheel assembly to the axle mounted spindle. It's bearing allows the tire and wheel assembly to rotate freely on the vehicle. The brake drum or brake rotor mounts to the hub's wheel mounting studs aiding in stopping the vehicle when required.

On vehicles equipped with antilock brakes, the tone wheel pressed onto the hub allows the brake system to sense wheel motion.

JOUNCE BUMPER

DESCRIPTION

There are two jounce bumpers used in the rear suspension. One mounts to a bracket on each frame rail above the rear axle (Fig. 1).

OPERATION

The jounce bumper limits suspension travel and metal-to-metal contact of the rear axle with the frame under full jounce conditions.

SHOCK ABSORBER

DESCRIPTION

There is one gas-charged shock absorber on each side of the rear suspension (Fig. 4). The top of each shock absorber is bolted to a bracket attached to the body of the vehicle. The bottom of each shock absorber is bolted to the rear axle.

OPERATION

The shock absorber dampens jounce and rebound motions of the coil spring and suspension.

SPINDLE

DESCRIPTION

A forged rear spindle is mounted to each side of the rear suspension axle (Fig. 3). Each spindle attaches to the axle using four mounting bolts. The four mounting bolts also mount the drum brake support plate (drum brakes) or disc brake adapter (disc brakes) to the axle. The hub and bearing rides on the spindle.

OPERATION

The spindle moves up and down with the tire and wheel under jounce and rebound conditions.

The spindle acts as a mount for the rear hub and bearing, and rear brakes.

DESCRIPTION AND OPERATION (Continued)

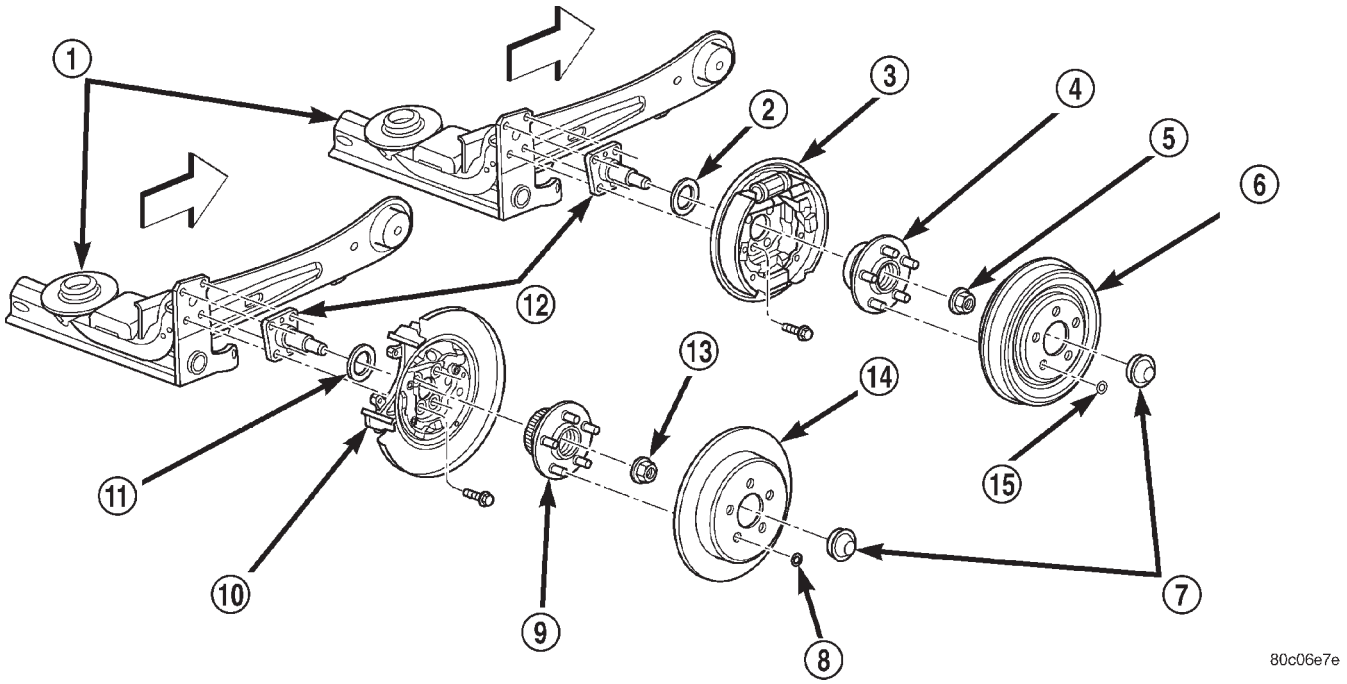

Fig. 3 Component Mounting

1 – AXLE
2 – SEAL
3 – DRUM BRAKE WITH SUPPORT PLATE
4 – HUB AND BEARING
5 – HUB NUT
6 – BRAKE DRUM
7 – DUST CAP
8 – RETAINER CLIP
9 – HUB AND BEARING
10 – DISC BRAKE ADAPTER
11 – SEAL
12 – SPINDLE
13 – HUB NUT
14 – BRAKE ROTOR
15 – RETAINER CLIP

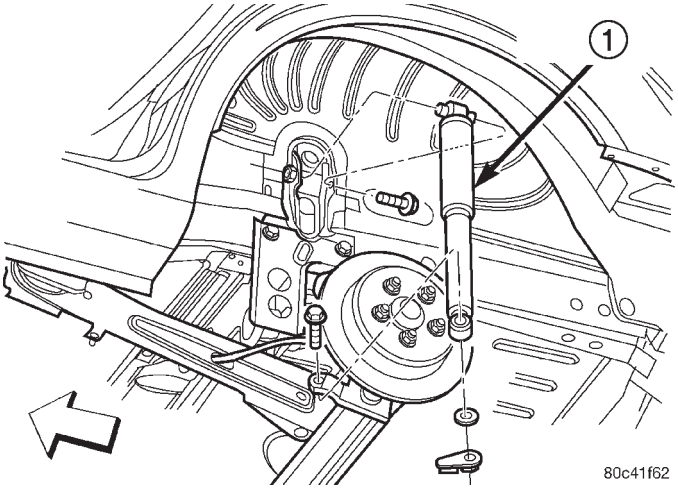

Fig. 4 Shock Absorber

1 – SHOCK ABSORBER

STABILIZER BAR (REAR)

DESCRIPTION

A stabilizer bar interconnects the rear axle with the frame rails of the vehicle (Fig. 5).

Attachment of the stabilizer bar to the rear frame rails of the vehicle is through 2 rubber-isolator stabilizer bar links. The stabilizer bar attachment to the axle is done utilizing two rubber isolated cushions and retainers.

OPERATION

Jounce and rebound movements affecting one side of the rear suspension are partially transmitted to the opposite side of the rear suspension to stabilize body roll.

DESCRIPTION AND OPERATION (Continued)

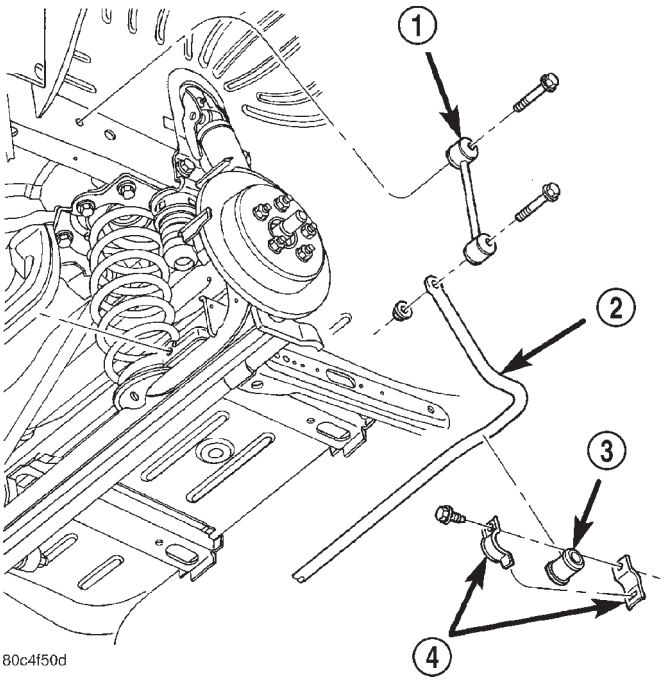

Fig. 5 Stabilizer Bar And Components (Right Side Shown)

1 – LINK
2 – STABILIZER BAR
3 – CUSHION
4 – RETAINER

WATTS LINK ASSEMBLY

DESCRIPTION

The watts link assembly consists of a bell crank mounted to the rear axle and two links extending from the bell crank to brackets mounted to the body of the vehicle (Fig. 1).

The cast iron bell crank has a non-serviceable sealed-for-life bearing mounted in the center of it through which it is fastened to the axle. It also has the words “BACK UP” cast into one side of it indicating the installation direction when mounted to the axle (Fig. 6). Although the pivot may look identical end to end, it is not and must be installed with the words “BACK UP” toward the back of the vehicle facing upright in order to avoid premature bearing failure.

The upper and lower links both have ball joints on one end and bushings on the other. The ball joint ends connect to the bell crank and the bushing ends connect to a bracket on the body. The upper link extends from the upper hole machined into the bell crank to the bracket on the right side of the vehicle. The lower link extends from the lower hole machined into the bell crank to the bracket on the left side of the vehicle. Although the links look like outer tie rods, no attempt should be made to adjust them.

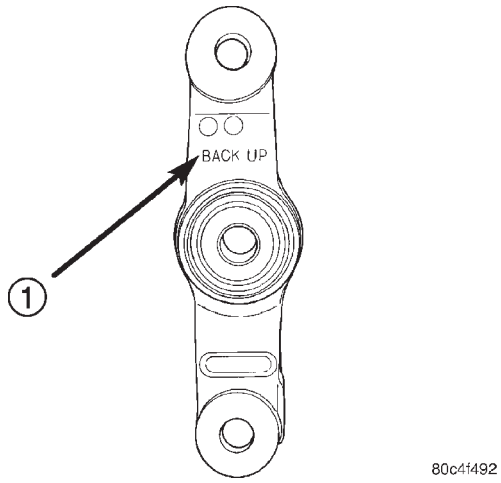

Fig. 6 Bell Crank

1 – INSTALLATION DIRECTION

They are fixed to a set length at the factory and require no maintenance. The bushings on the links are not serviceable.

OPERATION

The watts link assembly serves the same purpose as a track bar. That is, it is used to control rear axle lateral movement and provides cross-car location of the axle. Unlike a track bar, the watts link assembly offers more consistent handling and stability at varying suspension heights, either lightly loaded or fully laden. As the suspension lowers or raises, the watts link assembly compensates by rotating the bell crank in the desired direction. This rotation simulates shortening or lengthening of the links. Since there is one link on each side, the change affects each side of the suspension evenly.

DIAGNOSIS AND TESTING

AXLE

Verify proper torque of all axle fasteners.

Inspect the axle looking for damage or bending. If damage is evident, the axle must be replaced.

Inspect for broken or cracked welds at each end of the twist beam within the axle. Inspect for broken or cracked welds at each axle trailing arm bushing bore. If a problem is present, the axle must be replaced.

Inspect the bushings at the leading ends of the axle trailing arms. Look for damage or deterioration of the bushings. Make sure the bushings are centered side-to-side in their bore. If a problem exists, the bushings must be replaced. They can be replaced separately from the axle.

DIAGNOSIS AND TESTING (Continued)

COIL SPRING

Inspect the coil spring for damage. Make sure the outer coating is not damaged, leaving the bare coil exposed. If damage is present, replace the spring.

Inspect the upper and lower spring isolators for signs of damage or deterioration. Replace as necessary.

If vehicle height is not within specifications, compare the parts tag on the suspect coil spring(s) to the parts book or sales code, looking for a match. If necessary, remove the coil spring and compare the coil spring height to a correct new or known good correct coil spring. Spring height should vary if the suspect spring is weak. Replace as necessary.

HUB AND BEARING (REAR)

The hub and bearing is designed for the life of the vehicle and requires no type of periodic maintenance. The following procedure may be used for diagnosing the condition of the hub and bearing.

With the wheel, disc brake rotor or brake drum removed, rotate the hub. Any roughness or resistance to rotation may indicate dirt intrusion or a failed hub bearing. If the bearing exhibits any of these conditions during diagnosis, the hub and bearing will require replacement. The bearing is not serviceable alone.

Damaged bearing seals and the resulting excessive grease loss may also require hub and bearing replacement. Moderate grease weapage from the bearing is considered normal and should not require replacement of the wheel bearing.

To diagnose a bent hub, refer to BRAKE ROTOR in the DIAGNOSIS AND TESTING section in the BRAKES service manual group for the procedure on measuring hub runout.

SHOCK ABSORBER

Inspect the shock absorber for damage and evidence of fluid running from the upper end of the fluid reservoir. (Actual leakage will be a stream of fluid running down the side of the reservoir tube and dripping off lower end of unit). A slight amount of seepage between the shaft and shaft seal is not unusual and does not affect performance of the shock absorber.

STABILIZER BAR (REAR)

Inspect the stabilizer bar and attaching links. Look for damage or bent condition. If damage is evident, the bar must be replaced.

Inspect for broken, cracked, distorted or missing stabilizer bar cushions and cushion retainers. The horizontal slit at the front of each cushion is supposed to be there. If damage is evident, the cushions can be replaced separately from the stabilizer bar utilizing the horizontal slit.

Inspect the stabilizer bar links that attach the stabilizer bar to the vehicle frame. Look for cracked, distorted, deteriorated or missing bushings on the ends of each link. Inspect the stabilizer bar link to ensure it is not bent or broken. If any of these conditions are present, the stabilizer bar link must be replaced. The links can be replaced separately from the stabilizer bar.

WATTS LINK ASSEMBLY

Inspect each link looking for signs of contact with an object that has caused damage to the link. If a link is bent or damaged, replace it. Do not attempt to repair or straighten a watts link.

Verify there is not excessive play in the ball joint end of each link. Check to make sure the ball joint boots are not torn. Verify the stakes are tightly securing the ball joint forging to the link. Replace the links as necessary. Do not attempt to remove the ball joint from a link or re-stake it. Although it may appear so, the ball joints cannot be serviced separately from the watts links.

Inspect the link bushings for signs of damage or deterioration. If damage or deterioration is present, replace the link. The isolator bushings cannot be serviced separately.

Verify the bell crank is installed properly. From the rear of the vehicle, the words “BACK UP” should be able to be read on the upper half of the bell crank extending above the axle. If not, remove the bell crank and remount it correctly. If the bell crank is not correctly mounted, the watts link assembly will not operate properly.

Inspect the bell crank for signs of damage. Inspect for excessive play in the bearing. With the links disconnected, rotate the bell crank. Any roughness or resistance to rotate may indicate dirt intrusion or a failed bearing. If the bell crank exhibits any of these conditions, replace the bell crank.

REMOVAL AND INSTALLATION

SERVICE WARNINGS AND CAUTIONS

WARNING: DUST AND DIRT ACCUMULATING ON BRAKE PARTS DURING NORMAL USE MAY CONTAIN ASBESTOS FIBERS FROM PRODUCTION OR AFTERMARKET LININGS. BREATHING EXCESSIVE CONCENTRATIONS OF ASBESTOS FIBERS CAN CAUSE SERIOUS BODILY HARM. EXERCISE CARE WHEN SERVICING BRAKE PARTS. DO NOT SAND, OR GRIND BRAKE LINING UNLESS EQUIPMENT USED IS DESIGNED TO CONTAIN THE DUST RESIDUE. DO NOT CLEAN BRAKE PARTS WITH COMPRESSED AIR OR BY DRY BRUSHING. CLEANING SHOULD BE DONE BY DAMPENING THE BRAKE COMPONENTS WITH A FINE MIST OF WATER, THEN WIPING THE BRAKE COMPONENTS CLEAN WITH A DAMPENED CLOTH. DISPOSE OF CLOTH AND ALL RESIDUE CONTAINING ASBESTOS FIBERS IN AN IMPERMEABLE CONTAINER WITH THE APPROPRIATE LABEL. FOLLOW PRACTICES PRESCRIBED BY THE OCCUPATIONAL SAFETY AND HEALTH ADMINISTRATION (OSHA) AND THE ENVIRONMENTAL PROTECTION AGENCY (EPA) FOR THE HANDLING, PROCESSING, AND DISPOSITION OF DUST OR DEBRIS THAT MAY CONTAIN ASBESTOS FIBERS.

CAUTION: Only frame contact or wheel lift hoisting equipment can be used on this vehicle. It cannot be hoisted using equipment designed to lift a vehicle by the rear axle. If this type of hoisting equipment is used, damage to rear suspension components will occur.

NOTE: If a rear suspension component becomes bent, damaged or fails, no attempt should be made to straighten or repair it. Always replace it with a new component.

AXLE

WARNING: THE AUTOMATIC ADJUSTING FEATURE OF THIS PARKING BRAKE LEVER CONTAINS A CLOCKSPRING LOADED TO APPROXIMATELY 19 POUNDS. DO NOT RELEASE THE AUTOMATIC ADJUSTER LOCKOUT DEVICE UNLESS THE REAR PARKING BRAKE CABLES AND EQUALIZER ARE CONNECTED TO THE LEVER OUTPUT CABLE. KEEP HANDS OUT OF AUTOMATIC ADJUSTER SECTOR AND PAWL AREA. FAILURE TO OBSERVE CAUTION IN HANDLING THIS MECHANISM COULD LEAD TO SERIOUS INJURY.

WARNING: WHEN REPAIRS TO THE PARKING BRAKE LEVER OR CABLES ARE REQUIRED, THE AUTOMATIC ADJUSTER MUST BE LOADED AND LOCKED OUT TO AVOID POSSIBLE INJURY. THE LEVER ADJUSTMENT MECHANISM CAN BE LOADED AND LOCKED OUT AS OUTLINED IN THIS PROCEDURE.

WARNING: THE AIRBAG SYSTEM IS A COMPLEX ELECTROMECHANICAL UNIT. BEFORE ATTEMPTING TO SERVICE ANY COMPONENT NEAR THE OCCUPANT RESTRAINT CONTROLLER (ORC), FIRST DISCONNECT AND ISOLATE THE BATTERY NEGATIVE CABLE. ALLOW THE SYSTEM CAPACITOR TO DISCHARGE FOR TWO (2) MINUTES. FAILURE TO DO THIS COULD RESULT IN ACCIDENTAL AIRBAG DEPLOYMENT AND POSSIBLE PERSONAL INJURY.

NOTE: Before proceeding with this procedure, review SERVICE WARNINGS AND CAUTIONS at the beginning of REMOVAL AND INSTALLATION in this section.

REMOVAL AND INSTALLATION (Continued)

REMOVAL

(1) Unclip the air cleaner cover (two clips) and move the cover aside.

(2) Disconnect and isolate the battery negative cable from its post on the battery.

(3) Block the tire and wheels so the vehicle does not move once the vehicle parking brake lever is released.

(4) Remove the transmission shift knob as necessary.

(5) Remove the screws attaching the center console, then remove the center console.

(6) Grasp the parking brake lever output cable by hand and pull upward. Continue pulling on the cable until an appropriate sized pin punch (drill bit or locking pin) can be inserted sufficiently through the hole in the left side of the lever mounting bracket (Fig. 7). This will lock the parking brake automatic adjustment mechanism in place and take tension off the parking brake cables. Slowly release the output cable. There should now be slack in the cables.

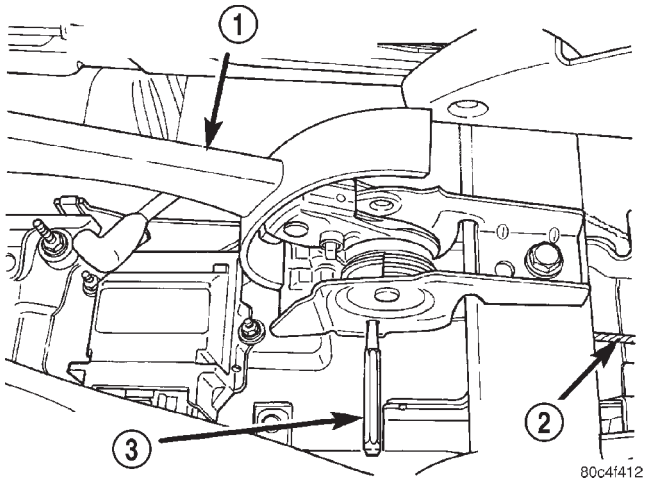

Fig. 7 Pin Punch Installed

1 – PARKING BRAKE LEVER
2 – OUTPUT CABLE
3 – PIN PUNCH

(7) Remove the rear parking brake cables from the parking brake cable equalizer (Fig. 8).

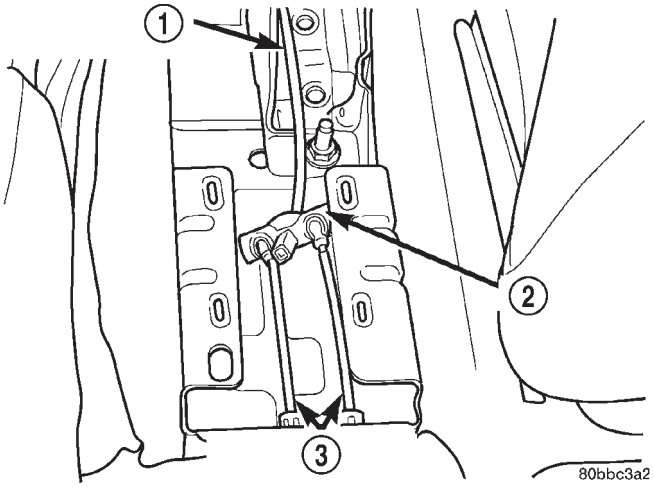

Fig. 8 Parking Brake Cables At Equalizer

1 – LEVER OUTPUT CABLE
2 – EQUALIZER
3 – REAR PARKING BRAKE CABLES

(8) Raise the vehicle. Refer to HOISTING in the LUBRICATION AND MAINTENANCE group for the proper lifting procedure.

(9) Remove both rear tire and wheel assemblies from the vehicle.

(10) On vehicles equipped with rear drum brakes:

(a) Remove the bolts securing the drum brake flex hoses to the axle trailing arms.

(b) Remove the brake drum retaining clips, then the drums (Fig. 9).

(11) On vehicles equipped with rear disc brakes:

(a) Remove the bolts securing the disc brake flex hoses to the axle trailing arms.

(b) Remove the disc brake caliper guide pin bolts, then the calipers from the disc brake adapters (Fig. 10).

(c) Hang the calipers out of the way using a wire hanger or bungee cord.

(d) Remove the brake rotor from the rear hub and bearing.

(12) Remove the dust cap from the rear hub and bearing (Fig. 9).

(13) Remove the hub and bearing retaining nut from the spindle, then remove the hub and bearing (Fig. 9).

REMOVAL AND INSTALLATION (Continued)

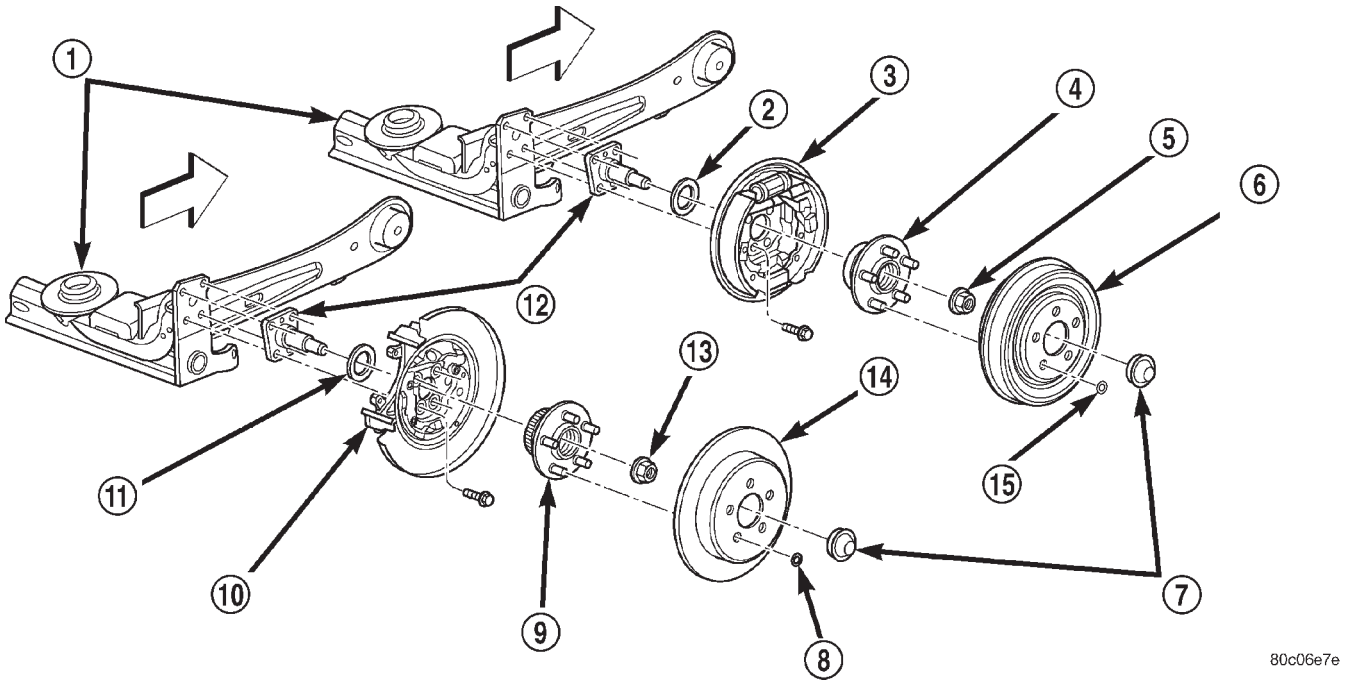

Fig. 9 Rear Brake Mounting To Axle

1 – AXLE
2 – SEAL
3 – DRUM BRAKE WITH SUPPORT PLATE
4 – HUB AND BEARING
5 – HUB NUT
6 – BRAKE DRUM
7 – DUST CAP
8 – RETAINER CLIP
9 – HUB AND BEARING
10 – DISC BRAKE ADAPTER
11 – SEAL
12 – SPINDLE
13 – HUB NUT
14 – BRAKE ROTOR
15 – RETAINER CLIP

REMOVAL AND INSTALLATION (Continued)

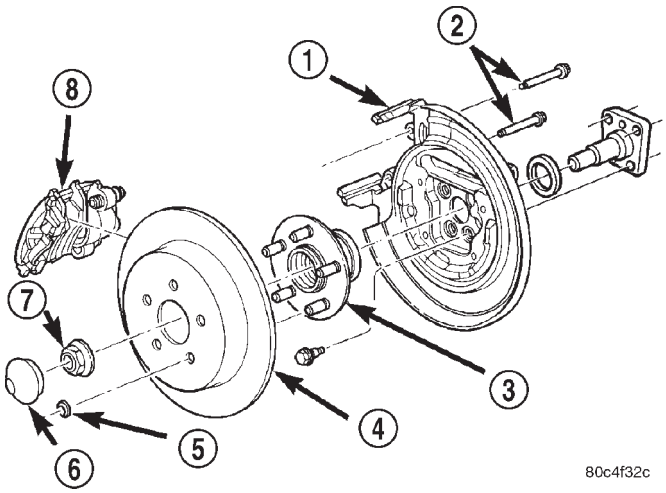

Fig. 10 Rear Disc Brakes

1 – DISC BRAKE ADAPTER
2 – GUIDE PIN BOLTS
3 – HUB AND BEARING
4 – BRAKE ROTOR
5 – RETAINER CLIP
6 – DUST CAP
7 – NUT
8 – DISC BRAKE CALIPER

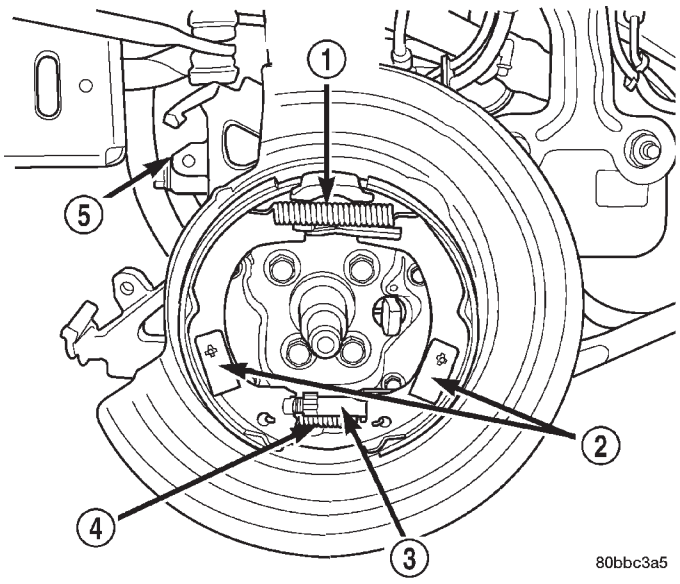

Fig. 11 Parking Brake Shoes

1 – UPPER RETURN SPRING
2 – SHOE HOLD DOWN CLIPS
3 – ADJUSTER
4 – LOWER REAR SPRING
5 – DISC BRAKE ADAPTER

(14) On vehicles equipped with rear disc brakes, remove the upper return spring, both shoe hold-down clips, then spread the rear parking brake shoes apart at the top enough to clear the shoe anchor and remove the parking brake shoes as an assembly from the disc brake adapter (Fig. 11).

(15) On vehicles equipped with rear drum brakes, to remove the parking brake cables from the brake support plates:

(a) Remove the parking brake cable from the parking brake actuating lever (Fig. 12).

(b) Remove the actuating spring between the brake shoe adjustment lever and the brake shoe (Fig. 13).

(c) Remove the parking brake cable from the rear brake support plate. The parking brake cable can be removed from brake support plate using a ½ inch box wrench to compress the locking fingers on the parking brake cable retainer (Fig. 14).

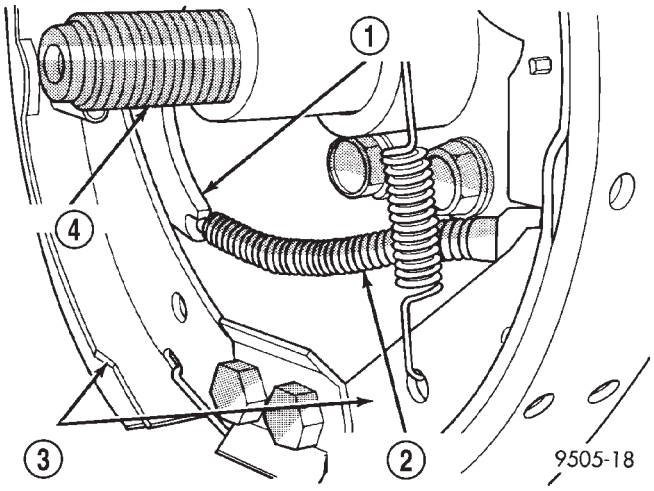

Fig. 12 Actuator Lever

1 – PARK BRAKE ACTUATING LEVER
2 – PARK BRAKE CABLE
3 – BRAKE SHOE ASSEMBLIES
4 – REAR SPINDLE

REMOVAL AND INSTALLATION (Continued)

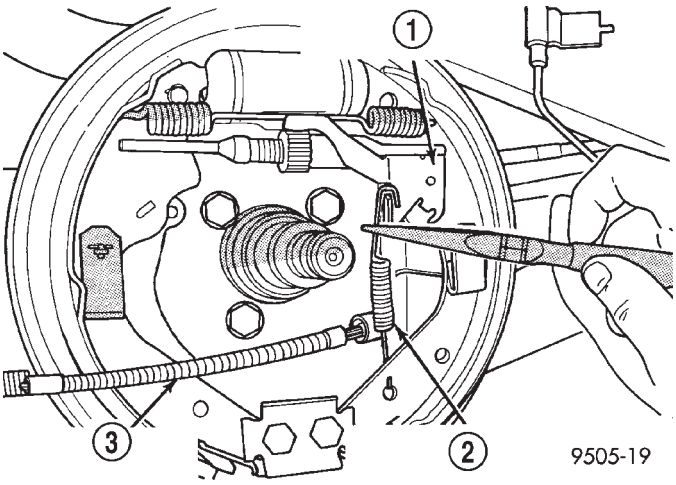

Fig. 13 Actuating Spring

1 – BRAKE SHOE ADJUSTMENT LEVER
2 – ADJUSTMENT LEVER ACTUATING SPRING
3 – PARK BRAKE CABLE

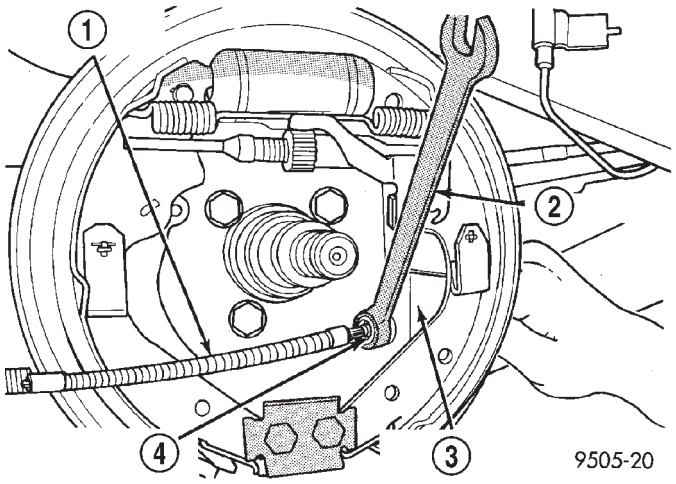

Fig. 14 Parking Brake Cable Removal

1 – PARK BRAKE CABLE
2 – 1/2′′ WRENCH
3 – REAR BRAKE SUPPORT PLATE
4 – PARK BRAKE CABLE RETAINER

(16) To remove the parking brake cable from the disc brake adapter on vehicles equipped with rear disc brakes:

(a) Remove the parking brake actuating lever from the parking brake cable (Fig. 15).

(b) Remove the parking brake cable from the rear disc brake adapter. The parking brake cable can be removed from the disc brake adapter using a ½ inch offset box wrench to compress the locking fingers on the parking brake cable retainer (Fig. 16).

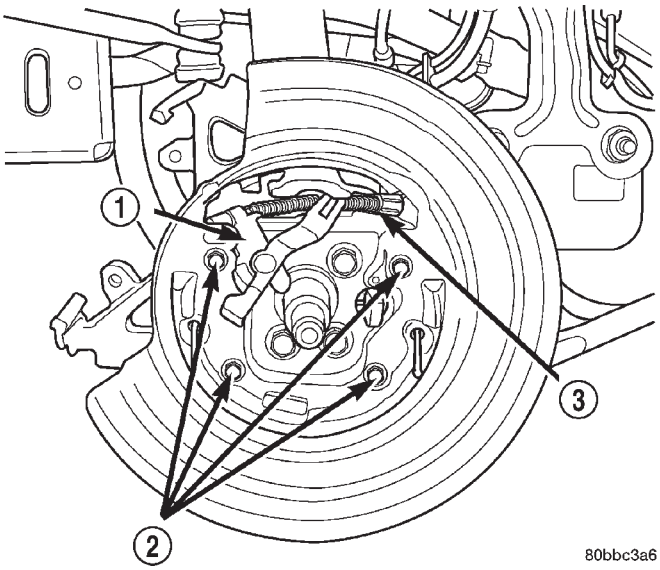

Fig. 15 Parking Brake Actuator Lever

1 – SHOE ACTUATOR LEVER
2 – SHIELD MOUNTING SCREWS
3 – REAR PARKING BRAKE CABLE

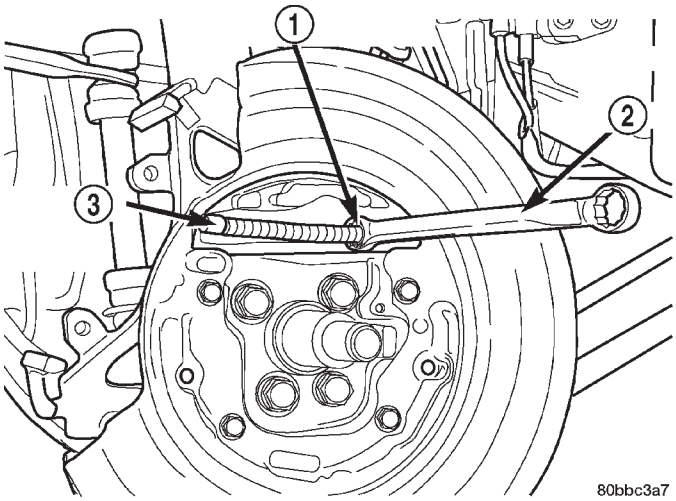

Fig. 16 Parking Brake Cable Removal

1 – CABLE RETAINER
2 – OFFSET BOX WRENCH
3 – PARKING BRAKE CABLE

REMOVAL AND INSTALLATION (Continued)

(17) Remove the two bolts on each axle trailing arm securing the cable and routing brackets to the arm (Fig. 17).

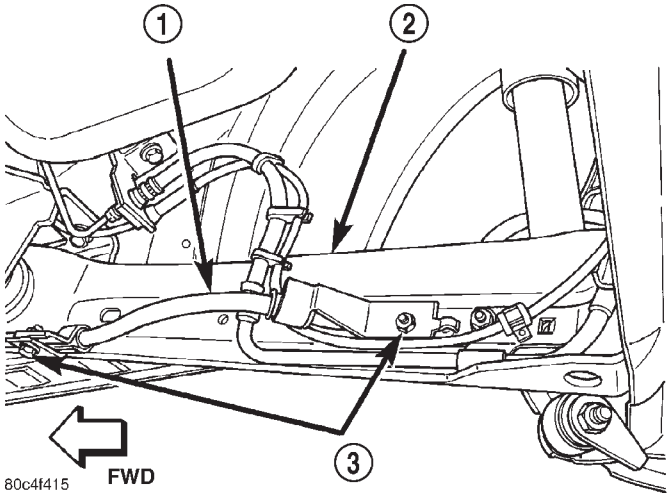

Fig. 17 Cable Routing Bracket Fasteners

1 – CABLE
2 – ARM
3 – FASTENERS

(18) Pull cable through hole in trailing arm.

(19) On vehicles equipped with antilock brakes, remove the bolts securing the wheel speed sensors to the disc brake adapters (Fig. 18). Remove the sensors from the adapters.

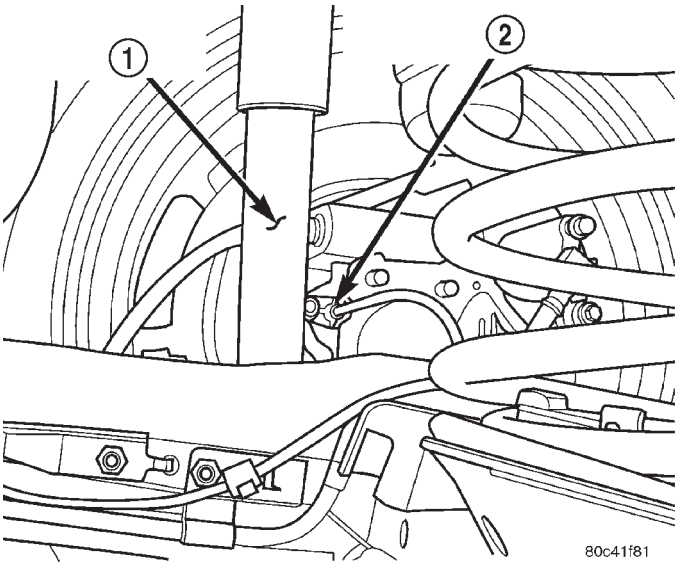

Fig. 18 Wheel Speed Sensor

1 – SHOCK ABSORBER
2 – RIGHT REAR WHEEL SPEED SENSOR

(20) Remove the four bolts securing each brake shoe support plate (drum brakes) or disc brake adapter, and spindle to the axle (Fig. 9).

(21) On each side of the vehicle, remove the support plate or disc brake adapter, and the spindle from the axle. Hang the support plate out of the way using a wire hanger or bungee cord.

(22) Remove the bolt securing the watts link bell crank to the center of the axle (Fig. 19).

(23) Remove the bolts securing the stabilizer bar cushion retainers to the rear axle (Fig. 20), then remove the stabilizer bar from the axle.

(24) Position a transmission jack or equivalent under the center of the axle raising it enough to support the axle.

(25) Remove the shock absorber lower mounting bolts and nuts at the axle (Fig. 19).

(26) Lower the transmission jack until the coil springs can be removed from the axle.

(27) Remove the coil springs and rubber isolators (Fig. 19).

(28) Using an awl, scribe a line marking the location of the axle trailing arm bracket, side-to-side and front-to-rear, on the body of the vehicle (Fig. 21).

(29) Remove the bolts securing the trailing arm forward brackets to the body of the vehicle.

(30) Remove the axle from the vehicle.

(31) To remove the trailing arm forward brackets from the axle, remove the thru-bolts.

INSTALLATION

(1) If removed, install the trailing arm forward brackets on each side of the axle in the following way:

(a) From above the axle, place the bracket down over the axle trailing arm bushing aligning the hole in the bracket with the center hole in the bushing (Fig. 19).

(b) From the outboard side of the axle and bracket, push the thru-bolt through the bracket and bushing. **The trailing arm bracket thru-bolts must be installed from the outside, in toward the center of the axle assembly, otherwise the bolt threaded ends will come in contact with the body of the vehicle upon axle installation on vehicle.**

(c) Install the nut on the inboard end of the nut. Tighten the nut until the bracket has resistance when turned, but still moves independent of the axle bushing. It must be fully tightened later, once the vehicle is at curb height.

REMOVAL AND INSTALLATION (Continued)

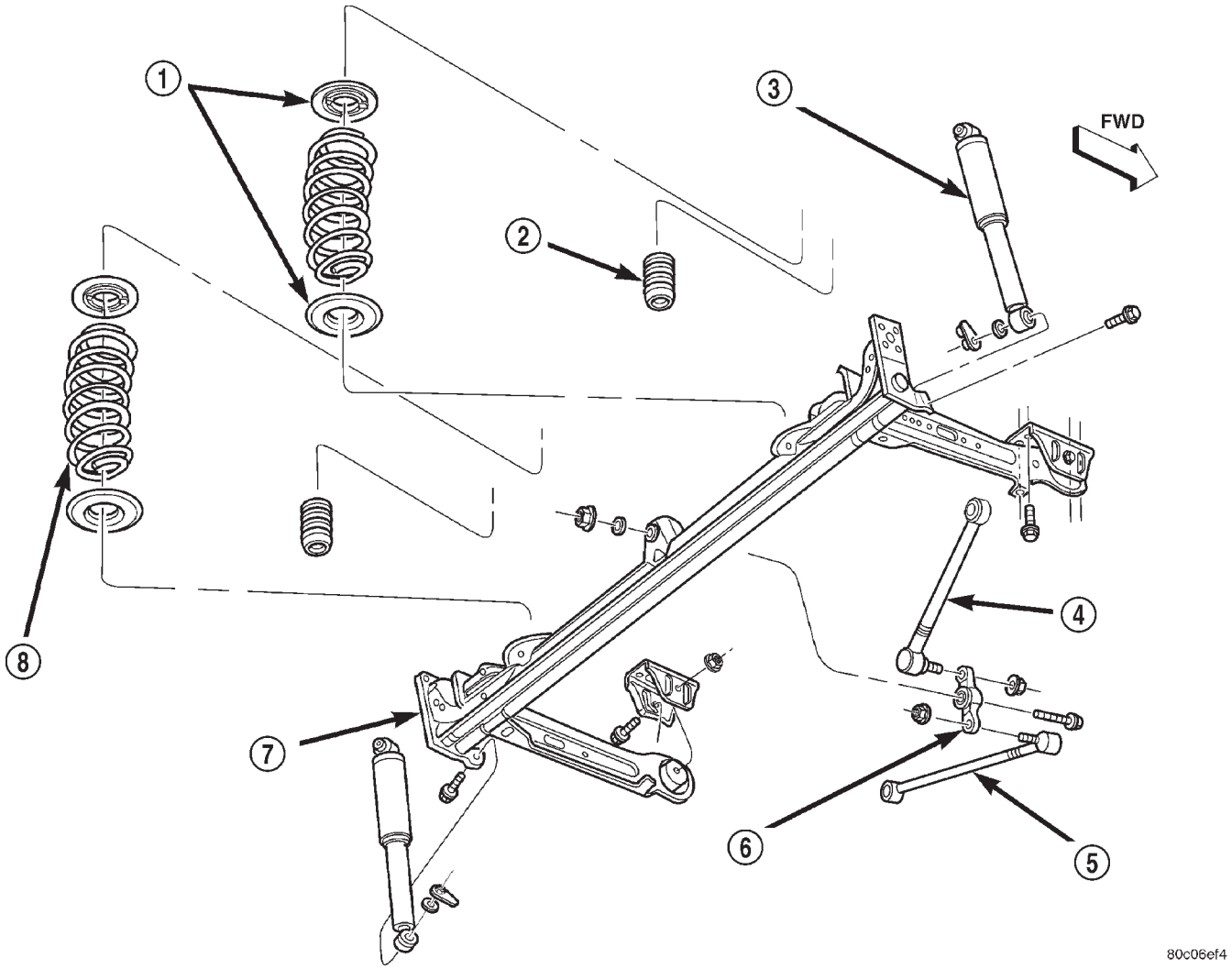

Fig. 19 Rear Suspension

1 – ISOLATORS
2 – JOUNCE BUMPER
3 – SHOCK ABSORBER
4 – WATTS LINK (UPPER)
5 – WATTS LINK (LOWER)
6 – BELL CRANK
7 – AXLE
8 – COIL SPRING

REMOVAL AND INSTALLATION (Continued)

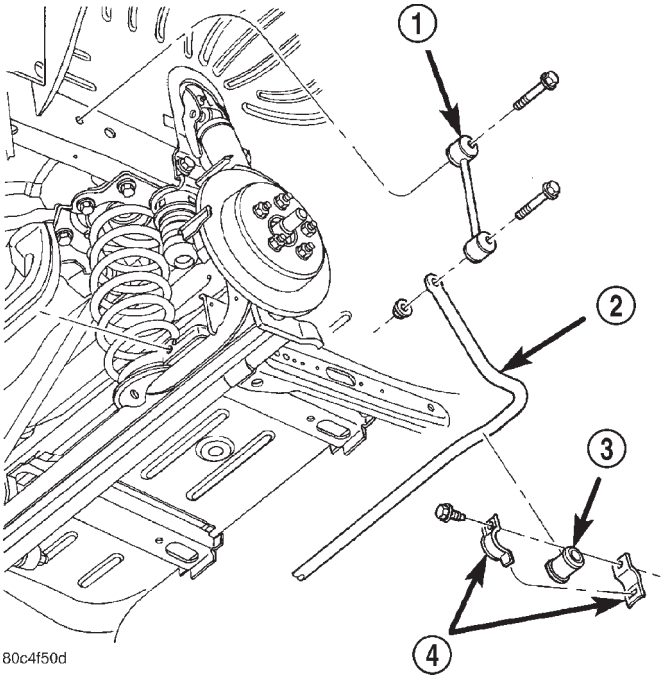

Fig. 20 Stabilizer Bar Mounting

1 – LINK
2 – STABILIZER BAR
3 – CUSHION
4 – RETAINER

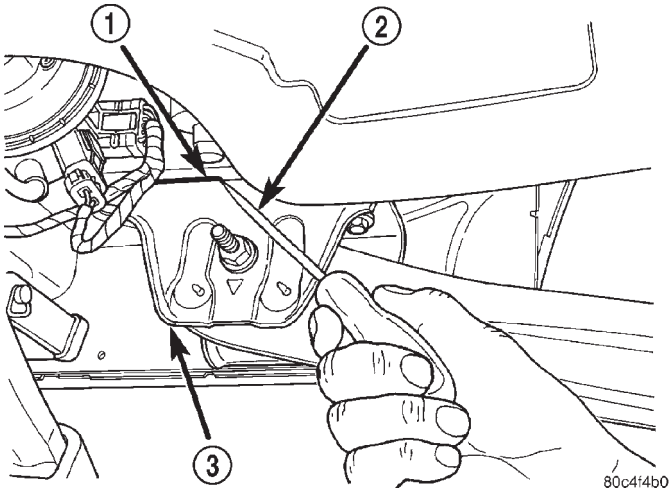

Fig. 21 Marking Bracket Location

1 – SCRIBED LINE
2 – AWL
3 – BRACKET

(2) Center the axle beam on the transmission jack standing at axle removal height.

(3) Swing the trailing arms up aligning the brackets with the scribed marks made upon removal (Fig. 21), then install all eight mounting bolts (four per side). Thread the bolts in, but do not fully tighten.

(4) Tap the axle trailing arm brackets as necessary to align the brackets to the scribed marks, then tighten the bolts to a torque of 54 N·m (40 ft. lbs.).

(5) Install a rubber isolator on each end of the coil springs wrapping the rubber fingers around the coil (Fig. 22). Turn the isolators until the rubber abutment butts up against the flat end of the spring coil.

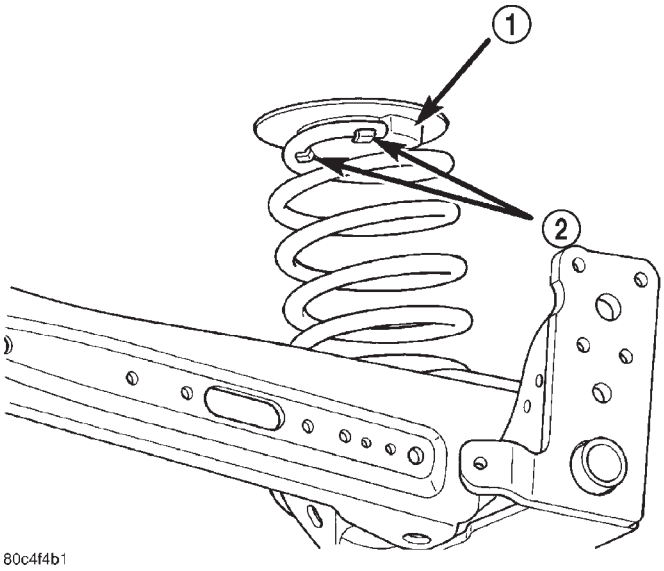

Fig. 22 Isolator Properly Installed

1 – ISOLATOR ABUTMENT
2 – FINGERS

NOTE: Both ends of the coil spring are identical. Either end of the spring can be the top or bottom.

(6) Place the coil springs on top of the axle spring perches.

(7) The coil springs require proper orientation to the body when installed. To do this, turn the coil springs (along with the rubber isolators) until the flat end of each upper spring coil lines up with an imaginary line running parallel with the axle beam as shown (Fig. 23). Also, make sure that the upper coils end near the outboard sides of the vehicle and not 180 degrees of that location.

(8) Raise the transmission jack guiding the coil springs into the spring mounting brackets on the body of the vehicle. Raise the jack until the shock absorber lower mounting bolts can be installed though the axle brackets and shock absorber lower mounting eyes (Fig. 19).

(9) Install the washer and nut on the end of each shock absorber lower mounting bolt. Tighten the mounting bolts to a torque of 68 N·m (50 ft. lbs.).

(10) Remove the jack.

REMOVAL AND INSTALLATION (Continued)

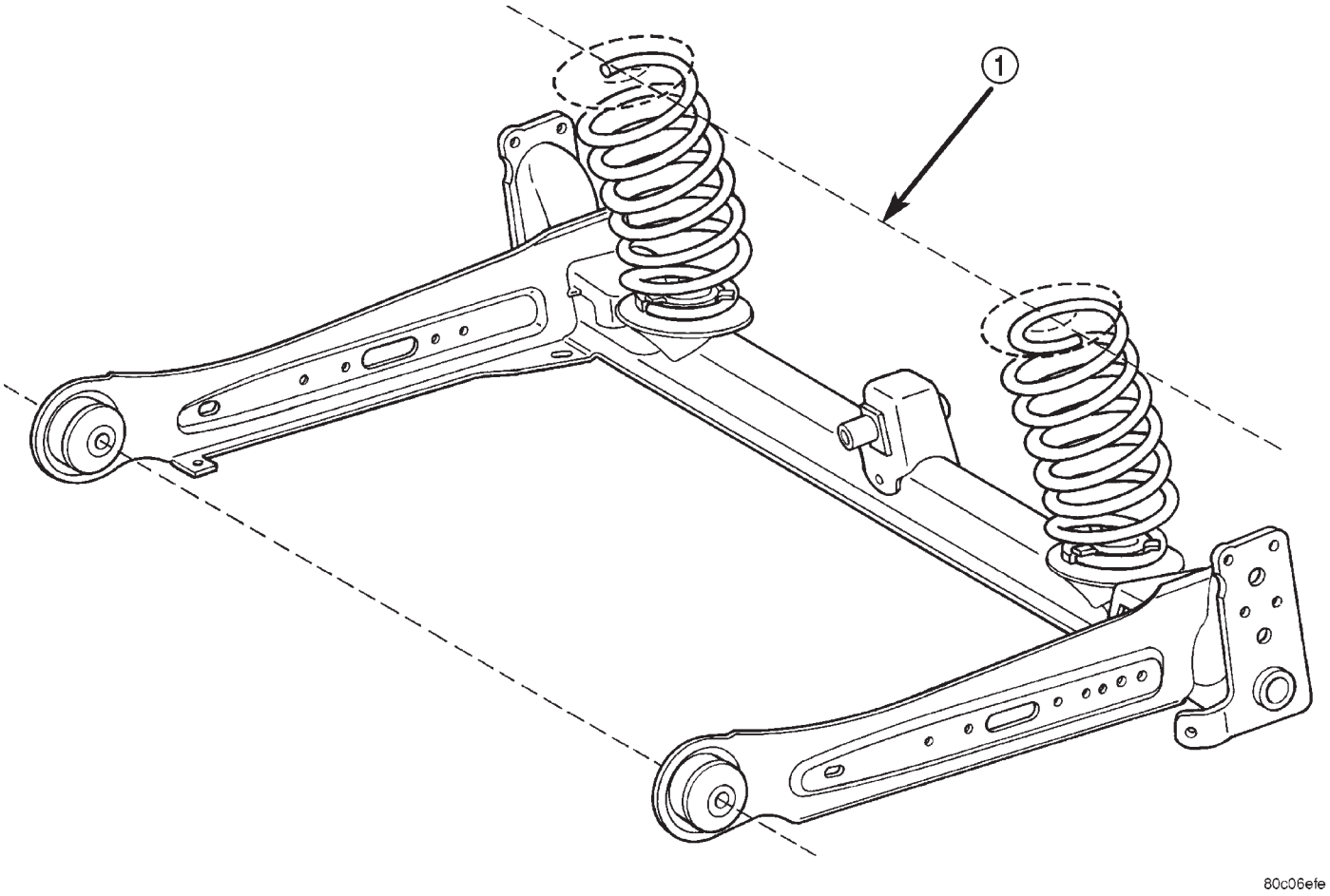

Fig. 23 Coil Spring Orientation

1 – IMAGINARY LINE

(11) Hook the lower ends of the stabilizer bar cushion retainers into the slots in the back of the axle, then rotate the opposite end of the retainers upward so the mounting bolts can be installed. Install the mounting bolt though each cushion retainer into the threads in the rear axle (Fig. 20). Tighten the rear stabilizer bar cushion retainer bolts to a torque of 54 N·m (40 ft. lbs.).

CAUTION: When installing the watts links and bell crank to the axle, make sure the bell crank is right-side-up. When mounted properly, the words "BACK UP" should be able to be read from the rear over the top of the axle (Fig. 24).

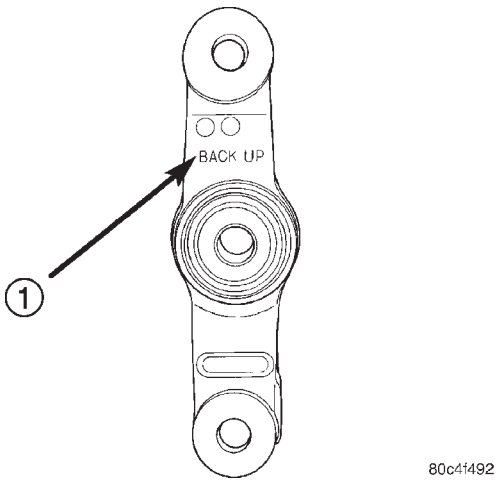

Fig. 24 Bell Crank

1 – INSTALLATION DIRECTION

2001 PT Service Manual
Publication No. 81-370-1111
TSB 26-04-01 April, 2001

REMOVAL AND INSTALLATION (Continued)

(12) Install the bolt from the front securing the watts link bell crank to the center of the axle (Fig. 19). Place the washer and nut on the end of the mounting bolt and tighten it to a torque of 122 N·m (90 ft. lbs.).

(13) On each side of the vehicle, Install the spindle and the support plate (drum brakes) or disc brake adapter on the end of the axle (Fig. 9).

(14) Clean the threads of the bolts used to mount the brake shoe support plates or disc brake adapters, and the spindles to the axle, then apply Mopar® Stud & Bearing Mount Adhesive or equivalent to the bolt threads or replace with new mounting bolts.

(15) Install the four bolts securing each brake shoe support plate or disc brake adapter, and the spindle to the axle. Tighten the mounting bolts to a torque of 95 N·m (70 ft. lbs.).

(16) On vehicles equipped with antilock brakes, install the wheel speed sensors in the disc brake adapters and install the bolts securing them in place (Fig. 18). Tighten the wheel speed sensor mounting bolts to a torque of 12 N·m (105 in. lbs.).

(17) Guide the end of each parking brake cable through hole in the trailing arm towards the brake.

(18) Align the cable routing brackets with their mounts on the trailing arm. Install the two bolts securing the cable and routing brackets to the trailing arm (Fig. 17). Install and tighten the mounting bolts to a torque of 11 N·m (100 in. lbs.).

(19) On each side of the vehicle, install the parking brake cable into the brake support plate or the rear disc brake adapter. Be sure the locking fingers on the cable retainer are expanded once the cable is pushed all the way into the support plate or brake adapter hole to ensure the cable is securely held in place.

(20) On vehicles equipped with rear drum brakes, on each side of the vehicle:

- Install the parking brake cable on the parking brake cable actuating lever (Fig. 12).
- Install the actuating spring to the brake shoe and the brake adjustment lever (Fig. 13).

(21) On vehicles equipped with rear disc brakes, on each side of the vehicle:

- Install the parking brake shoe actuator lever on the parking brake cable (Fig. 15).
- Install the parking brake shoe assemblies on the disc brake adapter (Fig. 11).

(22) Install a hub and bearing on each rear spindle. Install a NEW hub and bearing retaining nut. Tighten the retaining nuts to a torque of 217 N·m (160 ft. lbs.).

(23) Install the hub and bearing dust caps.

NOTE: On vehicles with rear drum brakes, before installing the drum, it may be necessary to adjust the rear brakes. Refer to ADJUSTMENTS in the BRAKES section.

(24) On drum brake equipped vehicles, install the brake drums.

(25) On vehicles equipped with rear disc brakes (Fig. 10):

(a) Install the brake rotors.

(b) Install the disc brake calipers.

(c) Install the caliper guide pin bolts, then tighten them to a torque of 22 N·m (192 in. lbs.).

(26) Install the bolts securing the disc brake flex hoses or drum brake flex hoses to the axle trailing arms.

(27) Install the rear tire and wheel assemblies. Tighten all wheel nuts to a torque of 135 N·m (100 ft. lbs.).

(28) Lower the vehicle.

(29) Install the rear parking brake cables into the equalizer on the parking brake lever output cable (Fig. 8).

(30) Ensure that the parking brake cables are correctly installed on the equalizer and aligned with the cable track on the parking brake lever.

NOTE: The parking brake lever can only be in the released position when releasing the automatic adjuster.

(31) Keeping your hands clear of the automatic adjuster sector and pawl area, firmly grasp the parking brake lever pin punch (drill bit or locking pin if a new mechanism has been installed) (Fig. 7), then quickly remove it from the parking brake lever mechanism. This will allow the parking brake lever mechanism to automatically adjust the parking brake cables.

(32) Cycle the parking brake lever once to position the parking brake cables, then return the parking brake lever its released position.

(33) Check the rear wheels of the vehicle. They should rotate freely without excessive dragging with the lever in its released position.

(34) Install the center console and its mounting screws.

(35) Install the shift knob if previously removed.

(36) Apply the parking brake.

(37) Remove the blocks from the tires and wheels.

(38) Reconnect the battery negative terminal.

(39) Reinstall the air cleaner cover.

(40) Place the vehicle on an alignment rack or drive-on hoist.

(41) With the vehicle at curb height, tighten both trailing arm to mounting bracket pivot thru-bolts to a torque of 108 N·m (80 ft. lbs.).

(42) Check the rear wheel alignment. Refer to WHEEL ALIGNMENT in this section. If necessary, thrust angle may be adjusted by loosening the axle training arm bracket bolts to the body and shifting the axle forward or rearward, then retightening the bolts to a torque of 54 N·m (40 ft. lbs.).

REMOVAL AND INSTALLATION (Continued)

AXLE PIVOT BUSHING

NOTE: Before proceeding with this procedure, review SERVICE WARNINGS AND CAUTIONS at the beginning of REMOVAL AND INSTALLATION in this section.

REMOVAL

(1) Raise the vehicle. Refer to HOISTING in the LUBRICATION AND MAINTENANCE group for the proper lifting procedure.

(2) Remove both rear tire and wheel assemblies from the vehicle.

(3) Remove the bolts securing the rear brake flex hoses (and wheel speed sensor cable on ABS models) to the vehicle body immediately behind the axle trailing arm forward brackets.

(4) Remove the two bolts on each axle trailing arm securing the parking brake cables and routing brackets to the arm (Fig. 25).

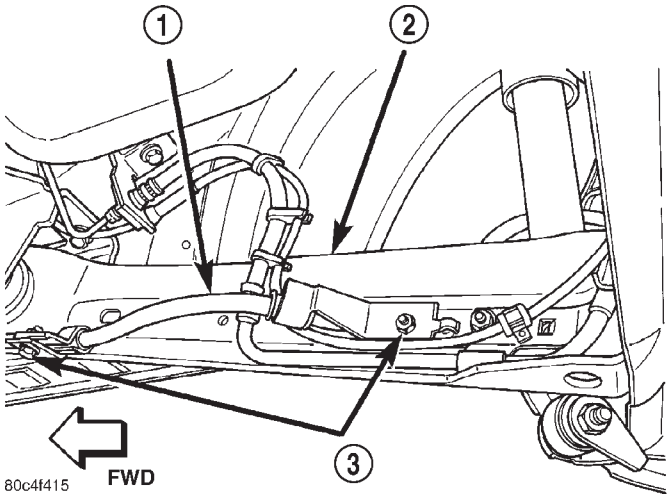

Fig. 25 Cable Routing Bracket Fasteners

1 – CABLE
2 – ARM
3 – FASTENERS

(5) Move the parking brake cables from their mounting positions away from the bottom of the trailing arm pivot bushing and the forward bracket.

(6) Remove the bolt securing the watts link bell crank to the center of the axle (Fig. 26).

(7) Position a transmission jack or equivalent under the center of the axle raising it just enough to support the axle.

(8) Using an awl, scribe a line marking the location of the axle trailing arm bracket, side-to-side and front-to-rear, on the body of the vehicle (Fig. 27).

(9) Remove the bolts securing the trailing arm forward brackets to the body of the vehicle.

(10) Using the lower shock mounts as a pivot point, pry down on the forward end of the trailing arm and place a block of wood between the top of the arm and the body of the vehicle just to the rear of the forward mounting bracket. Be careful not to pinch any hoses or cables.

(11) Remove the pivot thru-bolt securing the forward bracket to the trailing arm.

(12) Place Receiver, Special Tool 8405-1, on Press, Special Tool C-4212F, and tighten the set screw (Fig. 28).

(13) Place the special tool assembly over the bushing to be replaced as shown (Fig. 28). When properly installed, the screw drive on the special tool will be toward the center of the vehicle. Note the curve on the axle trailing arm. This curve prevents the tool from being properly installed in the opposite direction.

(14) Tighten the screw drive, pressing the bushing out of the trailing arm into the receiver.

(15) Remove the tool and the bushing from the trailing arm. Discard the used bushing.

(16) If the opposite side bushing needs to be removed, repeat Step 11 through Step 15 on the opposite bushing.

REMOVAL AND INSTALLATION (Continued)

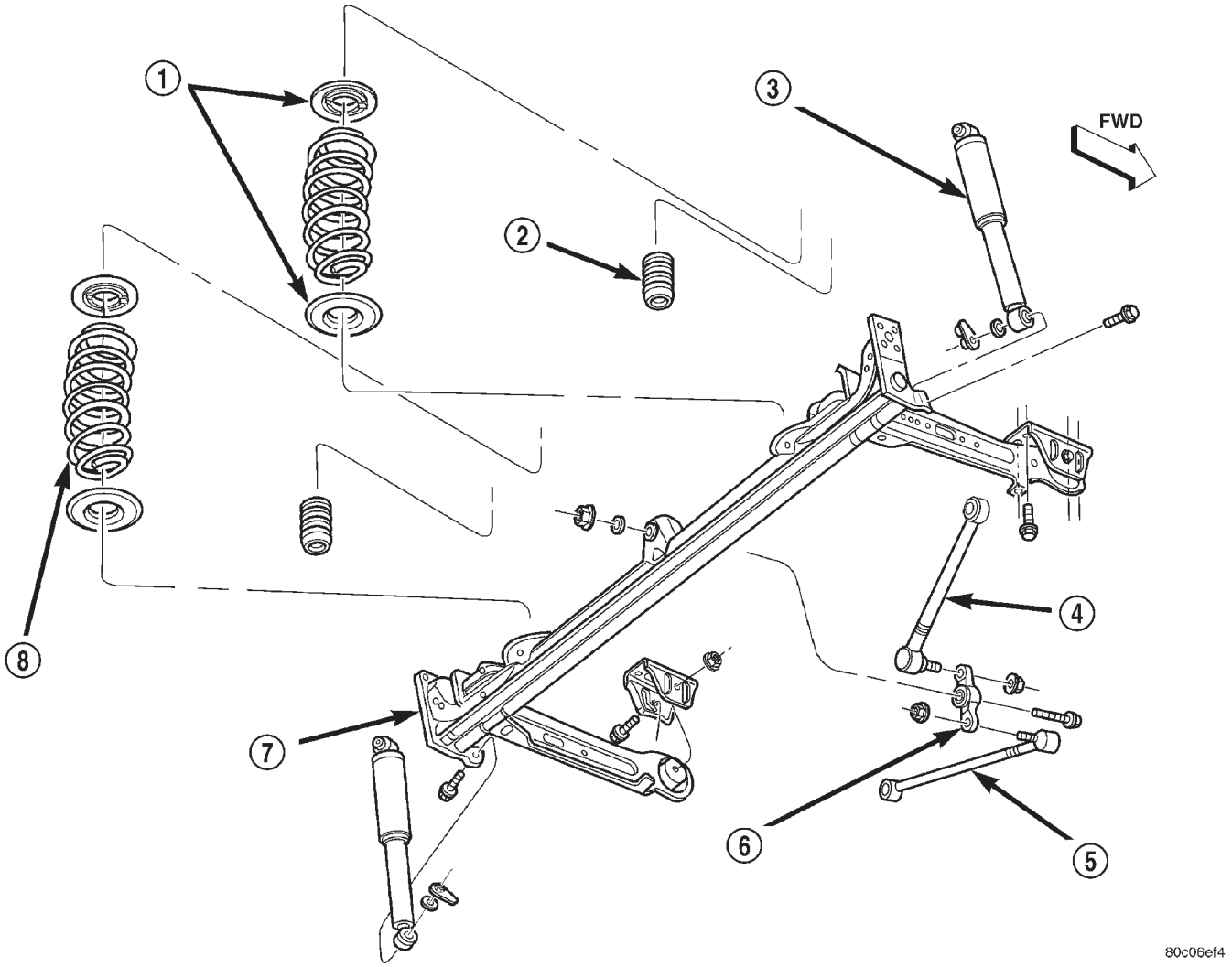

Fig. 26 Rear Suspension

1 – ISOLATORS
2 – JOUNCE BUMPER
3 – SHOCK ABSORBER
4 – WATTS LINK (UPPER)
5 – WATTS LINK (LOWER)
6 – BELL CRANK
7 – AXLE
8 – COIL SPRING

REMOVAL AND INSTALLATION (Continued)

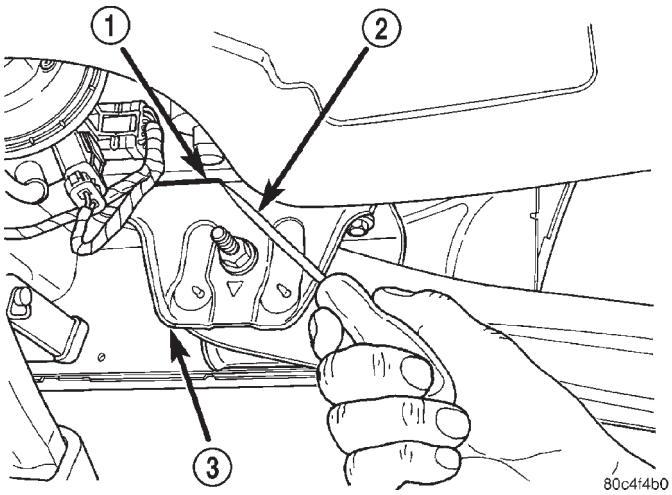

Fig. 27 Marking Bracket Location

1 – SCRIBED LINE
2 – AWL
3 – BRACKET

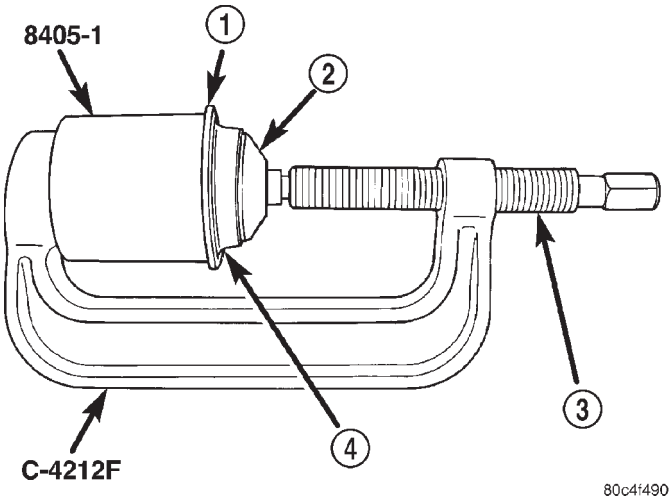

Fig. 28 Bushing Removal

1 – TRAILING ARM
2 – BUSHING
3 – SCREW DRIVE
4 – CURVE

INSTALLATION

NOTE: To ease and attain proper installation of the bushing using Special Tool 8405, use Mopar® Rubber Bushing Installation Lube as indicated in the following step.

(1) Apply Mopar® Rubber Bushing Installation Lube to the outside edges of the NEW bushing. Also, lubricate the inside of the Installer, Special Tool 8405-2 with the special lube.

(2) Place the stepped end of the Installer on the end of the trailing arm bushing sleeve that has the curved flange at the arm (Fig. 29).

(3) Place the lubricated bushing inside the large opening in the Installer.

(4) Place the Press, Special Tool C-4212F, with Receiver, Special Tool 8405-1, installed, over the arm, Installer and bushing as shown (Fig. 29). When properly installed, the screw drive on the special tool will be toward the center of the vehicle. Note the curve on the axle trailing arm. This curve prevents the tool from being properly installed in the opposite direction.

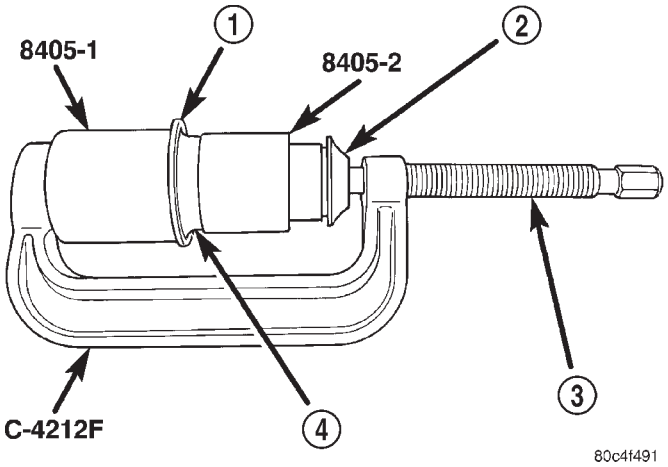

Fig. 29 Bushing Installation

1 – TRAILING ARM
2 – BUSHING
3 – SCREW DRIVE
4 – CURVE

(5) Tighten the screw drive, pressing the bushing into the trailing arm sleeve. Do not over-install the bushing; the bushing can be pushed out the other side, into the Receiver. Push the bushing in until freed from the installer and centered in the trailing arm sleeve. The outer lips of the bushing must hang out past the end of the sleeve on each side of the trailing arm.

(6) Remove the tools from the trailing arm.

(7) If the opposite side bushing needs to be installed, repeat Step 1 through Step 6 on the opposite side.

REMOVAL AND INSTALLATION (Continued)

(8) Install the trailing arm forward bracket(s) on the axle using the following way:

(a) From above the axle, place the bracket down over the axle trailing arm bushing aligning the hole in the bracket with the center hole in the bushing (Fig. 26).

(b) From the outboard side of the axle and bracket, push the thru-bolt through the bracket and bushing. **The trailing arm bracket thru-bolts must be installed from the outside, in toward the center of the axle assembly, otherwise the bolt threaded ends will come in contact with the body of the vehicle upon axle installation on vehicle.**

(c) Install the nut on the inboard end of the nut. Tighten the nut until the bracket has resistance when turned, but still moves independent of the axle bushing. It must be fully tightened later, once the vehicle is at curb height.

(9) Remove the wood block between the arm and body of the vehicle.

(10) Swing the trailing arms up aligning the brackets with the scribed marks made upon removal (Fig. 27), then install all eight mounting bolts (four per side). Thread the bolts in, but do not fully tighten.

(11) Tap the axle trailing arm brackets as necessary to align the brackets to the scribed marks, then tighten the bolts to a torque of 54 N·m (40 ft. lbs.).

(12) Remove the jack.

CAUTION: When installing the watts links and bell crank to the axle, make sure the bell crank is right-side-up. When mounted properly, the words "BACK UP" should be able to be read from the rear over the top of the axle (Fig. 30).

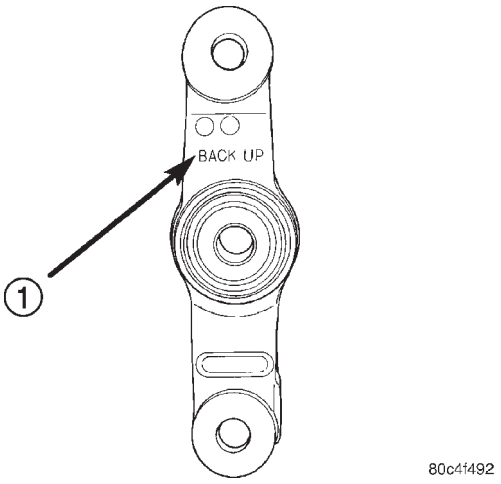

Fig. 30 Bell Crank

1 – INSTALLATION DIRECTION

(13) Install the bolt from the front securing the watts link bell crank to the center of the axle (Fig. 26). Place the washer and nut on the end of the mounting bolt and tighten it to a torque of 122 N·m (90 ft. lbs.).

(14) Move the parking brake cables to their original mounting position below the axle pivot bushing on the inboard side of the trailing arm.

(15) Align the cable routing brackets with their mounts on the trailing arm. Install the two bolts securing the cable and routing brackets to the trailing arm (Fig. 25). Install and tighten the mounting bolts to a torque of 11 N·m (100 in. lbs.).

(16) Make sure the parking brake cable and grommet is still in the proper position at the body access hole.

(17) Install the bolts securing the brake flex hoses (and wheel speed sensor cable on ABS models) to the vehicle body immediately behind the axle trailing arm forward brackets.

(18) Install the rear tire and wheel assemblies. Tighten all wheel nuts to a torque of 135 N·m (100 ft. lbs.).

(19) Lower the vehicle.

(20) Place the vehicle on an alignment rack or drive-on hoist.

(21) With the vehicle at curb height, tighten both trailing arm to mounting bracket pivot thru-bolts to a torque of 108 N·m (80 ft. lbs.).

COIL SPRING

NOTE: Before proceeding with this procedure, review SERVICE WARNINGS AND CAUTIONS at the beginning of REMOVAL AND INSTALLATION in this section.

REMOVAL

(1) Raise the vehicle. Refer to HOISTING in the LUBRICATION AND MAINTENANCE group for the proper lifting procedure.

(2) Remove both rear tire and wheel assemblies from the vehicle.

(3) Remove the bolt securing the watts link bell crank to the center of the axle (Fig. 31).

(4) Remove the bolts securing the stabilizer bar cushion retainers to the rear axle (Fig. 32), then remove the stabilizer bar from the axle.

(5) Position a transmission jack or equivalent under the center of the axle raising it enough to support the axle.

(6) Remove the shock absorber lower mounting bolts and nuts at the axle (Fig. 31).

(7) Lower the transmission jack until the coil springs can be removed from the axle.

(8) Remove the coil springs and rubber isolators (Fig. 31).

REMOVAL AND INSTALLATION (Continued)

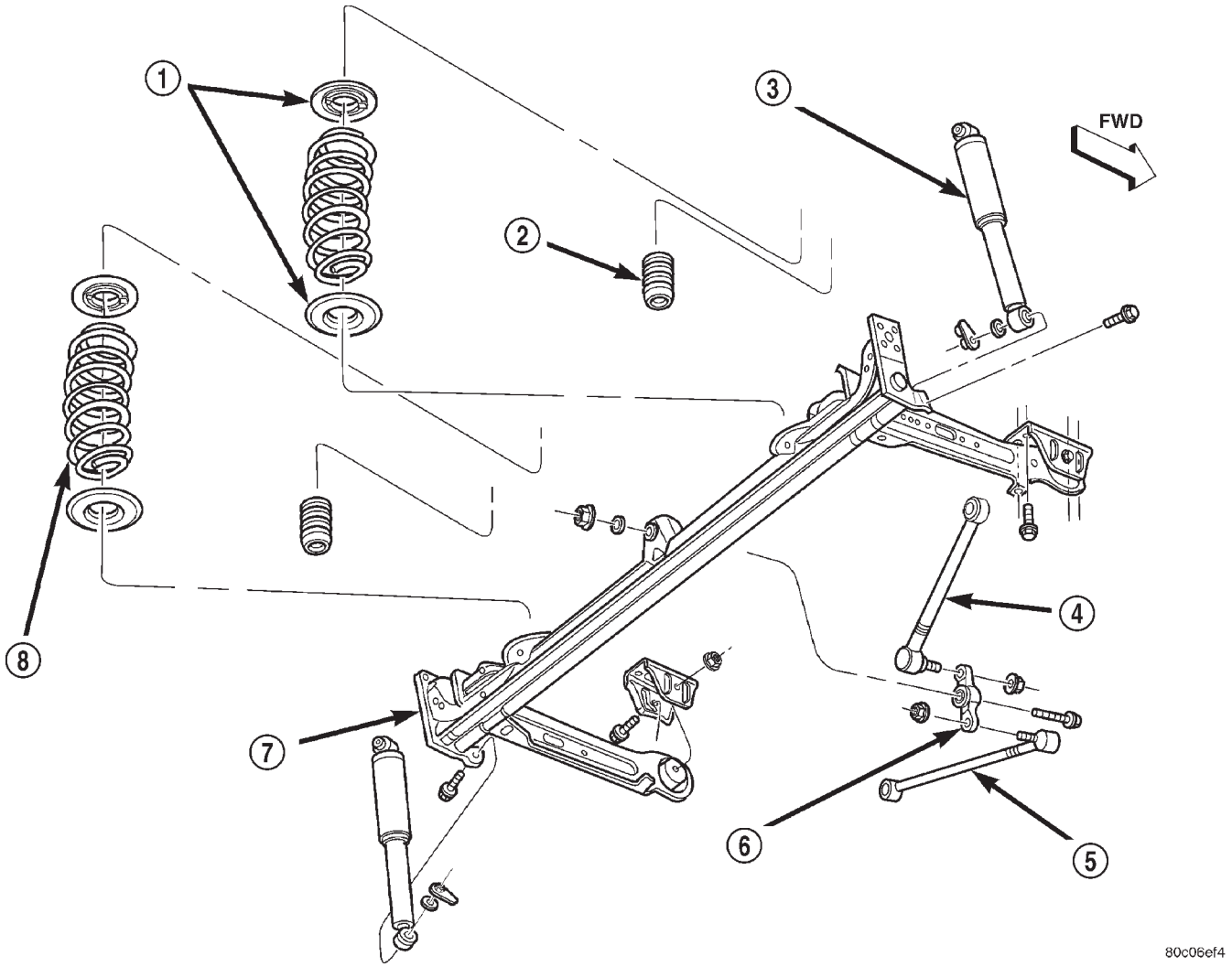

Fig. 31 Rear Suspension

1 – ISOLATORS
2 – JOUNCE BUMPER
3 – SHOCK ABSORBER
4 – WATTS LINK (UPPER)
5 – WATTS LINK (LOWER)
6 – BELL CRANK
7 – AXLE
8 – COIL SPRING

REMOVAL AND INSTALLATION (Continued)

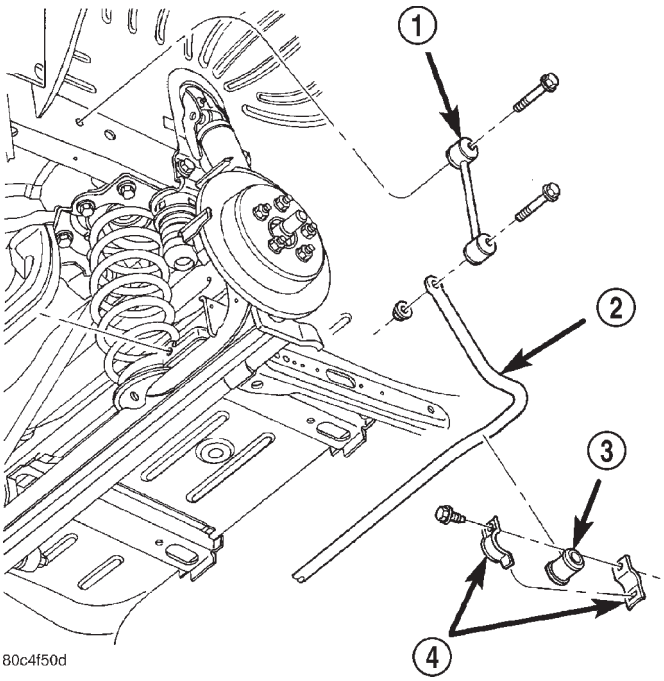

Fig. 32 Stabilizer Bar Mounting

1 – LINK
2 – STABILIZER BAR
3 – CUSHION
4 – RETAINER

INSTALLATION

(1) Install a rubber isolator on each end of the coil springs wrapping the rubber fingers around the coil (Fig. 33). Turn the isolators until the rubber abutment butts up against the flat end of the spring coil.

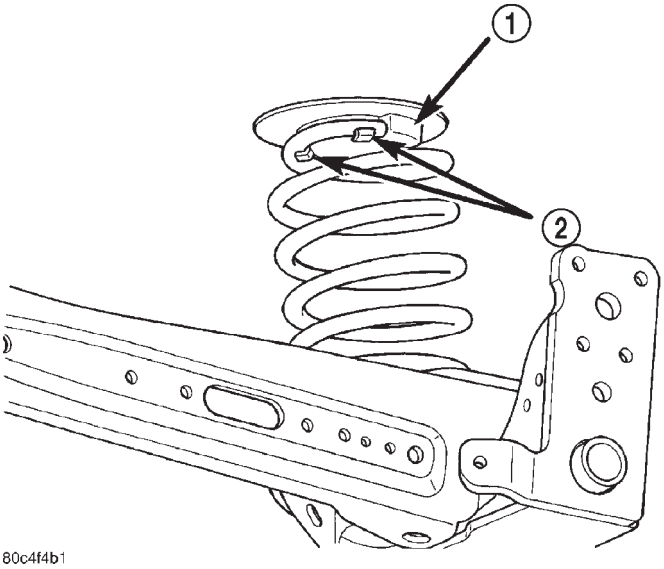

Fig. 33 Isolator Properly Installed

1 – ISOLATOR ABUTMENT
2 – FINGERS

NOTE: Both ends of the coil spring are identical. Either end of the spring can be the top or bottom.

(2) Place the coil springs on top of the axle spring perches.

(3) The coil springs require proper orientation to the body when installed. To do this, turn the coil springs (along with the rubber isolators) until the flat end of each upper spring coil lines up with an imaginary line running parallel with the axle beam as shown (Fig. 34). Also, make sure that the upper coils end near the outboard sides of the vehicle and not 180 degrees of that location.

(4) Raise the transmission jack guiding the coil springs into the spring mounting brackets on the body of the vehicle. Raise the jack until the shock absorber lower mounting bolts can be installed though the axle brackets and shock absorber lower mounting eyes (Fig. 31).

(5) Install the washer and nut on the end of each shock absorber lower mounting bolt. Tighten the mounting bolts to a torque of 68 N·m (50 ft. lbs.).

(6) Remove the jack.

(7) Hook the lower ends of the stabilizer bar cushion retainers into the slots in the back of the axle, then rotate the opposite end of the retainers upward so the mounting bolts can be installed. Install the mounting bolt though each cushion retainer into the threads in the rear axle (Fig. 32). Tighten the rear stabilizer bar cushion retainer bolts to a torque of 54 N·m (40 ft. lbs.).

CAUTION: When installing the watts links and bell crank to the axle, make sure the bell crank is right-side-up. When mounted properly, the words "BACK UP" should be able to be read from the rear over the top of the axle (Fig. 35).

(8) Install the bolt from the front securing the watts link bell crank to the center of the axle (Fig. 31). Place the washer and nut on the end of the mounting bolt and tighten it to a torque of 122 N·m (90 ft. lbs.).

(9) Install the rear tire and wheel assemblies. Tighten all wheel nuts to a torque of 135 N·m (100 ft. lbs.).

(10) Lower the vehicle.

(11) Verify proper vehicle curb height. Refer to CURB HEIGHT MEASUREMENT in the WHEEL ALIGNMENT section.

REMOVAL AND INSTALLATION (Continued)

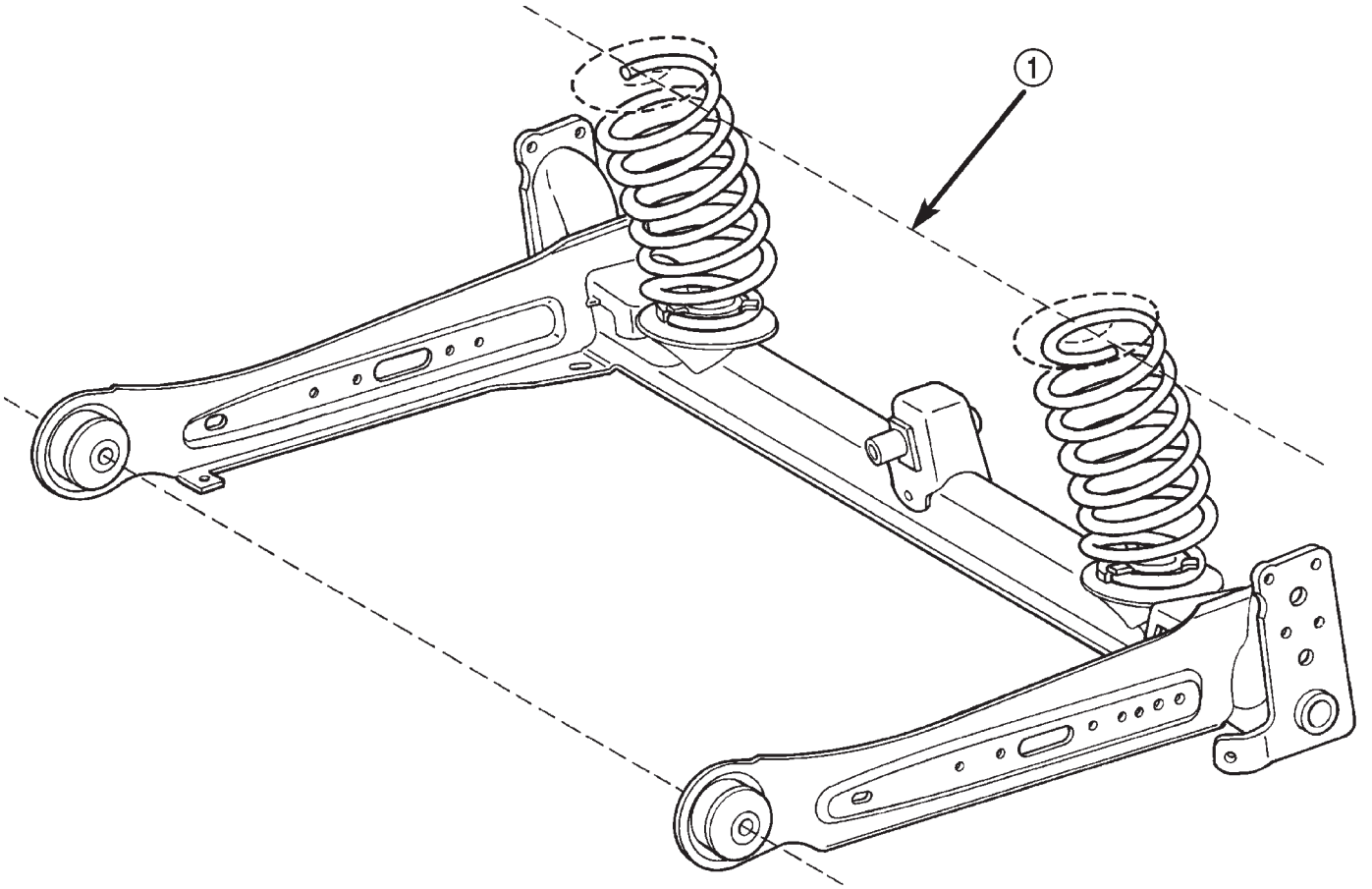

Fig. 34 Coil Spring Orientation

1 – IMAGINARY LINE

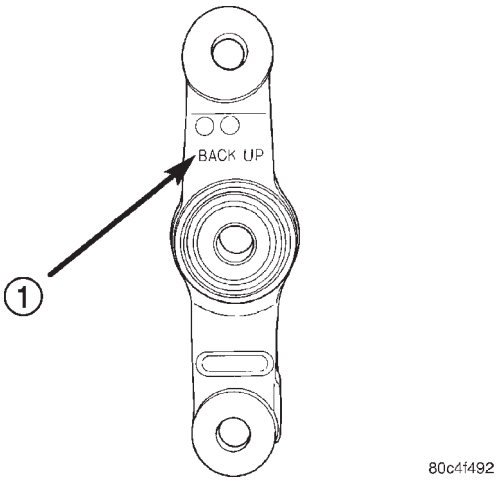

Fig. 35 Bell Crank

1 – INSTALLATION DIRECTION

HUB AND BEARING (REAR)

NOTE: Before proceeding with this procedure, review SERVICE WARNINGS AND CAUTIONS at the beginning of REMOVAL AND INSTALLATION in this section.

REMOVAL

(1) Raise the vehicle. Refer to HOISTING in the LUBRICATION AND MAINTENANCE group for the proper lifting procedure.

(2) Remove the rear tire and wheel assembly.

(3) On vehicles equipped with rear drum brakes, remove the brake drum retaining clips, then the drum (Fig. 36).

(4) On vehicles equipped with rear disc brakes:

(a) Remove the disc brake caliper guide pin bolts, then the caliper from the disc brake adapter (Fig. 37).

(b) Hang the caliper out of the way using a wire hanger or bungee cord.

REMOVAL AND INSTALLATION (Continued)

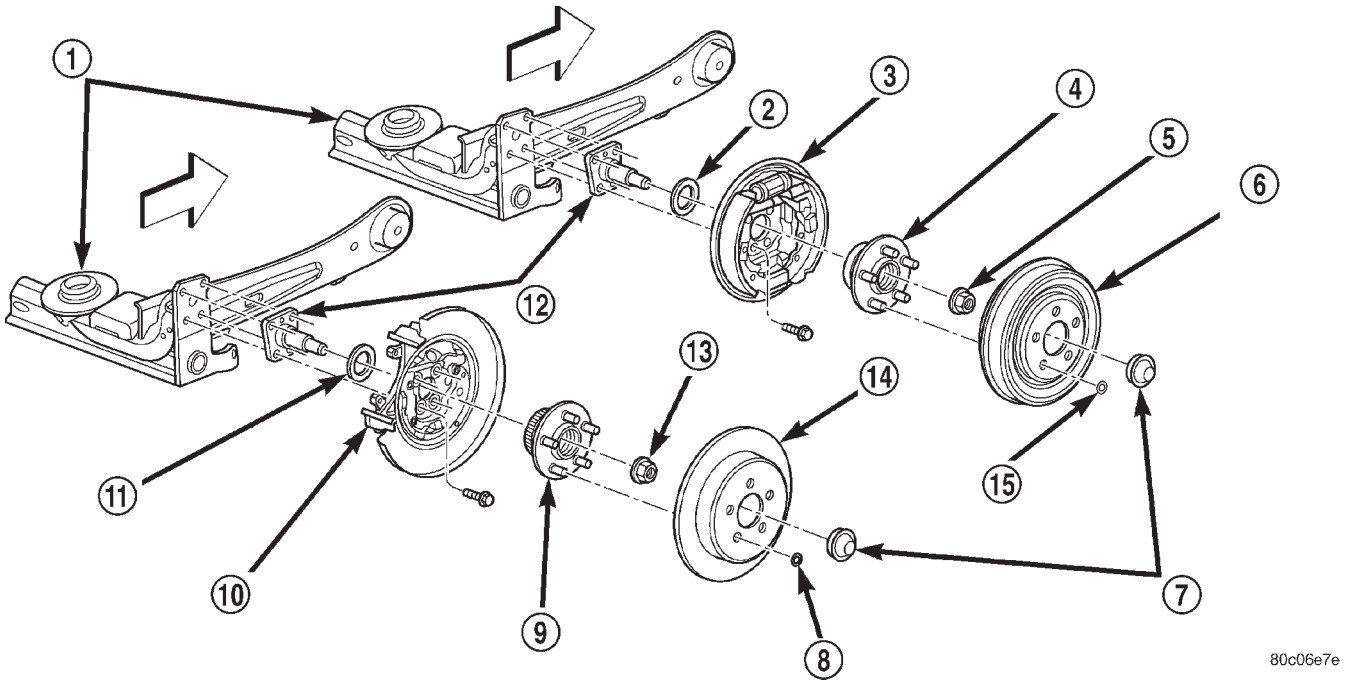

Fig. 36 Rear Brake Mounting To Axle

1 – AXLE
2 – SEAL
3 – DRUM BRAKE WITH SUPPORT PLATE
4 – HUB AND BEARING
5 – HUB NUT
6 – BRAKE DRUM
7 – DUST CAP
8 – RETAINER CLIP
9 – HUB AND BEARING
10 – DISC BRAKE ADAPTER
11 – SEAL
12 – SPINDLE
13 – HUB NUT
14 – BRAKE ROTOR
15 – RETAINER CLIP

(c) Remove the brake rotor retaining clips (Fig. 36).

(d) Remove the brake rotor from the rear hub and bearing.

(5) Remove the dust cap from the hub and bearing (Fig. 36).

(6) Remove the hub and bearing retaining nut from the spindle, then remove the hub and bearing (Fig. 36).

INSTALLATION

(1) Install the hub and bearing on the spindle (Fig. 36). Install a NEW hub and bearing retaining nut. Tighten the retaining nuts to a torque of 217 N·m (160 ft. lbs.).

(2) Install the hub and bearing dust caps.

(3) On drum brake equipped vehicles, install the brake drum.

(4) On vehicles equipped with rear disc brakes (Fig. 37):

(a) Install the brake rotor.

(b) Install the disc brake caliper.

(c) Install the caliper guide pin bolts, then tighten them to a torque of 22 N·m (192 in. lbs.).

(5) Install the rear tire and wheel assembly. Tighten all wheel nuts to a torque of 135 N·m (100 ft. lbs.).

(6) Lower the vehicle.

JOUNCE BUMPER

REMOVAL

(1) Raise the vehicle. Refer to HOISTING in the LUBRICATION AND MAINTENANCE group for the proper lifting procedure.

(2) Grasp the jounce bumper and with a twisting motion, remove the jounce bumper from the bracket mounted to the body.

INSTALLATION

CAUTION: Do not use any type of lubricant to aid in jounce bumper installation. Premature jounce bumper failure issues could result.

(1) Carefully twist and push the jounce bumper into the bracket mounted to the body of the vehicle until it bottoms in the bracket.

(2) Lower the vehicle.

REMOVAL AND INSTALLATION (Continued)

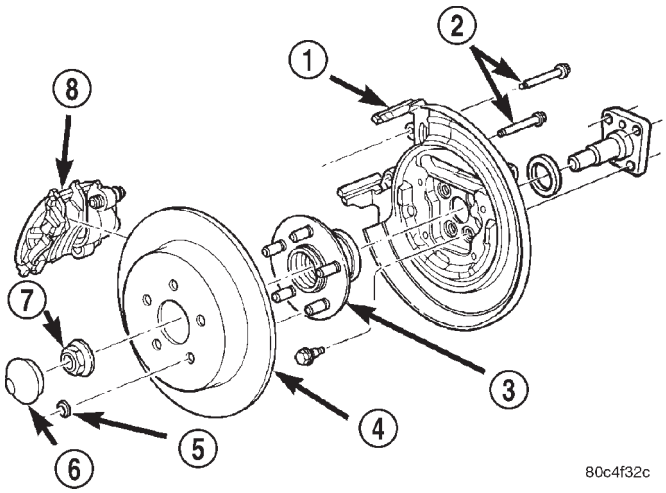

Fig. 37 Rear Disc Brakes

1 – DISC BRAKE ADAPTER
2 – GUIDE PIN BOLTS
3 – HUB AND BEARING
4 – BRAKE ROTOR
5 – RETAINER CLIP
6 – DUST CAP
7 – NUT
8 – DISC BRAKE CALIPER

SHOCK ABSORBER

NOTE: Before proceeding with this procedure, review SERVICE WARNINGS AND CAUTIONS at the beginning of REMOVAL AND INSTALLATION in this section.

REMOVAL

(1) Raise the vehicle. Refer to HOISTING in the LUBRICATION AND MAINTENANCE group for the proper lifting procedure.

(2) Remove the tire and wheel assembly.

(3) Position a transmission jack or equivalent under the center of the axle raising it enough to support the axle.

(4) Remove the shock absorber lower mounting bolt and nut at the axle (Fig. 38).

(5) Remove the upper mounting bolt (Fig. 38), then remove the shock absorber from the vehicle.

INSTALLATION

(1) Install the shock absorber to the vehicle by first attaching the top shock absorber eye to the body bracket using the upper mounting bolt (Fig. 38). Do not fully tighten the bolt at this time.

(2) Raise or lower the jack as necessary until the shock absorber lower mounting bolt can be installed though the axle flange and the shock absorber lower mounting eye (Fig. 38).

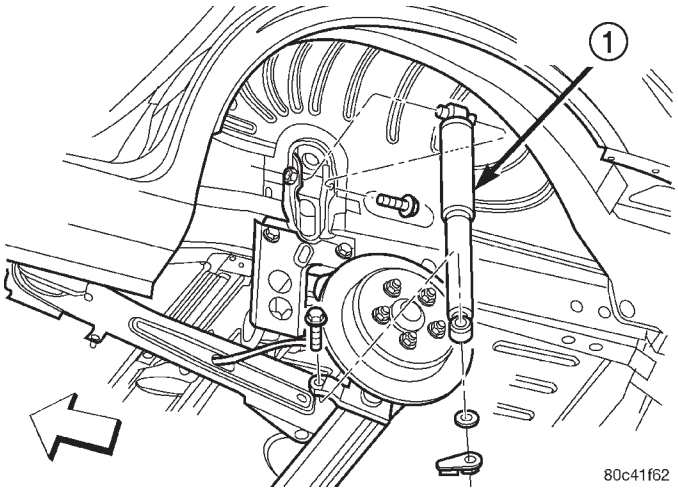

Fig. 38 Shock Absorber Mounting

1 – SHOCK ABSORBER

(3) Install the washer and nut on the end of the shock absorber lower mounting bolt. Tighten the lower mounting bolt to a torque of 68 N·m (50 ft. lbs.).

(4) Tighten the upper shock absorber mounting bolt to a torque of 99 N·m (73 ft. lbs.).

(5) Remove the jack.

(6) Install the tire and wheel assembly. Tighten all wheel nuts to a torque of 135 N·m (100 ft. lbs.).

(7) Lower the vehicle.

SPINDLE

NOTE: Before proceeding with this procedure, review SERVICE WARNINGS AND CAUTIONS at the beginning of REMOVAL AND INSTALLATION in this section.

REMOVAL

(1) Raise the vehicle. Refer to HOISTING in the LUBRICATION AND MAINTENANCE group for the proper lifting procedure.

(2) Remove the rear tire and wheel assembly.

(3) On vehicles equipped with rear drum brakes:

(a) Remove the bolts securing the drum brake flex hose to the axle trailing arm.

(b) Remove the brake drum retaining clips, then the drum (Fig. 39).

(4) On vehicles equipped with rear disc brakes:

(a) Remove the bolts securing the disc brake flex hose to the axle trailing arm.

(b) Remove the disc brake caliper guide pin bolts, then the caliper from the disc brake adapter (Fig. 40).

(c) Hang the caliper out of the way using a wire hanger or bungee cord.

2001 PT Service Manual
Publication No. 81-370-1111
TSB 26-04-01 April, 2001

REMOVAL AND INSTALLATION (Continued)

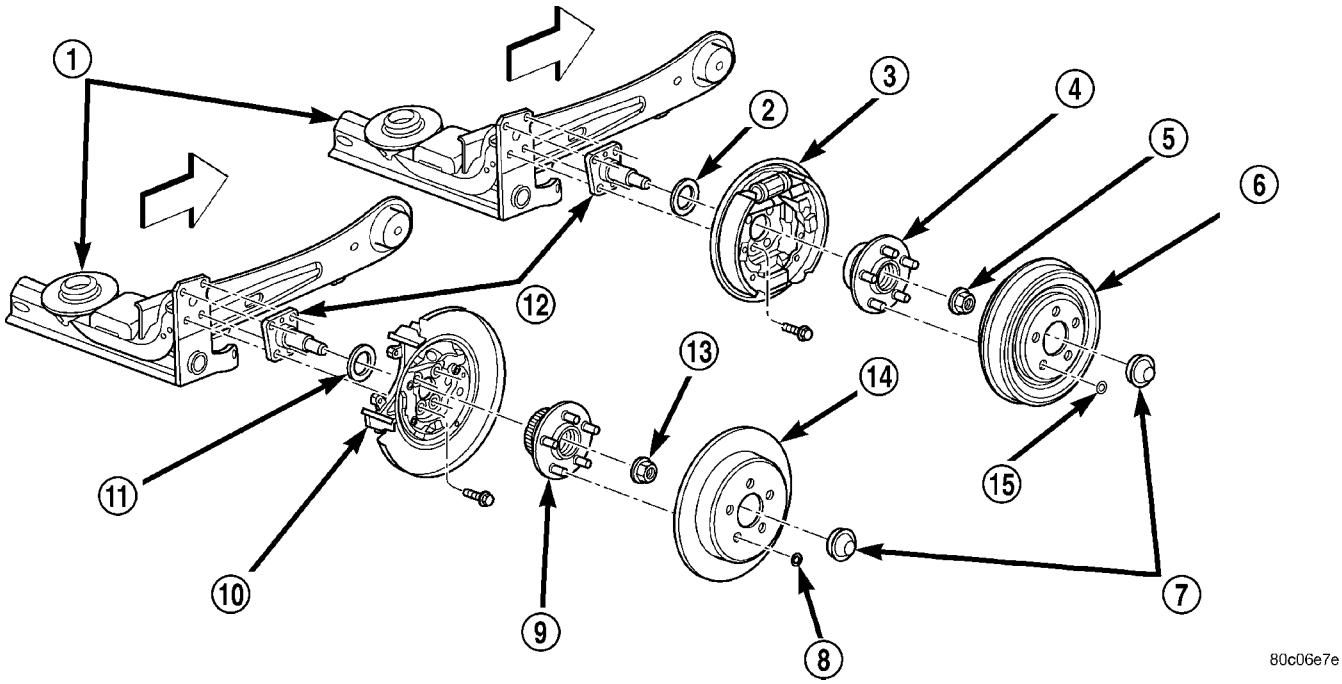

Fig. 39 Rear Brake Mounting To Axle

1 – AXLE
2 – SEAL
3 – DRUM BRAKE WITH SUPPORT PLATE
4 – HUB AND BEARING
5 – HUB NUT
6 – BRAKE DRUM
7 – DUST CAP
8 – RETAINER CLIP
9 – HUB AND BEARING
10 – DISC BRAKE ADAPTER
11 – SEAL
12 – SPINDLE
13 – HUB NUT
14 – BRAKE ROTOR
15 – RETAINER CLIP

(d) Remove the brake rotor from the rear hub and bearing.

(5) Remove the dust cap from the rear hub and bearing (Fig. 39).

(6) Remove the hub and bearing retaining nut from the spindle, then remove the hub and bearing (Fig. 39).

(7) Remove the two bolts on each axle trailing arm securing the parking brake cable and routing brackets to the axle trailing arm (Fig. 41).

(8) On vehicles equipped with antilock brakes, remove the bolt securing the wheel speed sensor to the disc brake adapter (Fig. 42). Remove the sensor from the adapter.

(9) Remove the four bolts securing the brake shoe support plate (drum brakes) or disc brake adapter, and spindle to the axle (Fig. 39).

(10) Move the support plate or disc brake adapter away from the axle. At the same time, loosen the spindle from the axle and remove it from the back of the support plate or disc brake adapter.

INSTALLATION

(1) Place a new seal on the spindle (Fig. 39).

(2) Install the spindle from the back side into the support plate (drum brakes) or disc brake adapter, then place it into its mounting position on the end of the axle (Fig. 39).

NOTE: When performing the following step, use new mounting bolts or clean and apply Mopar® Stud & Bearing Mount Adhesive or equivalent to the original mounting bolt threads before reuse.

(3) Place the support plate (drum brakes) or disc brake adapter up against the spindle, then install the four bolts securing the brake shoe support plate or disc brake adapter, and the spindle to the axle. Tighten the mounting bolts to a torque of 95 N·m (70 ft. lbs.).

(4) On vehicles equipped with antilock brakes, install the wheel speed sensor in the disc brake adapter and install the bolt securing it in place (Fig. 42). Tighten the wheel speed sensor mounting bolt to a torque of 12 N·m (105 in. lbs.).

(5) Align the parking brake cable routing brackets with their mounts on the trailing arm. Install the two bolts securing the cable and routing brackets to the trailing arm (Fig. 41). Install and tighten the mounting bolts to a torque of 11 N·m (100 in. lbs.).

(6) Install the hub and bearing on the spindle (Fig. 39). Install a NEW hub and bearing retaining nut. Tighten the retaining nut to a torque of 217 N·m (160 ft. lbs.).

REMOVAL AND INSTALLATION (Continued)

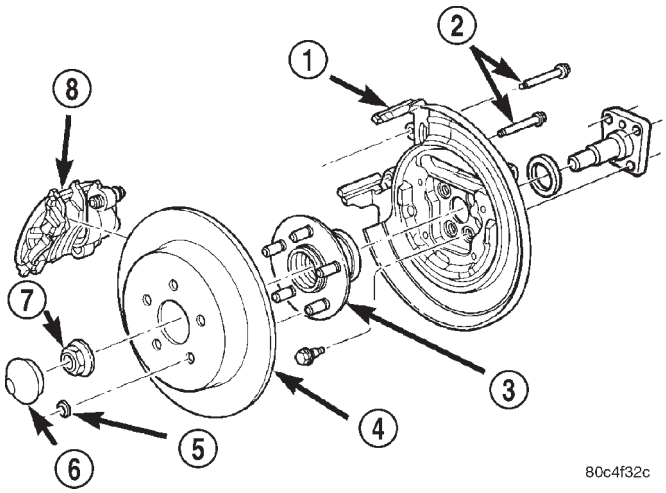

Fig. 40 Rear Disc Brakes

1 – DISC BRAKE ADAPTER
2 – GUIDE PIN BOLTS
3 – HUB AND BEARING
4 – BRAKE ROTOR
5 – RETAINER CLIP
6 – DUST CAP
7 – NUT
8 – DISC BRAKE CALIPER

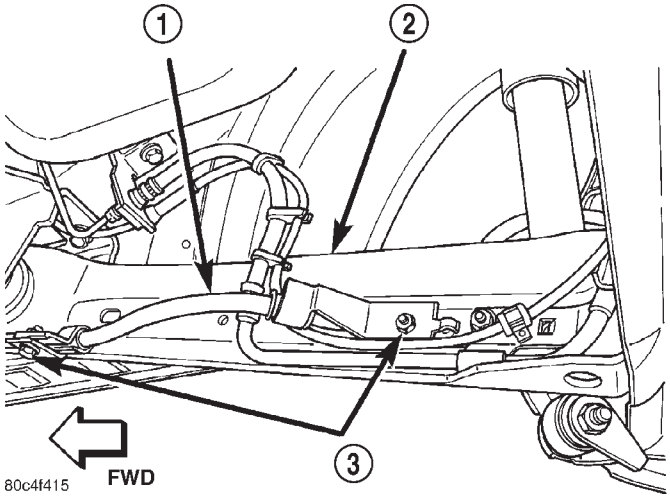

Fig. 41 Cable Routing Bracket Fasteners

1 – CABLE
2 – ARM
3 – FASTENERS

(7) Install the hub and bearing dust cap.

NOTE: On vehicles with rear drum brakes, before installing the drum, it may be necessary to adjust the rear brakes. Refer to ADJUSTMENTS in the BRAKES section.

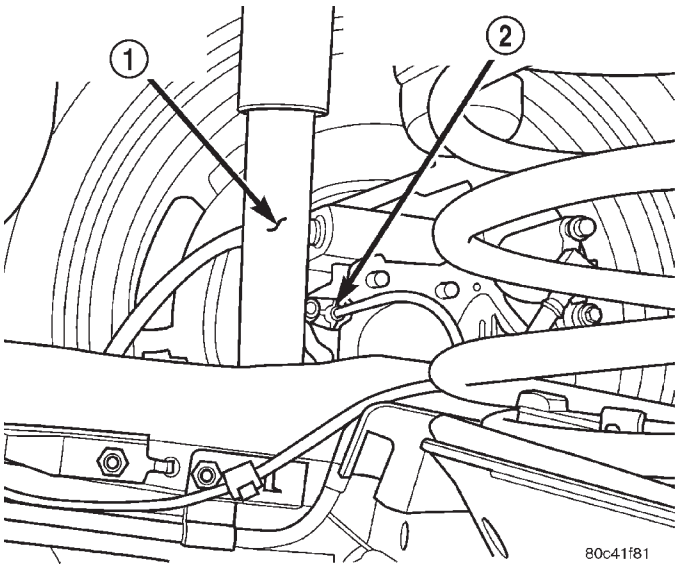

Fig. 42 Wheel Speed Sensor

1 – SHOCK ABSORBER
2 – RIGHT REAR WHEEL SPEED SENSOR

(8) On drum brake equipped vehicles, install the brake drum.

(9) On vehicles equipped with rear disc brakes (Fig. 40):

(a) Install the brake rotor.

(b) Install the disc brake caliper.

(c) Install the caliper guide pin bolts, then tighten them to a torque of 22 N·m (192 in. lbs.).

(10) Install the bolts securing the disc brake flex hose or drum brake flex hose to the axle trailing arm.

(11) Install the rear tire and wheel assembly. Tighten all wheel nuts to a torque of 135 N·m (100 ft. lbs.).

(12) Lower the vehicle.

STABILIZER BAR (REAR)

NOTE: Before proceeding with this procedure, review SERVICE WARNINGS AND CAUTIONS at the beginning of REMOVAL AND INSTALLATION in this section.

REMOVAL AND INSTALLATION (Continued)

REMOVAL

(1) Raise the vehicle. Refer to HOISTING in the LUBRICATION AND MAINTENANCE group for the proper lifting procedure.

(2) Remove both rear wheel and tire assemblies from the vehicle.

(3) Remove the nut from the end of each rear stabilizer bar link bolt fastening the bar to the link (Fig. 43). Pull the bolt out far enough to free the stabilizer bar.

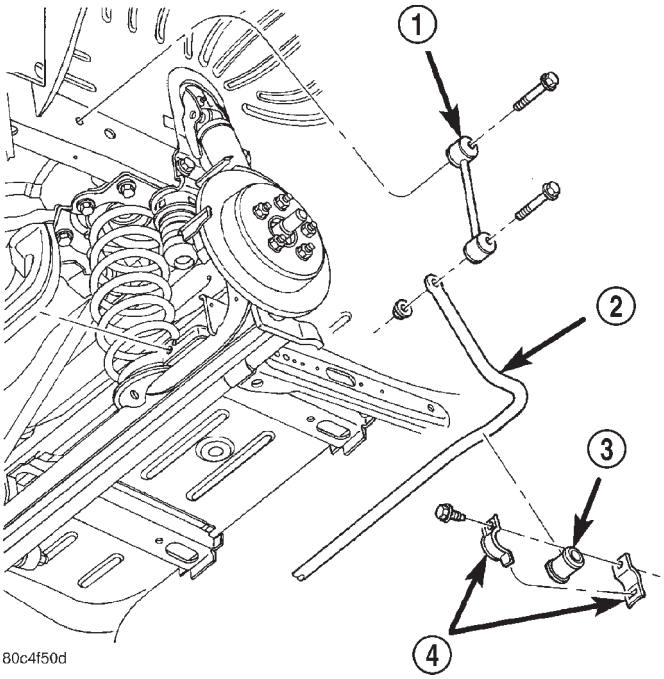

Fig. 43 Bar And Link Mounting

1 – LINK
2 – STABILIZER BAR
3 – CUSHION
4 – RETAINER

(4) While holding the rear stabilizer bar, remove the bolts securing the cushion retainers to the rear axle, then remove the cushion retainers, cushions and stabilizer bar from the vehicle as an assembly.

(5) To remove the cushions from the stabilizer bar, refer to stabilizer bar cushions found in this section.

INSTALLATION

(1) To install the cushions and retainers on the stabilizer bar, refer to stabilizer bar cushions found in this section.

(2) Install the stabilizer bar, cushions and retainers on the vehicle as an assembly.

(3) Hook the lower ends of the cushion retainers in the slot in the back of the axle, then rotate the opposite end of the retainers upward so the mounting bolts can be installed. Install the mounting bolt though each cushion retainer, into the threads in the rear axle (Fig. 43). Tighten the rear stabilizer bar cushion retainer bolts at the axle to a torque of 54 N·m (40 ft. lbs.).

(4) Install each stabilizer bar link bolt and nut attaching the ends of the stabilizer bar to the links (Fig. 43). Do not tighten the bolt and nut at this time.

(5) Install both tire and wheel assemblies on the vehicle. Tighten the wheel mounting stud nuts in proper sequence until all nuts are torqued to half specification. Repeat the tightening sequence, this time, to full specified torque of 135 N·m (100 ft. lbs.).

(6) Lower the vehicle to ground level (curb height).

(7) Tighten the stabilizer bar link bolts and nuts to a torque of 61 N·m (45 ft. lbs.).

STABILIZER BAR CUSHIONS (REAR)

NOTE: Before proceeding with this procedure, review SERVICE WARNINGS AND CAUTIONS at the beginning of REMOVAL AND INSTALLATION in this section.

REMOVAL

(1) Remove the rear stabilizer bar from the axle following the Stabilizer Bar Removal procedure found in this section.

(2) Bend back the crimp tab at the top of the retainer which secures the two halves of each cushion retainer together. Remove the retainer halves (Fig. 43).

(3) The cushions can be removed from the bar utilizing the preformed slit in each cushion and peeling them off the bar.

INSTALLATION

(1) Install the cushions on the stabilizer bar by opening the slit in each cushion and wrapping it around the bar. When installed properly, the slit in the cushion should face toward the front of the car once the bar is installed.

(2) Perform the following on each stabilizer bar retainer:

(a) Hook the lower end of each retainer halve to the other (Fig. 43).

(b) Install the two halves of the retainer over the cushions, matching the contour of each retainer with its cushion. The slit in the cushion should face straight toward the forward halve of the retainer.

(c) Fold the crimp tab on the forward retainer halve over the rear halve crimping the two halves together.

(3) Install the stabilizer bar on the rear axle following the Stabilizer Bar Installation procedure found in this section.

REMOVAL AND INSTALLATION (Continued)

STABILIZER BAR LINK (REAR)

NOTE: Before proceeding with this procedure, review SERVICE WARNINGS AND CAUTIONS at the beginning of REMOVAL AND INSTALLATION in this section.

REMOVAL

(1) Raise the vehicle. Refer to HOISTING in the LUBRICATION AND MAINTENANCE group for the proper lifting procedure.

(2) Remove the appropriate rear wheel and tire assembly from the vehicle.

(3) Remove the nut and bolt from the lower end of the stabilizer bar link attaching it to the stabilizer bar (Fig. 43).

(4) Remove the bolt retaining the link to the rear frame rail (Fig. 43), then remove the stabilizer bar link from the vehicle.

INSTALLATION

(1) Reinstall stabilizer bar link, starting the bolt retaining the link to frame rail (Fig. 43). Do not tighten the bolt at this time.

(2) Install the lower bolt and nut attaching the stabilizer bar link to the stabilizer bar (Fig. 43). Do not tighten the bolt and nut at this time.

(3) Install tire and wheel assembly on the vehicle. Tighten the wheel mounting stud nuts in proper sequence until all nuts are torqued to half specification. Repeat the tightening sequence, this time, to full specified torque of 135 N·m (100 ft. lbs.).

(4) Lower the vehicle to ground level (curb height).

(5) Tighten the stabilizer bar link upper bolt and lower nut to a torque of 61 N·m (45 ft. lbs.).

WATTS BELL CRANK

NOTE: Before proceeding with this procedure, review SERVICE WARNINGS AND CAUTIONS at the beginning of REMOVAL AND INSTALLATION in this section.

REMOVAL

(1) Raise the vehicle. Refer to HOISTING in the LUBRICATION AND MAINTENANCE group for the proper lifting procedure.

(2) Remove the nut securing the bell crank pivot bolt in the center of the axle (Fig. 44).

(3) With the bolt still installed, slide the bell crank away from the axle just enough to remove the nuts securing both links to the bell crank (Fig. 44). Remove the nuts.

(4) Install the Remover, Special Tool MB991113, on each link ball joint at the bell crank and release ball joint from the bell crank.

(5) Remove the pivot bolt and bell crank from the vehicle.

INSTALLATION

(1) Install the pivot bolt through the front of the watts link bell crank (Fig. 44). Make sure the words “BACK UP” are towards the rear (Fig. 45).

(2) Start the pivot bolt with the bell crank attached into the front of the axle center mounting hole (Fig. 44).

CAUTION: Although both ends of the bell crank appear to be the same, they are not. When installing the watts links and bell crank, make sure the bell crank is properly positioned. When mounted properly, the words “BACK UP” should be able to be read from the rear over the top of the axle (Fig. 45).

NOTE: The upper link extends from the right side of the vehicle to the upper end of the bell crank while the lower link extends from the left side of the vehicle to the lower end of the bell crank.

(3) Install the upper and lower links to the bell crank (Fig. 44). Install the nuts on the ball joint studs and tighten them to a torque of 14 N·m (10 ft. lbs.) plus an additional 180° turn after torque is met.

(4) Slide the bell crank pivot bolt all the way through the axle.

(5) Place the washer and nut on the end of the pivot bolt and tighten it to a torque of 122 N·m (90 ft. lbs.).

(6) Verify the words “BACK UP” can be read on the bell crank from the rear over the top of the axle.

(7) Lower the vehicle to the ground.

WATTS LINK

NOTE: Before proceeding with this procedure, review SERVICE WARNINGS AND CAUTIONS at the beginning of REMOVAL AND INSTALLATION in this section.

REMOVAL AND INSTALLATION (Continued)

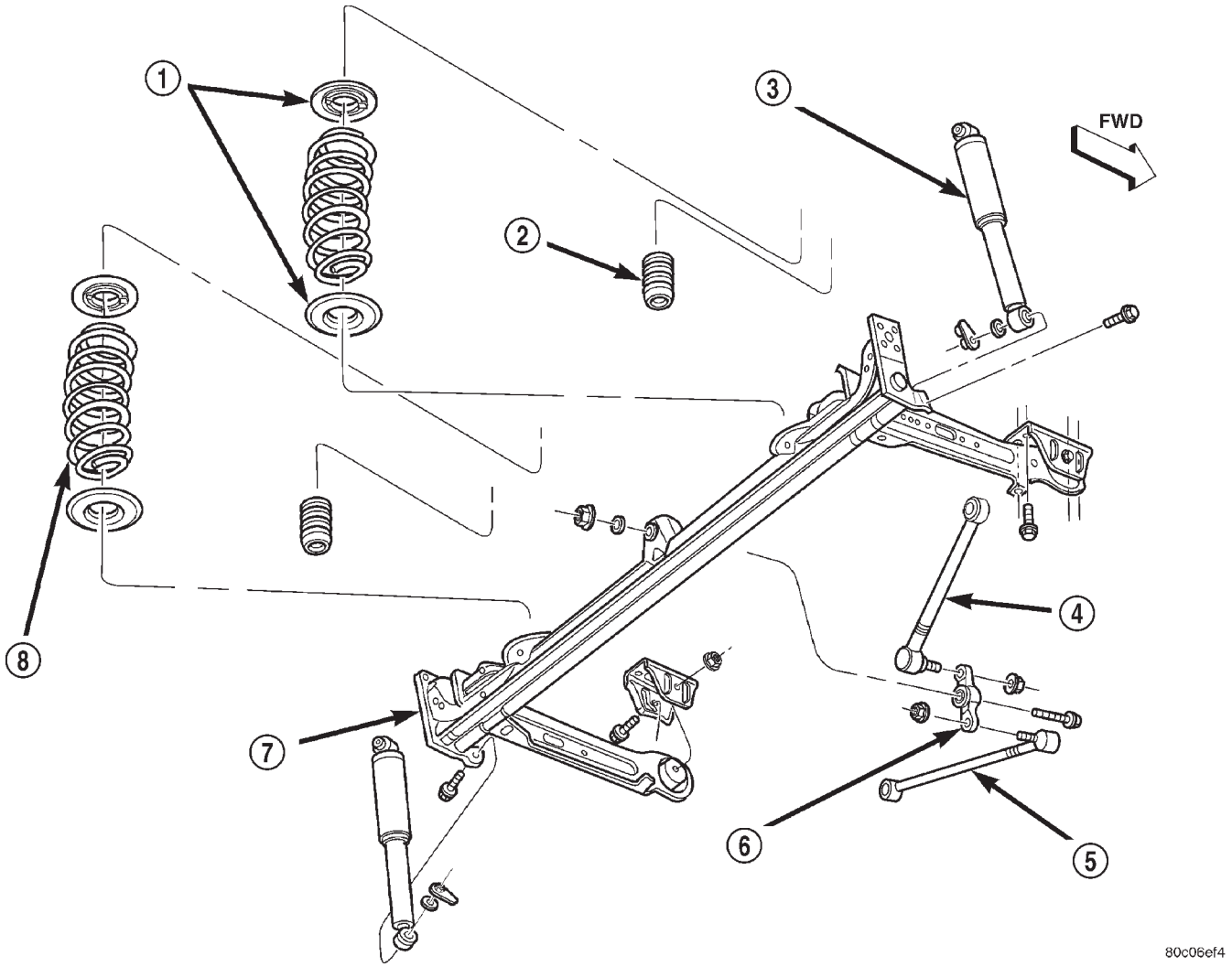

Fig. 44 Rear Suspension

1 – ISOLATORS
2 – JOUNCE BUMPER
3 – SHOCK ABSORBER
4 – WATTS LINK (UPPER)
5 – WATTS LINK (LOWER)
6 – BELL CRANK
7 – AXLE
8 – COIL SPRING

REMOVAL AND INSTALLATION (Continued)

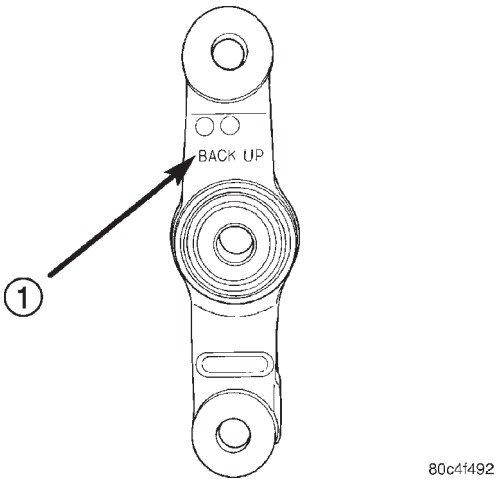

Fig. 45 Bell Crank

1 – INSTALLATION DIRECTION

REMOVAL

(1) Raise the vehicle. Refer to HOISTING in the LUBRICATION AND MAINTENANCE group for the proper lifting procedure.

(2) If the lower watts link is being removed, perform the following first, otherwise proceed to the next step.

(a) Remove the nut securing the bell crank pivot bolt in the center of the axle (Fig. 44).

(b) With the bolt still installed, slide the bell crank away from the axle just enough to remove the nut securing the lower link to the bell crank (Fig. 44).

(3) Remove the nut securing the ball joint to the bell crank (Fig. 44).

(4) Install the Remover, Special Tool MB991113, on the link ball joint at the bell crank and release ball joint from the bell crank.

(5) Remove the bolt securing the link to the bracket on the body of the vehicle. Remove the link.

INSTALLATION

CAUTION: When installing the link, DO NOT attempt to turn the ball joint end of the link independently.

(1) Making sure the ball joint end is positioned properly for mounting to the bell crank (Fig. 44), install the link into the bracket on the body of the vehicle.

(2) Install the bolt (and flag nut for upper link) securing the link to the bracket, but do not fully tighten it at this time. It must be tightened when the vehicle is at curb height.

NOTE: The upper link extends from the right side of the vehicle to the upper end of the bell crank while the lower link extends from the left side of the vehicle to the lower end of the bell crank.

(3) Install the upper or lower link to the bell crank (Fig. 44). Install the nut on the ball joint stud and tighten it to a torque of 14 N·m (10 ft. lbs.) plus an additional 180° turn after torque is met.

(4) If the lower link is the link being installed, perform the following, otherwise proceed to the next step.

(a) Slide the bell crank pivot bolt all the way through the axle.

(b) Place the washer and nut on the end of the pivot bolt and tighten it to a torque of 122 N·m (90 ft. lbs.).

CAUTION: Although both ends of the bell crank appear to be the same, they are not. When installing the watts links or bell crank, make sure the bell crank is properly positioned. When mounted properly, the words “BACK UP” should be able to be read from the rear over the top of the axle (Fig. 45).

(5) Verify the words “BACK UP” can be read on the bell crank from the rear over the top of the axle (Fig. 45). If they cannot be read at this position, the link or bell crank is not installed properly and must be removed and reinstalled so that the words “BACK UP” can be read on the upper rear of the bell crank once installed.

(6) Lower the vehicle to the ground.

(7) Place the vehicle on an alignment rack or drive-on hoist.

(8) With the suspension at curb height, tighten the link mounting bolt at the body bracket to a torque of 81 N·m (60 ft. lbs.).

WHEEL MOUNTING STUDS (REAR)

CAUTION: If a wheel attaching stud needs to be replaced in the hub and bearing assembly, DO NOT hammer studs out of the hub flange. If a stud is removed by hammering it out of the bearing flange, damage to the hub and bearing assembly will occur leading to premature bearing failure.

CAUTION: The following procedure must be used when replacing rear wheel attaching studs.

NOTE: Rear hub and bearing assembly removal is required, first, before attaching studs can be replaced.

REMOVAL AND INSTALLATION (Continued)

REMOVAL

(1) Position the hub and bearing assembly under a hydraulic press ram, supported by a 21 mm. deep well impact socket under the stud to be replaced (Fig. 46).

Take care to keep hub and bearing assembly from falling during stud removal. This could damage the assembly.

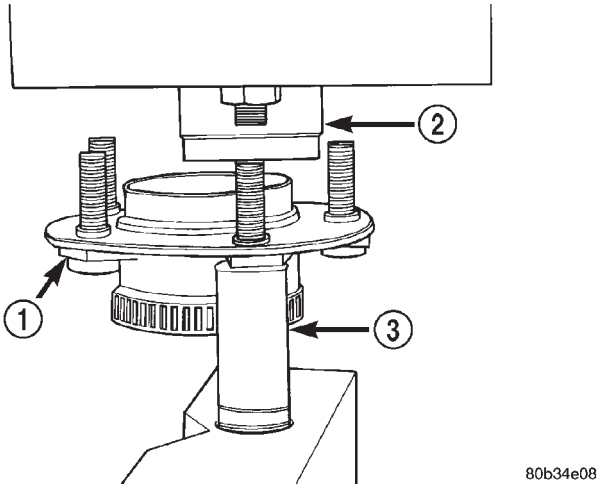

Fig. 46 Wheel Stud Removal

1 – HUB AND BEARING ASSEMBLY
2 – PRESS RAM
3 – 21mm IMPACT SOCKET

(2) Press the stud out of the hub flange, and into the socket well.

(3) Remove the hub and bearing assembly from the press.

(4) Remove the stud from the socket.

INSTALLATION

(1) Install wheel stud into stud hole in hub and bearing assembly.

(2) Position the hub and bearing assembly face down with stud pointing down into the well of the 21 mm. socket. The hydraulic press ram must line up with the stud (Fig. 47).

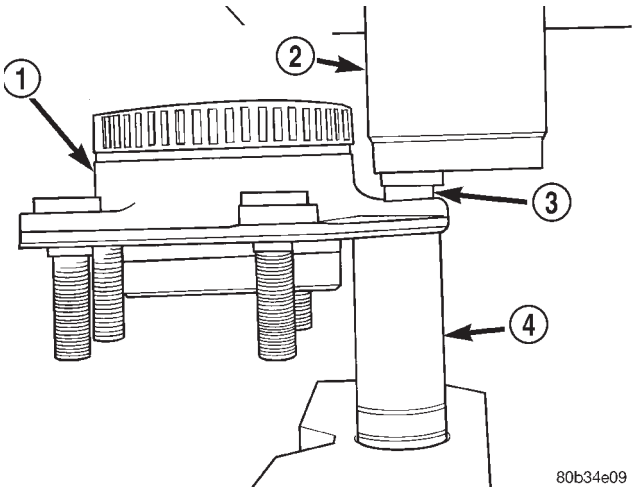

Fig. 47 Wheel Stud Installation

1 – HUB AND BEARING ASSEMBLY
2 – PRESS RAM
3 – WHEEL STUD
4 – 21mm IMPACT SOCKET

(3) Press the stud into the hub flange until it bottoms.

(4) Remove the hub and bearing assembly from the press.

SPECIFICATIONS

REAR SUSPENSION FASTENER TORQUE

DESCRIPTION	TORQUE
Axle:	
Bracket To Body Bolts	54 N·m (40 ft. lbs.)
Brake/Spindle Bolts	95 N·m (70 ft. lbs.)
Parking Brake Cable Bracket Bolts	11 N·m (100 in. lbs.)
Trailing Arm Pivot Bolt	108 N·m (80 ft. lbs.)
Hub And Bearing:	
Spindle Retaining Nut	217 N·m (160 ft. lbs.)
Wheel Mounting Nuts	135 N·m (100 ft. lbs.)
Shock Absorber:	
Upper Mounting Bolt	99 N·m (73 ft. lbs.)
Lower Mounting Bolt	68 N·m (50 ft. lbs.)
Stabilizer Bar:	
Cushion Retainer Bolt	54 N·m (40 ft. lbs.)
Link Bolts And Nuts	61 N·m (45 ft. lbs.)
Watts Link Assembly:	
Bell Crank Pivot Bolt	122 N·m (90 ft. lbs.)
Link Ball Joint Nut	14 N·m (10 ft. lbs.) + 180° Turn
Link Body Bracket Bolt	81 N·m (60 ft. lbs.)

SPECIAL TOOLS

REAR SUSPENSION

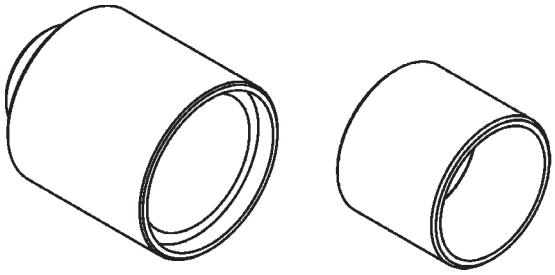

Remover/Installer 8405

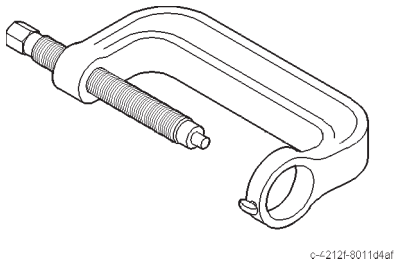

Press, Ball Joint C-4212F

DIFFERENTIAL AND DRIVELINE

TABLE OF CONTENTS

page

DESCRIPTION AND OPERATION
FRONT DRIVESHAFTS 1
DIAGNOSIS AND TESTING
DRIVESHAFT DIAGNOSIS. 2
REMOVAL AND INSTALLATION
DRIVESHAFTS 3
DISASSEMBLY AND ASSEMBLY
DRIVESHAFT RECONDITION 7
INNER TRIPOD JOINT SEAL BOOT 9
OUTER C/V JOINT SEAL BOOT 13
SPECIFICATIONS
TORQUE 17
SPECIAL TOOLS
DRIVESHAFT. 17

DESCRIPTION AND OPERATION

FRONT DRIVESHAFTS

Vehicles equipped with either an automatic or manual transmission use an unequal–length driveshaft system.

The system incorporates two driveshaft assemblies (left and right) that consist of an inner and outer constant velocity (CV) joint and a solid interconnecting shaft (Fig. 1). The right driveshaft is longer than the left due to transaxle packaging and powertrain design.

Driveshafts used on both the right and left sides of the vehicle use a tuned rubber damper weight mounted to the interconnecting shaft (Fig. 1). The damper weight applications vary by which side of the vehicle the driveshaft is located on and the transmission application of the vehicle. When replacing a driveshaft, be sure the replacement driveshaft has the same damper weight as the original.

Both driveshaft assemblies use the same type of inner and outer joints. The inner joint of both driveshaft assemblies is a tripod joint, and the outer joint of both driveshaft assemblies is a Rzeppa joint. Both tripod joints and Rzeppa joints are true constant velocity (C/V) joint assemblies. The inner tripod joint allows for the changes in driveshaft length through the jounce and rebound travel of the front suspension.

On vehicles equipped with ABS brakes, the outer C/V joint is equipped with a tone wheel used to determine vehicle speed for ABS brake operation.

The inner tripod joint of both driveshafts is splined into the transaxle side gears. The inner tripod joints are retained in the side gears of the transaxle using a snap ring located in the stub shaft of the tripod joint. The outer C/V joint has a stub shaft that is splined into the wheel hub and retained by a hub nut using a nut lock and cotter pin (Fig. 2).

NOTE: This vehicle does not use a rubber–lip bearing seal as on previous front–wheel–drive cars to prevent contamination of the front wheel bearing. On these vehicles, the face of the outer C/V joint fits deeply into the steering knuckle, using a close outer C/V joint–to–steering knuckle fit. This design deters direct water splash on bearing seal while allowing any water that gets in, to run out the bottom of the steering knuckle bearing bore. It is important to thoroughly clean the outer C/V joint and the wheel bearing area in the steering knuckle before it is assembled after servicing.

DESCRIPTION AND OPERATION (Continued)

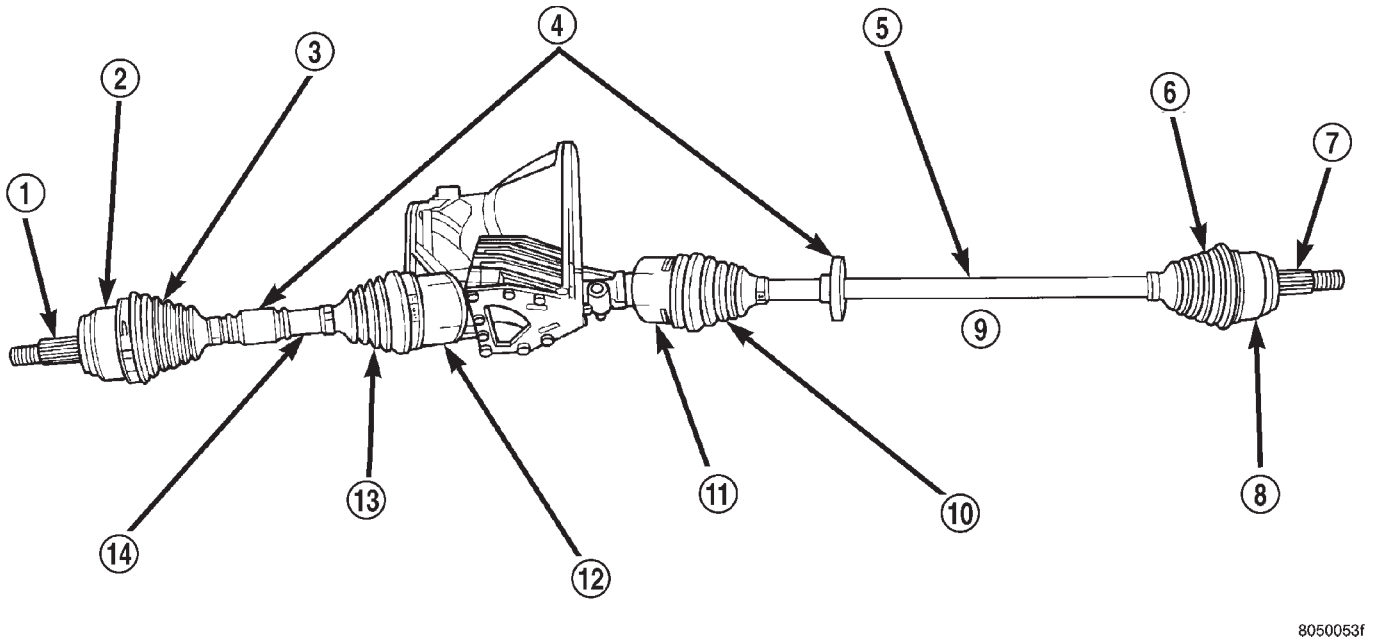

Fig. 1 Unequal Length Driveshaft System

1 – STUB AXLE
2 – OUTER C/V JOINT
3 – OUTER C/V JOINT BOOT
4 – TUNED RUBBER DAMPER WEIGHT
5 – INTERCONNECTING SHAFT
6 – OUTER C/V JOINT BOOT
7 – STUB AXLE
8 – OUTER C/V JOINT
9 – RIGHT DRIVESHAFT
10 – INNER TRIPOD JOINT BOOT
11 – INNER TRIPOD JOINT
12 – INNER TRIPOD JOINT
13 – INNER TRIPOD JOINT BOOT
14 – INTERCONNECTING SHAFT LEFT DRIVESHAFT

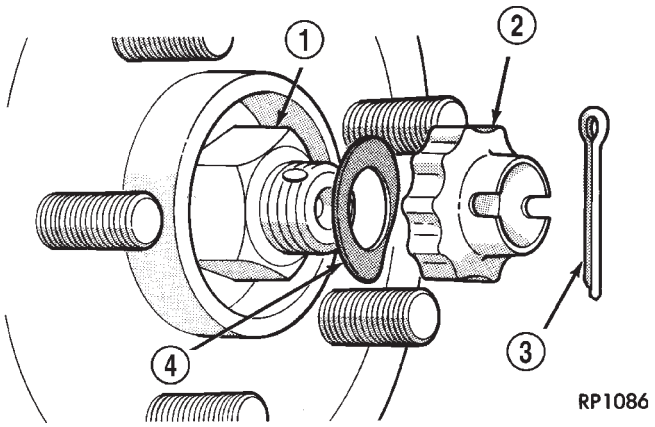

Fig. 2 Driveshaft Retaining Hardware

1 – HUB NUT
2 – NUT LOCK
3 – COTTER PIN
4 – SPRING WASHER

DIAGNOSIS AND TESTING

DRIVESHAFT DIAGNOSIS

VEHICLE INSPECTION

(1) Check for grease in the vicinity of the inboard tripod joint and outboard C/V joint; this is a sign of inner or outer joint seal boot or seal boot clamp damage.

(2) A light film of grease may appear on the right inner tripod joint seal boot; this is considered normal and should not require replacement of the seal boot. The right inner tripod joint seal boot is made of silicone rubber; which will allow the weeping (sweating) of the joint lubricant to pass through it while in operation.

NOISE AND/OR VIBRATION IN TURNS

A clicking noise and/or a vibration in turns could be caused by one of the following conditions.

(1) Damaged outer C/V or inner tripod joint seal boot or seal boot clamps. This will result in the loss and/or contamination of the joint grease, resulting in inadequate lubrication of the joint.

DIAGNOSIS AND TESTING (Continued)

(2) Noise may also be caused by another component of the vehicle coming in contact with the driveshafts.

CLUNKING NOISE DURING ACCELERATION

This noise may be a result of one of the following conditions:

(1) A torn seal boot on the inner or outer joint of the driveshaft assembly.

(2) A loose or missing clamp on the inner or outer joint of the driveshaft assembly.

(3) A damaged or worn driveshaft C/V joint.

SHUDDER OR VIBRATION DURING ACCELERATION

(1) A worn or damaged driveshaft inner tripod joint.

(2) A sticking tripod joint spider assembly (inner tripod joint only).

(3) Improper wheel alignment. See Wheel Alignment in this group for alignment checking and setting procedures and specifications.

VIBRATION AT HIGHWAY SPEEDS

(1) Foreign material (mud, etc.) packed on the backside of the wheel(s).

(2) Out of balance front tires or wheels. See Group 22, Wheels And Tires for the required balancing procedure.

(3) Improper tire and/or wheel runout. See Group 22, Wheels And Tires for the required runout checking procedure.

REMOVAL AND INSTALLATION

DRIVESHAFTS

CAUTION: Boot sealing is vital to retain special lubricants and to prevent foreign contaminants from entering the C/V joint. Mishandling, such as allowing the assemblies to dangle unsupported, or pulling or pushing the ends can cut boots or damage C/V joints. During removal and installation procedures, always support both ends of the driveshaft to prevent damage.

REMOVAL

CAUTION: The driveshaft, when installed, acts as a bolt and secures the front hub/bearing assembly. If vehicle is to be supported or moved on its wheels with a driveshaft removed, install a PROPER–SIZED BOLT AND NUT through front hub. Tighten bolt and nut to 244 N·m (180 ft. lbs.). This will ensure that the hub bearing cannot loosen.

(1) Disconnect battery negative cable.

(2) Place transaxle in gated park.

(3) Raise vehicle on hoist.

(4) Remove wheel and tire assembly (Fig. 3).

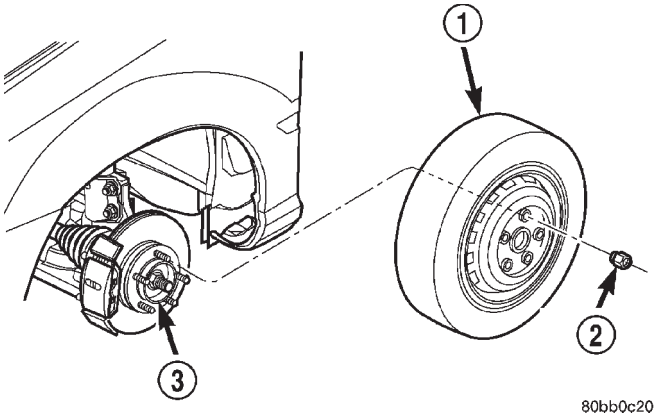

Fig. 3 Wheel and Tire Removal

1 – WHEEL/TIRE ASSY.
2 – LUG NUT (5)
3 – HUB

(5) Remove the cotter pin, nut lock, and spring washer from the end of the outer C/V joint stub axle (Fig. 4).

(6) Remove the driveshaft to hub and bearing retaining nut and washer.

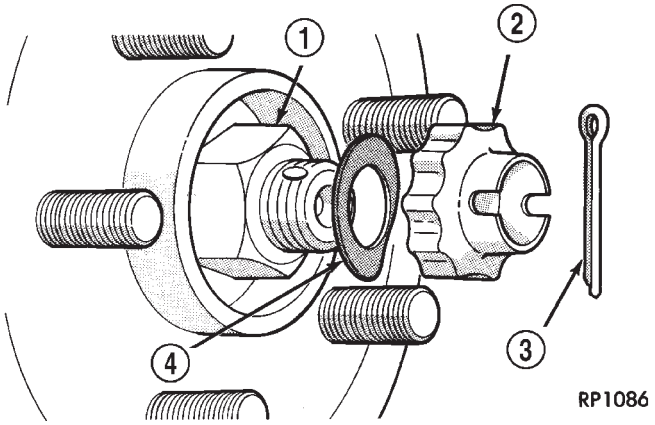

Fig. 4 Driveshaft Retaining Hardware

1 – HUB NUT
2 – NUT LOCK
3 – COTTER PIN
4 – SPRING WASHER

(7) If equipped with ABS, disconnect the front wheel speed sensor and secure harness out of the way.

REMOVAL AND INSTALLATION (Continued)

(8) Remove nut and bolt (Fig. 5) retaining ball joint stud into steering knuckle.

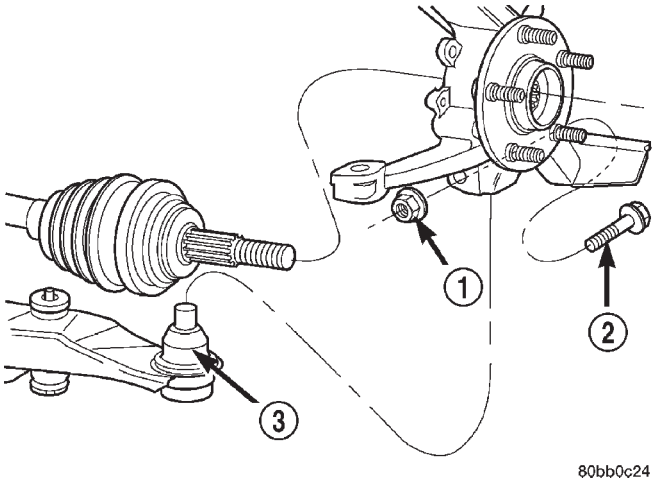

Fig. 5 Steering Knuckle at Lower Control Arm Ball Joint

1 – NUT
2 – BOLT
3 – BALL JOINT

NOTE: Use caution when separating ball joint stud from steering knuckle, so ball joint seal does not get damaged.

(9) Separate ball joint stud from steering knuckle by prying down on lower control arm (Fig. 6).

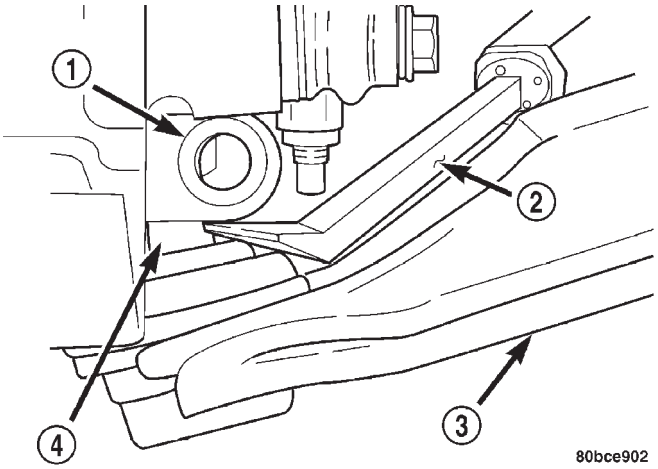

Fig. 6 Separating Lower Control Arm from Steering Knuckle

1 – STEERING KNUCKLE
2 – PRY BAR
3 – LOWER CONTROL ARM
4 – BALL JOINT STUD

NOTE: Care must be taken not to separate the inner C/V joint during this operation. Do not allow driveshaft to hang by inner C/V joint, driveshaft must be supported.

(10) Remove driveshaft from steering knuckle by pulling outward on knuckle while pressing in on driveshaft. Support outer end of driveshaft assembly. If difficulty in separating driveshaft from steering knuckle is encountered, perform the following procedure:

(a) Install Puller, Special Tool 6790 on hub and bearing assembly (Fig. 7), using wheel lug nuts to secure it in place.

(b) Install a wheel lug nut on wheel stud to protect the threads on the stud. Install a flat blade pry tool to keep hub from turning. Using Puller, force the driveshaft outer stub axle from the hub and bearing assembly (Fig. 8).

(c) Pull steering knuckle assembly out and away from outer C/V joint of the driveshaft assembly as shown in (Fig. 5).

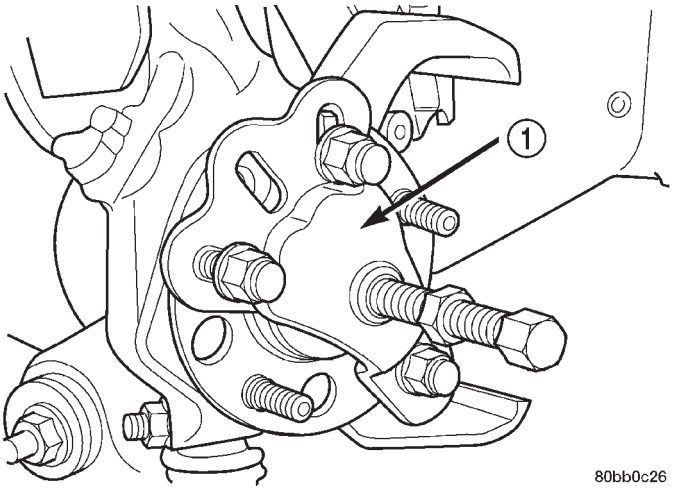

Fig. 7 Puller Installed On Hub/Bearing Assembly

1 – TOOL 6790

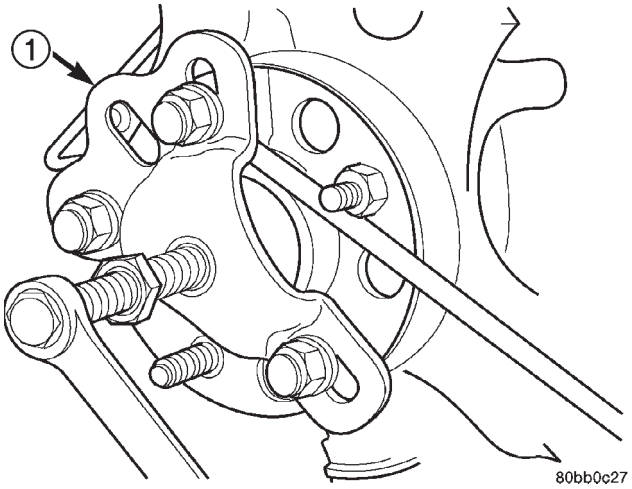

Fig. 8 Removing Stub Axle From Hub/Bearing

1 – TOOL 6790

(11) Support outer end of the driveshaft assembly.

REMOVAL AND INSTALLATION (Continued)

NOTE: Removal of the inner tripod joints is made easier if you apply outward pressure on the joint as you strike the punch with a hammer.

(12) Remove the inner tripod joints from the side gears of the transaxle using a punch to dislodge the inner tripod joint retaining ring from the transaxle side gear. If removing the right side inner tripod joint, position the punch against the inner tripod joint (Fig. 9). Strike the punch sharply with a hammer to dislodge the right inner joint from the side gear. If removing the left side inner tripod joint, position the punch in the groove of the inner tripod joint (Fig. 10). Strike the punch sharply with a hammer to dislodge the left inner tripod joint from the side gear.

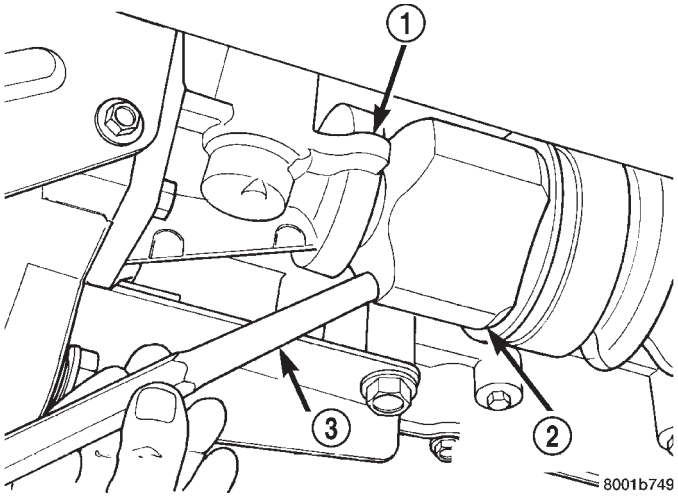

Fig. 9 Disengaging Right Inner Tripod Joint from Transaxle

1 – TRANSAXLE
2 – RIGHT INNER TRIPOD JOINT
3 – PUNCH

(13) Hold inner tripod joint and interconnecting shaft of driveshaft assembly (Fig. 11). Remove inner tripod joint from transaxle by pulling it straight out of transaxle side gear and transaxle oil seal. **When removing tripod joint, do not let spline or snap ring drag across sealing lip of the transaxle to tripod joint oil seal. When tripod joint is removed from transaxle, some fluid will leak out.**

CAUTION: The driveshaft, when installed, acts as a bolt and secures the front hub/bearing assembly. If vehicle is to be supported or moved on its wheels with a driveshaft removed, install a PROPER–SIZED BOLT AND NUT through front hub. Tighten bolt and nut to 244 N·m (180 ft. lbs.). This will ensure that the hub bearing cannot loosen.

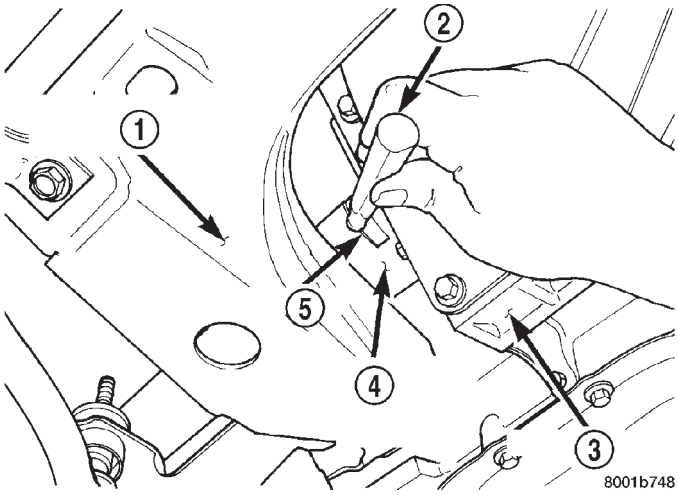

Fig. 10 Disengaging Left Inner Tripod Joint from Transaxle

1 – FRONT SUSPENSION CROSSMEMBER
2 – DRIFT
3 – TRANSAXLE
4 – DRIVESHAFT INNER TRIPOD JOINT
5 – NOTCH

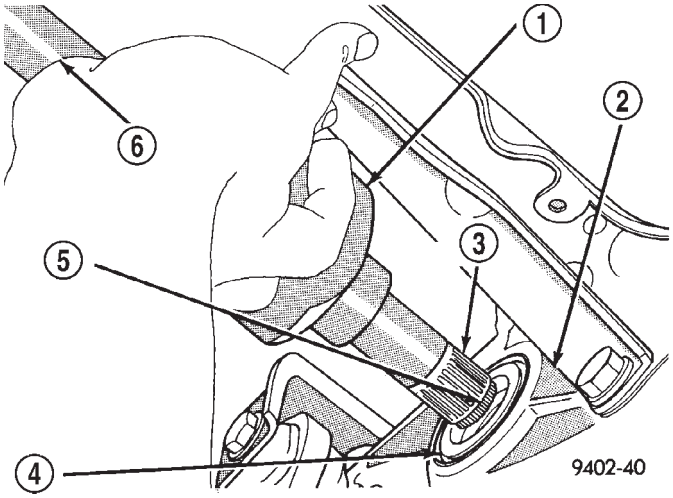

Fig. 11 Tripod Joint Removal from Transaxle

1 – INNER TRIPOD JOINT
2 – TRANSAXLE
3 – SPLINE
4 – OIL SEAL
5 – SNAP RING
6 – INTERCONNECTING SHAFT

REMOVAL AND INSTALLATION (Continued)

INSTALLATION

(1) Thoroughly clean spline and oil seal sealing surface, on tripod joint. Lightly lubricate oil seal sealing surface on tripod joint with fresh clean transmission lubricant.

(2) Holding driveshaft assembly by tripod joint and interconnecting shaft, install tripod joint into transaxle side gear as far as possible by hand.

(3) Carefully align tripod joint with transaxle side gears. Then grasp driveshaft interconnecting shaft and push tripod joint into transaxle side gear until fully seated. **Test that snap ring is fully engaged with side gear by attempting to remove tripod joint from transaxle by hand. If snap ring is fully engaged with side gear, tripod joint will not be removable by hand.**

(4) Clean all debris and moisture out of steering knuckle (Fig. 12).

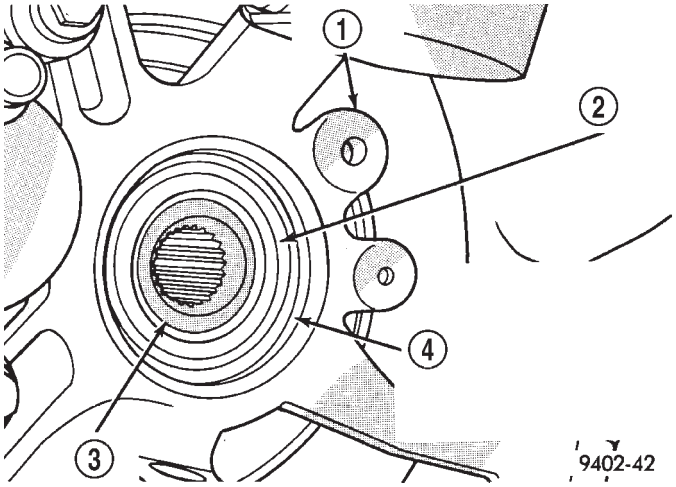

Fig. 12 Steering Knuckle to C/V Joint Sealing Area

1 – STEERING KNUCKLE
2 – WHEEL BEARING
3 – FRONT HUB
4 – THIS AREA OF THE STEERING KNUCKLE IS TO BE FREE OF ALL DEBRIS AND MOISTURE BEFORE INSTALLING DRIVE SHAFT IN STEERING KNUCKLE

(5) Ensure that front of outer C/V joint, which fits into steering knuckle (Fig. 13), is free of debris and moisture before assembling into steering knuckle.

(6) Slide driveshaft back into front hub. Install steering knuckle onto the ball joint stud (Fig. 14).

NOTE: At this point, the outer joint will not seat completely into the front hub. The outer joint will be pulled into hub and seated when the hub nut is installed and torqued.

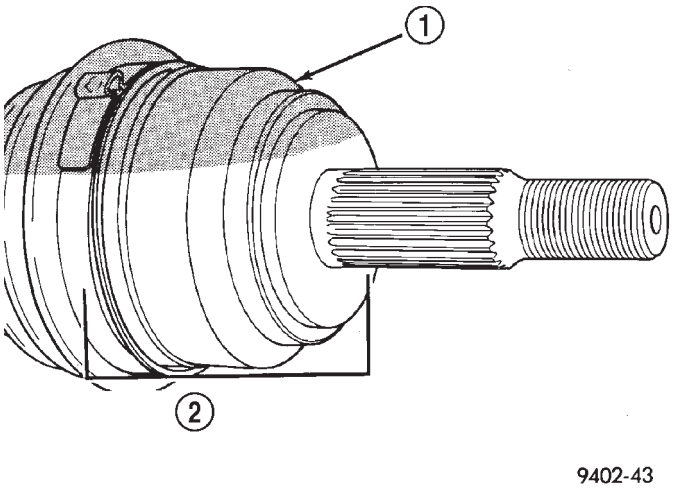

Fig. 13 Outer C/V Joint Inspection

1 – OUTER C/V JOINT
2 – THIS AREA OF OUTER C/V JOINT MUST BE FREE OF ALL DEBRIS AND MOISTURE, BEFORE INSTALLATION INTO STEERING KNUCKLE.

(7) Install a **NEW** steering knuckle to ball joint stud bolt and nut (Fig. 14). Tighten the nut and bolt to 95 N·m (70 ft. lbs.).

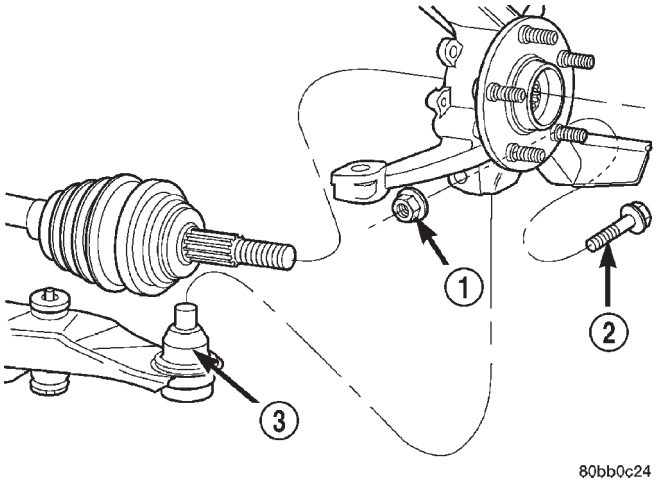

Fig. 14 Driveshaft Installation Into Hub And Steering Knuckle

1 – NUT
2 – BOLT
3 – BALL JOINT

REMOVAL AND INSTALLATION (Continued)

(8) Clean all foreign matter from threads of driveshaft outer stub axle. Install washer and hub nut onto the threads of the stub axle and tighten nut to 244 N·m (180 ft. lbs.) (Fig. 15).

(9) Install spring washer, nut lock, and cotter pin (Fig. 15).

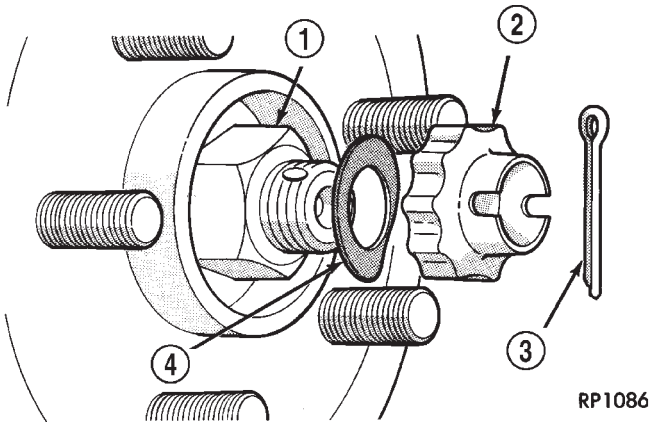

Fig. 15 Driveshaft Retaining Hardware

1 – HUB NUT
2 – NUT LOCK
3 – COTTER PIN
4 – SPRING WASHER

(10) Install front wheel and tire assembly. Install front wheel lug nuts (Fig. 16) and tighten to 128 N·m (100 ft. lbs.).

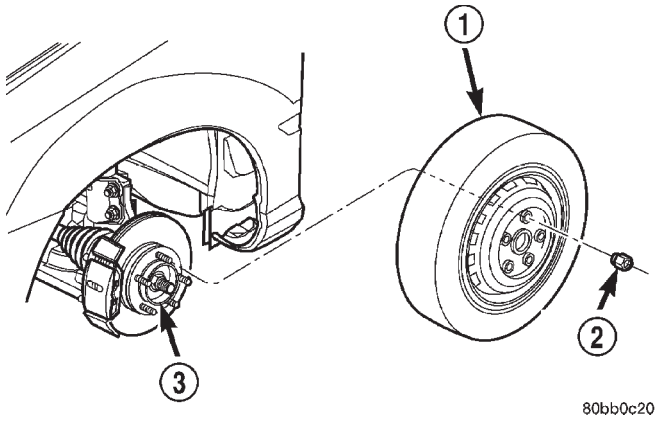

Fig. 16 Wheel and Tire Installation

1 – WHEEL/TIRE ASSY.
2 – LUG NUT (5)
3 – HUB

(11) Check for correct fluid level in transaxle assembly. Refer to TRANSAXLE for the correct fluid level checking procedure for the type of transaxle being checked.

(12) Lower vehicle.

(13) Connect battery negative cable.

DISASSEMBLY AND ASSEMBLY

DRIVESHAFT RECONDITION

NOTE: The only service that is to be performed on the driveshaft assemblies is the replacement of the driveshaft seal boots.

If any failure of internal driveshaft components is diagnosed during a vehicle road test or disassembly of the driveshaft, the driveshaft will need to be replaced as an assembly.

NOTE: Lubricant requirements and quantities are different for inner joints than for outer joints. Use only the recommended lubricants in the required quantities when servicing driveshaft assemblies.

See (Fig. 17) for a detailed view of front driveshaft construction.

DISASSEMBLY AND ASSEMBLY (Continued)

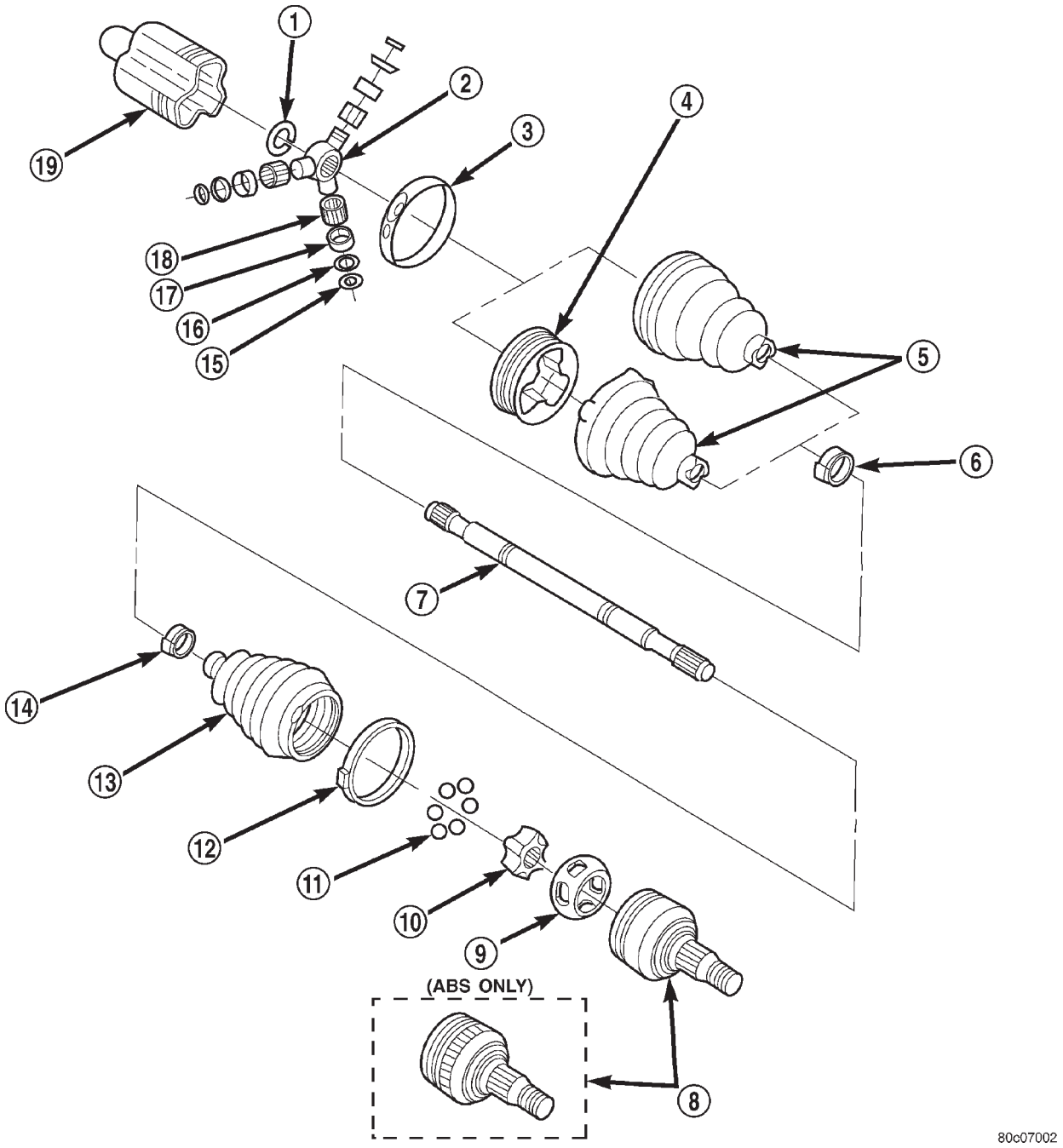

Fig. 17 Driveshaft Assembly Components (Exploded View)

1 – RING
2 – SPIDER
3 – CLAMP
4 – BUSHING
5 – BOOT
6 – CLAMP
7 – SHAFT
8 – RACE
9 – CAGE
10 – RACE
11 – BALL
12 – CLAMP
13 – BOOT
14 – CLAMP
15 – RING
16 – RETAINER
17 – BALL
18 – ROLLER
19 – HOUSING

DISASSEMBLY AND ASSEMBLY (Continued)

INNER TRIPOD JOINT SEAL BOOT

REMOVAL

To remove sealing boot from driveshaft for replacement, the driveshaft assembly must be removed from the vehicle. See Driveshaft Removal and Installation in this section for the required driveshaft removal and replacement procedure.

The inner tripod joints use no internal retention in the tripod housing to keep the spider assembly in the housing. Therefore, do not pull on the interconnecting shaft to disengage tripod housing from transmission stub shaft. Removal in this manner will cause damage to the inboard joint sealing boots.

(1) Remove the driveshaft requiring boot replacement from the vehicle. See Driveshaft Removal and Installation in this section for the required driveshaft removal procedure.

(2) Remove large boot clamp that retains inner tripod joint sealing boot to tripod joint housing (Fig. 18) and discard. Then remove small clamp that retains inner tripod joint sealing boot to interconnecting shaft and discard. Remove the sealing boot from the tripod housing and slide it down the interconnecting shaft.

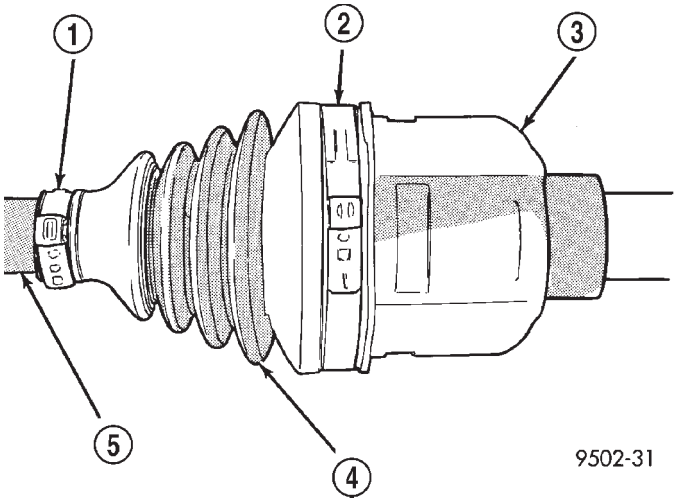

Fig. 18 Inner Tripod Joint Sealing Boot Clamps

1 – SMALL CLAMP
2 – LARGE CLAMP
3 – INNER TRIPOD JOINT
4 – SEALING BOOT
5 – INTERCONNECTING SHAFT

CAUTION: When removing the spider joint from the tripod joint housing, hold the rollers in place on the spider trunions to prevent the rollers and needle bearings from falling away.

(3) Slide the interconnecting shaft and spider assembly out of the tripod joint housing (Fig. 19).

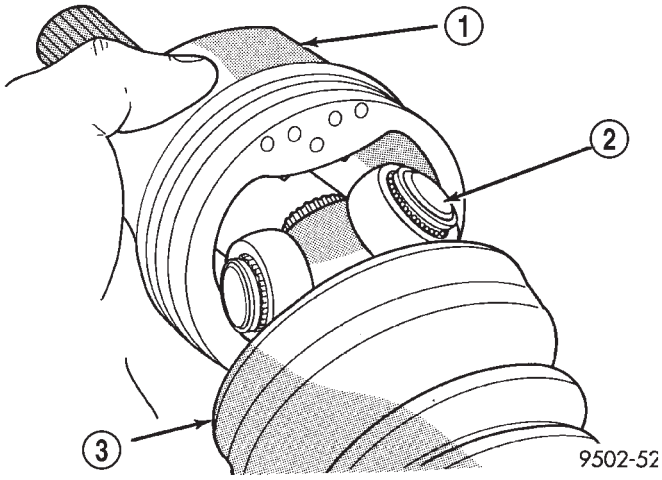

Fig. 19 Spider Assembly Joint Removal from Housing

1 – TRIPOD JOINT HOUSING
2 – SPIDER ASSEMBLY
3 – SEALING BOOT

(4) Remove snap ring that retains spider assembly to interconnecting shaft (Fig. 20). Remove the spider assembly from interconnecting shaft. If spider assembly will not come off interconnecting shaft by hand, it can be removed by tapping spider assembly with a brass drift (Fig. 21). **Do not hit the outer tripod bearings in an attempt to remove spider assembly from interconnecting shaft.**

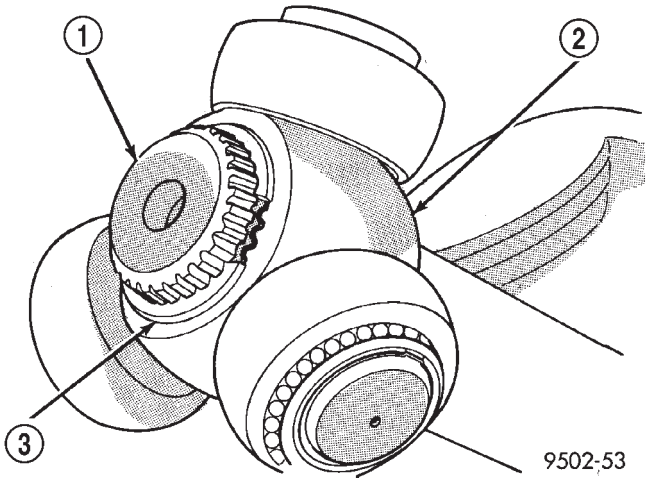

Fig. 20 Spider Assembly Retaining Snap Ring

1 – INTERCONNECTING SHAFT
2 – SPIDER ASSEMBLY
3 – RETAINING SNAP RING

DISASSEMBLY AND ASSEMBLY (Continued)

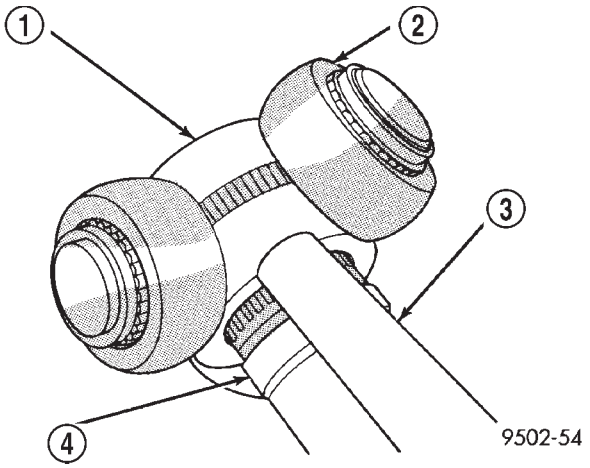

Fig. 21 Spider Assembly Removal from Interconnecting Shaft

1 – SPIDER ASSEMBLY
2 – DO NOT HIT SPIDER ASSEMBLY BEARINGS WHEN REMOVING SPIDER ASSEMBLY
3 – BRASS DRIFT
4 – INTERCONNECTING SHAFT

(5) Slide sealing boot off interconnecting shaft.

(6) Thoroughly clean and inspect spider assembly, tripod joint housing, and interconnecting shaft for any signs of excessive wear. **If any parts show signs of excessive wear, the driveshaft assembly will require replacement. Component parts of these driveshaft assemblies are not serviceable.**

INSTALLATION

NOTE: The inner tripod joint sealing boots are made from two different types of material. High–temperature applications use silicone rubber whereas standard temperature applications use Hytrel plastic. The silicone sealing boots are soft and pliable. The Hytrel sealing boots are stiff and rigid. The replacement sealing boot MUST BE the same type of material as the sealing boot that was removed.

(1) Slide inner tripod joint seal boot retaining clamp, onto interconnecting shaft. Then slide the replacement inner tripod joint sealing boot onto interconnecting shaft. **Inner tripod joint seal boot MUST be positioned on interconnecting shaft, so the raised bead on the inside of the seal boot is in groove on interconnecting shaft (Fig. 22).**

(2) Install spider assembly onto interconnecting shaft with chamfer on spider assembly toward interconnecting shaft (Fig. 23). Spider assembly must be installed on interconnecting shaft far enough to fully install spider retaining snap ring. If spider assembly will not fully install on interconnecting shaft by hand, it can be installed by tapping the spider body with a brass drift (Fig. 24). **Do not hit the outer tripod bearings in an attempt to install spider assembly on interconnecting shaft.**

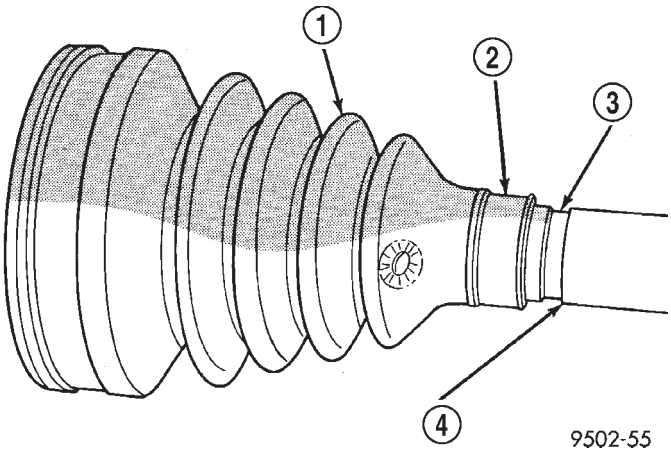

Fig. 22 Sealing Boot Installation on Interconnecting Shaft

1 – SEALING BOOT
2 – RAISED BEAD IN THIS AREA OF SEALING BOOT
3 – GROOVE
4 – INTERCONNECTING SHAFT

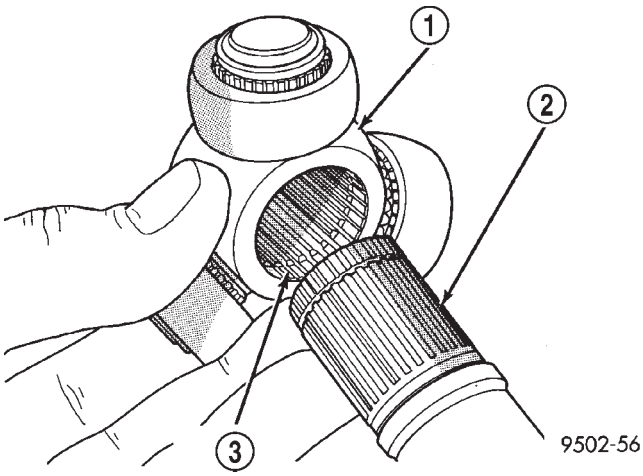

Fig. 23 Spider Assembly Installation on Interconnecting Shaft

1 – SPIDER ASSEMBLY
2 – INTERCONNECTING SHAFT
3 – CHAMFER

(3) Install the spider assembly to interconnecting shaft retaining snap ring into groove on end of interconnecting shaft (Fig. 25). Be sure the snap ring is fully seated into groove on interconnecting shaft.

(4) Distribute 1/2 the amount of grease provided in the seal boot service package (DO NOT USE ANY OTHER TYPE OF GREASE) into tripod housing. Put the remaining amount into the sealing boot.

DISASSEMBLY AND ASSEMBLY (Continued)

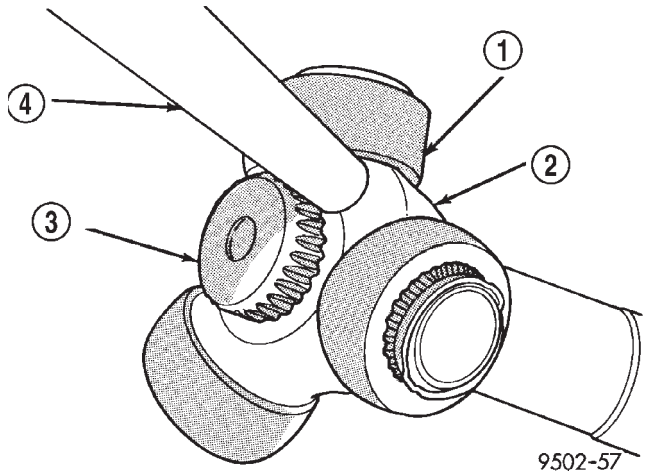

Fig. 24 Installing Spider Assembly On Interconnecting Shaft

1 – DO NOT HIT BEARINGS WHEN INSTALLING THE SPIDER ASSEMBLY
2 – SPIDER ASSEMBLY
3 – INTERCONNECTING SHAFT
4 – BRASS DRIFT

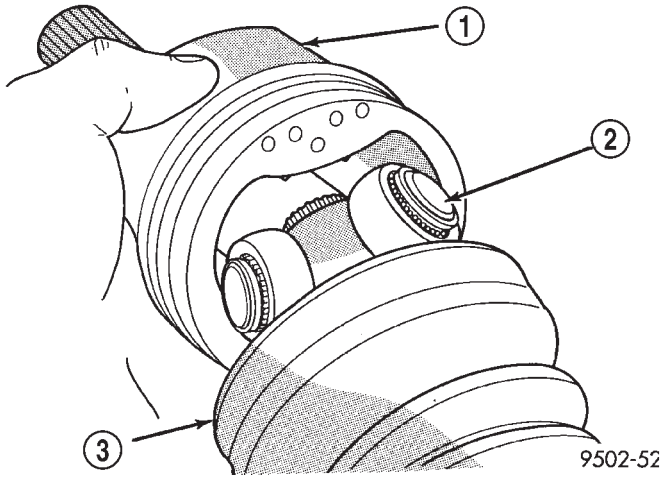

Fig. 26 Installing Tripod Housing on Spider Assembly

1 – TRIPOD JOINT HOUSING
2 – SPIDER ASSEMBLY
3 – SEALING BOOT

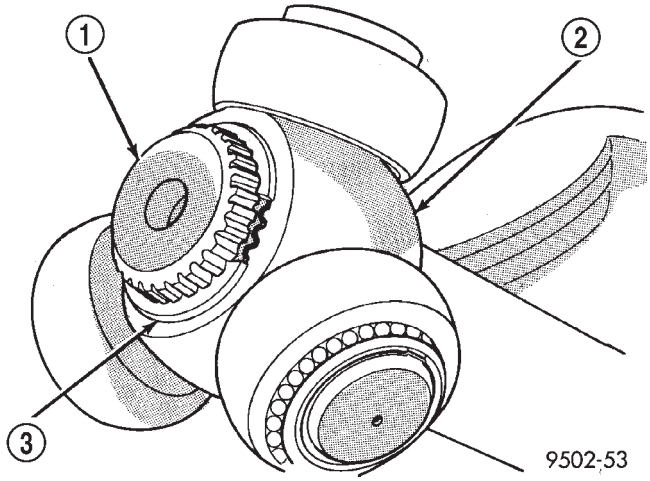

Fig. 25 Spider Assembly Retaining Snap Ring Installed

1 – INTERCONNECTING SHAFT
2 – SPIDER ASSEMBLY
3 – RETAINING SNAP RING

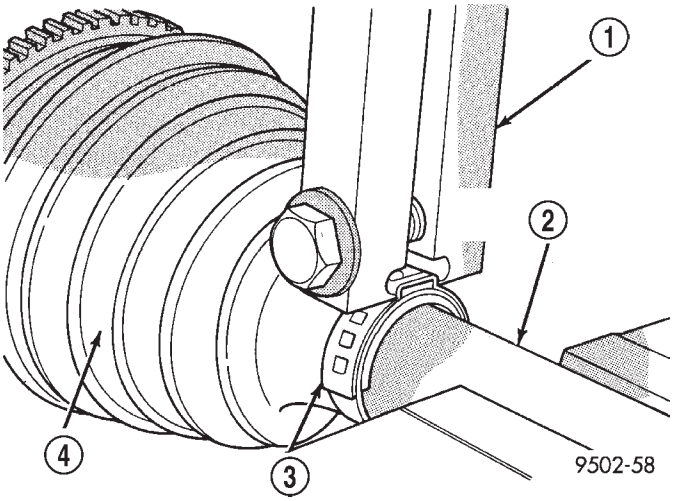

Fig. 27 Crimping Tool Installed on Sealing Boot Clamp

1 – SPECIAL TOOL C-4975A
2 – INTERCONNECTING SHAFT
3 – CLAMP
4 – SEALING BOOT

(5) Align tripod housing with spider assembly and then slide tripod housing over spider assembly and interconnecting shaft (Fig. 26).

(6) Install inner tripod joint seal boot to interconnecting shaft clamp evenly on sealing boot.

(7) Clamp sealing boot onto interconnecting shaft using crimper, Special Tool C-4975-A and the following procedure. Place crimping tool C-4975-A over bridge of clamp (Fig. 27). Tighten nut on crimping tool C-4975-A until jaws on tool are closed completely together, face to face (Fig. 28).

CAUTION: Seal must not be dimpled, stretched, or out–of–shape in any way. If seal is NOT shaped correctly, equalize pressure in seal and shape it by hand.

(8) Position sealing boot into the tripod housing retaining groove. Install seal boot retaining clamp evenly on sealing boot.

DISASSEMBLY AND ASSEMBLY (Continued)

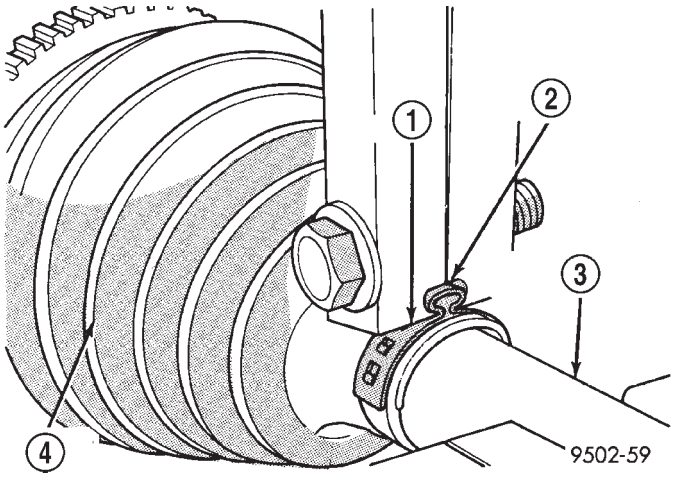

Fig. 28 Sealing Boot Retaining Clamp Installed

1 – CLAMP
2 – JAWS OF SPECIAL TOOL C-4975A MUST BE CLOSED COMPLETELY TOGETHER HERE
3 – INTERCONNECTING SHAFT
4 – SEALING BOOT

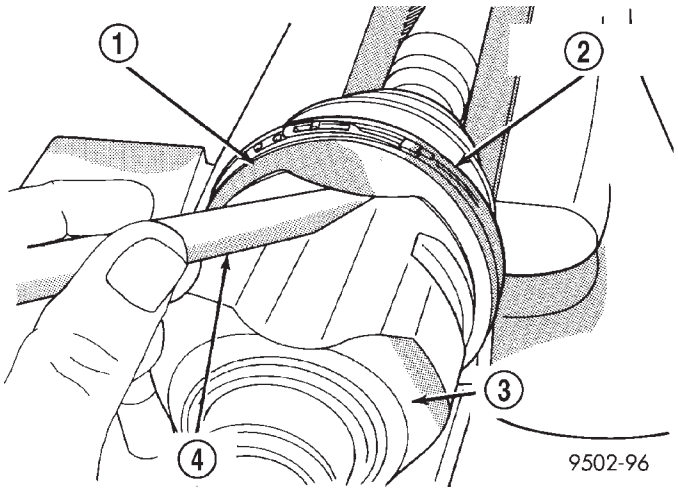

Fig. 29 Trim Stick Inserted for Venting Tripod Joint

1 – INNER TRIPOD JOINT SEALING BOOT
2 – SEALING BOOT CLAMP
3 – INNER TRIPOD JOINT HOUSING
4 – TRIM STICK

CAUTION: The following positioning procedure determines the correct air pressure inside the inner tripod joint assembly prior to clamping the sealing boot to inner tripod joint housing. If this procedure is not done prior to clamping sealing boot to tripod joint housing, boot durability can be adversely affected.

CAUTION: When venting the inner tripod joint assembly, use care so inner tripod sealing boot does not get punctured or, in any other way, damaged. If sealing boot is punctured or damaged while being vented, the sealing boot can not be used.

(9) Insert a trim stick between the tripod joint and the sealing boot to vent inner tripod joint assembly (Fig. 29). **When inserting trim stick between tripod housing and sealing boot, ensure trim stick is held flat and firmly against the tripod housing. If this is not done, damage to the sealing boot can occur.** If inner tripod joint has a Hytrel (hard plastic) sealing boot, be sure trim stick is inserted between soft rubber insert and tripod housing, and not the hard plastic sealing boot and soft rubber insert.

(10) With trim stick inserted between sealing boot and tripod joint housing, position inner tripod joint on driveshaft until correct sealing boot edge to edge length is obtained for type of sealing boot material being used (Fig. 30) (Fig. 31). Then remove the trim stick.

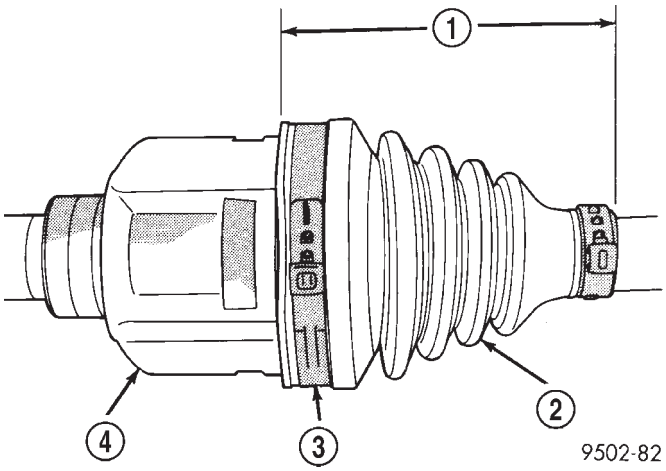

Fig. 30 Sealing Boot End to End Length with Hytrel Boot

1 – 107 MILLIMETERS
2 – HYTREL SEALING BOOT
3 – SEALING BOOT CLAMP
4 – INNER TRIPOD JOINT

(11) Clamp tripod joint sealing boot to tripod joint using required procedure for type of boot clamp application. If seal boot uses crimp type boot clamp, clamp sealing boot onto tripod housing using crimper, Special Tool C-4975-A. Place crimping tool C-4975-A over bridge of clamp (Fig. 32). Tighten nut on crimping tool C-4975-A until jaws on tool are closed completely together, face–to–face (Fig. 33).

DISASSEMBLY AND ASSEMBLY (Continued)

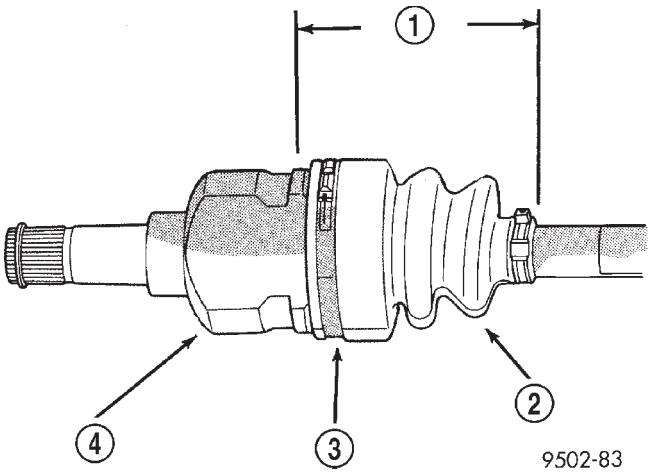

Fig. 31 Sealing Boot End to End Length with Silicone Boot

1 – 115 MILLIMETERS
2 – SILICONE SEALING BOOT
3 – CLAMP
4 – INNER TRIPOD JOINT

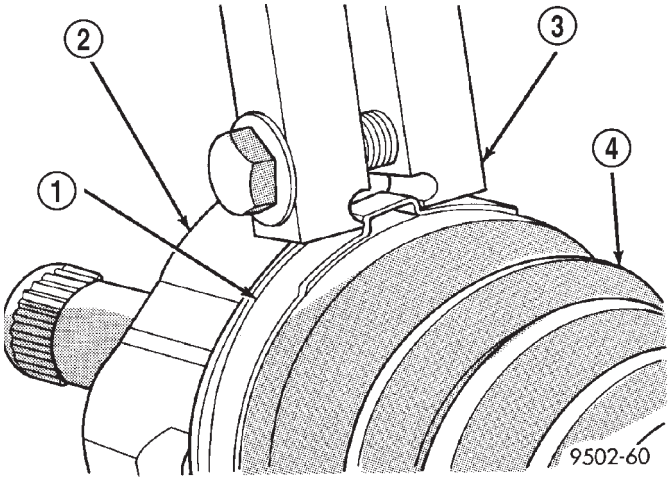

Fig. 32 Crimping Tool Installed on Sealing Boot Clamp

1 – CLAMP
2 – TRIPOD JOINT HOUSING
3 – SPECIAL TOOL C-4975A
4 – SEALING BOOT

(12) If seal boot uses low profile latching type boot clamp, clamp sealing boot onto tripod housing using clamp locking tool, Snap-On® YA3050 (or an equivalent). Place prongs of clamp locking tool in the holes of the clamp (Fig. 34). Squeeze tool together until top band of clamp is latched behind the two tabs on lower band of clamp (Fig. 35).

(13) Install the driveshaft requiring boot replacement back on the vehicle. See Driveshaft Removal and Installation in this section for the required driveshaft installation procedure.

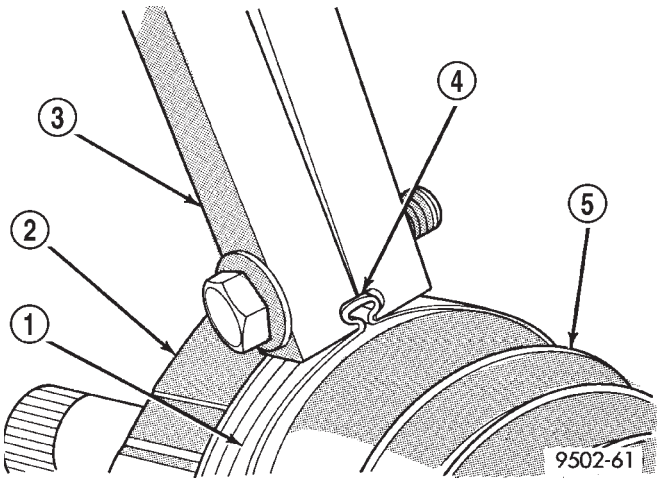

Fig. 33 Sealing Boot Retaining Clamp Installed

1 – CLAMP
2 – TRIPOD HOUSING
3 – SPECIAL TOOL C-4975A
4 – JAWS OF SPECIAL TOOL C-4975A MUST BE CLOSED COMPLETELY TOGETHER HERE
5 – SEALING BOOT

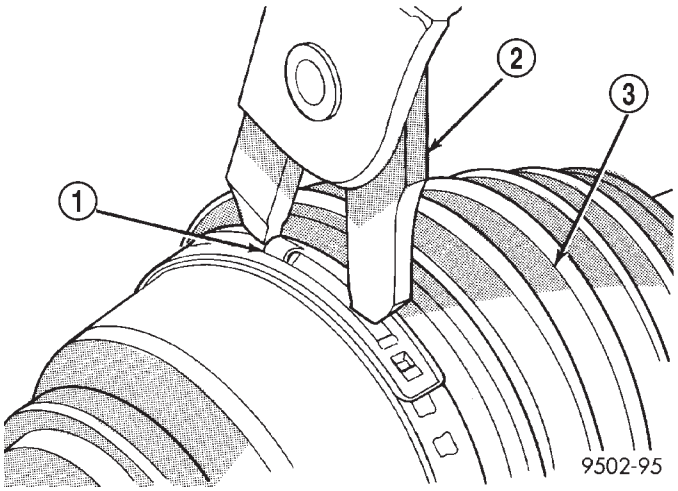

Fig. 34 Clamping Tool Installed on Sealing Boot Clamp

1 – CLAMP
2 – SPECIAL TOOL YA3050
3 – SEALING BOOT

OUTER C/V JOINT SEAL BOOT

REMOVAL

To remove outer C/V joint sealing boot from a driveshaft for replacement, the driveshaft assembly must be removed from the vehicle. See Driveshaft Removal and Installation for the required driveshaft removal and replacement procedure.

DISASSEMBLY AND ASSEMBLY (Continued)

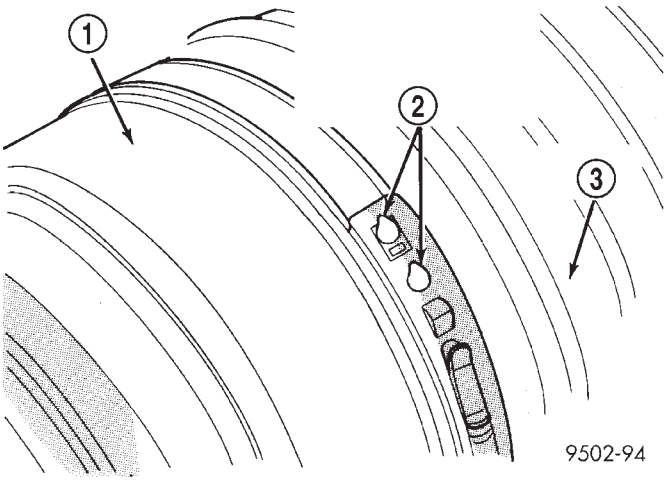

Fig. 35 Sealing Boot Clamp Correctly Installed

1 – INNER TRIPOD JOINT HOUSING
2 – TOP BAND OF CLAMP MUST BE RETAINED BY TABS AS SHOWN HERE TO CORRECTLY LATCH BOOT CLAMP
3 – SEALING BOOT

(1) Remove driveshaft assembly requiring boot replacement from vehicle. See Driveshaft Removal and Installation for the required driveshaft removal procedure.

(2) Remove large boot clamp retaining C/V joint sealing boot to C/V joint housing (Fig. 36) and discard. Remove small clamp that retains outer C/V joint sealing boot to interconnecting shaft and discard. Remove sealing boot from outer C/V joint housing and slide it down interconnecting shaft.

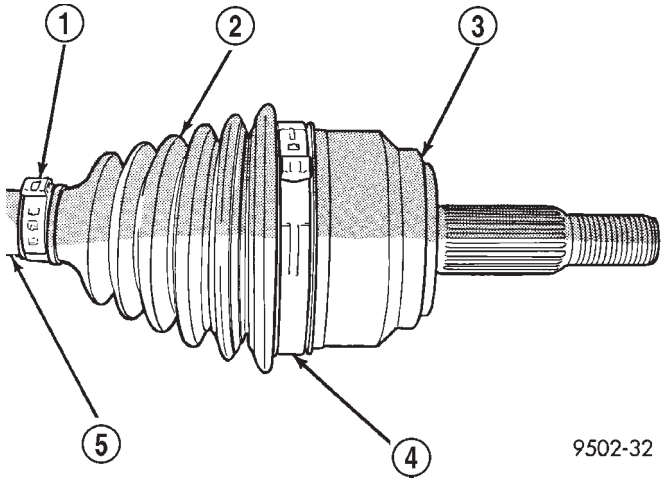

Fig. 36 Outer C/V Joint Seal Boot Clamps

1 – SMALL CLAMP
2 – SEALING BOOT
3 – OUTER C/V JOINT HOUSING
4 – LARGE CLAMP
5 – INTERCONNECTING SHAFT

(3) Wipe away grease to expose outer C/V joint and interconnecting shaft.

(4) Remove outer C/V joint from interconnecting shaft using the following procedure: Support interconnecting shaft in a vise **equipped with protective caps on jaws of vise to prevent damage to interconnecting shaft.** Then, using a **soft–faced hammer,** sharply hit the end of the C/V joint housing to dislodge housing from internal circlip on interconnecting shaft (Fig. 37). Then slide outer C/V joint off end of interconnecting shaft, joint will have to be tapped off shaft using a **soft–faced** hammer.

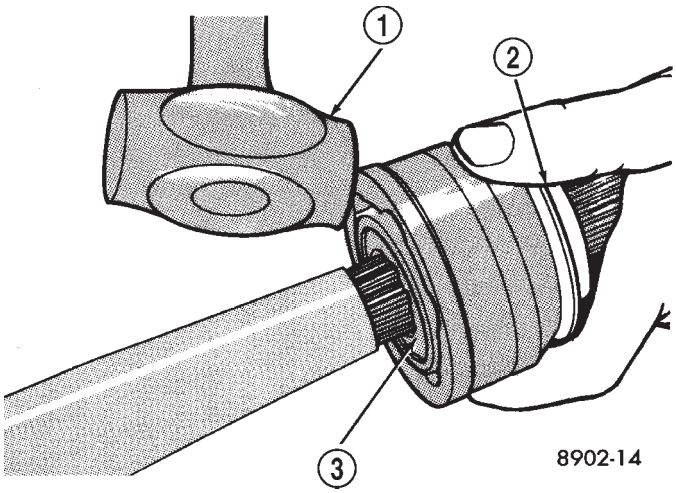

Fig. 37 Outer C/V Joint Removal from Interconnecting Shaft

1 – SOFT HAMMER (TAP HOUSING)
2 – WEAR SLEEVE
3 – CIRCLIP (OUTER END OF SHAFT)

(5) Slide failed sealing boot off interconnecting shaft.

(6) Thoroughly clean and inspect outer C/V joint assembly and interconnecting joint for any signs of excessive wear. **If any parts show signs of excessive wear, the driveshaft assembly will require replacement. Component parts of these driveshaft assemblies are not serviceable.**

INSTALLATION

(1) Slide new sealing boot and interconnecting shaft retaining clamp onto interconnecting shaft. Slide the outer C/V joint assembly sealing boot onto the interconnecting shaft (Fig. 38). **Seal boot MUST be positioned on interconnecting shaft so the raised bead on the inside of the seal boot is in groove on interconnecting shaft.**

(2) Align splines on interconnecting shaft with splines on cross of outer C/V joint assembly and start outer C/V joint onto interconnecting shaft.

DISASSEMBLY AND ASSEMBLY (Continued)

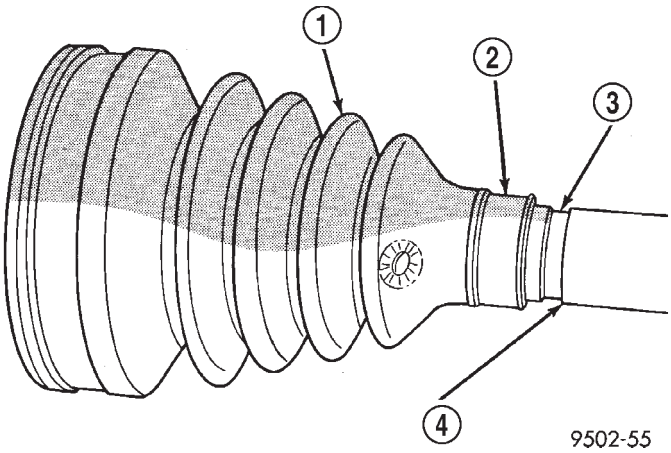

Fig. 38 Sealing Boot Installation on Interconnecting Shaft

1 – SEALING BOOT
2 – RAISED BEAD IN THIS AREA OF SEALING BOOT
3 – GROOVE
4 – INTERCONNECTING SHAFT

(3) Install outer C/V joint assembly onto interconnecting shaft by using a **soft–faced** hammer and tapping end of stub axle (with nut installed) until outer C/V joint is fully seated on interconnecting shaft (Fig. 39).

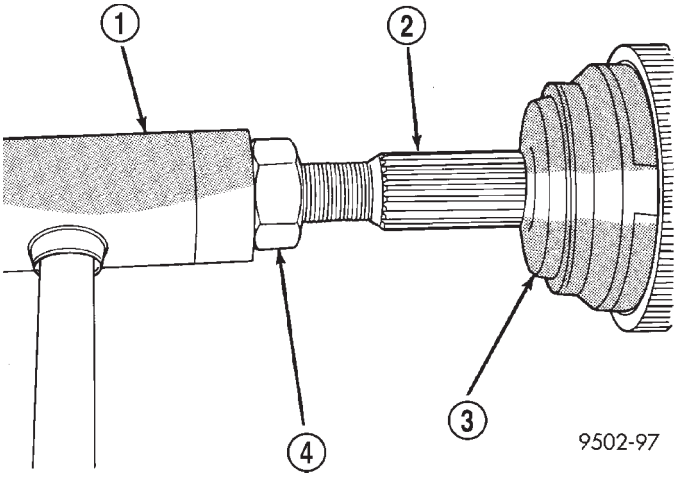

Fig. 39 Outer C/V Joint Installation on Interconnecting Shaft

1 – SOFT FACED HAMMER
2 – STUB AXLE
3 – OUTER C/V JOINT
4 – NUT

(4) Outer C/V joint assembly must be installed on interconnecting shaft (Fig. 40) until cross of outer C/V joint assembly is engaged to interconnecting shaft snap ring.

(5) Distribute 1/2 the amount of grease provided in seal boot service package (DO NOT USE ANY OTHER TYPE OF GREASE) into outer C/V joint assembly housing. Put the remaining amount into the sealing boot.

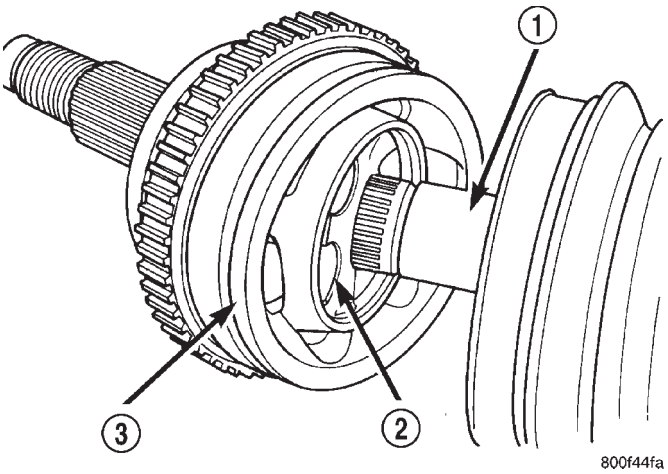

Fig. 40 Outer C/V Joint Correctly Installed on Interconnecting Shaft

1 – INTERCONNECTING SHAFT
2 – CROSS
3 – OUTER C/V JOINT ASSEMBLY

(6) Install outer C/V joint sealing boot to interconnecting shaft clamp evenly on sealing boot.

(7) Clamp sealing boot onto interconnecting shaft using crimper, Special Tool C-4975-A and the following procedure. Place crimping tool C-4975-A over bridge of clamp (Fig. 41). Tighten nut on crimping tool C-4975-A until jaws on tool are closed completely together, face to face (Fig. 42).

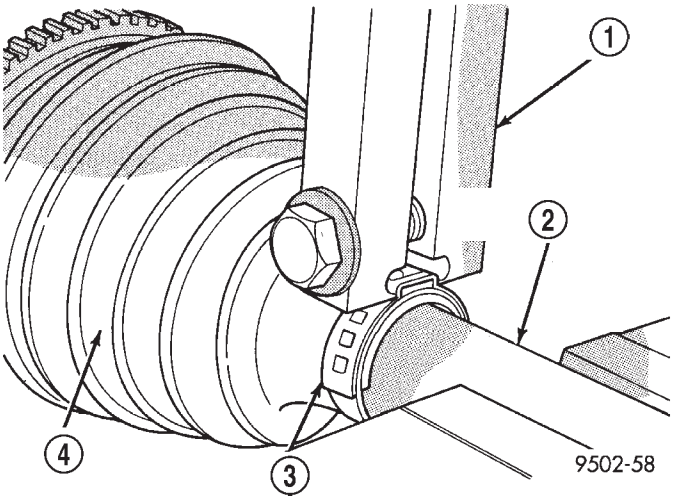

Fig. 41 Crimping Tool Installed on Sealing Boot Clamp

1 – SPECIAL TOOL C-4975A
2 – INTERCONNECTING SHAFT
3 – CLAMP
4 – SEALING BOOT

DISASSEMBLY AND ASSEMBLY (Continued)

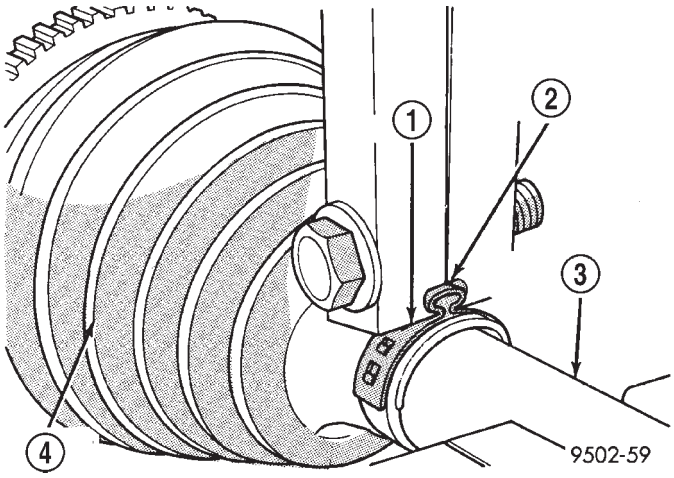

Fig. 42 Sealing Boot Retaining Clamp Installed

1 – CLAMP
2 – JAWS OF SPECIAL TOOL C-4975A MUST BE CLOSED COMPLETELY TOGETHER HERE
3 – INTERCONNECTING SHAFT
4 – SEALING BOOT

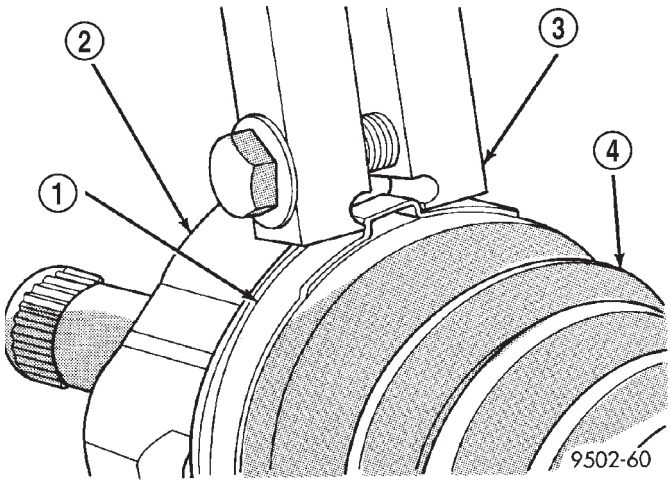

Fig. 43 Crimping Tool Installed on Sealing Boot Clamp

1 – CLAMP
2 – TRIPOD JOINT HOUSING
3 – SPECIAL TOOL C-4975A
4 – SEALING BOOT

CAUTION: Seal must not be dimpled, stretched, or out–of–shape in any way. If seal is NOT shaped correctly, equalize pressure in seal and shape it by hand.

(8) Position outer C/V joint sealing boot into its retaining groove on outer C/V joint housing. Install sealing boot to outer C/V joint retaining clamp evenly on sealing boot.

(9) Clamp sealing boot onto outer C/V joint housing using Crimper, Special Tool C-4975-A and the following procedure. Place crimping tool C-4975-A over bridge of clamp (Fig. 43). Tighten nut on crimping tool C-4975-A until jaws on tool are closed completely together, face to face (Fig. 44).

(10) Install the driveshaft requiring boot replacement back on the vehicle. See Driveshaft Removal and Installation for the required driveshaft installation procedure.

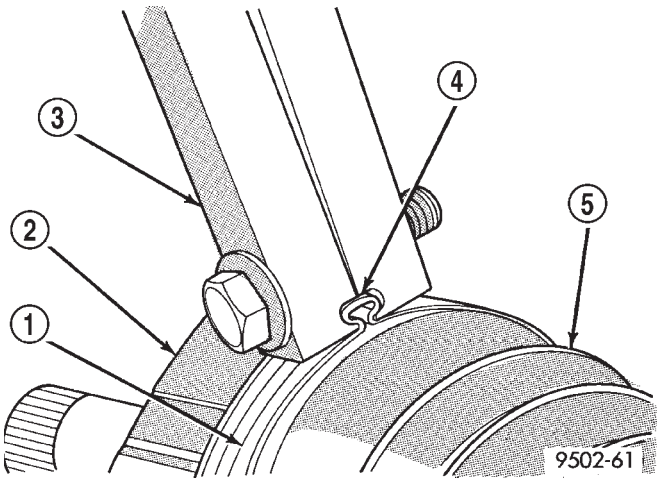

Fig. 44 Sealing Boot Retaining Clamp Installed

1 – CLAMP
2 – TRIPOD HOUSING
3 – SPECIAL TOOL C-4975A
4 – JAWS OF SPECIAL TOOL C-4975A MUST BE CLOSED COMPLETELY TOGETHER HERE
5 – SEALING BOOT

SPECIFICATIONS

TORQUE

DESCRIPTION	TORQUE
Driveshaft-to-Hub/Bearing	
Nut	244 N·m (180 ft. lbs.)
Knuckle-to-Ball Joint	
Bolt/Nut	95 N·m (70 ft. lbs.)
Wheel/Tire-to-Hub/Bearing	
Lug Nuts	136 N·m (100 ft. lbs.)

SPECIAL TOOLS

DRIVESHAFT

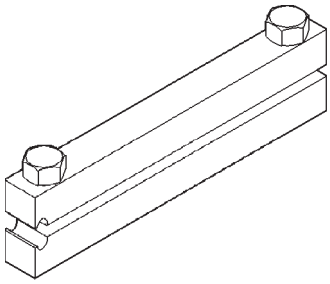

Boot Clamp Installer C-4975A

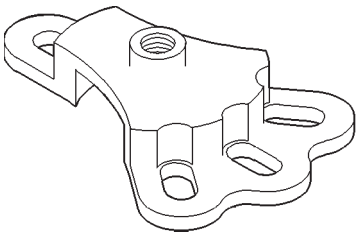

Puller 6790

BRAKES

TABLE OF CONTENTS

page

BASE BRAKE SYSTEM 1

ANTILOCK BRAKE SYSTEM 67

BASE BRAKE SYSTEM

TABLE OF CONTENTS

page

DESCRIPTION AND OPERATION
BASE BRAKE SYSTEM 2
BRAKE PEDAL 2
BRAKE LAMP SWITCH 2
POWER BRAKE BOOSTER 3
MASTER CYLINDER 4
BRAKE FLUID LEVEL SWITCH 4
PROPORTIONING VALVE 5
BRAKE TUBES AND HOSES 5
DISC BRAKES (FRONT) 5
DISC BRAKES (REAR). 7
DRUM BRAKES (REAR). 8
PARKING BRAKE. 9
RED BRAKE WARNING INDICATOR 10
DIAGNOSIS AND TESTING
BASE BRAKE SYSTEM DIAGNOSIS CHARTS . . . 11
BRAKE FLUID CONTAMINATION 13
BRAKE LAMP SWITCH 14
POWER BRAKE BOOSTER 14
PROPORTIONING VALVE 15
BRAKE ROTOR 17
BRAKE DRUM 19
DRUM BRAKE AUTOMATIC ADJUSTER. 19
SERVICE PROCEDURES
BRAKE FLUID LEVEL CHECKING 20
BASE BRAKE BLEEDING. 20
MASTER CYLINDER BLEEDING 21
BRAKE ROTOR MACHINING 22
BRAKE DRUM MACHINING 23
PARKING BRAKE AUTOMATIC ADJUSTER LOCKOUT. 23
REMOVAL AND INSTALLATION
SERVICE WARNINGS AND CAUTIONS 24
BRAKE PEDAL (WITH AUTOMATIC TRANSAXLE) 25
BRAKE PEDAL (WITH MANUAL TRANSAXLE) . . . 26
BRAKE LAMP SWITCH 28
MASTER CYLINDER 28

page

BRAKE FLUID RESERVOIR 30
BRAKE FLUID LEVEL SWITCH 30
POWER BRAKE BOOSTER 31
PROPORTIONING VALVE 32
BRAKES TUBES AND HOSES 33
DISC BRAKE CALIPER (FRONT) 33
DISC BRAKE CALIPER ADAPTER (FRONT). 34
DISC BRAKE CALIPER GUIDE PINS 35
DISC BRAKE SHOES (FRONT) 36
BRAKE ROTOR (FRONT). 37
DISC BRAKE CALIPER (REAR) 38
DISC BRAKE SHOES (REAR) 39
BRAKE ROTOR (REAR). 41
DRUM BRAKE WHEEL CYLINDER (REAR) 41
DRUM BRAKE SHOES (REAR) 43
BRAKE DRUM (REAR). 45
DRUM BRAKE SHOE SUPPORT PLATE (REAR) . . . 46
PARKING BRAKE LEVER. 48
PARKING BRAKE CABLE. 49
PARKING BRAKE SHOES (REAR DISC BRAKE) . . . 53
DISASSEMBLY AND ASSEMBLY
DISC BRAKE CALIPER (FRONT) 55
DISC BRAKE CALIPER (REAR) 57
CLEANING AND INSPECTION
BRAKE TUBES AND HOSES 62
DISC BRAKES (FRONT). 62
DISC BRAKES (REAR). 62
DRUM BRAKES (REAR). 63
ADJUSTMENTS
DRUM BRAKE SHOES. 63
PARKING BRAKE SHOES (REAR DISC BRAKES) . . 64
SPECIFICATIONS
BRAKE FLUID 65
BRAKE ACTUATION SYSTEM 65
BRAKE FASTENER TORQUE. 65
SPECIAL TOOLS
BASE BRAKE SYSTEM 66

DESCRIPTION AND OPERATION

BASE BRAKE SYSTEM

DESCRIPTION

The base brake system consists of the following components:

- Brake pedal
- Brake lamp switch
- Power brake booster
- Master cylinder
- Proportioning valves (2)
- Brake tubes and hoses
- Disc brakes (front)
- Disc brakes (rear)
- Drum brakes (rear)
- Parking brake

The hydraulic brake system is diagonally split on both the non-antilock and antilock braking systems. This means the left front and right rear brakes are on one hydraulic circuit and the right front and left rear are on the other.

Front disc brakes control the braking of the front wheels; rear braking is controlled by rear drum brakes as standard equipment. Rear disc brakes and an antilock brake system (ABS) with traction control are optional.

Vehicles equipped with the optional antilock brake system (ABS) use a system designated Mark 20e. This system shares most base brake hardware used on vehicles without ABS. A vehicle equipped with ABS, however, uses a different master cylinder and brake tubes. Also included in the ABS system is an integrated control unit (ICU) and four wheel speed sensors. These components are described in detail in the Antilock Brake System section. All vehicles with ABS come standard with four-wheel-disc brakes and traction control.

The parking brake system consists of a hand-operated lever mounted between the front seats, two parking brake cables and parking brake shoes at each rear wheel. Only vehicles with rear disc brakes receive separate parking brake shoes. Vehicles with rear drum brakes utilize the service brakes as the parking brake shoes.

OPERATION

When a vehicle needs to be stopped, the driver applies the brake pedal. The brake pedal pushes the input rod of the power brake booster into the booster. The booster uses vacuum to ease pedal effort as force is transferred through the booster to the master cylinder. The booster's output rod pushes in the master cylinder's primary and secondary pistons applying hydraulic pressure through the proportioning valves (rear only) and chassis brake tubes to the brakes at each tire and wheel assembly.

The parking brakes are hand-operated. When applied, the parking brake lever pulls on cables that actuate brake shoes at each rear wheel. The parking brake lever has an automatic-adjusting feature that takes up any excessive slack in the parking brake cable system.

BRAKE PEDAL

DESCRIPTION

A suspended-type brake pedal is used on this vehicle (Fig. 1). The pedal pivots on a shaft mounted in a pedal support bracket under the instrument panel on the driver's side of the vehicle. The pedal also connects to the power brake booster input rod.

The brake pedal bushings and it's pad are serviceable separately.

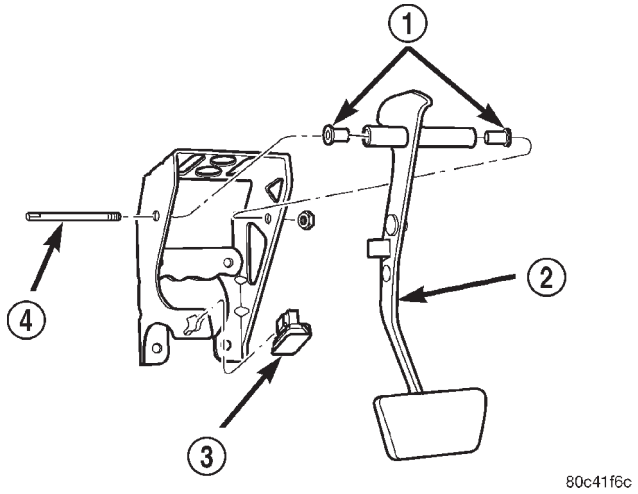

Fig. 1 Brake Pedal (Typical)

1 – BUSHINGS
2 – BRAKE PEDAL
3 – BRAKE LAMP SWITCH
4 – PIVOT SHAFT

OPERATION

As the brake pedal is depressed, it pushes in on the power brake booster input rod applying the brakes. At the same time, this motion allows the brake lamp switch's plunger to extend, opening or closing the three internal switches, one of them applying the brake lamps.

BRAKE LAMP SWITCH

DESCRIPTION

The brake lamp switch is located under the instrument panel, at the brake pedal arm (Fig. 2). It has three internal switches controlling various functions

DESCRIPTION AND OPERATION (Continued)

of the vehicle. It's main function is to control operation of the vehicle's brake lamps. Other functions include speed control deactivation, brake sense for the antilock brake system and brake sense for the brake transmission shift interlock.

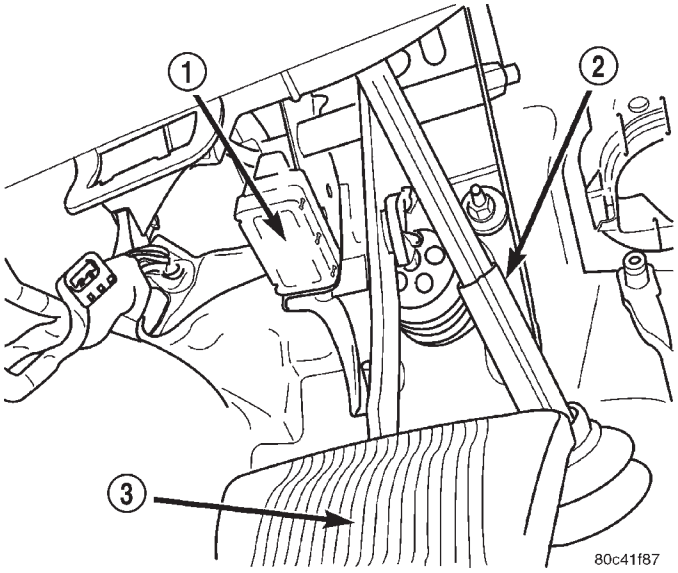

Fig. 2 Brake Lamp Switch

1 – BRAKE LAMP SWITCH
2 – STEERING COLUMN COUPLER
3 – BRAKE PEDAL

CAUTION: The switch can only be adjusted once. That is during initial installation of the switch. If the switch is not adjusted properly or has been removed for some service, a new switch must be installed and adjusted.

OPERATION

When the brake pedal is pressed, the plunger on the outside of the brake lamp switch extends outward. This action opens or closes the contacts of the three switches inside the brake lamp switch.

With the brake pedal is pressed down (plunger extended), the switch for terminals 1 and 2 is closed completing the circuit. The switch for terminals 3 and 4 is open and so is the switch for 5 and 6.

When the brake pedal is released (plunger pushed in), the three switches assume the opposite positions. The switch for terminals 1 and 2 is now open while the other two switches are now closed, completing their circuits.

POWER BRAKE BOOSTER

DESCRIPTION

The power brake booster is mounted to the engine side of the dash panel. The master cylinder is bolted to the front of the booster (Fig. 3). A vacuum check valve is also mounted on the front of the booster. A vacuum line connects the check valve to engine source vacuum. The booster input rod extends through the dash panel and connects to the brake pedal.

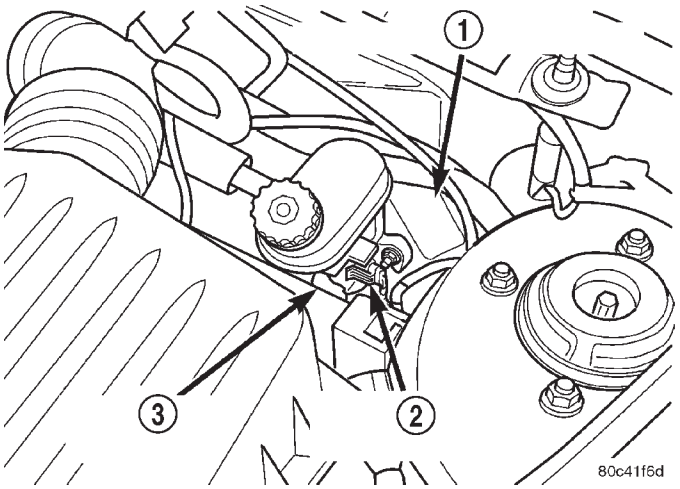

Fig. 3 Component Location In Vehicle

1 – POWER BRAKE BOOSTER
2 – BRAKE FLUID LEVEL SWITCH
3 – MASTER CYLINDER

There are two different power brake booster designs, although externally they appear the same. All vehicles use a 205 mm tandem diaphragm power brake booster. The two boosters are internally tuned differently depending on whether the vehicle is equipped with the standard front disc/rear drum brake combination or the optional front disc/rear disc (four-wheel-disc) brake combination. If the power brake booster requires replacement, be sure it is replaced with the correct part.

The power brake booster can be identified by the tag attached to the body of the booster assembly (Fig. 4). This tag contains the following information:

- The production part number
- The date it was built, and
- The booster manufacturer.

OPERATION

The purpose of the power brake booster is to reduce the amount of force required by the driver (foot-pedal pressure) to obtain the required hydraulic pressure in the brake system to stop the vehicle.

The power brake booster is vacuum operated. The vacuum is supplied from the intake manifold on the engine through the vacuum hose and power brake booster check valve (Fig. 4).

As the brake pedal is depressed, the power booster input rod moves forward. This opens and closes valves in the power brake booster, allowing atmo-

DESCRIPTION AND OPERATION (Continued)

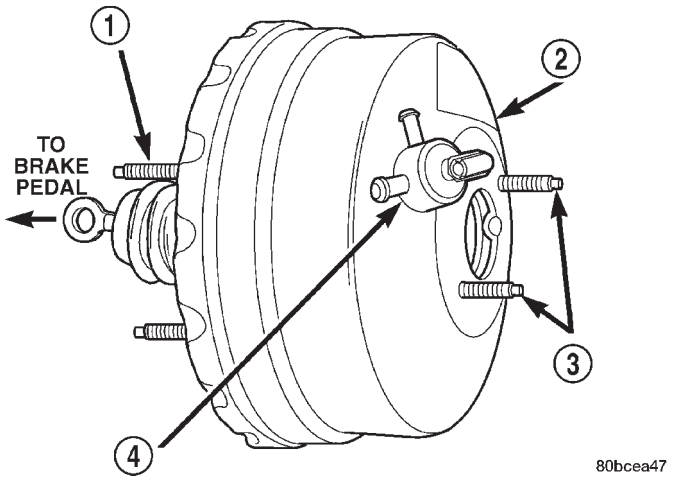

Fig. 4 Power Brake Booster

1 – MOUNTING STUD
2 – PARTS IDENTIFICATION TAG
3 – MASTER CYLINDER MOUNTING STUDS
4 – VACUUM CHECK VALVE

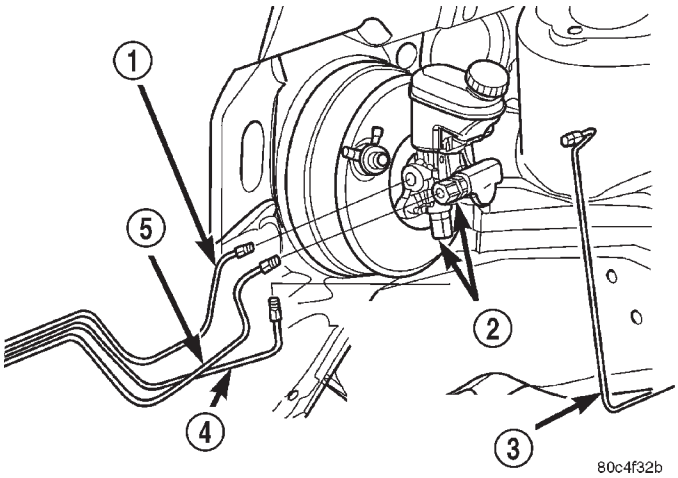

Fig. 5 Non-ABS Master Cylinder

1 – RIGHT FRONT BRAKE TUBE
2 – PROPORTIONING VALVES
3 – LEFT FRONT BRAKE TUBE
4 – LEFT REAR BRAKE TUBE
5 – RIGHT REAR BRAKE TUBE

spheric pressure to enter on one side of a diaphragm. Engine vacuum is always present on the other side. This difference in pressure forces the output rod of the power booster out against the primary piston of the master cylinder. As the pistons in the master cylinder move forward, hydraulic pressure is created in the brake system.

MASTER CYLINDER

DESCRIPTION

Two different master cylinders are offered on this vehicle. Vehicles without antilock brakes (ABS) use a standard compensating-port master cylinder, while vehicles equipped with ABS use a center-valve design master cylinder. All applications use a 23.82 mm (0.937 in.) bore diameter master cylinder. The information provided here applies only to the non-ABS master cylinder. For information on the master cylinder used on vehicles with ABS, refer to the Antilock Brake System section.

The non-ABS master cylinder is a four-outlet design with two screw-in proportioning valves. One is attached directly to the right side of the master cylinder housing while the other is attached to the bottom (Fig. 5).

The master cylinder body is an anodized aluminum casting. It has a machined bore to accept the master cylinder pistons and also has threaded ports with seats for hydraulic brake tube connections.

The master cylinder has the brake fluid reservoir mounted on top of it which gravity feeds brake fluid to the master cylinder when it is required. The reservoir is made of see-through plastic and it houses the brake fluid level switch. A removable brake fluid level switch is mounted in the left side. Refer to Brake Fluid Level Switch for additional information on the switch.

OPERATION

When the brake pedal is pressed, the master cylinder primary and secondary pistons apply brake pressure through the proportioning valves and chassis brake tubes to each brake assembly. The brake fluid reservoir supplies the brake hydraulic system with the necessary fluid to operate properly.

The master cylinder's primary outlet ports supply hydraulic pressure to the right front and left rear brakes while the secondary outlet ports supply hydraulic pressure to the left front and right rear brakes (Fig. 5).

The master cylinder reservoir cap diaphragm is slit to allow atmospheric pressure to equalize on both sides of the diaphragm.

BRAKE FLUID LEVEL SWITCH

DESCRIPTION

The brake fluid level switch is located in the left side of the brake fluid reservoir on the master cylinder (Fig. 6). It is clipped into the reservoir. It can be removed from the reservoir and replaced if necessary.

OPERATION

The purpose of the brake fluid level switch is to provide the driver with an early warning that the brake fluid level in the master cylinder reservoir has dropped below an acceptable level.

DESCRIPTION AND OPERATION (Continued)

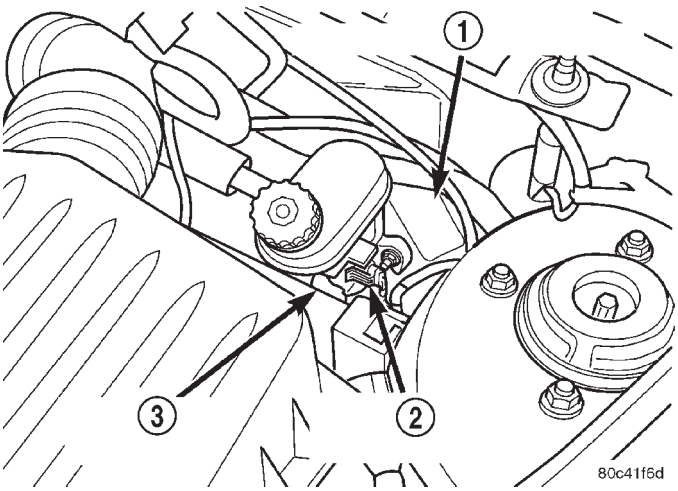

Fig. 6 Switch Location

1 – POWER BRAKE BOOSTER
2 – BRAKE FLUID LEVEL SWITCH
3 – MASTER CYLINDER

As the fluid drops below the designed level, the fluid level switch closes and grounds the red BRAKE warning indicator circuit. This turns on the red BRAKE warning indicator. At this time, the master cylinder brake fluid reservoir must be checked and filled to the full mark with DOT 3 brake fluid. Check the entire brake hydraulic system for evidence of a leak.

CAUTION: An abnormal loss of brake fluid in the master cylinder fluid reservoir could be caused by a leak in the hydraulic system. The entire brake hydraulic system should be checked for evidence of a leak.

PROPORTIONING VALVE

DESCRIPTION

NOTE: Only vehicles without antilock brakes have proportioning valves. Vehicles with antilock brakes have electronic brake distribution that is built into the integrated control unit.

On the non-antilock master cylinder, two screw-in proportioning valves are screwed directly into the rear brake outlet ports (Fig. 7). The chassis brake tubes leading to the rear brakes attach to the outlets of the proportioning valves. One proportioning valve controls each rear brake.

OPERATION

Proportioning valves balance front to rear braking by controlling the brake fluid hydraulic pressure to the rear brakes above a preset level (split point).

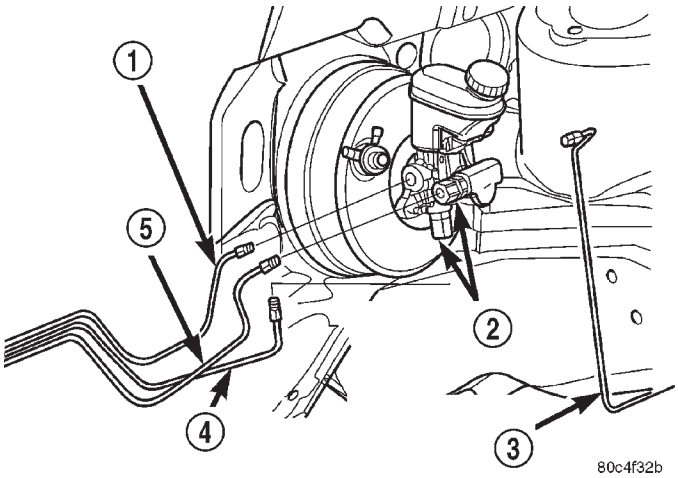

Fig. 7 Proportioning Valve Location

1 – RIGHT FRONT BRAKE TUBE
2 – PROPORTIONING VALVES
3 – LEFT FRONT BRAKE TUBE
4 – LEFT REAR BRAKE TUBE
5 – RIGHT REAR BRAKE TUBE

Under light pedal application, the proportioning valve allows normal fluid flow to the rear brakes. Under higher pedal effort, the valve reduces fluid pressure to the rear brakes. This helps prevent rear wheel skid tendencies.

BRAKE TUBES AND HOSES

DESCRIPTION

The brake tubes are steel with a corrosion-resistant nylon coating applied to the external surfaces. The flex hoses are made of reinforced rubber with fittings at each end.

OPERATION

The purpose of the brake tubes and flex hoses is to transfer brake fluid pressure, developed by the master cylinder to the brakes at each wheel of the vehicle. The flex hoses connect the chassis brake tubes which are mounted to the vehicle's underbody to the brake at each wheel, allowing for movement of the vehicle's suspension.

DISC BRAKES (FRONT)

DESCRIPTION

Each front disc brake assembly consists of the following components (Fig. 8):

- Caliper - single-piston, floating type
- Caliper adapter
- Shoe and lining assemblies
- Rotor

The caliper is a one-piece casting with the inboard side containing a single piston cylinder bore. The

DESCRIPTION AND OPERATION (Continued)

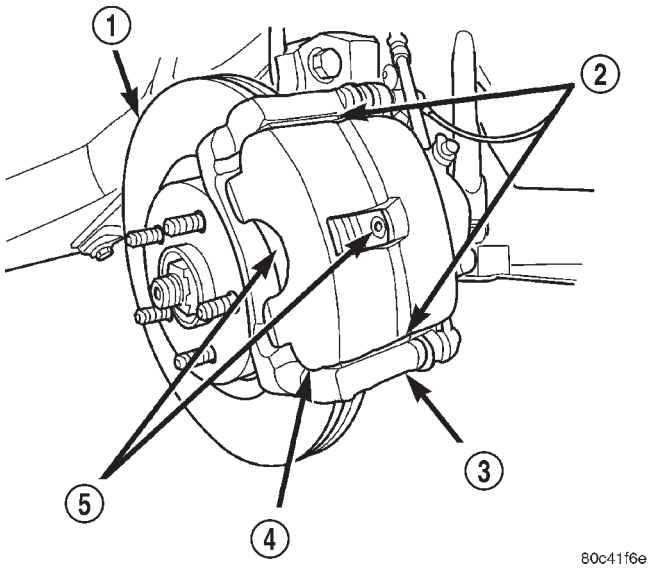

Fig. 8 Front Disc Brake

1 – BRAKE ROTOR
2 – ABUTMENT SHIMS
3 – DISC BRAKE ADAPTER
4 – CALIPER
5 – BRAKE SHOES

front disc brake caliper piston, is manufactured from a phenolic compound. The outside diameter of the caliper piston is 57 mm.

A square-cut rubber piston seal is located in a machined groove in the caliper cylinder bore. This seal provides a hydraulic seal between the piston and the cylinder wall (Fig. 9).

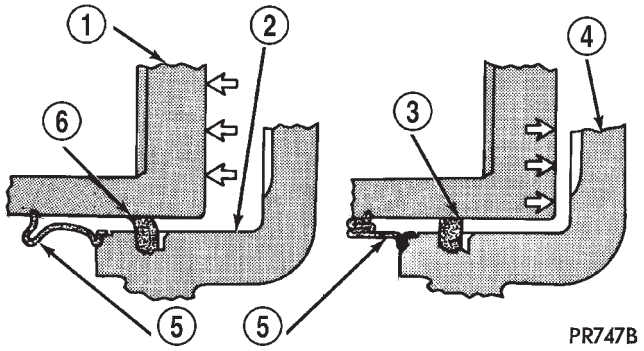

Fig. 9 Piston Seal Function

1 – PISTON
2 – CYLINDER BORE
3 – PISTON SEAL BRAKE PRESSURE OFF
4 – CALIPER HOUSING
5 – DUST BOOT
6 – PISTON SEAL BRAKE PRESSURE ON

A rubber dust boot is installed in a groove in cylinder bore opening and in a groove in the piston (Fig. 10). The boot prevents contamination in the bore area.

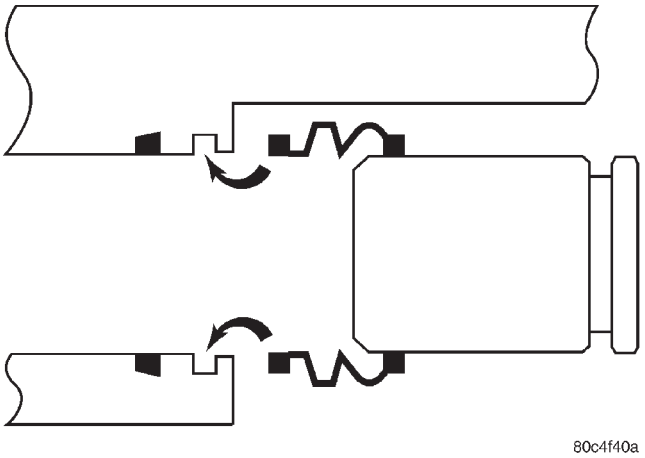

Fig. 10 Piston Boot Installation

The caliper is mounted to the caliper adapter using two guide pin bolts. These bolts thread into two guide pins, slid into the adapter (Fig. 11). The pins are lubricated and have boots to seal them in place in the adapter.

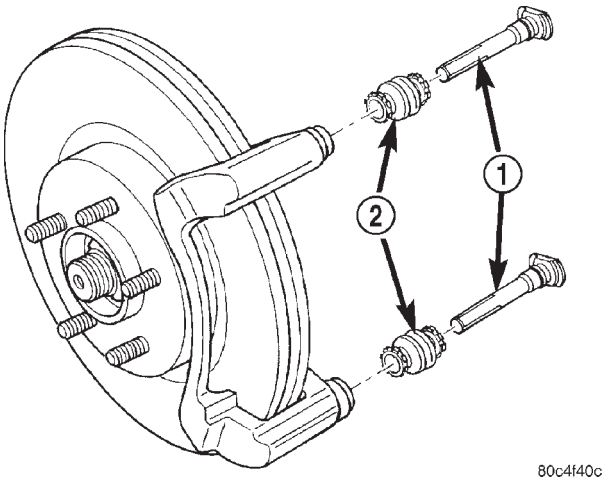

Fig. 11 Adapter, Boots and Pins

1 – PINS
2 – BOOTS

The disc brake caliper adapter is fastened to the steering knuckle using two bolts (Fig. 12).

The machined abutments on the adapter position the brake shoes and caliper. There are two brake shoes, sometimes referred to as pads, per disc brake. One shoe is placed on each side of the brake rotor (Fig. 13). Two abutment shims (upper and lower) ride between the shoes and adapter. The shoes have springs permanently attached to them to help maintain a distance between the shoes and the caliper. When brake shoes are replaced, only brake shoes meeting the original equipment manufacturer (OEM)

DESCRIPTION AND OPERATION (Continued)

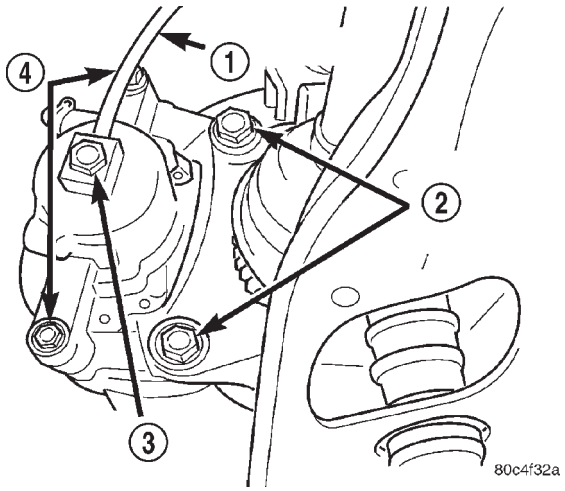

Fig. 12 Adapter Mounting

1 – BRAKE HOSE
2 – ADAPTER MOUNTING BOLTS
3 – BANJO BOLT
4 – CALIPER GUIDE PIN BOLTS

formulation (such as Mopar® replacement parts) should be used.

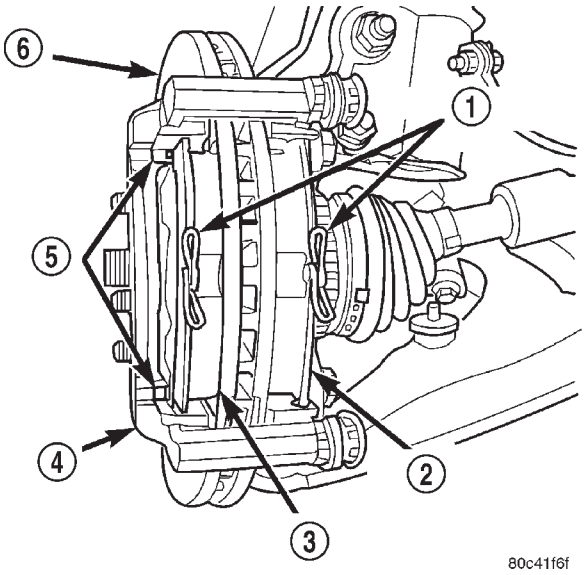

Fig. 13 Shoe Mounting To Adapter

1 – SPRINGS
2 – INBOARD SHOE
3 – OUTBOARD SHOE
4 – DISC BRAKE ADAPTER
5 – ABUTMENT SHIMS
6 – BRAKE ROTOR

Each front brake rotor is vented to help cool it during and after brake applications. It is mounted on the studs of the front wheel bearing hub.

OPERATION

When the brakes are applied, fluid pressure is sent to each brake caliper. The pressure at the caliper is exerted equally against the caliper piston. The pressure applied to the piston is transmitted directly to the inboard brake shoe. This forces the shoe lining against the inner surface of the brake rotor. At the same time, fluid pressure within the caliper piston bore forces the caliper to slide inward on its guide pins. This action brings the outboard shoe lining into contact with the outer surface of the brake rotor. This pressure on both sides of the brake rotor causes friction, bringing the vehicle to a stop.

When the brake pedal is released, so is the fluid pressure. The piston seal inside the caliper is designed to pull the piston back into the bore of the caliper when the brake pedal is released (Fig. 9). This action helps maintain the proper brake shoe-to-rotor clearance.

As front disc brake shoe linings wear, master cylinder reservoir brake fluid level will drop. Adjust as necessary. Fluid level should always be checked after replacing shoes.

Front disc brakes are equipped with audible wear indicators on the inboard brake shoes. This sensor emits a sound when the brake lining need inspection or replacement.

DISC BRAKES (REAR)

DESCRIPTION

Rear disc brakes are optional equipment on some models of this vehicle (Fig. 14). The rear disc brakes are similar to the front disc brakes; however, there are several distinctive features that require different service procedures. Each rear disc brake consists of the following components:

- Caliper - single-piston, floating type
- Caliper adapter
- Shoe and lining assemblies
- Rotor - drum-in-hat type

Vehicles are equipped with a one piece caliper assembly that has a 36 mm (1.42 in.) piston and uses a solid non-vented 270 mm (10.63 in.) brake rotor.

The caliper assembly for all applications floats on rubber bushings using internal metal sleeves that are attached to the adapter using threaded guide pin bolts.

The brake caliper adapter is mounted to the rear suspension spindle. The adapter is used to mount the disc brake caliper to the vehicle (Fig. 14). The adapter has two machined abutments which are used to position and align the caliper and brake shoes for movement inboard and outboard.

When brake shoes, sometimes referred to as pads, are replaced, only brake shoes meeting the original

DESCRIPTION AND OPERATION (Continued)

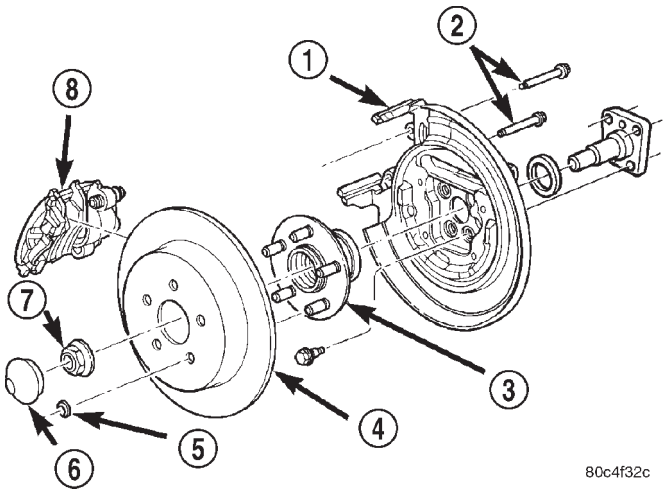

Fig. 14 Rear Disc Brakes

1 – DISC BRAKE ADAPTER
2 – GUIDE PIN BOLTS
3 – HUB AND BEARING
4 – BRAKE ROTOR
5 – RETAINER CLIP
6 – DUST CAP
7 – NUT
8 – DISC BRAKE CALIPER

equipment manufacturer (OEM) formulation (such as Mopar® replacement parts) should be used.

The adapter also mounts the parking brake shoes and actuating cables to the vehicle. All vehicles equipped with rear disc brakes have a small duo-servo drum brake mounted to the caliper adapter. This is part of the parking brake system. Refer to Parking Brake for additional information.

OPERATION

When the brakes are applied, fluid pressure is sent to each brake caliper. The pressure at the caliper is exerted equally against the caliper piston. The pressure applied to the piston is transmitted directly to the inboard brake shoe. This forces the shoe lining against the inner surface of the brake rotor. At the same time, fluid pressure within the caliper piston bore forces the caliper to slide inward on its guide pins. This action brings the outboard shoe lining into contact with the outer surface of the brake rotor. This pressure on both sides of the brake rotor causes friction, bringing the vehicle to a stop.

When the brake pedal is released, so is the fluid pressure. The piston seal inside the caliper is designed to pull the piston back into the bore of the caliper when the brake pedal is released (Fig. 9). This action helps maintain the proper brake shoe-to-rotor clearance.

As disc brake shoe linings wear, master cylinder reservoir brake fluid level will drop. Adjust as necessary. Fluid level should always be checked after replacing shoes.

DRUM BRAKES (REAR)

DESCRIPTION

Rear drum brakes are standard equipment on this vehicle. The rear drum brakes consist of the major components listed in the figure (Fig. 15). Other components related to the brake shoes themselves can be seen in the next figure (Fig. 16).

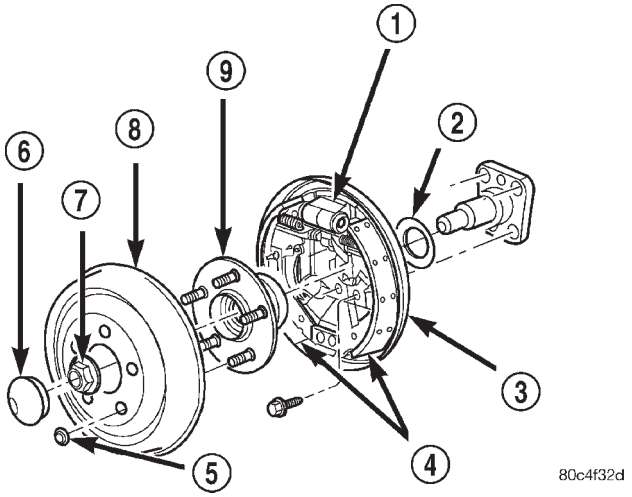

Fig. 15 Rear Drum Brakes

1 – WHEEL CYLINDER
2 – SEAL
3 – SUPPORT PLATE
4 – BRAKE SHOES
5 – RETAINER CLIP
6 – DUST CAP
7 – NUT
8 – DRUM
9 – HUB AND BEARING

The rear wheel drum brakes are a two-shoe, internal-expanding type with an automatic adjuster screw (Fig. 16). The automatic adjuster screw is actuated each time the brakes are applied. The automatic adjuster screw is located directly below the rear brake wheel cylinder.

OPERATION

When the brakes are applied, fluid pressure is sent to each rear drum brake wheel cylinder. The pressure at the wheel cylinder is exerted equally against both cylinder pistons. The piston pressure is transmitted directly to the top of each brake shoe. This forces the shoes out against the inner surface of the brake drum. This causes friction, bringing the vehicle to a stop.

DESCRIPTION AND OPERATION (Continued)

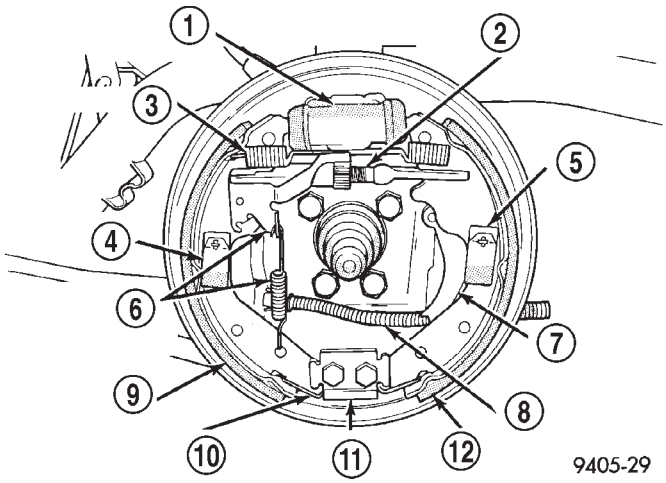

Fig. 16 Drum Brake Shoes (Left Side Shown)

1 – WHEEL CYLINDER
2 – AUTOMATIC ADJUSTER SCREW ASSEMBLY
3 – RETURN SPRING
4 – HOLD DOWN CLIP
5 – HOLD DOWN CLIP
6 – AUTOMATIC ADJUSTER LEVER AND SPRING
7 – PARK BRAKE LEVER
8 – PARK BRAKE CABLE
9 – FRONT BRAKE SHOE
10 – BRAKESHOE TO ANCHOR SPRING
11 – BRAKE ANCHOR PLATE
12 – REAR BRAKE SHOE

When the brake pedal is released, so is the fluid pressure. The return springs attached to the shoes return the shoes to the released position.

Vehicles with rear drum brakes use the drum brakes as part of the parking brake system also. Refer to Parking Brake for additional information.

PARKING BRAKE

DESCRIPTION

The parking brakes consist of the following components:

- Hand-operated park brake lever - automatic-adjusting
- Parking brake cables (2)
- Actuation levers and struts
- Duo-servo parking brake assembly (rear disc only)

All vehicles are equipped with a center-mounted, hand-operated parking brake lever mounted between the front seats (Fig. 17). This lever is an automatic-adjusting type that continuously applies minimal tension to the parking brake cables to keep them in adjustment at all times.

The parking brake lever has a short output cable with an equalizer bracket attached to it that connects to the parking brake cables (Fig. 17). The output

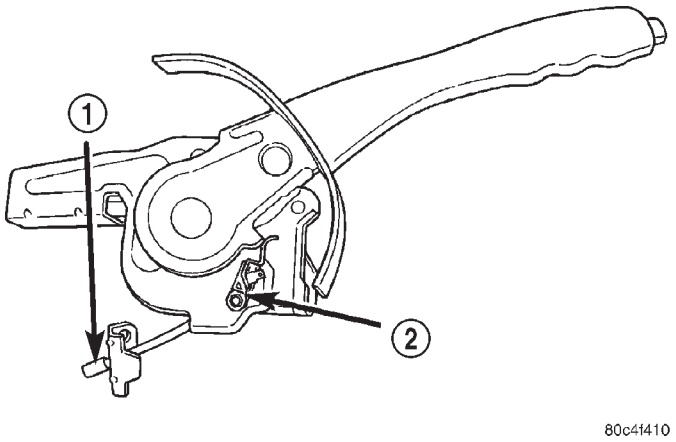

Fig. 17 Parking Brake Lever

1 – OUTPUT CABLE
2 – SWITCH

cable can only be serviced as part of the parking brake lever.

There is an individual parking brake cable for each rear wheel that joins a parking brake cable equalizer, attached to the parking brake lever, to the rear parking brakes. The parking brake cables are made of flexible steel cable. Both drum rear brakes and disc rear brakes use the same parking brake cable configuration, but the cables are different.

On vehicles equipped with rear drum brakes, the rear wheel service brakes also act as the vehicle's parking brakes. The rear drum brake shoes, when acting as parking brakes, are mechanically operated using an internal actuating lever and strut connected to the flexible steel parking brake cable.

The parking brakes on vehicles equipped with rear disc brakes consist of a small duo-servo brake assembly mounted to the disc brake caliper adapter (Fig. 18). The hat (center) section of the rear brake rotor serves as the braking surface (drum) for the parking brakes (Fig. 19). This parking brake application uses the same operating cable configuration as the drum brake equipped vehicles, but different cables.

OPERATION

When the parking brake is applied, the equalizer bracket on the lever output cable pulls on both parking brake cables, thus applying the brake shoes (rear drum brakes) or parking brake shoes (rear disc brakes).

The brake shoes are mechanically operated by an internal lever and strut connected to the parking brake cables.

The parking brake lever automatic-adjusting feature continuously applies minimal tension to the parking brake cables to keep them in adjustment at all times. Therefore, the parking brake cable system does not require adjustment. Proper parking brake

DESCRIPTION AND OPERATION (Continued)

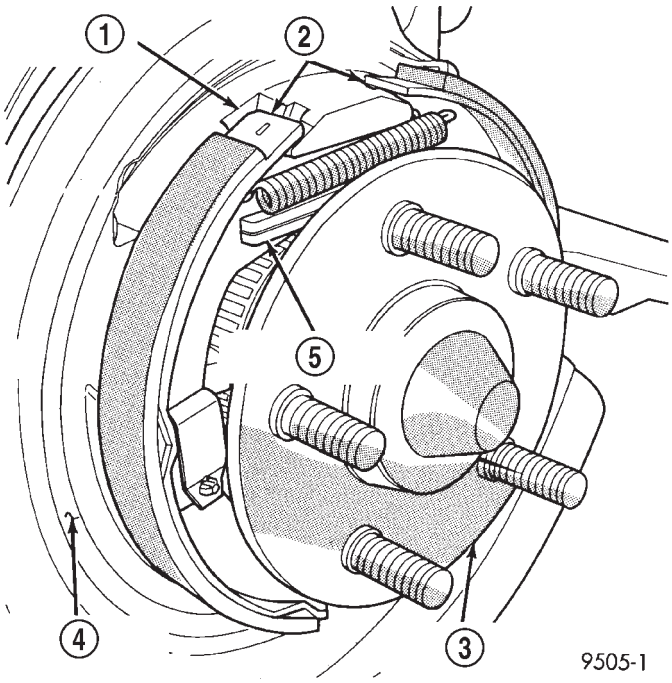

Fig. 18 Parking Brake Assembly With Rear Disc Brakes

1 – DISC BRAKE ADAPTER
2 – PARKING BRAKE BRAKE SHOES
3 – HUB/BEARING ASSEMBLY
4 – BRAKING DISC STONE SHIELD
5 – PARKING BRAKE ACTUATING STRUT

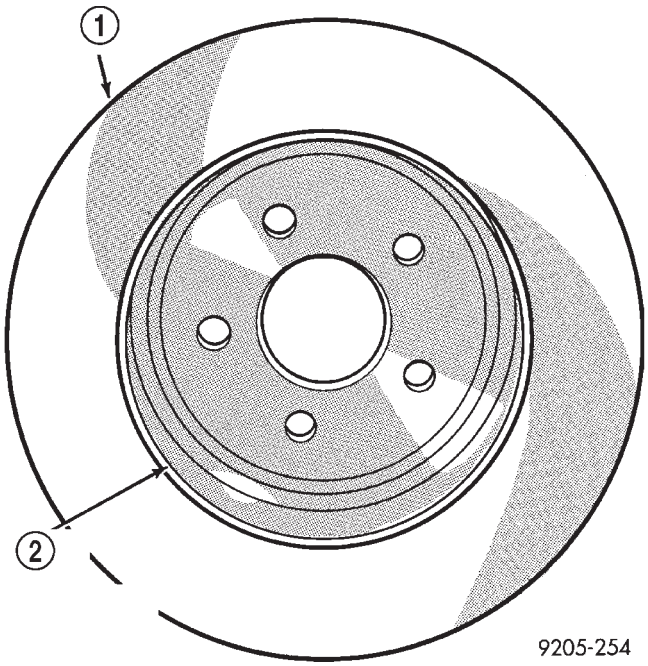

Fig. 19 Drum-In-Hat Brake Rotor

1 – REAR BRAKING DISK ROTOR
2 – HAT SECTION OF REAR BRAKING DISC (PARKING BRAKE BRAKING SURFACE)

system adjustment is obtained by proper drum brake or drum-in-hat brake shoe adjustment. When service is needed, the lever auto-adjust mechanism must be reloaded and locked out before service can be performed.

RED BRAKE WARNING INDICATOR

DESCRIPTION

The red BRAKE warning indicator is located in the instrument panel cluster. The indicator illuminates the word BRAKE in the color red.

OPERATION

The red BRAKE warning indicator LED is supplied with current anytime the ignition switch is ON. The LED is illuminated by completing the ground circuit (with ignition switch ON) using any of the following components:

- the brake fluid level switch located in the master cylinder reservoir
- the parking brake switch mounted on the parking brake lever
- the ignition switch when the ignition switch is first moved to the ON or CRANK position
- the mechanical instrument cluster (MIC) (with ABS)
- the ABS electronic brake distribution (EBD)

In addition, the red BRAKE warning indicator illuminates when the ignition switch is moved from the OFF to the ON or CRANK position. This is done to check the LED's operation.

The red BRAKE warning indicator can be turned on by the MIC in the case where the ABS is experiencing a problem where the amber ABS warning indicator needs to be illuminated and cannot. The MIC will then illuminate the red BRAKE warning indicator.

DIAGNOSIS AND TESTING

BASE BRAKE SYSTEM DIAGNOSIS CHARTS

NOTE: There are three diagnosis charts following that cover the RED BRAKE WARNING INDICATOR, BRAKE NOISE and OTHER BRAKE CONDITIONS.

RED BRAKE WARNING INDICATOR

CONDITION	POSSIBLE CAUSES	CORRECTION
RED BRAKE WARNING INDICATOR ON	1. Parking brake lever not fully released.	1. Release parking brake lever.
	2. Parking brake warning switch on parking brake lever.	2. Inspect and replace switch as necessary.
	3. Brake fluid level low in reservoir.	3. Fill reservoir. Check entire system for leaks. Repair or replace as required.
	4. Brake fluid level switch.	4. Disconnect switch wiring connector. If lamp goes out, replace switch.
	5. Mechanical instrument cluster (MIC) problem.	5. Refer to Chassis Diagnostic Procedures.
	6. ABS EBD malfunction.	6. Refer to ABS section and Chassis Diagnostic Procedures.

BRAKE NOISE

CONDITION	POSSIBLE CAUSES	CORRECTION
DISC BRAKE CHIRP	1. Excessive brake rotor runout.	1. Follow brake rotor diagnosis and testing. Correct as necessary.
	2. Lack of lubricant on brake caliper slides/guide pins.	2. Lubricate brake caliper slides/guide pins.
DISC BRAKE RATTLE OR CLUNK	1. Broken or missing spring clips on shoes.	1. Replace brake shoes.
	2. Caliper guide pin bolts loose.	2. Tighten guide pin bolts.
	3. Missing abutment shims.	3. Replace missing abutment shims.
DISC BRAKE SQUEAK AT LOW SPEED (WHILE APPLYING LIGHT BRAKE PEDAL EFFORT)	1. Brake shoe linings.	1. Replace brake shoes.
DRUM BRAKE CHIRP	1. Lack of lubricant on brake shoe support plate where shoes ride.	1. Lubricate shoe contact areas on brake shoe support plates.
	2. Wheel cylinder out of alignment.	2. Loosen wheel cylinder mounting bolts, realign wheel cylinder with brake shoes and tighten mounting bolts.
DRUM BRAKE CLUNK	1. Drum(s) have threaded machined braking surface.	1. Reface or replace drake drums as necessary.
DRUM BRAKE HOWL OR MOAN	1. Lack of lubricant on brake shoe support plate where shoes ride and at the anchor.	1. Lubricate shoe contact areas on brake shoe support plates and at the anchor.

DIAGNOSIS AND TESTING (Continued)

CONDITION	POSSIBLE CAUSES	CORRECTION
	2. Rear brake shoes.	2. Replace rear brake shoes.
SCRAPING (METAL-TO-METAL).	1. Foreign object interference with brakes. 2. Brake shoes worn out.	1. Inspect brakes and remove foreign object. 2. Replace brake shoes. Inspect rotors and drums. Reface or replace as necessary.

OTHER BRAKE CONDITIONS

CONDITION	POSSIBLE CAUSES	CORRECTION
BRAKES CHATTER	1. Rear brake drum out of round or disc brake rotor has excessive thickness variation.	1. Isolate condition as rear or front. Reface or replace brake drums or rotors as necessary.
BRAKES DRAG (FRONT OR ALL)	1. Contaminated brake fluid. 2. Binding caliper pins or bushings. 3. Misadjusted brake lamp switch. 4. Binding master cylinder. 5. Binding brake pedal.	1. Check for swollen seals. Replace all system components containing rubber. 2. Replace pins and bushings 3. Replace brake lamp switch. 4. Replace master cylinder. 5. Replace brake pedal.
BRAKES DRAG (REAR ONLY)	1. Parking brake cables binding or froze up. 2. Parking brake cable return spring not returning shoes. 3. Service brakes not adjusted properly (rear drum brakes only). 4. Obstruction inside the center console preventing full return of the parking brake cables.	1. Check cable routing. Replace cables as necessary. 2. Replace cables as necessary. 3. Follow the procedure listed in the adjustment section. 4. Remove console and remove obstruction.
BRAKES GRAB	1. Contaminated brake shoe linings. 2. Improper power brake booster assist.	1. Inspect and clean, or replace shoes. Repair source of contamination. 2. Refer to Power Brake Booster in this section.
EXCESSIVE PEDAL EFFORT	1. Obstruction of brake pedal. 2. Low power brake booster assist. 3. Glazed brake linings. 4. Brake shoe lining transfer to brake rotor.	1. Inspect, remove or move obstruction. 2. Refer to Power Brake Booster in this section. 3. Reface or replace brake rotors as necessary. Replace brake shoes. 4. Reface or replace brake rotors as necessary. Replace brake shoes.
EXCESSIVE PEDAL TRAVEL (VEHICLE STOPS OK)	1. Air in brake lines. 2. Rear drum brake auto-adjuster malfunctioning.	1. Bleed brakes. 2. Inspect and replace drum brake components as necessary. Adjust rear brakes.

DIAGNOSIS AND TESTING (Continued)

CONDITION	POSSIBLE CAUSES	CORRECTION
EXCESSIVE PEDAL TRAVEL (PEDAL GOES TO FLOOR - CAN'T SKID WHEELS)	1. Power brake booster runout (vacuum assist).	1. Check booster vacuum hose and engine tune for adequate vacuum supply. Refer to Power Brake Booster in this section.
EXCESSIVE PEDAL TRAVEL (ONE FRONT WHEEL LOCKS UP DURING HARD BRAKING)	1. One of the two hydraulic circuits to the front brakes is malfunctioning.	1. Inspect system for leaks. Check master cylinder for internal malfunction.
PEDAL PULSATES/ SURGES DURING BRAKING	1. Rear brake drum out of round or disc brake rotor has excessive thickness variation.	1. Isolate condition as rear or front. Reface or replace brake drums or rotors as necessary.
PEDAL IS SPONGY	1. Air in brake lines.	1. Bleed brakes.
PREMATURE REAR WHEEL LOCKUP	1. Contaminated brake shoe linings. 2. Inoperative proportioning valve (non-ABS vehicles only). 3. ABS EBD not functioning.	1. Inspect and clean, or replace shoes. Repair source of contamination. 2. Test proportioning valves following procedure listed elsewhere in this section. Replace valves as necessary. 3. Refer to the ABS section and Chassis Diagnostic Procedures.
STOP LAMPS STAY ON	1. Brake lamp switch out of adjustment. 2. Brake pedal binding. 3. Obstruction in pedal linkage. 4. Power Brake Booster not allowing pedal to return completely.	1. Replace brake lamp switch. 2. Inspect and replace as necessary. 3. Remove obstruction. 4. Replace power brake booster.
VEHICLE PULLS TO RIGHT OR LEFT ON BRAKING	1. Frozen brake caliper piston. 2. Contaminated brake shoe lining. 3. Pinched brake lines. 4. Leaking piston seal. 5. Suspension problem.	1. Replace frozen piston or caliper. Bleed brakes. 2. Inspect and clean, or replace shoes. Repair source of contamination. 3. Replace pinched line. 4. Replace piston seal or brake caliper. 5. Refer to the Suspension section.
PARKING BRAKE - EXCESSIVE HANDLE TRAVEL	1. Rear brakes out of adjustment.	1. Adjust rear drum brake shoes, or rear parking brake shoes on vehicles with rear disc brakes.

BRAKE FLUID CONTAMINATION

Indications of fluid contamination are swollen or deteriorated rubber parts. Swelling indicates the presence of petroleum in the brake fluid.

To test for contamination, put a small amount of drained brake fluid in clear glass jar. If the fluid separates into layers, there is mineral oil or other fluid contamination of the brake fluid.

If the brake fluid is contaminated, drain and thoroughly flush the brake system. Replace all the rubber parts or components containing rubber coming into contact with the brake fluid including: the master cylinder; proportioning valves; caliper seals; wheel cylinder seals; ABS hydraulic control unit; and all hydraulic fluid hoses.

DIAGNOSIS AND TESTING (Continued)

BRAKE LAMP SWITCH

NOTE: Before proceeding with this diagnostic test, verify the adjustment of the brake lamp switch to rule out misadjustment. If misadjusted, replace the switch. It cannot be readjusted.

If the electrical circuit has been tested and the brake lamp switch is suspected of being faulty, it can be tested using the following method.

(1) Remove the switch from the vehicle. Refer to Removal And Installation in this section.

(2) With the switch in the released position (plunger extended), use an ohmmeter to test each of the three internal switches as shown (Fig. 20). You should achieve the results as listed in the figure.

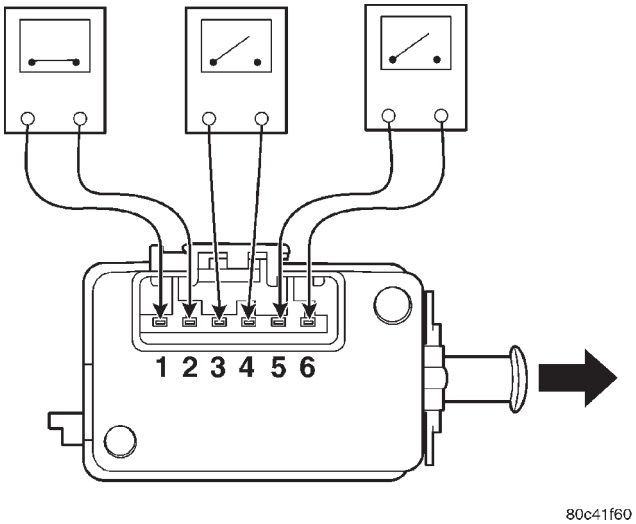

Fig. 20 Switch Test - Released Position

(3) Gently push the plunger on the brake lamp switch in until it stops.

(4) With the switch in this depressed position (plunger pushed in), use an ohmmeter to test each of the three internal switches as shown (Fig. 21). You should achieve the results as listed in the figure.

If you do not achieve the results as listed in both figures, the switch is faulty and must be replaced. Refer to Removal And Installation in this section.

If the switch is found to be operating properly, do not reinstall it, replace the switch. Refer to Removal And Installation in this section.

CAUTION: The switch can only be adjusted once. That is during initial installation of the switch. If the switch is not adjusted properly or has been removed for some service, a new switch must be installed and adjusted.

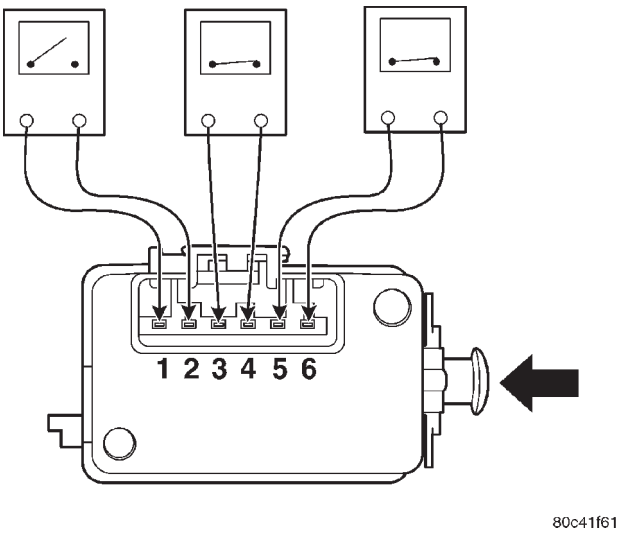

Fig. 21 Switch Test - Depressed Position

POWER BRAKE BOOSTER

BASIC TEST

(1) With engine off, depress and release the brake pedal several times to purge all vacuum from the power brake booster.

(2) Depress and hold the pedal with light effort (15 to 25 lbs. pressure), then start the engine.

The pedal should fall slightly, then hold. Less effort should be needed to apply the pedal at this time. If the pedal fell as indicated, perform the VACUUM LEAK TEST listed after the BASIC TEST. If the pedal did not fall, continue on with this BASIC TEST.

(3) Disconnect the vacuum hose on the side of the vacuum check valve that leads to the speed control, then connect a vacuum gauge to the open vacuum port on the valve.

(4) Start the engine.

(5) When the engine is at warm operating temperature, allow it to idle and check the vacuum at the gauge.

If the vacuum supply is 12 inches Hg (40.5 kPa) or more, the power brake booster is defective and must be replaced. If the vacuum supply is below 12 inches, continue on with this BASIC TEST.

(6) Shut off the engine.

(7) Connect the vacuum gauge to the vacuum reference port on the engine intake manifold.

(8) Start the engine and observe the vacuum gauge.

If the vacuum is still low, check the engine tune and repair as necessary. If the vacuum is above 12 inches, the hose or check to the booster has a restriction or leak.

Once an adequate vacuum supply is obtained, repeat the BASIC TEST.

DIAGNOSIS AND TESTING (Continued)

VACUUM LEAK TEST

(1) Disconnect the vacuum hose on the side of the power brake booster vacuum check valve that leads to the speed control, then connect a vacuum gauge to the open vacuum port on the valve.

(2) Remove the remaining hose on the vacuum check valve that is not the vacuum supply hose coming from the intake manifold. Cap off the open port on the check valve.

(3) Start the engine.

(4) Allow the engine to warm up to normal operating temperature and engine idle.

(5) Using vacuum line pliers, close off the vacuum supply hose near the booster and observe the vacuum gauge.

If the vacuum drop exceeds 1.0 inch Hg (3.3 kPa) in one minute, repeat the above steps to confirm the reading. The vacuum loss should be less than 1.0 inch Hg in one minute time span. If the loss is more than 1.0 inch Hg, replace the power brake booster. If it is not, continue on with this test.

(6) Remove the pliers from the hose temporarily.

(7) Apply light effort (approximately 15 lbs. of force) to the brake pedal and hold the pedal steady. Do not move the pedal once the pressure is applied or the test results may vary.

(8) Have an assistant reattach the pliers to the vacuum supply hose.

(9) Allow 5 seconds for stabilization, then observe the vacuum gauge.

If the vacuum drop exceeds 3.0 inches Hg (10 kPa) in 15 seconds, repeat the above steps to confirm the reading. The vacuum loss should be less than 3.0 inches Hg in 15 seconds time span. If the loss is more than 3.0 inches Hg, replace the power brake booster. If it is not, the booster is not defective.

PROPORTIONING VALVE

NOTE: Only vehicles without antilock brakes have proportioning valves. Vehicles with antilock brakes have electronic brake distribution which is built into the integrated control unit.

If premature rear wheel skid occurs on a hard brake application, it could be an indication that a malfunction has occurred with one of the proportioning valves.

One proportioning valve controls the right rear brake and the other proportioning valve controls the left rear brake (Fig. 22). Therefore, a road test to determine which rear brake skids first is essential.

Before testing the proportioning valve in question, inspect the rear brake linings for contamination or for replacement shoes not meeting the OEM brake lining material specifications.

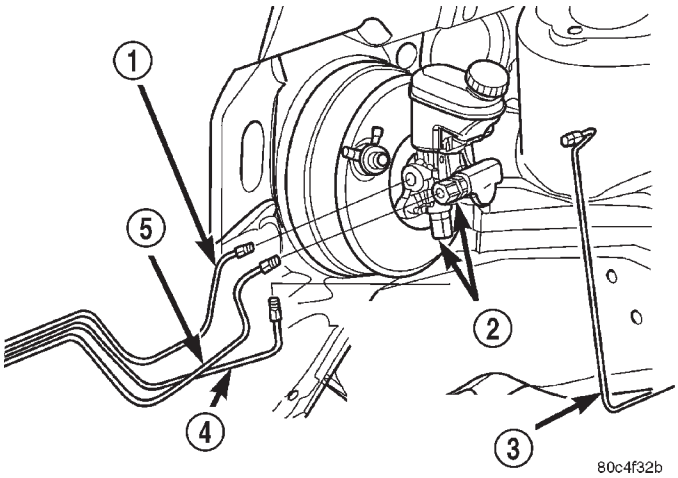

Fig. 22 Proportioning Valve Location

1 – RIGHT FRONT BRAKE TUBE
2 – PROPORTIONING VALVES
3 – LEFT FRONT BRAKE TUBE
4 – LEFT REAR BRAKE TUBE
5 – RIGHT REAR BRAKE TUBE

The proportioning valve should always be tested prior to being replaced.

The in-line proportioning valves used on this vehicle require special pressure fittings to test the proportioning valves for proper proportioning valve function. The pressure fittings are installed before and after the proportioning valve being tested to verify proportioning valve is maintaining the required hydraulic pressure to the rear wheel brake which it controls.

PROPORTIONING VALVE TEST

The test procedure is the same for either rear proportioning valve. After road testing the vehicle to determine which wheel skids first, follow the procedure below for testing the suspect proportioning valve.

(1) Using a brake pedal holding tool as shown (Fig. 23), depress the brake pedal past its first one inch of travel and hold it in this position. This will isolate the master cylinder from the brake hydraulic system and will not allow the brake fluid to drain out of the master cylinder reservoir.

(2) Use the figure shown to determine which proportioning valve needs to be tested (Fig. 22).

(3) Remove the hydraulic brake tube from the proportioning valve controlling the rear wheel of the vehicle that has premature wheel skid.

(4) Remove the proportioning valve from its outlet port on the master cylinder.

CAUTION: Be sure the pressure test fittings being installed into master cylinder and proportioning valve, have the correct thread sizes needed.

DIAGNOSIS AND TESTING (Continued)

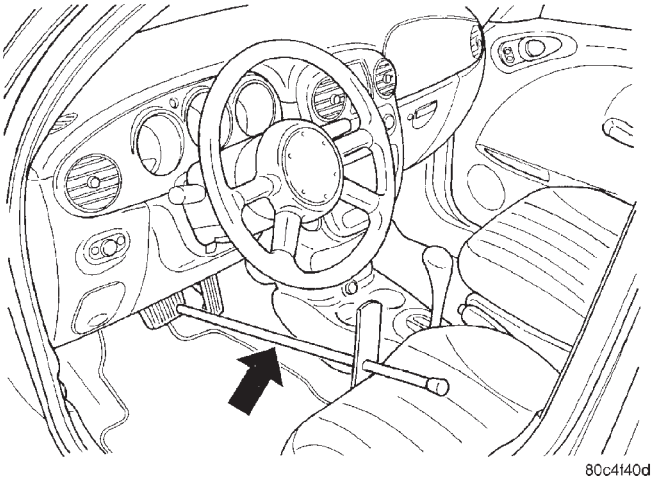

Fig. 23 Brake Pedal Holding Tool

(5) Install the Brake Pressure Adapters, Special Tool 8644 and 8187-2 onto the proportioning valve (Fig. 24).

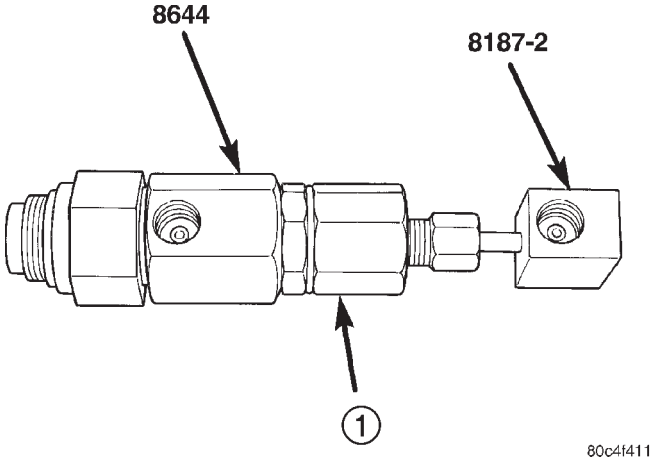

Fig. 24 Tools On Valve

1 – PROPORTIONING VALVE

(6) Install the proportioning valve (with tools) back into the outlet port on the master cylinder.

(7) Attach a Pressure Gauge, Special Tool C-4007-A, to each pressure adapter (Fig. 25).

(8) Remove the brake pedal holding tool. Bleed any air out of the pressure gauge hoses at the pressure gauge.

(9) With the aid of a helper, apply pressure to the brake pedal until the reading on proportioning valve inlet gauge is at the target inlet pressure shown in the Brake Proportioning Valve Applications And Pressure Specifications table following this procedure. If the inlet gauge pressure overshoots its target pressure when the pedal is depressed, release the brake pedal, relieving the pressure in the system, before reapplying the pedal to reach the target pressure at the inlet gauge. This is necessary to get an accurate reading of the outlet pressure.

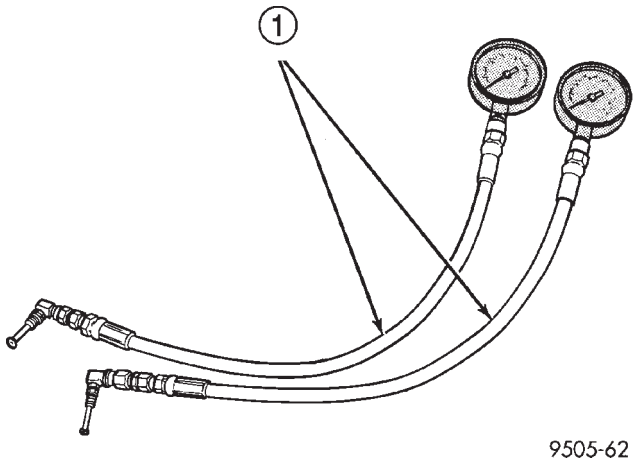

Fig. 25 Pressure Gauge Set

1 – SPECIAL TOOL C-4007–A

(10) Once inlet pressure has been achieved, check the pressure reading on the proportioning valve outlet gauge. If the proportioning valve outlet pressure does not agree with value shown in the table, replace the proportioning valve. If proportioning valve is within pressure specifications, the valve is good and does not require replacement.

(11) Reinstall the brake holding tool on the brake pedal and remove the test equipment from the vehicle.

(12) Remove the tools from the proportioning valve.

(13) Install the proportioning valve in the master cylinder and hand tighten until the proportioning valve is fully installed and its O-ring seal is seated into the master cylinder. Tighten the proportioning valve to a torque of 40 N·m (30 ft. lbs.).

(14) Install the brake tube on the proportioning valve. Tighten the tube nut to a torque of 17 N·m (145 in. lbs.).

(15) Bleed the affected brake line. See Base Brake Bleeding in this section.

BRAKE PROPORTIONING VALVE APPLICATIONS AND PRESSURE SPECIFICATIONS

Sales Code	Brake System Type	Split Point	Slope	Identification	Inlet Pressure	Outlet Pressure
BRB	15” Disc/Drum	400 psi	0.34	Black Band	1000 psi	600-700 psi

DIAGNOSIS AND TESTING (Continued)

BRAKE ROTOR

Any servicing of the rotor requires extreme care to maintain the rotor within service tolerances to ensure proper brake action.

Excessive runout or wobble in a rotor can increase pedal travel due to piston knock-back. This increases guide pin sleeve wear due to the tendency of the caliper to follow the rotor wobble.

When diagnosing a brake noise or pulsation, the machined disc braking surface should be checked and inspected.

BRAKING SURFACE INSPECTION

Light braking surface scoring and wear is acceptable. If heavy scoring or warping is evident, the rotor must be refaced or replaced. Refer to SERVICE PROCEDURES in this section of this group for information on brake rotor machining.

Excessive wear and scoring of the rotor can cause improper lining contact on the rotor's braking surface. If the ridges on the rotor are not removed before new brake shoes are installed, improper wear of the shoes will result.

If a vehicle has not been driven for a period of time, the rotor's braking surface will rust in the areas not covered by the brake shoes at that time. Once the vehicle is driven, noise and chatter from the disc brakes can result when the brakes are applied until the rust wears away.

Some discoloration or wear of the rotor surface is normal and does not require resurfacing when linings are replaced. If cracks or burned spots are evident, the rotor must be replaced.

ROTOR MINIMUM THICKNESS

Measure rotor thickness at the center of the brake shoe contact surface. Replace the rotor if it is worn below minimum thickness or if machining the rotor will cause its thickness to fall below specifications.

CAUTION: Do not machine the rotor if it will cause the rotor to fall below minimum thickness.

Minimum thickness specifications are cast on the rotor's unmachined surface (Fig. 26). Limits can also be found in the table at the end of this brake rotor information.

ROTOR THICKNESS VARIATION

Thickness variation in a rotor's braking surface can result in pedal pulsation, chatter and surge. This can also be caused by excessive runout in the rotor or the hub.

Rotor thickness variation measurements should be made in conjunction with measuring runout. Measure thickness of the brake rotor at 12 equal points around the rotor braking surface with a micrometer at a radius approximately 25 mm (1 inch) from edge of rotor (Fig. 27). If thickness measurements vary beyond the specification listed in the Brake Rotor Limits Table at the end of this procedure, the rotor should be refaced or replaced. Refer to SERVICE PROCEDURES in this section of this group for information on brake rotor machining.

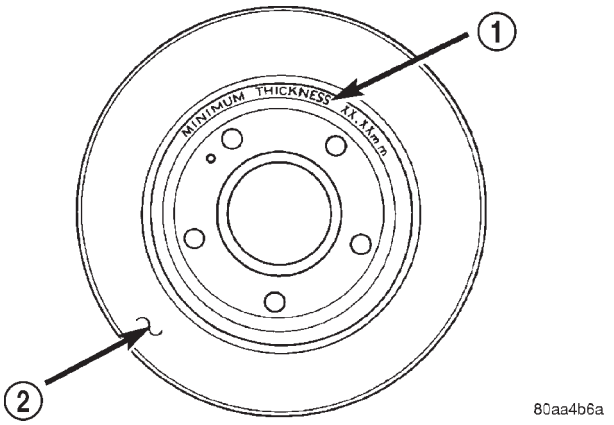

Fig. 26 Minimum Brake Rotor Thickness Markings (Typical)

1 – ROTOR MINIMUM THICKNESS MARKING
2 – ROTOR

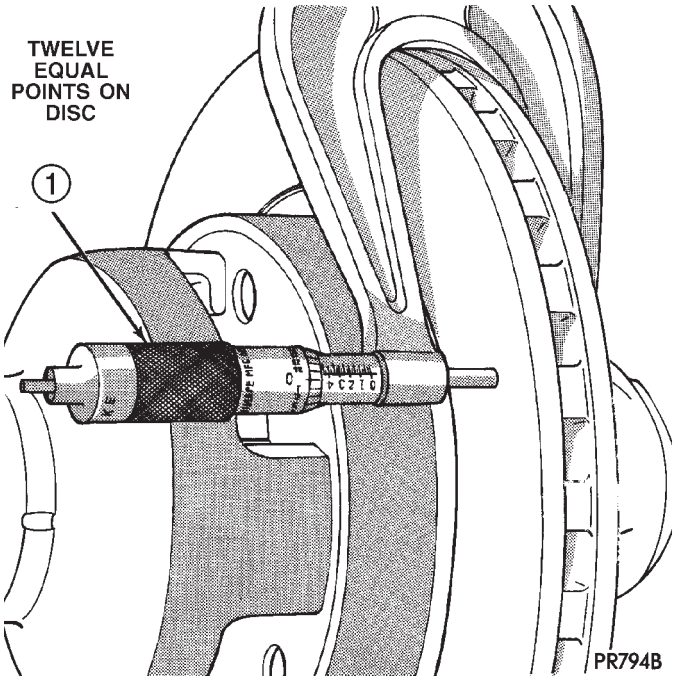

Fig. 27 Checking Rotor Thickness

1 – CALIPER

ROTOR RUNOUT

On-vehicle rotor runout is the combination of the individual runout of the hub face and the runout of

DIAGNOSIS AND TESTING (Continued)

the rotor. (The hub and rotor runouts are separable). To measure rotor runout on the vehicle, first remove the tire and wheel assembly. Reinstall the wheel mounting nuts on the studs, tightening the rotor to the hub. Mount the Dial Indicator, Special Tool C-3339, with Mounting Adaptor, Special Tool SP-1910 on steering arm. The dial indicator plunger should contact braking surface of rotor approximately 25 mm (1 inch) from edge of rotor (Fig. 28). Check lateral runout on both sides of the rotor, marking the low and high spots on both. Runout limits can be found in the table at the end of this brake rotor information.

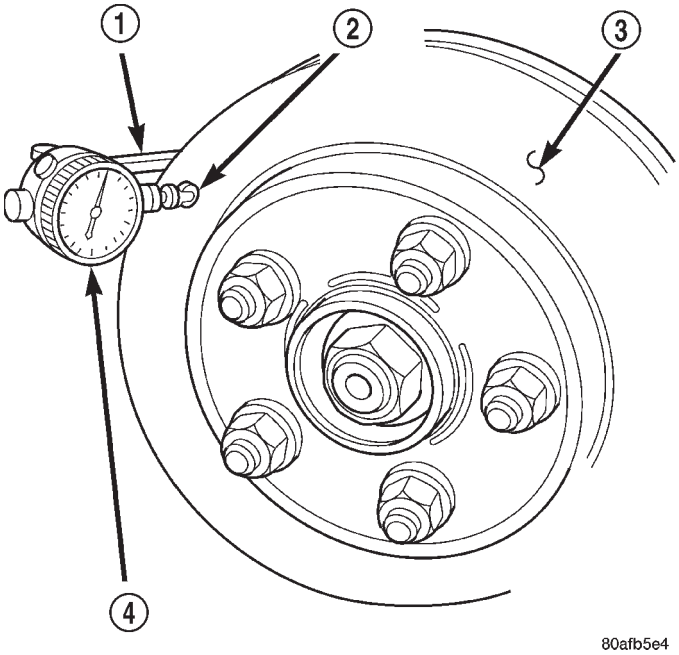

Fig. 28 Checking Rotor Runout

1 – SPECIAL TOOL SP-1910
2 – 25mm FROM EDGE
3 – DISC SURFACE
4 – SPECIAL TOOL C-3339

If runout is in excess of the specification, check the lateral runout of the hub face. Before removing the rotor from the hub, place a chalk mark across both the rotor and the one wheel stud closest to where the high runout measurement was taken. This way, the original mounting spot of the rotor on the hub is indexed (Fig. 29).

Remove the rotor from the hub.

NOTE: Clean the hub face surface before checking runout. This provides a clean surface to get an accurate indicator reading.

Mount Dial Indicator, Special Tool C-3339, and Mounting Adaptor, Special Tool SP-1910, to the steering knuckle. Position the indicator stem so it contacts

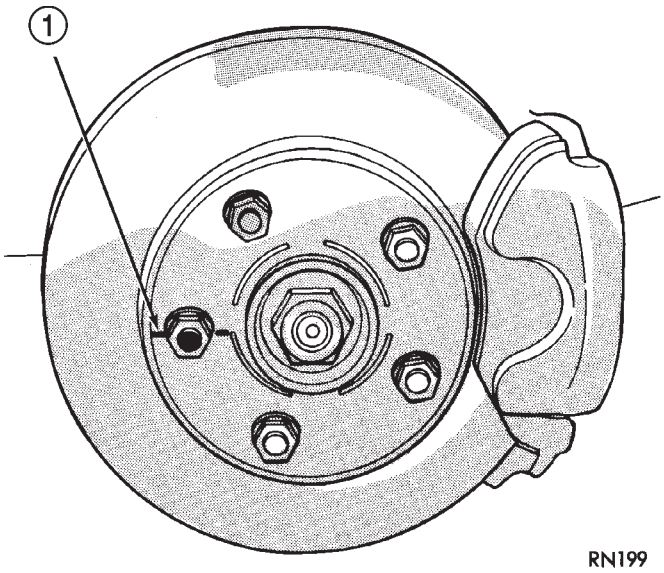

Fig. 29 Marking Rotor and Wheel Stud

1 – CHALK MARK

the hub face near the outer diameter. Care must be taken to position stem outside of the stud circle, but inside of the chamfer on the hub rim (Fig. 30).

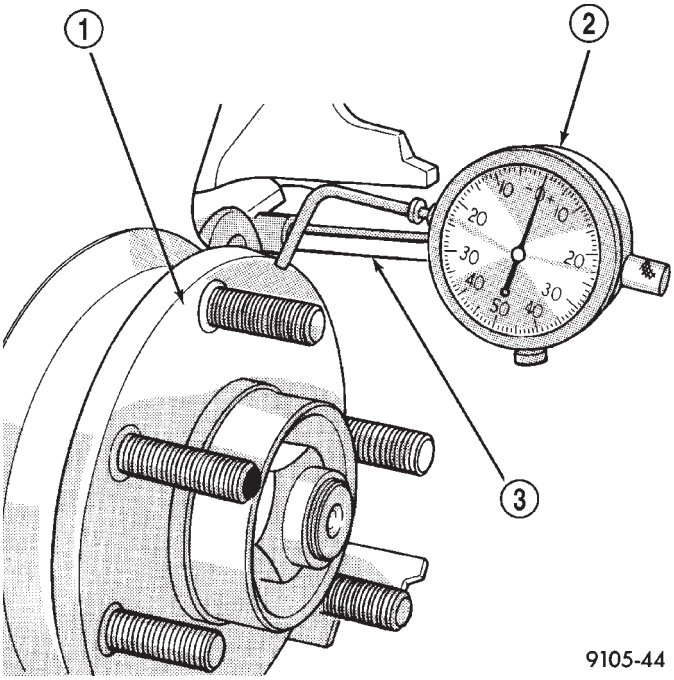

Fig. 30 Checking Hub Runout

1 – HUB SURFACE
2 – SPECIAL TOOL C-3339
3 – SPECIAL TOOL SP-1910

Hub runout should not exceed 0.08 mm (0.003 inch). If runout exceeds this specification, the hub must be replaced. Refer to the SUSPENSION group in this service manual for the replacement procedure.

DIAGNOSIS AND TESTING (Continued)

If the hub runout does not exceed this specification, install the rotor back on the hub, aligning the chalk marks on the rotor with a wheel mounting stud, two studs apart from the original stud (Fig. 31). Tighten nuts in the proper sequence and torque to specifications.

Recheck brake rotor runout to see if the runout is now within specifications.

If runout is not within specifications, reface or replace the brake rotor. Refer to SERVICE PROCEDURES in this section of this group for information on brake rotor machining.

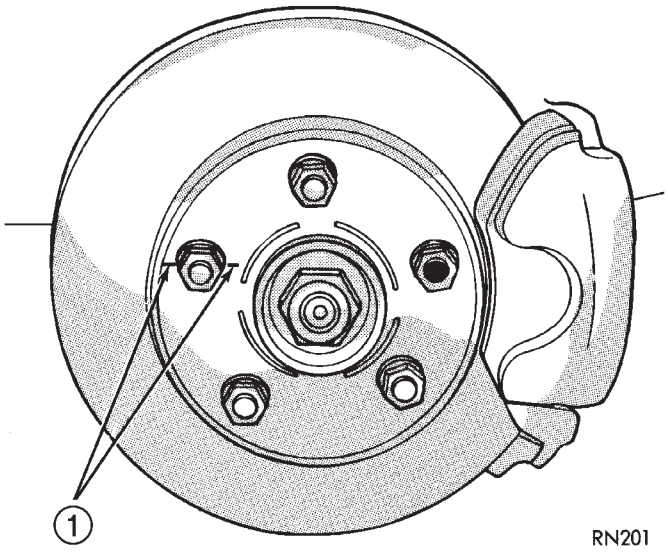

Fig. 31 Index Rotor And Wheel Stud

1 – CHALK MARK

BRAKE ROTOR LIMITS

Braking Rotor	Rotor Thickness	Minimum Rotor Thickness	Rotor Thickness Variation	Rotor Runout*
Front Rotor	22.91–23.10 mm 0.902–0.909 in.	21.40 mm 0.843 in.	0.010 mm 0.0004 in.	0.13 mm 0.005 in.
Rear Rotor	8.75–9.25 mm 0.344–0.364 in.	7.25 mm 0.285 in.	0.013 mm 0.0005 in.	0.13 mm 0.005 in.
* TIR Total Indicator Reading (Measured On Vehicle)				

BRAKE DRUM

With the drum off the vehicle, measure the drum for diameter variation (oval shape). The diameter variation of the drum braking surface must not exceed either 0.0635 mm (0.0025 inch) in 30° or 0.0889 mm (0.0035 inch) in 360°.

Measure brake drum runout. Brake drum runout should be checked with the drum mounted on a brake lathe. Brake drum runout should not exceed 0.1524 mm (0.006 inch).

If either of these measurements are not within specification, reface or replace the drum. Refer to BRAKE DRUM MACHINING in the SERVICE PROCEDURES section of this service manual group for refacing procedures.

Always replace the drum if machining will cause the diameter to exceed drum maximum diameter. All brake drums are marked with the maximum allowable brake drum diameter (Fig. 32).

DRUM BRAKE AUTOMATIC ADJUSTER

To properly test the drum brake automatic adjuster, the aide of a helper inside the vehicle to apply the brakes will be necessary.

(1) Raise the vehicle. Refer to HOISTING in the LUBRICATION AND MAINTENANCE group for the proper lifting procedure.

(2) Remove the access plug from the rear adjustment slot in each brake support plate.

(3) Insert a thin screwdriver in the adjustment slot and push back the adjustment lever. With the lever in this position, back the star wheel adjustment off approximately 10 notches. This will eliminate the possibility that the brake is at full adjustment, and can be adjusted no further.

(4) Remove the screwdriver from the adjustment slot.

(5) Watch the star wheel through the adjustment slot, while a helper applies the brake pedal. As the

DIAGNOSIS AND TESTING (Continued)

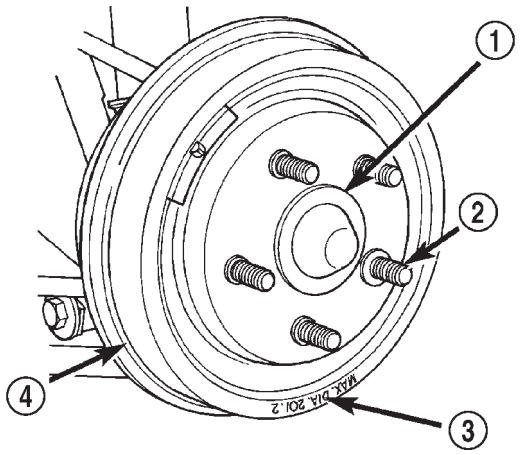

Fig. 32 Maximum Diameter Identification (Typical)

1 – HUB/BEARING ASSEMBLY
2 – WHEEL MOUNTING STUDS
3 – BRAKE DRUM MAXIMUM DIAMETER MARKING
4 – REAR BRAKE DRUM

brake shoes apply, the adjustment lever should move downward, turning the star wheel. A definite rotation of the adjuster star wheel can be observed if the automatic adjuster is working properly.

If the star wheel does not move as indicated, the brake drum needs to be removed and further inspection of the rear brakes is necessary.

(6) If the star wheel is operating properly, readjust the brakes. Refer to ADJUSTMENTS in this section of this service manual group.

(7) Reinstall the adjustment slot access plug.

(8) Lower the vehicle.

SERVICE PROCEDURES

BRAKE FLUID LEVEL CHECKING

Brake fluid level should be checked a minimum of twice a year.

Master cylinder reservoirs are marked, FULL and MIN, indicating the allowable brake fluid level range in the master cylinder brake fluid reservoir.

CAUTION: Use only Mopar® brake fluid or an equivalent from a tightly sealed container. Brake fluid must conform to DOT 3 specifications. Do not use petroleum-based fluid because seal damage in the brake system will result.

Although there is a range, the preferred level is FULL. If necessary, adjust the brake fluid level to the FULL mark listed on the side of the master cylinder brake fluid reservoir.

BASE BRAKE BLEEDING

NOTE: For bleeding the ABS hydraulic system, refer to Antilock Brake System Bleeding in the Antilock Brake System section.

CAUTION: Before removing the master cylinder cap, wipe it clean to prevent dirt and other foreign matter from dropping into the master cylinder reservoir.

CAUTION: Use only Mopar® brake fluid or an equivalent from a fresh, tightly sealed container. Brake fluid must conform to DOT 3 specifications.

Do not pump the brake pedal at any time while having a bleeder screw open during the bleeding process. This will only increase the amount of air in the system and make additional bleeding necessary.

Do not allow the master cylinder reservoir to run out of brake fluid while bleeding the system. An empty reservoir will allow additional air into the brake system. Check the fluid level frequently and add fluid as needed.

The following wheel circuit sequence for bleeding the brake hydraulic system should be used to ensure adequate removal of all trapped air from the hydraulic system.

- Left rear wheel
- Right front wheel
- Right rear wheel
- Left front wheel

MANUAL BLEEDING

NOTE: To bleed the brakes manually, the aid of a helper will be required.

(1) Attach a clear plastic hose to the bleeder screw and feed the hose into a clear jar containing enough fresh brake fluid to submerge the end of the hose (Fig. 33).

(2) Have a helper pump the brake pedal three or four times and hold it in the down position.

(3) With the pedal in the down position, open the bleeder screw at least 1 full turn.

(4) Once the brake pedal has dropped, close the bleeder screw. After the bleeder screw is closed, release the brake pedal.

(5) Repeat the above steps until all trapped air is removed from that wheel circuit (usually four or five times).

(6) Bleed the remaining wheel circuits in the same manner until all air is removed from the brake sys-

SERVICE PROCEDURES (Continued)

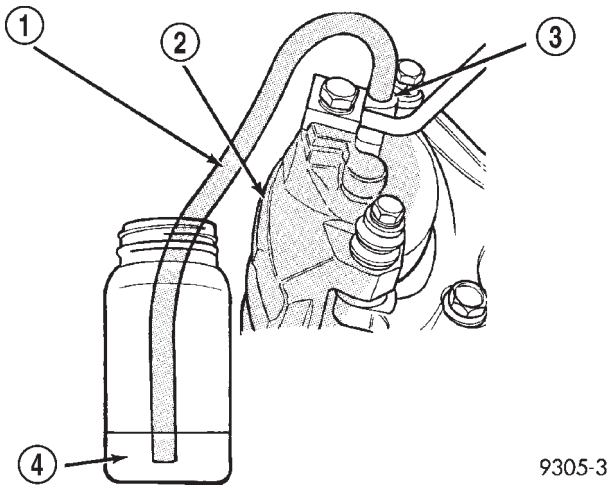

Fig. 33 Proper Method for Purging Air From Brake System (Typical)

1 – CLEAR HOSE
2 – BRAKE CALIPER
3 – BLEEDER SCREW
4 – CLEAN BRAKE FLUID

tem. Monitor the fluid level in the master cylinder reservoir to make sure it does not go dry.

(7) Check the brake pedal travel. If pedal travel is excessive or has not been improved, some air may still be trapped in the system. Rebleed the brakes as necessary.

(8) Test drive the vehicle to verify the brakes are operating properly and pedal feel is correct.

PRESSURE BLEEDING

NOTE: Follow pressure bleeder manufacturer's instructions for use of pressure bleeding equipment.

Following the same wheel circuit sequence as prescribed for manual bleeding.

(1) Attach Adapter, Special Tool 6921, to the master cylinder reservoir (Fig. 34).

(2) Attach Bleeder Tank, Special Tool C-3496-B, or an equivalent, to the adapter on the master cylinder.

(3) Attach a clear plastic hose to the bleeder screw and feed the hose into a clear jar containing enough fresh brake fluid to submerge the end of the hose (Fig. 33).

(4) Open the bleeder screw at least one full turn or more to obtain a steady stream of brake fluid.

(5) After approximately 4–8 ounces of fluid have been bled through the brake circuit and an air-free flow is maintained in the clear plastic hose and jar, close the bleeder screw.

(6) Repeat this procedure at all the remaining bleeder screws.

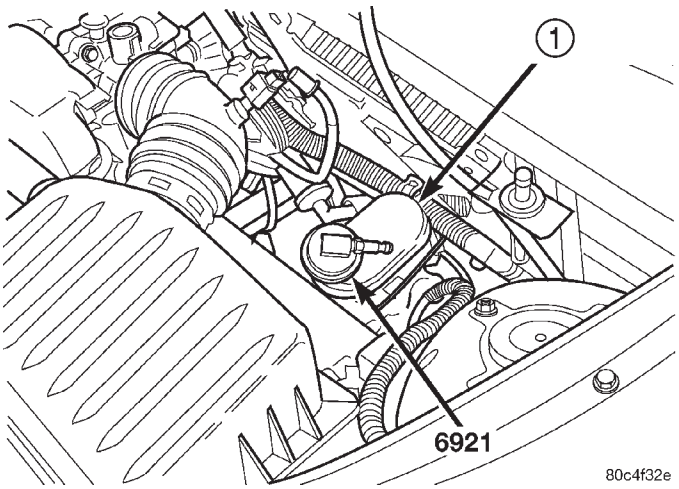

Fig. 34 Special Tool 6921

1 – MASTER CYLINDER FLUID RESERVOIR

(7) Check the brake pedal travel. If pedal travel is excessive or has not been improved, some air may still be trapped in the system. Rebleed the brakes as necessary.

(8) Test drive the vehicle to verify the brakes are operating properly and pedal feel is correct.

MASTER CYLINDER BLEEDING

(1) Clamp the master cylinder in a vise.

(2) Attach four Master Cylinder Bleed Tubes, Special Tool 8358-1, to the four ports of the master cylinder and tighten each in place (Fig. 35). The bleed tubes for the ports pertaining to the rear brakes are made to attach to the proportioning valves screwed into the master cylinder. Position the other end of the tubes into the master cylinder reservoir so their outlets are below the surface of the brake fluid in the reservoir when filled.

(3) Fill the brake fluid reservoir with Mopar brake fluid, or an equivalent conforming to DOT 3 specifications.

(4) Using a wooden dowel as a pushrod (Fig. 35), press the pistons inward slowly applying brake pressure, then release the pressure, allowing the pistons to return to the released position. Repeat this several times until all air bubbles are expelled out of the tubes and master cylinder bore.

(5) Remove the bleed tubes from the master cylinder and plug the outlet ports.

(6) Install the fill cap on the reservoir.

(7) Remove the master cylinder from the vise.

SERVICE PROCEDURES (Continued)

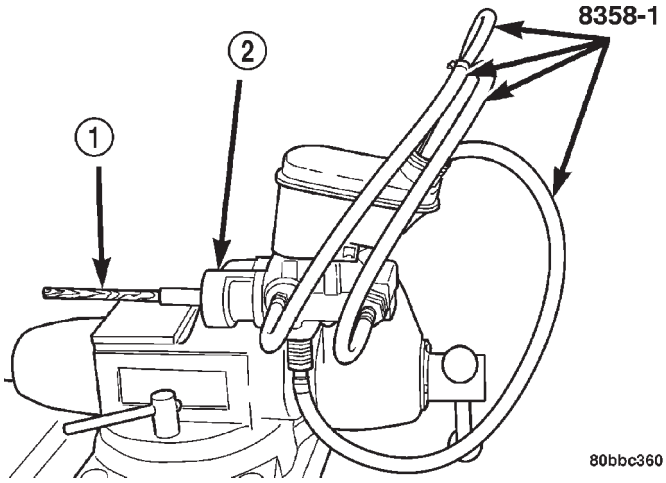

Fig. 35 Bleeding Master Cylinder

1 – WOODEN DOWEL
2 – MASTER CYLINDER

NOTE: It is not necessary to bleed the entire hydraulic system after replacing just the master cylinder unless the brake system has been open to air for an excessive amount of time or air is present in the lines. Only the master cylinder must be bled and filled.

BRAKE ROTOR MACHINING

NOTE: Refacing the rotor is not required each time the brake pads are replaced, only when the need is foreseen.

Any servicing of the rotor requires extreme care to maintain the rotor within service tolerances to ensure proper brake action.

If the rotor surface is deeply scored or warped, or there is a complaint of brake roughness or brake pedal pulsation, the rotor should be refaced using a hub-mounted on-car brake lathe (Fig. 36), or replaced.

The use of a hub-mounted on-car brake lathe is highly recommended to eliminate the possibility of excessive runout. It trues the brake rotor to the vehicle's hub and bearing.

NOTE: All rotors have markings for minimum allowable thickness cast on an un-machined surface of the rotor (Fig. 37).

Minimum allowable thickness is the minimum thickness which the brake rotor machined surface may be cut to.

CAUTION: Do not machine the rotor if it will cause the rotor to fall below minimum thickness.

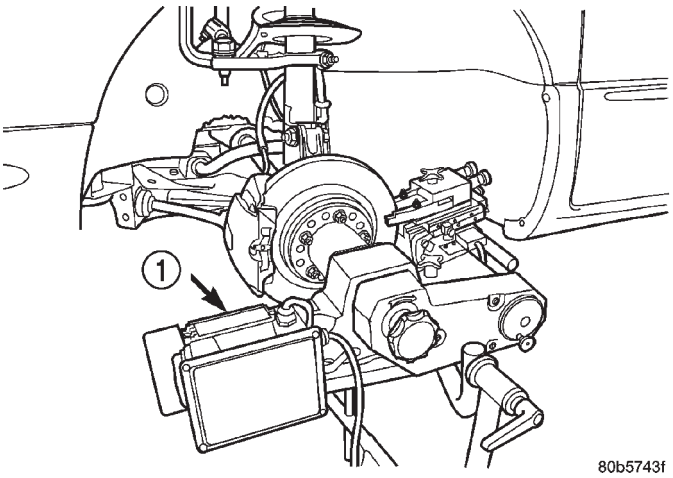

Fig. 36 On-Car Brake Lathe

1 – ON-CAR BRAKE LATHE

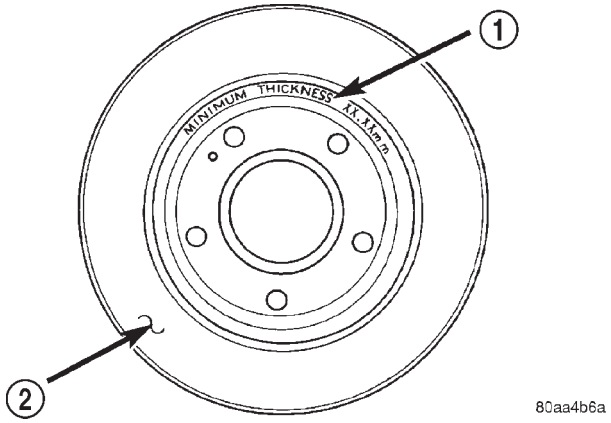

Fig. 37 Minimum Brake Rotor Thickness Markings (Typical)

1 – ROTOR MINIMUM THICKNESS MARKING
2 – ROTOR

Before installation, verify the brake rotor face and the hub adapters are free of any chips, rust, or contamination.

When mounting and using the brake lathe, strict attention to the brake lathe manufacturer's operating instructions is required.

Machine both sides of the brake rotor at the same time. Cutting both sides at the same time minimizes the possibility of a tapered or uneven cut.

SPECIFICATIONS AND LIMITS

When refacing a rotor, the required TIR (Total Indicator Reading) and thickness variation limits MUST BE MAINTAINED. Extreme care in the operation of rotor turning equipment is required.

SERVICE PROCEDURES (Continued)

BRAKE ROTOR LIMITS

Braking Rotor	Rotor Thickness	Minimum Rotor Thickness	Rotor Thickness Variation	Rotor Runout*
Front Rotor	22.91–23.10 mm 0.902–0.909 in.	21.40 mm 0.803 in.	0.010 mm 0.0004 in.	0.13 mm 0.005 in.
Rear Rotor	8.75–9.25 mm 0.344 -0.364 in.	7.25 mm 0.285 in.	0.013 mm 0.0005 in.	0.13 mm 0.005 in.
* TIR Total Indicator Reading (Measured On Vehicle)				

BRAKE DRUM MACHINING

If a brake drum is deeply scored or warped, it can be machined on a brake lathe equipped to machine brake drums. Follow the manufacturers instructions on the machining procedure.

Measure the brake drum diameter before machining. If machining the drum will cause the drum to exceed maximum allowable diameter, do not machine the brake drum. It needs to be replaced.

CAUTION: Do not machine the brake drum if it will cause the drum to exceed maximum allowable diameter.

All brake drums are marked with the maximum allowable brake drum diameter (Fig. 38).

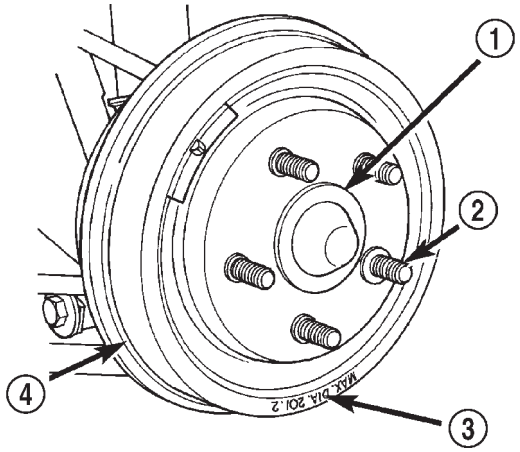

80aa4b6b

Fig. 38 Brake Drum Maximum Diameter Identification (Typical)

1 – HUB/BEARING ASSEMBLY
2 – WHEEL MOUNTING STUDS
3 – BRAKE DRUM MAXIMUM DIAMETER MARKING
4 – REAR BRAKE DRUM

When machining, make sure the final finish feed cut is fine in order to avoid a screw effect on the brake shoes when the brakes are applied. This final feed cut specification varies from lathe manufacturer to lathe manufacturer.

PARKING BRAKE AUTOMATIC ADJUSTER LOCKOUT

WARNING: THE AUTOMATIC ADJUSTING FEATURE OF THIS PARKING BRAKE LEVER CONTAINS A CLOCKSPRING LOADED TO APPROXIMATELY 19 POUNDS. DO NOT RELEASE THE AUTOMATIC ADJUSTER LOCKOUT DEVICE UNLESS THE REAR PARKING BRAKE CABLES AND EQUALIZER ARE CONNECTED TO THE LEVER OUTPUT CABLE. KEEP HANDS OUT OF AUTOMATIC ADJUSTER SECTOR AND PAWL AREA. FAILURE TO OBSERVE CAUTION IN HANDLING THIS MECHANISM COULD LEAD TO SERIOUS INJURY.

WARNING: WHEN REPAIRS TO THE PARKING BRAKE LEVER OR CABLES ARE REQUIRED, THE AUTOMATIC ADJUSTER MUST BE LOADED AND LOCKED OUT TO AVOID POSSIBLE INJURY.

LOCKING AUTOMATIC ADJUSTER OUT

(1) Block the tire and wheels so the vehicle does not move once the vehicle parking brake lever is released.

(2) Remove the transmission shift knob as necessary.

(3) Remove the screws attaching the center console, then remove the center console.

(4) Grasp the parking brake lever output cable by hand and pull upward. Continue pulling on the cable until an appropriate sized pin punch (drill bit or locking pin) can be inserted sufficiently through the hole in the left side of the lever mounting bracket (Fig. 39). This will lock the parking brake automatic adjustment mechanism in place and take tension off the parking brake cables. Slowly release the output cable. There should now be slack in the cables.

SERVICE PROCEDURES (Continued)

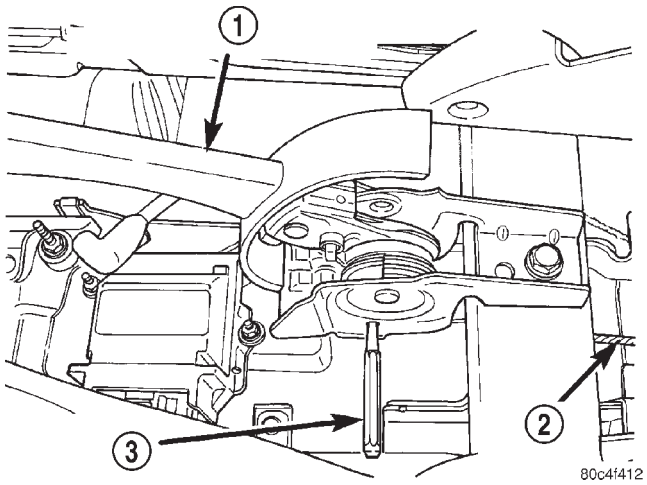

Fig. 39 Pin Punch Installed

1 – PARKING BRAKE LEVER
2 – OUTPUT CABLE
3 – PIN PUNCH

UNLOCKING AUTOMATIC ADJUSTER (UNLOADING)

NOTE: The parking brake lever can only be in the released position when releasing the automatic adjuster locking pin or pin punch.

(1) Be sure the rear parking brake cables are both properly installed in the equalizer.

(2) Keeping your hands clear of the automatic adjuster sector and pawl area, firmly grasp the parking brake lever pin punch (drill bit or locking pin if a new mechanism has been installed) (Fig. 39), then quickly remove it from the parking brake lever mechanism. This will allow the park brake lever mechanism to automatically adjust the parking brake cables.

(3) Cycle the parking brake lever once to position the parking brake cables, then return the parking brake lever to its released position.

(4) Check the rear wheels of the vehicle. They should rotate freely without dragging with the lever in its released position.

(5) Install the center console and its mounting screws.

(6) Remove the blocks from the tire and wheels.

REMOVAL AND INSTALLATION

SERVICE WARNINGS AND CAUTIONS

WARNING: DUST AND DIRT ACCUMULATING ON BRAKE PARTS DURING NORMAL USE MAY CONTAIN ASBESTOS FIBERS FROM PRODUCTION OR AFTERMARKET LININGS. BREATHING EXCESSIVE CONCENTRATIONS OF ASBESTOS FIBERS CAN CAUSE SERIOUS BODILY HARM. EXERCISE CARE WHEN SERVICING BRAKE PARTS. DO NOT SAND, OR GRIND BRAKE LINING UNLESS EQUIPMENT USED IS DESIGNED TO CONTAIN THE DUST RESIDUE. DO NOT CLEAN BRAKE PARTS WITH COMPRESSED AIR OR BY DRY BRUSHING. CLEANING SHOULD BE DONE BY DAMPENING THE BRAKE COMPONENTS WITH A FINE MIST OF WATER, THEN WIPING THE BRAKE COMPONENTS CLEAN WITH A DAMPENED CLOTH. DISPOSE OF CLOTH AND ALL RESIDUE CONTAINING ASBESTOS FIBERS IN AN IMPERMEABLE CONTAINER WITH THE APPROPRIATE LABEL. FOLLOW PRACTICES PRESCRIBED BY THE OCCUPATIONAL SAFETY AND HEALTH ADMINISTRATION (OSHA) AND THE ENVIRONMENTAL PROTECTION AGENCY (EPA) FOR THE HANDLING, PROCESSING, AND DISPOSITION OF DUST OR DEBRIS THAT MAY CONTAIN ASBESTOS FIBERS.

CAUTION: Never use gasoline, kerosene, alcohol, motor oil, transmission fluid, or any fluid containing mineral oil to clean the system components. These fluids damage rubber cups and seals. Use only fresh brake fluid or Mopar brake cleaner to clean or flush brake system components. These are the only cleaning materials recommended. If system contamination is suspected, check the fluid for dirt, discoloration, or separation into distinct layers. Also check the reservoir cap seal for distortion.

CAUTION: Use only Mopar® brake fluid or an equivalent from a tightly sealed container. Brake fluid must conform to DOT 3 specifications. Do not use petroleum-based fluid because seal damage in the brake system will result.

CAUTION: Brake fluid will damage painted surfaces. If brake fluid is spilled on any painted surfaces, wash it off immediately with water.

CAUTION: During service procedures, grease or any other foreign material must be kept off the caliper assembly, surfaces of the brake rotor and external surfaces of the hub. Avoid deformation, scratching or nicking of the brake rotor and brake shoe linings.

REMOVAL AND INSTALLATION (Continued)

BRAKE PEDAL (WITH AUTOMATIC TRANSAXLE)

NOTE: Before proceeding with this procedure, review SERVICE WARNINGS AND CAUTIONS at the beginning of REMOVAL AND INSTALLATION in this section.

REMOVAL

(1) Unclip the air cleaner cover (two clips) and move the cover aside.

(2) Disconnect and isolate the battery negative cable from its post on the battery.

(3) Remove the silencer pad below the knee blocker.

(4) Fold down and remove the knee blocker.

(5) Remove the brake lamp switch by rotating the switch in a counterclockwise direction approximately 30 degrees (Fig. 40).

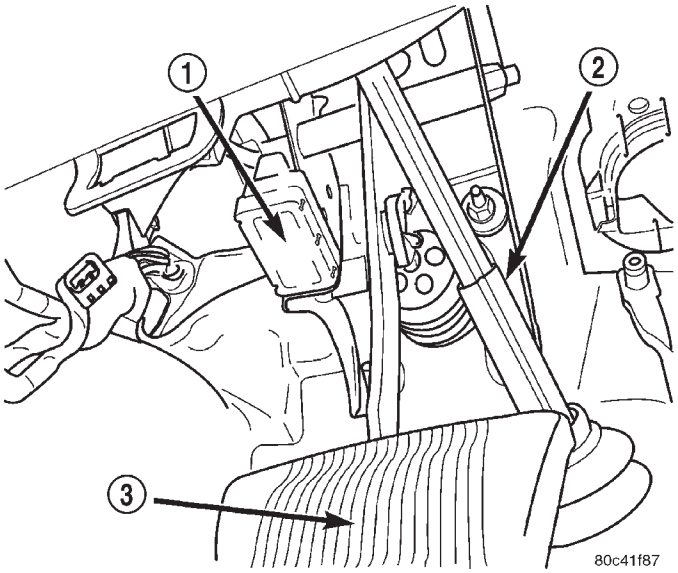

Fig. 40 Brake Lamp Switch

1 – BRAKE LAMP SWITCH
2 – STEERING COLUMN COUPLER
3 – BRAKE PEDAL

(6) Pull the switch rearward and remove it from its mounting bracket. Discard the brake lamp switch.

(7) Remove the clip securing the power brake booster input rod to the brake pedal (Fig. 41). Remove the input rod from the brake pedal.

(8) Remove the four nuts securing the power brake booster to the brake pedal bracket (Fig. 41).

(9) Remove the two remaining upper nuts securing the brake pedal bracket to the instrument panel support.

(10) Carefully remove the brake pedal and bracket assembly from the vehicle.

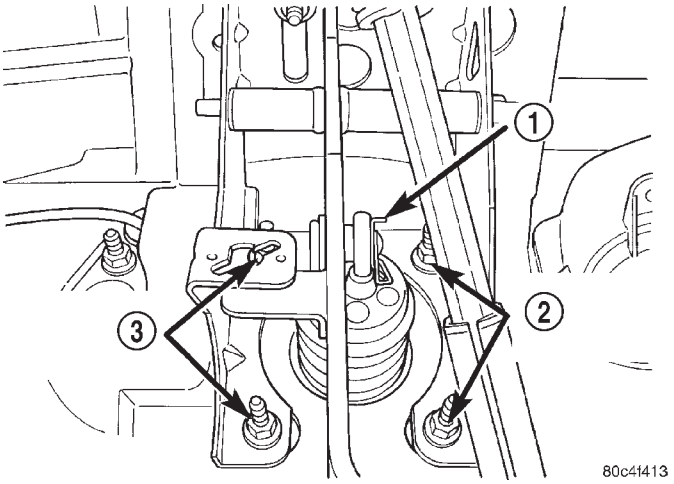

Fig. 41 Booster Mounting

1 – CLIP
2 – BOOSTER MOUNTING NUTS
3 – BOOSTER MOUNTING NUTS

(11) Remove the pivot shaft nut.

(12) Remove the pivot shaft out the right side of the bracket.

(13) Slide the pedal out of its bracket.

(14) The bushings can be removed from the pedal by sliding them out each side of the pivot.

INSTALLATION

(1) Lubricate the brake pedal bushings with Mopar® Lubriplate or an equivalent.

(2) If removed, slide a bushing in each side of the pedal until the bushing shoulder contacts the pedal pivot.

(3) Install the brake pedal and bushings into the pedal mounting bracket by sliding the pedal between the sides of the bracket behind the brake lamp switch mounting flange.

(4) Once the pedal bushings line up with the mounting holes in the bracket, install the pivot shaft through the pedal from the right side.

(5) Install the pivot shaft nut. Tighten the nut to a torque of 34 N·m (300 in. lbs.).

(6) Carefully install the brake pedal and bracket assembly in the vehicle lining up the bracket with the power brake booster mounting studs and the studs on the instrument panel support.

(7) Install the two upper nuts securing the brake pedal bracket to the instrument panel support. Install the two nuts all the way, but do not tighten them at this time.

(8) Install the four nuts securing the power brake booster to the brake pedal bracket (Fig. 41). Tighten the four nuts to a torque of 34 N·m (300 in. lbs.).

REMOVAL AND INSTALLATION (Continued)

(9) Tighten the two upper nuts securing the brake pedal bracket to the instrument panel support to a torque of 34 N·m (300 in. lbs.).

(10) Install the power brake booster input rod on the pin mounted on the side of the brake pedal. Install a new retaining clip on the end of the pin (Fig. 41). Do not reuse the old clip.

CAUTION: Do not reuse the original brake lamp switch. The switch can only be adjusted once. That is during initial installation of the switch. If the switch is not adjusted properly or has been removed for some service, a new switch must be installed and adjusted.

(11) Mount and adjust the NEW brake lamp switch using the following procedure:

- Install the switch in its bracket by aligning the index tab on the switch with the slot in the mounting bracket.
- When the switch is fully seated in its bracket, rotate the switch clockwise approximately 30° to lock the switch into place (Fig. 40).
- With the brake pedal in the fully released position, move the lever on the back of the brake lamp switch from the non-adjusted angle position to the full vertical position (Fig. 42). This will adjust the brake lamp switch to the vehicle.

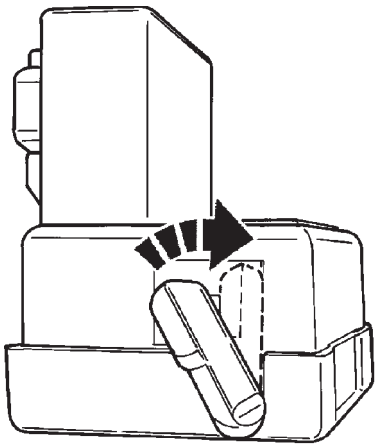

Fig. 42 Switch Adjustment Lever

(12) Install the knee blocker.

(13) Install the silencer pad below the knee blocker.

(14) Reconnect the battery negative terminal.

(15) Reinstall the air cleaner cover (two clips).

(16) Check the stop lamps to verify they are operating properly and not staying on when the pedal is in the released position.

(17) Road test the vehicle to ensure proper operation of the brakes and speed control (if equipped).

BRAKE PEDAL (WITH MANUAL TRANSAXLE)

NOTE: Before proceeding with this procedure, review SERVICE WARNINGS AND CAUTIONS at the beginning of REMOVAL AND INSTALLATION in this section.

REMOVAL

(1) Unclip the air cleaner cover (two clips) and move the cover aside.

(2) Disconnect and isolate the battery negative cable from its post on the battery.

(3) Remove the silencer pad below the knee blocker.

(4) Fold down and remove the knee blocker.

(5) Remove the brake lamp switch by rotating the switch in a counterclockwise direction approximately 30 degrees (Fig. 43).

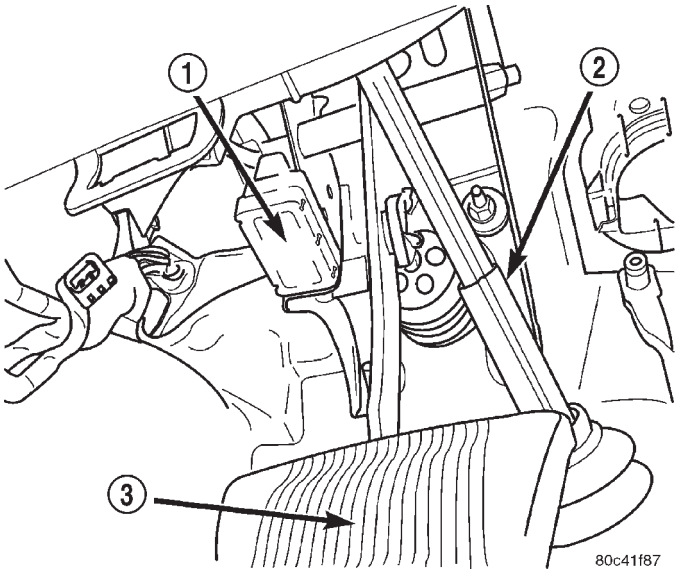

Fig. 43 Brake Lamp Switch

1 – BRAKE LAMP SWITCH
2 – STEERING COLUMN COUPLER
3 – BRAKE PEDAL

(6) Pull the switch rearward and remove it from its mounting bracket. Discard the brake lamp switch.

(7) Remove the clip securing the power brake booster input rod to the brake pedal (Fig. 44). Remove the input rod from the brake pedal.

(8) Remove the pivot shaft nut (Fig. 45).

(9) Start to remove the pivot shaft out the left side of the bracket (Fig. 45). Pull the shaft to the left until the brake pedal can be removed, stopping short of removing the shaft from the clutch pedal.

(10) Slide the brake pedal out of its bracket and remove it from the vehicle.

REMOVAL AND INSTALLATION (Continued)

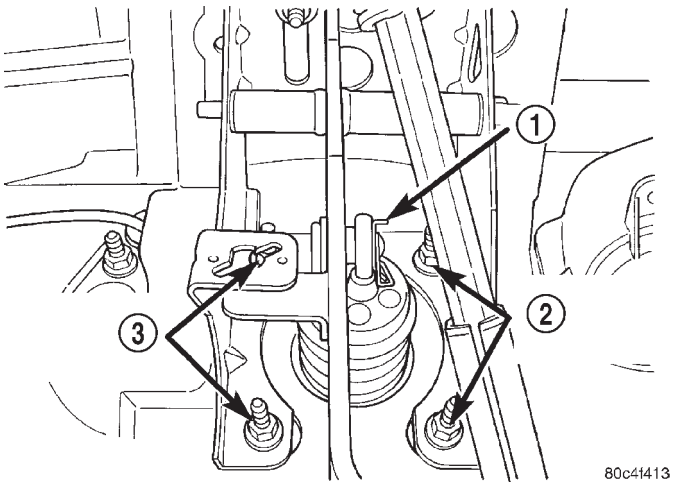

Fig. 44 Booster Push Rod Clip

1 – CLIP
2 – BOOSTER MOUNTING NUTS
3 – BOOSTER MOUNTING NUTS

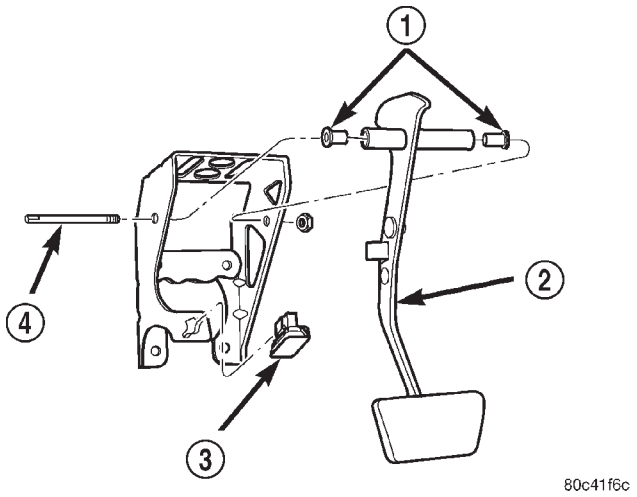

Fig. 45 Brake Pedal Mounting (Typical)

1 – BUSHINGS
2 – BRAKE PEDAL
3 – BRAKE LAMP SWITCH
4 – PIVOT SHAFT

(11) The bushings can be removed from the pedal by sliding them out each side (Fig. 45).

INSTALLATION

(1) Lubricate the brake pedal bushings with Mopar® Lubriplate or an equivalent.

(2) If removed, slide a bushing in each side of the pedal pivot until the bushing shoulder contacts the pedal pivot.

(3) Install the brake pedal and bushings into the pedal mounting bracket by sliding the pedal between the sides of the bracket behind the brake lamp switch mounting flange (Fig. 45).

(4) Once the pedal bushings line up with the mounting holes in the bracket, install the pivot shaft through the pedal from the left side (Fig. 45).

(5) Install the pivot shaft nut (Fig. 45). Tighten the nut to a torque of 34 N·m (300 in. lbs.).

(6) Install the power brake booster input rod on the pin mounted on the side of the brake pedal. Install a new retaining clip on the end of the pin (Fig. 44). Do not reuse the old clip.

CAUTION: Do not reuse the original brake lamp switch. The switch can only be adjusted once. That is during initial installation of the switch. If the switch is not adjusted properly or has been removed for some service, a new switch must be installed and adjusted.

(7) Mount and adjust the NEW brake lamp switch using the following procedure:

- Install the switch in its bracket by aligning the index tab on the switch with the slot in the mounting bracket.
- When the switch is fully seated in its bracket, rotate the switch clockwise approximately 30° to lock the switch into place (Fig. 43).
- With the brake pedal in the fully released position, move the lever on the back of the brake lamp switch from the non-adjusted angle position to the full vertical position (Fig. 46). This will adjust the brake lamp switch to the vehicle.

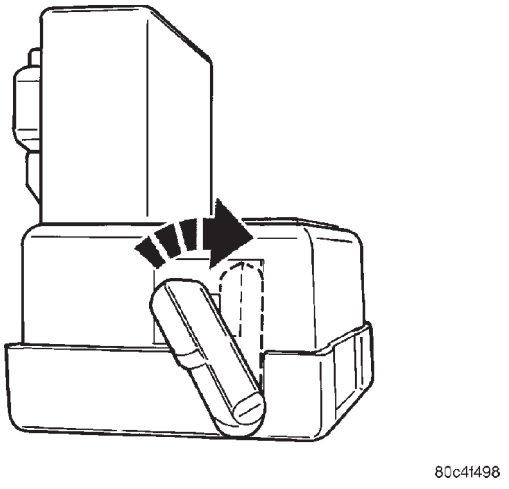

Fig. 46 Switch Adjustment Lever

(8) Install the knee blocker.

(9) Install the silencer pad below the knee blocker.

(10) Reconnect the battery negative terminal.

(11) Reinstall the air cleaner cover (two clips).

(12) Check the stop lamps to verify they are operating properly and not staying on when the pedal is in the released position.

(13) Road test the vehicle to ensure proper operation of the brakes and speed control (if equipped).

REMOVAL AND INSTALLATION (Continued)

BRAKE LAMP SWITCH

NOTE: Before proceeding with this procedure, review SERVICE WARNINGS AND CAUTIONS at the beginning of REMOVAL AND INSTALLATION in this section.

REMOVAL

(1) Unclip the air cleaner cover (two clips) and move the cover aside.

(2) Disconnect and isolate the battery negative cable from its post on the battery.

(3) Remove the silencer pad below the knee blocker.

(4) Fold down and remove the knee blocker.

(5) Remove the brake lamp switch by rotating the switch in a counterclockwise direction approximately 30 degrees (Fig. 47).

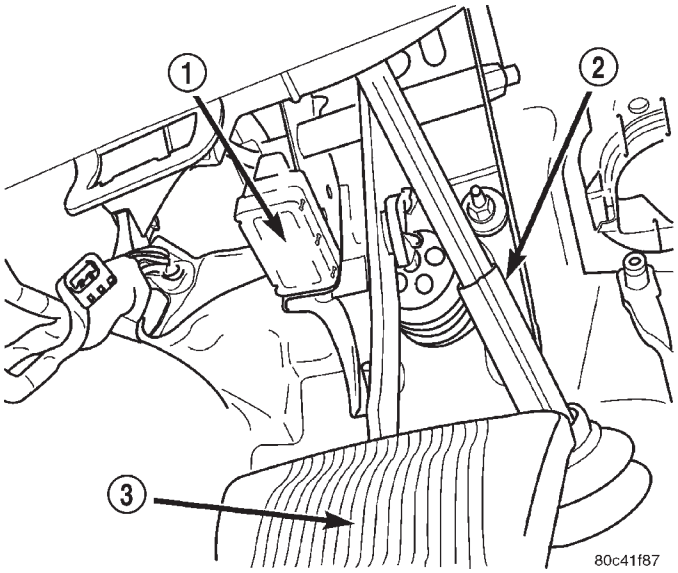

Fig. 47 Brake Lamp Switch

1 – BRAKE LAMP SWITCH
2 – STEERING COLUMN COUPLER
3 – BRAKE PEDAL

(6) Pull the switch rearward and remove it from its mounting bracket. Discard the brake lamp switch.

INSTALLATION

CAUTION: Do not reuse the original brake lamp switch. The switch can only be adjusted once. That is during initial installation of the switch. If the switch is not adjusted properly or has been removed for some service, a new switch must be installed and adjusted.

(1) Mount and adjust the NEW brake lamp switch using the following procedure:

- Install the switch in its bracket by aligning the index tab on the switch with the slot in the mounting bracket.
- When the switch is fully seated in its bracket, rotate the switch clockwise approximately 30° to lock the switch into place (Fig. 47).
- With the brake pedal in the fully released position, move the lever on the back of the brake lamp switch from the angled non-adjusted position to the full vertical position (Fig. 48). This will adjust the brake lamp switch to the vehicle.

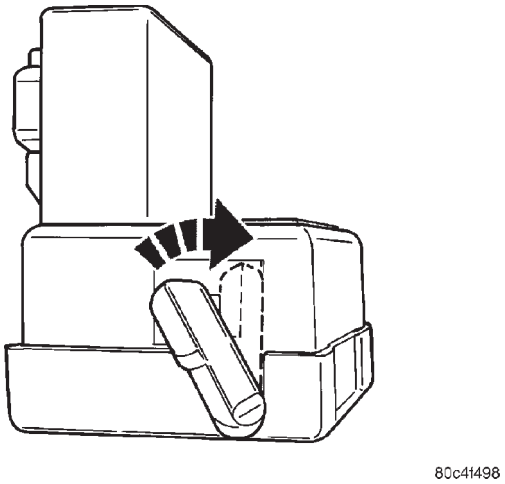

Fig. 48 Adjustment Lever Movement

(2) Install the knee blocker.

(3) Install the silencer pad below the knee blocker.

(4) Reconnect the battery negative terminal.

(5) Reinstall the air cleaner cover (two clips).

(6) Check the stop lamps to verify they are operating properly and not staying on when the pedal is in the released position.

(7) Road test the vehicle to ensure proper operation of the brakes (including ABS) and speed control (if equipped).

MASTER CYLINDER

NOTE: Before proceeding with this procedure, review SERVICE WARNINGS AND CAUTIONS at the beginning of REMOVAL AND INSTALLATION in this section.

REMOVAL

CAUTION: The vacuum in the power brake booster must be pumped down before removing the master cylinder to prevent the booster from sucking in any contamination. This can be done by pumping the brake pedal while the engine is not running until a firm brake pedal is achieved.

REMOVAL AND INSTALLATION (Continued)

(1) With the engine not running, pump the brake pedal 4-5 strokes until the pedal feel is firm.

(2) Unclip the air cleaner cover (two clips) and move the cover aside.

(3) Remove the air cleaner housing by pulling straight up.

(4) Disconnect the negative (ground) cable from the battery and isolate the cable.

(5) Unlatch the power distribution center, lift it up, and move it to the side.

(6) Remove the vehicle wiring harness connector from brake fluid level switch in master cylinder brake fluid reservoir (Fig. 49).

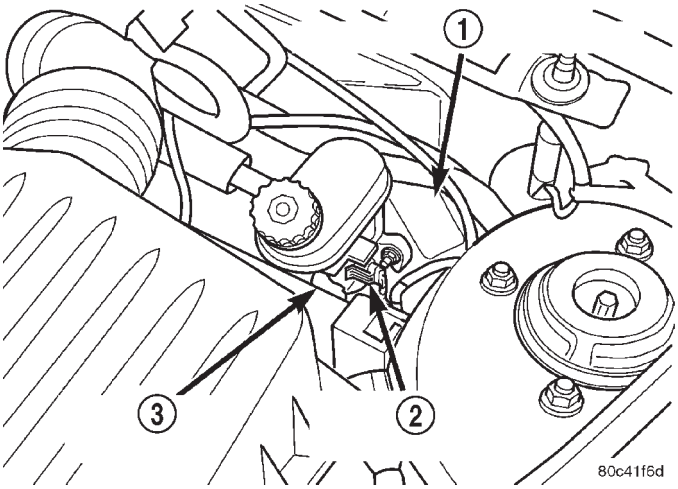

Fig. 49 Master Cylinder

1 – POWER BRAKE BOOSTER
2 – BRAKE FLUID LEVEL SWITCH
3 – MASTER CYLINDER

(7) Disconnect the two brake tubes from the master cylinder, and two brake tubes from the proportioning valves (Fig. 50). Install plugs at all of the open brake tube outlets on the master cylinder.

(8) Clean the area around where the master cylinder attaches to the power brake booster using a suitable brake cleaner such as Mopar Brake Parts Cleaner or an equivalent.

(9) Remove the two nuts attaching the master cylinder to the power brake booster.

(10) Slide the master cylinder straight out of the power brake booster.

(11) To remove the proportioning valves, unthread each from the master cylinder.

INSTALLATION

NOTE: The master cylinder must be bled before installing it on the vehicle.

(1) If removed, install the proportioning valves in their master cylinder ports. The valves are identical,

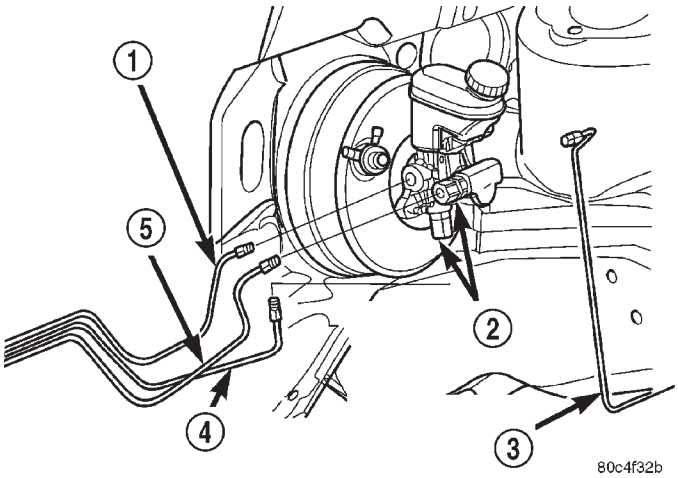

Fig. 50 Brake Tubes At Master Cylinder

1 – RIGHT FRONT BRAKE TUBE
2 – PROPORTIONING VALVES
3 – LEFT FRONT BRAKE TUBE
4 – LEFT REAR BRAKE TUBE
5 – RIGHT REAR BRAKE TUBE

so they can be installed in either master cylinder port going to the rear brakes. Make sure the O-rings on the proportioning valves are new.

(2) Bleed the master cylinder before installing it on the vehicle. Refer to MASTER CYLINDER BLEEDING in SERVICE PROCEDURES.

(3) Wipe the face of the power brake booster clean where the master cylinder seal comes in contact when it's installed. Do not get any cleaner or debris inside the booster.

(4) Position the master cylinder on the studs of the power brake booster, aligning the push rod of the power brake booster with master cylinder piston push rod. Carefully push the master cylinder onto the studs until it contacts the face of the booster.

(5) Install the two master cylinder mounting nuts and tighten each to a torque of 28 N·m (250 in. lbs.).

(6) Connect the four brake tubes to the master cylinder and proportioning valve ports (Fig. 50). Tighten all tube nuts to a torque of 17 N·m (145 in. lbs.).

(7) Connect the brake fluid level switch wiring connector.

(8) Install the power distribution center.

(9) Connect the negative (ground) cable on the battery.

(10) Install the air cleaner housing.

(11) Reinstall the air cleaner cover (two clips).

(12) Fill the master cylinder to the proper level.

(13) Road test the vehicle to ensure proper operation of the brakes.

REMOVAL AND INSTALLATION (Continued)

BRAKE FLUID RESERVOIR

NOTE: Before proceeding with this procedure, review SERVICE WARNINGS AND CAUTIONS at the beginning of REMOVAL AND INSTALLATION in this section.

NOTE: The master cylinder does not need to be removed from the power brake booster for removal and installation of the brake fluid reservoir.

REMOVAL

(1) Clean the master cylinder housing and brake fluid reservoir exterior surfaces.

(2) Remove the brake fluid reservoir cap. Using a clean syringe or siphoning tool, empty as much brake fluid as possible from the reservoir.

(3) Remove the vehicle wiring harness connector from brake fluid level switch in master cylinder brake fluid reservoir (Fig. 49).

(4) Remove the two plastic pins holding the reservoir to the master cylinder (Fig. 51).

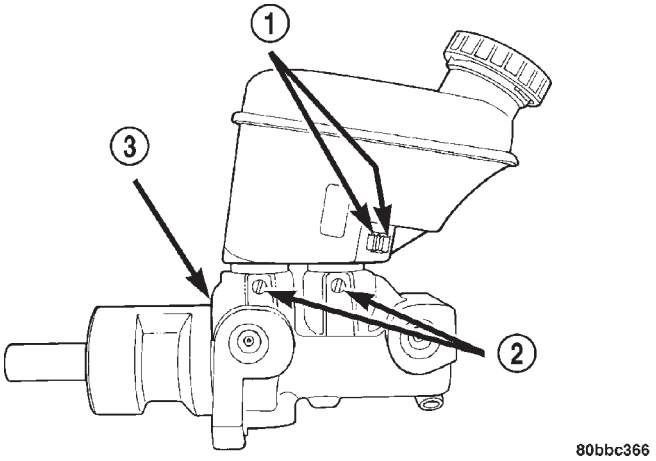

Fig. 51 Master Cylinder Reservoir

1 – BRAKE FLUID LEVEL SWITCH RETAINING TABS
2 – RESERVOIR RETAINING PINS
3 – SEAL

(5) Lift the reservoir from the master cylinder casting.

(6) Remove the grommets sealing the reservoir to the master cylinder housing (Fig. 52).

INSTALLATION

(1) Install new sealing grommets in the master cylinder housing (Fig. 52).

(2) Lubricate the sealing grommets with fresh clean DOT 3 brake fluid. Place the reservoir in position over the grommets making sure the filler hole is towards the front of the vehicle. Seat the reservoir into the grommets. While holding the reservoir firmly against the grommets, install the two plastic pins previously removed through their mounting holes until they protrude out the other side of the master cylinder reservoir (Fig. 51).

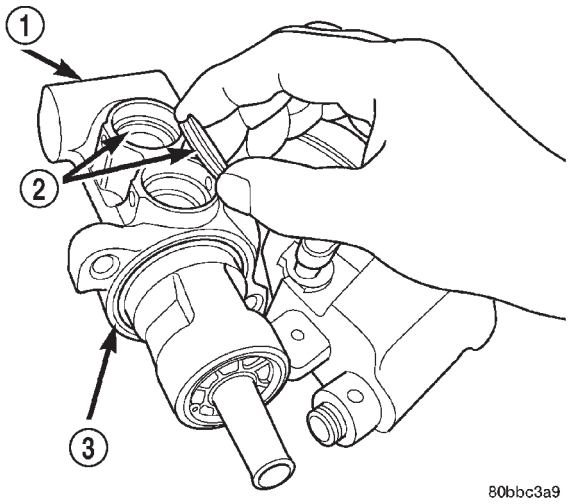

Fig. 52 Sealing Grommets

1 – MASTER CYLINDER
2 – GROMMETS
3 – SEAL

(3) Connect the brake fluid level switch wiring connector (Fig. 49).

(4) Fill the reservoir with fresh clean DOT 3 brake fluid. Refer to BRAKE FLUID LEVEL CHECKING in the SERVICE PROCEDURES section in this section of this service manual group.

BRAKE FLUID LEVEL SWITCH

NOTE: Before proceeding with this procedure, review SERVICE WARNINGS AND CAUTIONS at the beginning of REMOVAL AND INSTALLATION in this section.

REMOVAL

(1) Remove the vehicle wiring harness connector from brake fluid level switch in master cylinder brake fluid reservoir (Fig. 49).

(2) Push together the retaining tabs holding the brake fluid level switch in place in the brake fluid reservoir (Fig. 51).

(3) Pull the brake fluid level switch out the other side of the reservoir.

INSTALLATION

(1) Align the brake fluid level switch with its mounting hole on the left side of the master cylinder brake fluid reservoir. Push the switch into the fluid reservoir until the switch retaining tabs are

REMOVAL AND INSTALLATION (Continued)

expanded on the other side of the reservoir, locking it in place (Fig. 51).

(2) Connect the brake fluid level switch wiring connector (Fig. 49).

POWER BRAKE BOOSTER

NOTE: Before proceeding with this procedure, review SERVICE WARNINGS AND CAUTIONS at the beginning of REMOVAL AND INSTALLATION in this section.

REMOVAL

(1) Remove the air cleaner cover and hose to the throttle body.

(2) Remove the air cleaner housing by pulling straight up.

(3) Disconnect negative (ground) cable from the battery and isolate the cable.

(4) Unlatch the power distribution center, lift it up, and move it to the side.

(5) Remove the master cylinder. For the master cylinder without ABS removal and installation procedure, refer to MASTER CYLINDER in this section. For the master cylinder with ABS removal and installation procedure, refer to MASTER CYLINDER in the ANTILOCK BRAKE SYSTEM section.

(6) If the vehicle is equipped with ABS, remove the integrated control unit (ICU). Refer to INTEGRATED CONTROL UNIT in REMOVAL AND INSTALLATION within the ANTILOCK BRAKE SYSTEM section.

(7) If the vehicle is equipped with ABS, remove the three bolts securing the ICU mounting bracket to the frame rail (Fig. 53).

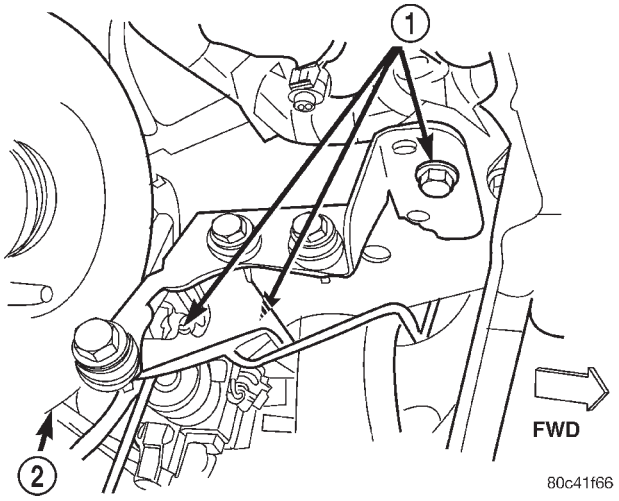

Fig. 53 ICU Mounting Bracket

1 – BOLTS
2 – BOOSTER

(8) Disconnect the vacuum hoses from the check valve on the power brake booster (Fig. 54), but do not remove the check valve from power brake booster.

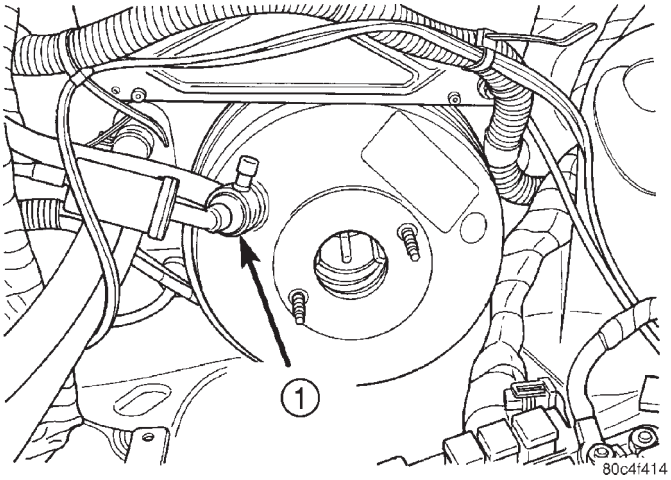

Fig. 54 Vacuum Check Valve

1 – VACUUM CHECK VALVE

(9) Inside the vehicle, remove the silencer pad below the knee blocker.

(10) Fold down and remove the knee blocker.

(11) Locate the brake pedal-to-power brake booster input rod attachment under the instrument panel. Position a small screwdriver under the center tang of the retaining clip (Fig. 55). Rotate the screwdriver enough to allow the retaining clip tang to pass over the end of the brake pedal pin. Remove the clip.

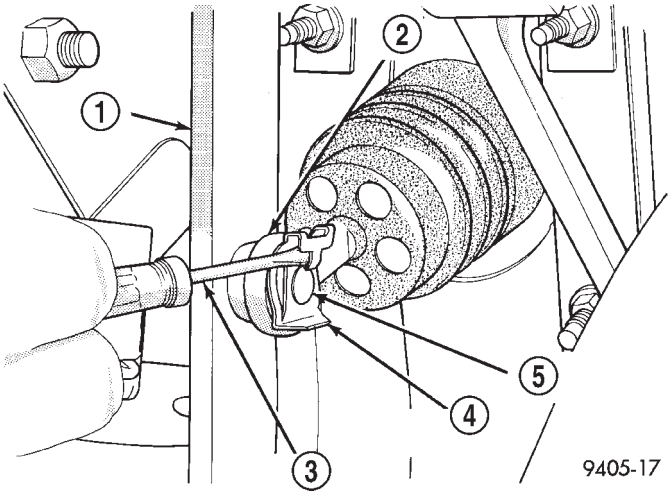

Fig. 55 Retaining Clip

1 – BRAKE PEDAL
2 – INPUT ROD
3 – SCREWDRIVER
4 – RETAINING CLIP
5 – BRAKE PEDAL PIN

REMOVAL AND INSTALLATION (Continued)

CAUTION: Discard the used retaining clip, it is not to be reused. Replace the clip with a new one on reassembly.

(12) Remove the four nuts attaching the power brake booster to the instrument panel (Fig. 56). The nuts are accessible from under the instrument panel in the area of the brake pedal bracket.

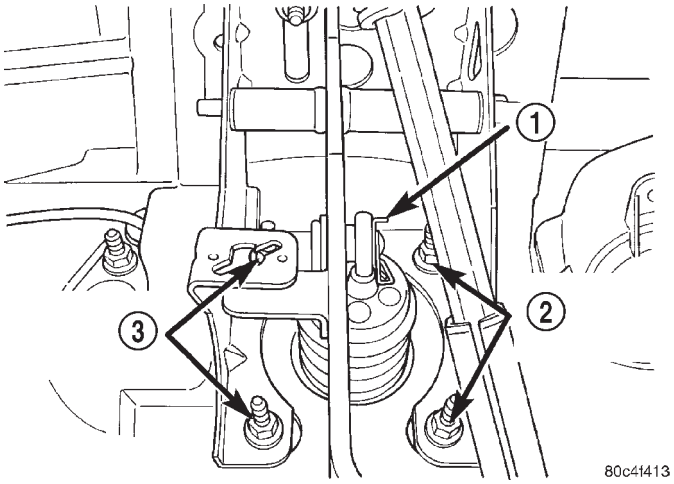

Fig. 56 Power Brake Booster Mounting

1 – CLIP
2 – BOOSTER MOUNTING NUTS
3 – BOOSTER MOUNTING NUTS

(13) Slide the power brake booster forward until mounting studs clear the instrument panel, then remove it from the vehicle.

INSTALLATION

(1) Install the power brake booster by sliding the input rod and studs through the dash panel and into mounting position.

(2) Under the instrument panel, install the four power brake booster mounting nuts (Fig. 56). Tighten the nuts to a torque of 34 N·m (300 in. lbs.).

(3) Using Mopar Lubriplate, or an equivalent, coat the surface of the brake pedal pin where it contacts the brake booster input rod.

CAUTION: Use only a new brake booster input rod-to-brake pedal retaining clip to ensure proper retainment.

(4) Connect the power brake booster input rod-to-brake pedal pin. Install a new retaining clip. Do not use the old clip.

CAUTION: Do not reuse the original brake lamp switch. The switch can only be adjusted once. That is during initial installation of the switch. If the switch is not adjusted properly or has been removed for some service, a new switch must be installed and adjusted.

(5) Remove and replace the brake lamp switch with a NEW switch. Refer to BRAKE LAMP SWITCH in this section. Discard the original brake lamp switch.

(6) Install the knee blocker.

(7) Install the silencer pad below the knee blocker.

(8) Connect all previously removed vacuum hoses to the vacuum check valve (Fig. 54).

(9) If the vehicle is equipped with ABS, install the ICU mounting bracket on the frame rail using its three bolts (Fig. 53). Tighten the nuts to a torque of 23 N·m (200 in. lbs.).

(10) If the vehicle is equipped with ABS, reinstall the ICU. Refer to INTEGRATED CONTROL UNIT in REMOVAL AND INSTALLATION within the ANTILOCK BRAKE SYSTEM section.

(11) Install the master cylinder. For the master cylinder without ABS removal and installation procedure, refer to MASTER CYLINDER in this section. For the master cylinder with ABS removal and installation procedure, refer to MASTER CYLINDER in the ANTILOCK BRAKE SYSTEM section.

(12) Install the power distribution center.

(13) Connect the negative (ground) cable on the battery.

(14) Install the air cleaner housing.

(15) Reinstall the air cleaner cover and hose to throttle body.

(16) Bleed the base brake system.

(17) Road test the vehicle to ensure proper operation of the brakes.

PROPORTIONING VALVE

NOTE: Before proceeding with this procedure, review SERVICE WARNINGS AND CAUTIONS at the beginning of REMOVAL AND INSTALLATION in this section.

REMOVAL

(1) Using a brake pedal holder, depress the brake pedal past its first one inch of travel and hold it in this position (Fig. 57). This will isolate the master cylinder from the brake hydraulic system and will not allow the brake fluid to drain out of the master cylinder reservoir.

NOTE: To access the lower (left rear) proportioning valve, it may help to remove the air cleaner cover and hose to the throttle body.

(2) Disconnect the brake tube from the proportioning valve requiring removal (Fig. 58).

REMOVAL AND INSTALLATION (Continued)

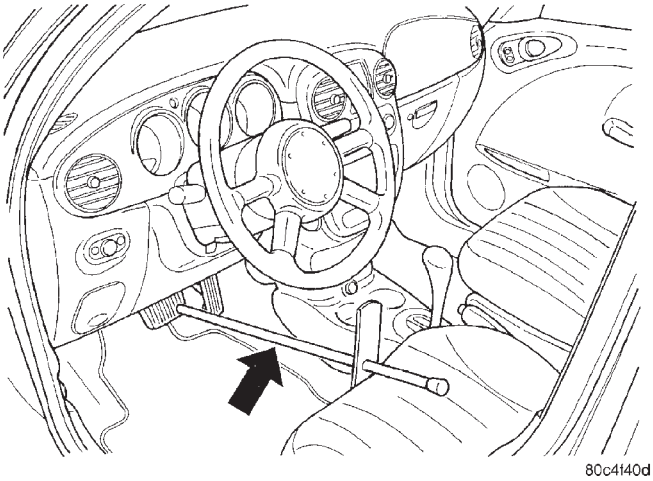

Fig. 57 Brake Pedal Holder

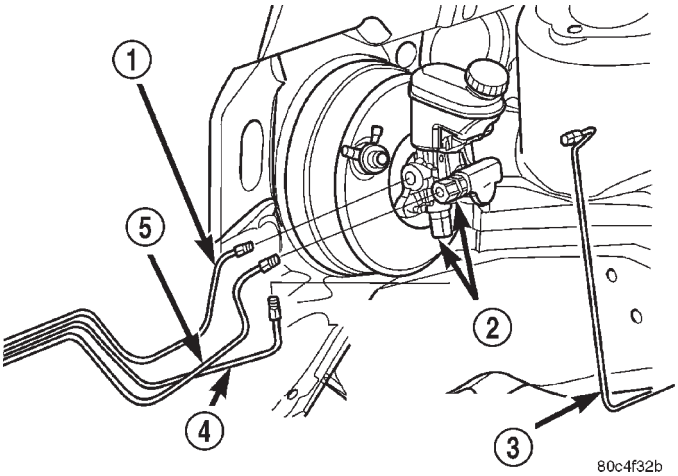

Fig. 58 Proportioning Valves On Master Cylinder

1 – RIGHT FRONT BRAKE TUBE
2 – PROPORTIONING VALVES
3 – LEFT FRONT BRAKE TUBE
4 – LEFT REAR BRAKE TUBE
5 – RIGHT REAR BRAKE TUBE

(3) Unscrew the Proportioning valve from the master cylinder.

INSTALLATION

(1) Lubricate the O-ring on the proportioning valve. Make sure the O-ring on the proportioning valve is new.

(2) Install the proportioning valve in its master cylinder port. Tighten the proportioning valve to a torque of 40 N·m (30 ft. lbs.).

(3) Connect the brake tube to the proportioning valve (Fig. 58). Tighten the tube nut to a torque of 17 N·m (145 in. lbs.).

NOTE: Reinstall the air cleaner cover and hose if earlier removed to gain more access to the lower (left rear) proportioning valve.

(4) Remove the brake pedal holder (Fig. 57).

(5) Bleed the affected brake line. See BASE BRAKE BLEEDING in the SERVICE PROCEDURES section.

(6) Road test the vehicle to ensure proper operation of the brakes.

BRAKES TUBES AND HOSES

NOTE: Brake hoses for each brake are unique and are not interchangeable.

Always use Mopar® replacement brake hoses to ensure quality, correct length and superior fatigue life. Care should be taken to make sure that the tube and hose mating surfaces are clean and free from nicks and burrs.

Use new copper seal washers on all connections using banjo bolts and tighten all the fittings to their specified torques.

Follow the procedures in the next three paragraphs to reduce the potential for twisting the brake hose during installation.

The flexible front hydraulic brake hose should always be installed on the vehicle by first attaching the banjo fitting to the disc brake caliper. Attach the hose to the brake tubing before attaching it to the front frame rail. Tighten all brake line fittings to the specified torque.

On vehicles equipped with rear drum brakes, loosely install the rear brake hose to the wheel cylinder first, then attach the brackets to the axle. Next, loosely install the hose to the steel tube coming from the master cylinder. Finally, tighten the tube nut at each end of the brake hose.

On vehicles equipped with rear disc brakes, attach the brake hose banjo fitting to the caliper first, then attach the brackets to the axle. Next, install the hose to the steel tube coming from the master cylinder. Finally, tighten the tube nut at the each end of the brake hose.

Only double wall 4.75 mm (3/16 in.) steel brake line tubing with Nygal coating should be used for replacement along with its special tube nuts. Do not route the tubes against sharp edges, moving components, or into hot areas. All tubes should be properly attached with the recommended retaining clips.

DISC BRAKE CALIPER (FRONT)

NOTE: Before proceeding with this procedure, review SERVICE WARNINGS AND CAUTIONS at the beginning of REMOVAL AND INSTALLATION in this section.

2001 PT Service Manual
Publication No. 81-370-1111
TSB 26-01-02 January, 2002

REMOVAL AND INSTALLATION (Continued)

REMOVAL

(1) Using a brake pedal holding tool as shown (Fig. 59), depress the brake pedal past its first one inch of travel and hold it in this position. This will isolate the master cylinder from the brake hydraulic system and will not allow the brake fluid to drain out of the master cylinder reservoir when the lines are opened.

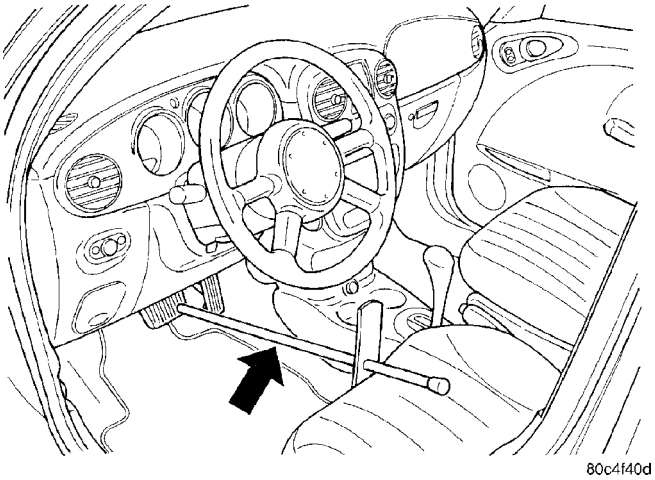

Fig. 59 Brake Pedal Holding Tool

(2) Raise the vehicle. Refer to HOISTING in the LUBRICATION AND MAINTENANCE section.

(3) Remove the front tire and wheel assembly.

(4) Remove the banjo bolt connecting the brake hose to the brake caliper (Fig. 60). There are two washers (one on each side of the flex hose fitting) that will come off with the banjo bolt. Discard the washers.

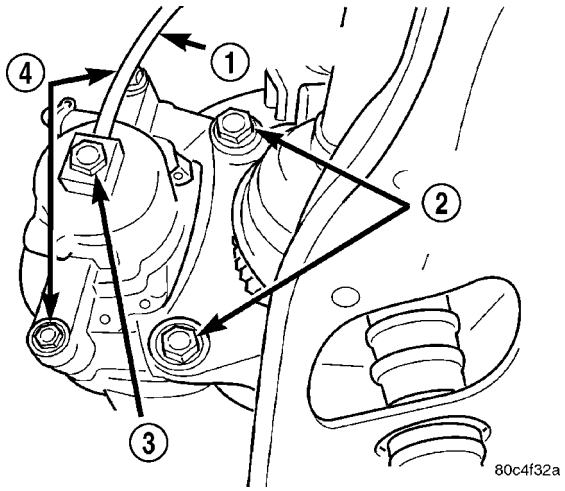

Fig. 60 Brake Caliper Mounting

1 – BRAKE HOSE
2 – ADAPTER MOUNTING BOLTS
3 – BANJO BOLT
4 – CALIPER GUIDE PIN BOLTS

(5) Remove the two brake caliper guide pin bolts (Fig. 60).

(6) Remove the disc brake caliper from the disc brake adapter.

INSTALLATION

(1) Completely retract the caliper piston back into the bore of the caliper. Use a C-clamp to retract the piston. Place a wood block over the piston before installing the C-clamp to avoid damaging the piston.

CAUTION: Use care when installing the caliper onto the disc brake adapter to avoid damaging the boots on the caliper guide pins.

(2) Install the disc brake caliper over the brake shoes on the brake caliper adapter. Make sure the springs on the shoes do not get caught in the hole formed into the center of the caliper housing.

(3) Align the caliper guide pin bolt holes with the guide pins. Install the caliper guide pin bolts and tighten them to a torque of 35 N·m (26 ft. lbs.) (Fig. 60).

(4) Install the banjo bolt connecting the brake hose to the brake caliper (Fig. 60). Install NEW washers on each side of the hose fitting as the banjo bolt is guided through the fitting. Thread the banjo bolt into the caliper and tighten it to a torque of 26 N·m (230 in. lbs.).

(5) Install the tire and wheel assembly. Tighten the wheel mounting nuts to a torque of 135 N·m (100 ft. lbs.).

(6) Lower the vehicle.

(7) Remove the brake pedal holding tool.

(8) Bleed the caliper as necessary. Refer to BASE BRAKE BLEEDING in the SERVICE PROCEDURES section.

(9) Road test the vehicle and make several stops to wear off any foreign material on the brakes and to seat the brake shoes.

DISC BRAKE CALIPER ADAPTER (FRONT)

NOTE: Before proceeding with this procedure, review SERVICE WARNINGS AND CAUTIONS at the beginning of REMOVAL AND INSTALLATION in this section.

REMOVAL

(1) Raise the vehicle. Refer to HOISTING in the LUBRICATION AND MAINTENANCE section.

(2) Remove the front tire and wheel assembly.

(3) Remove the two brake caliper guide pin bolts (Fig. 61).

(4) Remove the disc brake caliper from the adapter. Hang the caliper out of the way using wire

REMOVAL AND INSTALLATION (Continued)

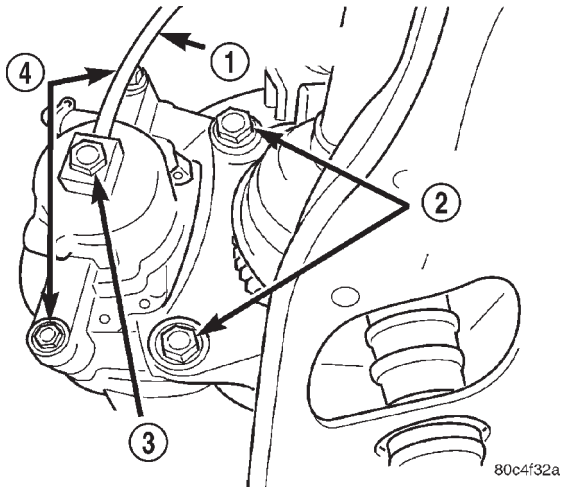

Fig. 61 Brake Caliper Mounting

1 – BRAKE HOSE
2 – ADAPTER MOUNTING BOLTS
3 – BANJO BOLT
4 – CALIPER GUIDE PIN BOLTS

or a bungee cord. Use care not to overextend the brake hose when doing this.

(5) Remove the brake shoes from the disc brake caliper adapter (Fig. 62).

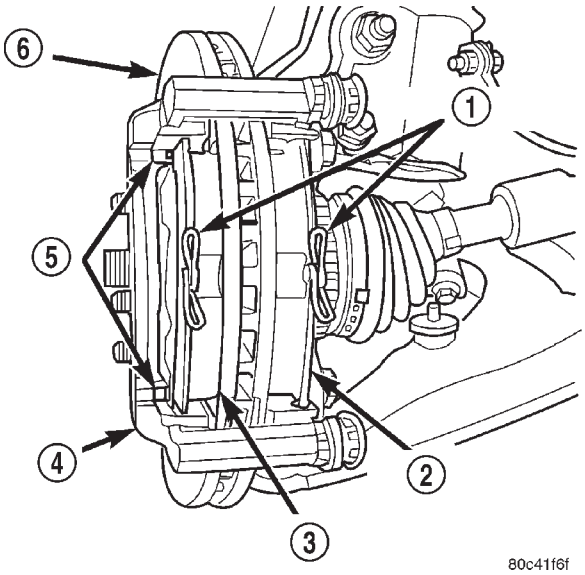

Fig. 62 Brake Shoes Mounted In Adapter

1 – SPRINGS
2 – INBOARD SHOE
3 – OUTBOARD SHOE
4 – DISC BRAKE ADAPTER
5 – ABUTMENT SHIMS
6 – BRAKE ROTOR

(6) Remove the abutment shims from the adapter (Fig. 62).

(7) Remove the two bolts securing the disc brake caliper adapter to the steering knuckle (Fig. 61).

(8) Remove the disc brake caliper adapter.

INSTALLATION

(1) Install the disc brake caliper adapter on the steering knuckle.

(2) Install the two bolts securing the disc brake caliper adapter to the steering knuckle (Fig. 61). Tighten the bolts to a torque of 104 N·m (77 ft. lbs.).

(3) Attach the two abutment shims to the adapter fitting the contour of each shim to the adapter's contour (Fig. 62).

(4) Place the brake shoes in the abutment shims clipped into the disc brake caliper adapter as shown (Fig. 62). Place the shoe with the wear indicator attached on the inboard side.

CAUTION: Use care when installing the caliper onto the disc brake adapter to avoid damaging the boots on the caliper guide pins.

(5) Install the disc brake caliper over the brake shoes on the brake caliper adapter. Make sure the springs on the shoes do not get caught in the hole formed into the center of the caliper housing.

(6) Align the caliper guide pin bolt holes with the guide pins. Install the caliper guide pin bolts and tighten them to a torque of 35 N·m (26 ft. lbs.) (Fig. 61).

(7) Install the tire and wheel assembly. Tighten the wheel mounting nuts to a torque of 135 N·m (100 ft. lbs.).

(8) Lower the vehicle.

(9) Road test the vehicle and make several stops to wear off any foreign material on the brakes and to seat the brake shoes.

DISC BRAKE CALIPER GUIDE PINS

NOTE: Before proceeding with this procedure, review SERVICE WARNINGS AND CAUTIONS at the beginning of REMOVAL AND INSTALLATION in this section.

REMOVAL

(1) Raise the vehicle. Refer to HOISTING in the LUBRICATION AND MAINTENANCE section.

(2) Remove the front tire and wheel assembly.

(3) Remove the two brake caliper guide pin bolts (Fig. 63).

(4) Remove the disc brake caliper from the disc brake caliper adapter and hang it out of the way using wire or a bungee cord. Use care not to overextend the brake hose when doing this.

REMOVAL AND INSTALLATION (Continued)

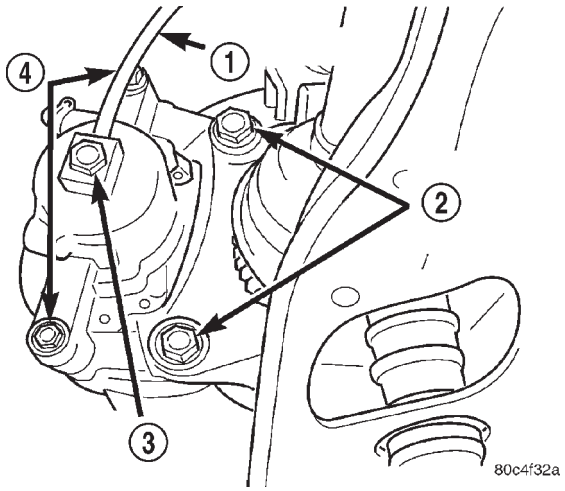

Fig. 63 Brake Caliper Mounting

1 – BRAKE HOSE
2 – ADAPTER MOUNTING BOLTS
3 – BANJO BOLT
4 – CALIPER GUIDE PIN BOLTS

(5) Remove the guide pins and boots from the adapter as shown (Fig. 64).

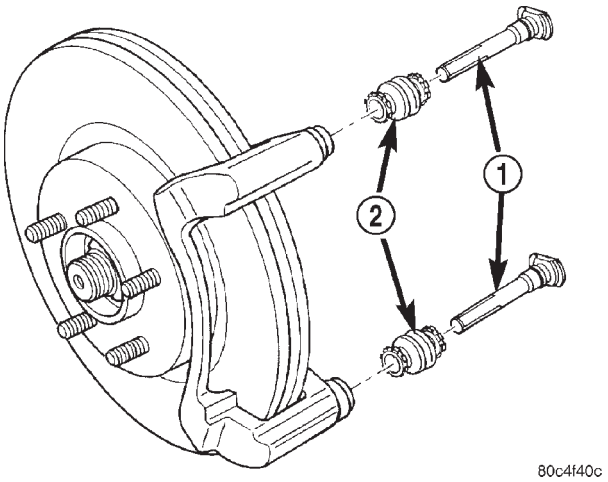

Fig. 64 Guide Pins And Boots

1 – PINS
2 – BOOTS

INSTALLATION

(1) Lubricate the guide pins and inside the boots with the packet supplied with the service kit, Sythesco GLK-1 lubricant or equivalent.

(2) Install the guide pins and boots in the adapter as shown (Fig. 64). The boots have grooves built into their inner lips to fit onto the pins and adapter.

CAUTION: Use care when installing the caliper onto the disc brake adapter to avoid damaging the boots on the caliper guide pins.

(3) Install the disc brake caliper over the brake shoes on the brake caliper adapter. Make sure the springs on the shoes do not get caught in the hole formed into the center of the caliper housing.

(4) Align the caliper guide pin bolt holes with the guide pins. Install the caliper guide pin bolts and tighten them to a torque of 35 N·m (26 ft. lbs.) (Fig. 63).

(5) Install the tire and wheel assembly. Tighten the wheel mounting nuts to a torque of 135 N·m (100 ft. lbs.).

(6) Lower the vehicle.

(7) Pump the brake pedal several times before moving the vehicle to set the shoes to the brake rotor.

DISC BRAKE SHOES (FRONT)

NOTE: Before proceeding with this procedure, review SERVICE WARNINGS AND CAUTIONS at the beginning of REMOVAL AND INSTALLATION in this section.

REMOVAL

(1) Raise the vehicle. Refer to HOISTING in the LUBRICATION AND MAINTENANCE section.

NOTE: Perform steps Step 2 through Step 5on each side of the vehicle.

(2) Remove the front tire and wheel assembly.

(3) Remove the two brake caliper guide pin bolts (Fig. 65).

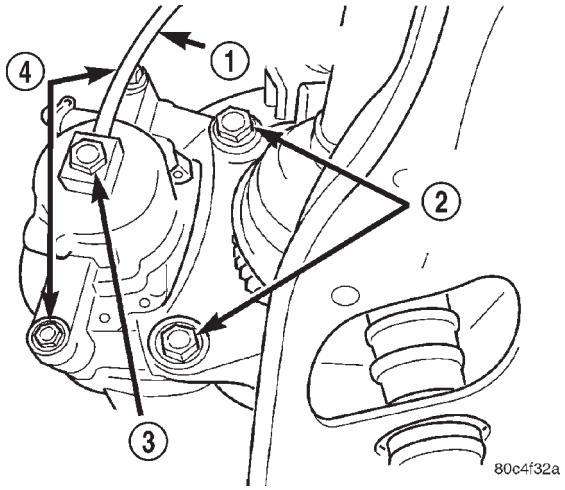

Fig. 65 Brake Caliper Mounting

1 – BRAKE HOSE
2 – ADAPTER MOUNTING BOLTS
3 – BANJO BOLT
4 – CALIPER GUIDE PIN BOLTS

REMOVAL AND INSTALLATION (Continued)

(4) Remove the disc brake caliper from the disc brake adapter and hang out of the way using wire or a bungee cord. Use care not to overextend the brake hose when doing this.

(5) Remove the brake shoes from the disc brake caliper adapter (Fig. 66).

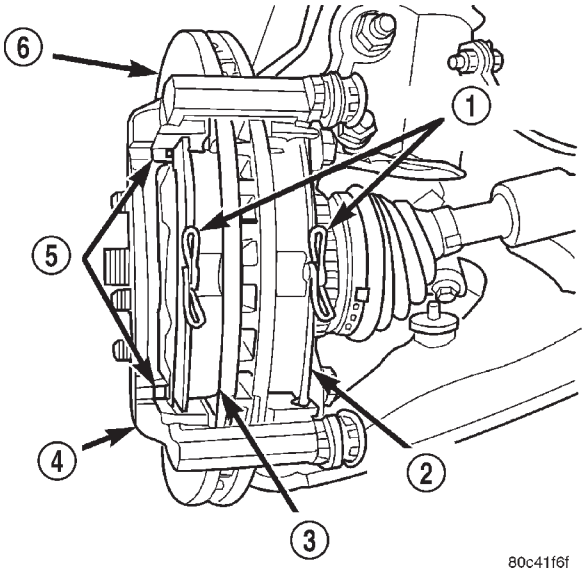

Fig. 66 Brake Shoes Mounted In Adapter

1 – SPRINGS
2 – INBOARD SHOE
3 – OUTBOARD SHOE
4 – DISC BRAKE ADAPTER
5 – ABUTMENT SHIMS
6 – BRAKE ROTOR

INSTALLATION

NOTE: Perform steps Step 1 through Step 5on each side of the vehicle.

NOTE: Inboard brake shoes are not identical side-to-side. The audible wear indicators are placed on opposite ends. Make sure that the audible wear indicator is placed toward the top when the inboard shoes are installed on each side.

(1) Place the brake shoes in the abutment shims clipped into the disc brake caliper adapter as shown (Fig. 66). Place the shoe with the wear indicator attached on the inboard side.

(2) Completely retract the caliper piston back into the bore of the caliper.

CAUTION: Use care when installing the caliper onto the disc brake adapter to avoid damaging the boots on the caliper guide pins.

(3) Install the disc brake caliper over the brake shoes on the brake caliper adapter. Make sure the springs on the shoes do not get caught in the hole formed into the center of the caliper housing.

(4) Align the caliper guide pin bolt holes with the guide pins. Install the caliper guide pin bolts and tighten them to a torque of 35 N·m (26 ft. lbs.) (Fig. 65).

(5) Install the tire and wheel assembly. Tighten the wheel mounting nuts to a torque of 135 N·m (100 ft. lbs.).

(6) Lower the vehicle.

(7) Pump the brake pedal several times before moving the vehicle to set the shoes to the brake rotor.

(8) Check and adjust the brake fluid level as necessary.

(9) Road test the vehicle and make several stops to wear off any foreign material on the brakes and to seat the brake shoes.

BRAKE ROTOR (FRONT)

NOTE: Before proceeding with this procedure, review SERVICE WARNINGS AND CAUTIONS at the beginning of REMOVAL AND INSTALLATION in this section.

REMOVAL

(1) Raise the vehicle. Refer to HOISTING in the LUBRICATION AND MAINTENANCE section.

(2) Remove the front tire and wheel assembly.

(3) Slide the caliper outward in an effort to retract the caliper piston into its bore.

(4) Remove the two bolts securing disc brake caliper adapter to the steering knuckle (Fig. 67).

(5) Remove the disc brake caliper and adapter from the knuckle as an assembly. Hang the assembly out of the way using wire or a bungee cord. Use care not to overextend the brake hose when doing this.

(6) Remove the clips retaining the brake rotor to the wheel studs.

(7) Remove the brake rotor.

INSTALLATION

(1) Install the brake rotor over the studs on the hub.

(2) Install the disc brake caliper and adapter assembly over the brake rotor.

(3) Install the mounting bolts securing the caliper adapter to the steering knuckle (Fig. 67). Tighten the bolts to a torque of 104 N·m (77 ft. lbs.).

(4) Install the tire and wheel assembly. Tighten the wheel mounting nuts to a torque of 135 N·m (100 ft. lbs.).

(5) Lower the vehicle.

REMOVAL AND INSTALLATION (Continued)

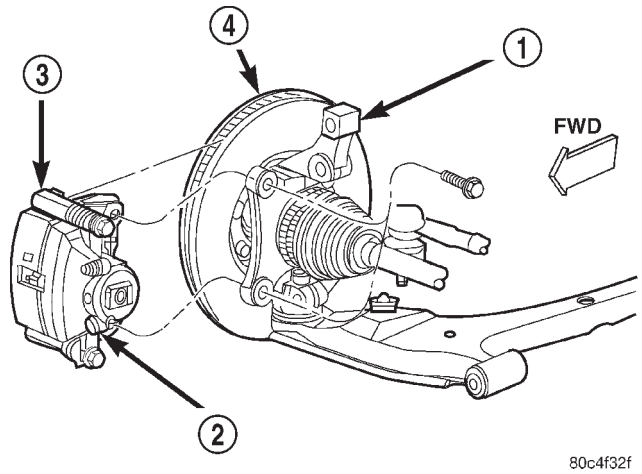

Fig. 67 Caliper/Adapter Mounting

1 – STEERING KNUCKLE
2 – DISC BRAKE CALIPER
3 – DISK BRAKE CALIPER ADAPTER
4 – BRAKE ROTOR

(6) Pump the brake pedal several times before moving the vehicle to set the shoes to the brake rotor.

(7) Road test the vehicle and make several stops to seat the brake shoes to the rotor.

DISC BRAKE CALIPER (REAR)

REMOVAL

(1) Using a brake pedal holding tool as shown (Fig. 68), depress the brake pedal past its first one inch of travel and hold it in this position. This will isolate the master cylinder from the brake hydraulic system and will not allow the brake fluid to drain out of the master cylinder reservoir while the lines are disconnected.

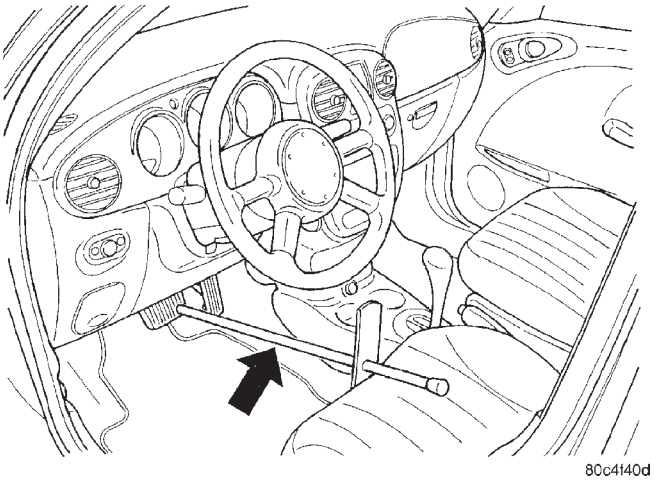

Fig. 68 Brake Pedal Holding Tool

(2) Raise the vehicle. Refer to HOISTING in the LUBRICATION AND MAINTENANCE group for the proper lifting procedure.

(3) Remove the rear tire and wheel assembly.

(4) Remove the banjo bolt connecting the brake hose to the brake caliper (Fig. 69). There are two washers (one on each side of the flex hose fitting) that will come off with the banjo bolt. Discard the washers.

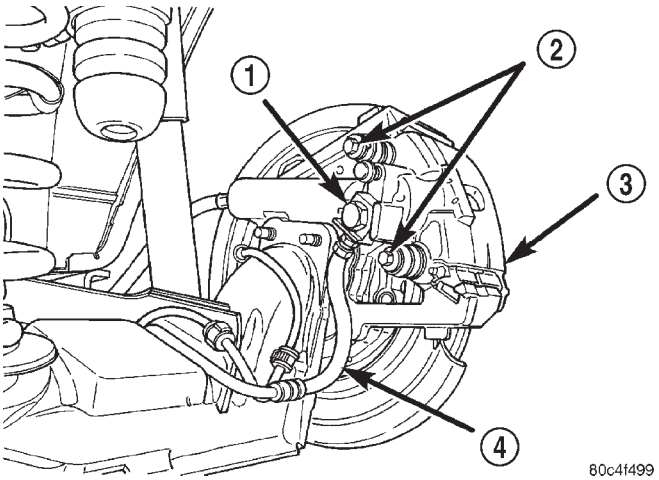

Fig. 69 Brake Hose Mounting

1 – BANJO BOLT
2 – GUIDE PIN BOLTS
3 – CALIPER
4 – BRAKE HOSE

(5) Remove the two caliper guide pin bolts (Fig. 70).

(6) Remove the caliper assembly from the brake adapter by first rotating the top of the caliper away from the rotor, and then lifting the caliper assembly off the machined abutment on the adapter (Fig. 71).

INSTALLATION

NOTE: Step (1) below is only required when installing the disc brake caliper after new brake shoes have been installed.

(1) Completely retract the caliper piston back into piston bore of the caliper.

(2) Lubricate both adapter caliper slide abutments with a liberal amount of Mopar® Multipurpose Lubricant, or an equivalent.

CAUTION: Use care when installing the caliper assembly onto adapter so the guide pin bushings and sleeves do not get damaged by the mounting bosses on adapter.

(3) Starting with the lower end, carefully lower the caliper and brake shoes over the brake rotor and

REMOVAL AND INSTALLATION (Continued)

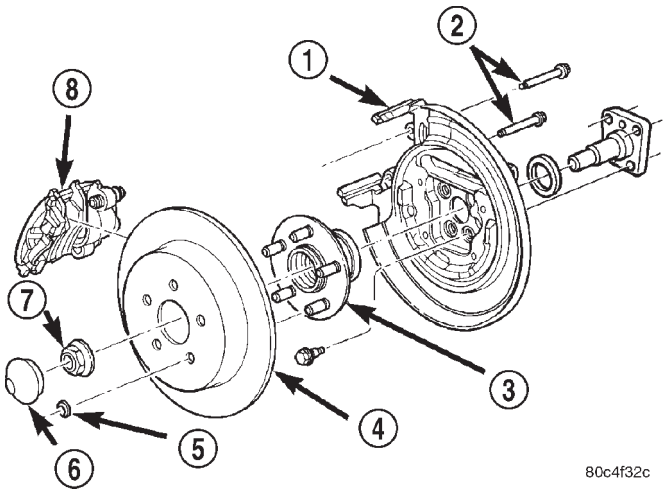

Fig. 70 Caliper Mounting

1 – DISC BRAKE ADAPTER
2 – GUIDE PIN BOLTS
3 – HUB AND BEARING
4 – BRAKE ROTOR
5 – RETAINER CLIP
6 – DUST CAP
7 – NUT
8 – DISC BRAKE CALIPER

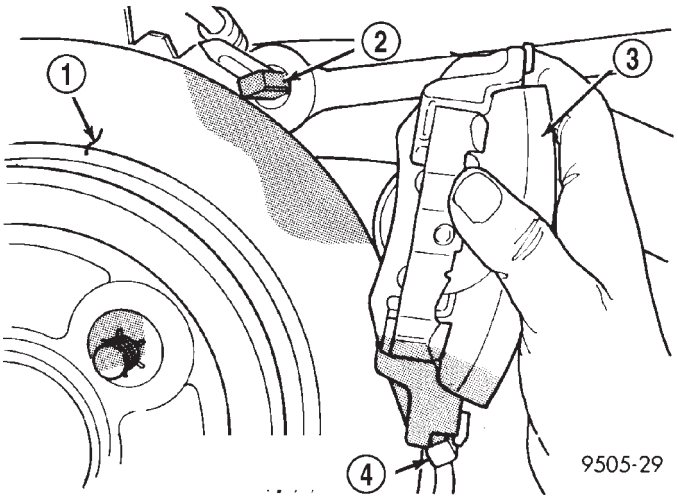

Fig. 71 Removing Caliper From Adapter

1 – BRAKING DISC
2 – CALIPER ADAPTER
3 – CALIPER
4 – LOWER MACHINED ADAPTER ABUTMENT

catch the caliper's bottom edge behind the caliper slide abutment (Fig. 71). Rotate the top of the caliper into mounting position on the adapter.

CAUTION: Extreme caution should be taken not to cross thread the caliper guide pin bolts when they are installed.

(4) Carefully install the caliper guide pin bolts (Fig. 70), then tighten them to a torque of 22 N·m (192 in. lbs.).

(5) Install the banjo bolt connecting the brake hose to the brake caliper (Fig. 69). Install NEW washers. Place one fitting washer on each side of the hose fitting as the banjo bolt is guided through the fitting. Thread the banjo bolt into the caliper and tighten it to a torque of 26 N·m (230 in. lbs.).

(6) Install the tire and wheel assembly. Tighten the wheel mounting nuts to a torque of 135 N·m (100 ft. lbs.).

(7) Lower the vehicle.

(8) Remove the brake pedal holding tool.

(9) Bleed the caliper as necessary. Refer to BASE BRAKE BLEEDING in the SERVICE PROCEDURES section in this service manual group.

(10) Road test the vehicle and make several stops to wear off any foreign material on the brakes and to seat the brake shoes.

DISC BRAKE SHOES (REAR)

REMOVAL

(1) Raise the vehicle. Refer to HOISTING in the LUBRICATION AND MAINTENANCE group for the proper lifting procedure.

(2) Remove both rear tire and wheel assemblies from vehicle.

(3) Begin on one side of the vehicle.

(4) Remove the two caliper guide pin bolts (Fig. 72).

(5) Remove the caliper assembly from the brake adapter by first rotating the top of the caliper away from the rotor, and then lifting the caliper assembly off the machined abutment on the adapter (Fig. 73).

(6) Hang the brake caliper from rear strut using wire or cord to prevent the weight of the caliper from damaging the brake hose (Fig. 74).

(7) Remove the outboard brake shoe from the caliper by prying the brake shoe retaining clip over the raised area on the caliper. Then slide the brake shoe down and off of the brake caliper (Fig. 75).

(8) Pull the inboard brake shoe away from caliper piston until the retaining clip is free from the cavity in the piston (Fig. 76).

(9) Repeat the above procedure to the rear brakes on the other side of the vehicle.

INSTALLATION

(1) Begin on one side of the vehicle.

(2) Completely retract the caliper piston back into piston bore of the caliper. This is required to gain the necessary shoe-to-rotor clearance for the caliper installation onto the steering knuckle.

REMOVAL AND INSTALLATION (Continued)

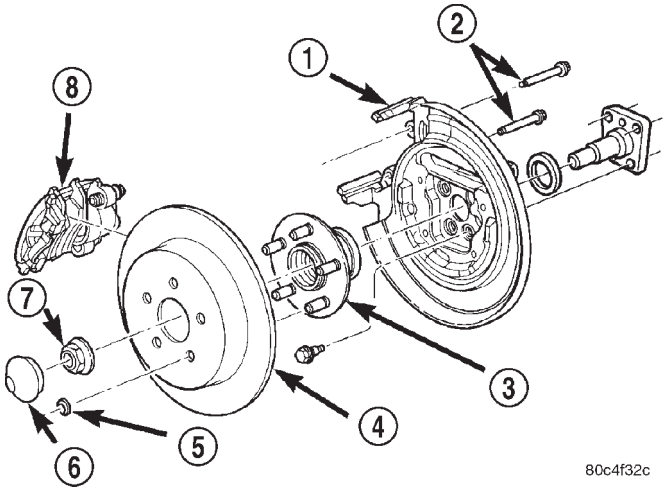

Fig. 72 Caliper And Rotor Mounting

1 – DISC BRAKE ADAPTER
2 – GUIDE PIN BOLTS
3 – HUB AND BEARING
4 – BRAKE ROTOR
5 – RETAINER CLIP
6 – DUST CAP
7 – NUT
8 – DISC BRAKE CALIPER

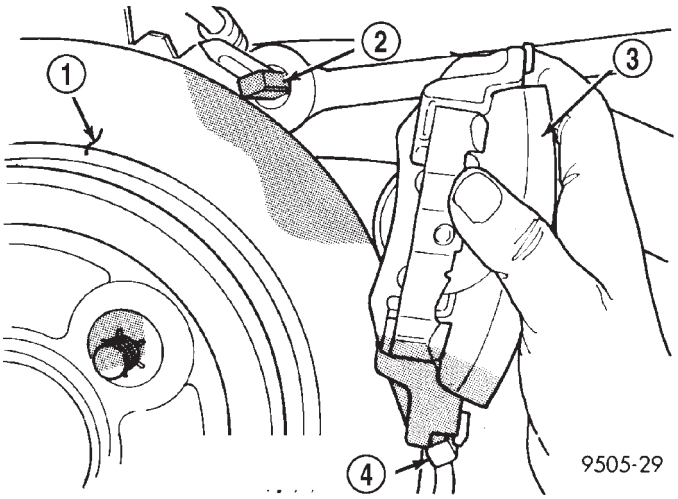

Fig. 73 Caliper Removal/Installation

1 – BRAKING DISC
2 – CALIPER ADAPTER
3 – CALIPER
4 – LOWER MACHINED ADAPTER ABUTMENT

(3) Install the inboard brake shoe into the caliper piston by firmly pressing the shoe in with the thumbs (Fig. 76). Be sure the inboard brake shoe is positioned squarely against the face of the caliper piston.

(4) Slide the outboard brake shoe onto the caliper assembly (Fig. 75). Be sure the retaining clip is squarely seated in the depressed areas on the caliper.

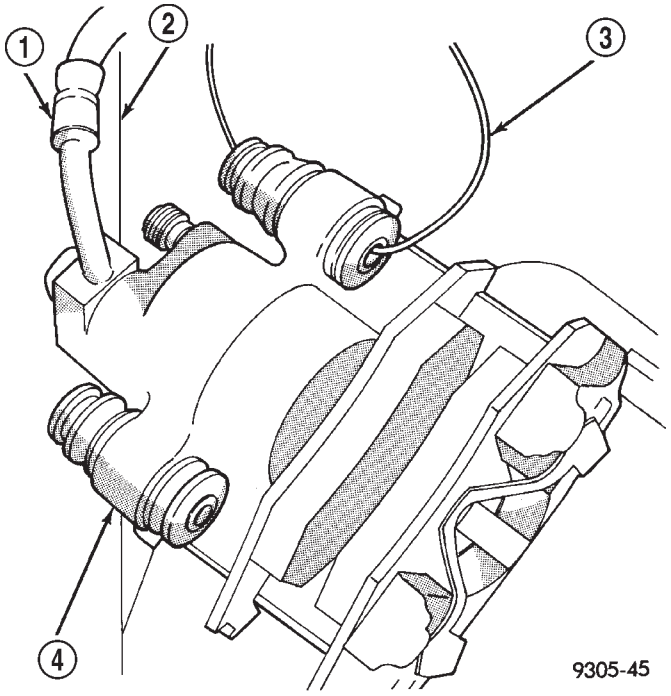

Fig. 74 Supporting Caliper

1 – FLEX HOSE
2 – STRUT
3 – WIRE HANGER
4 – CALIPER ASSEMBLY

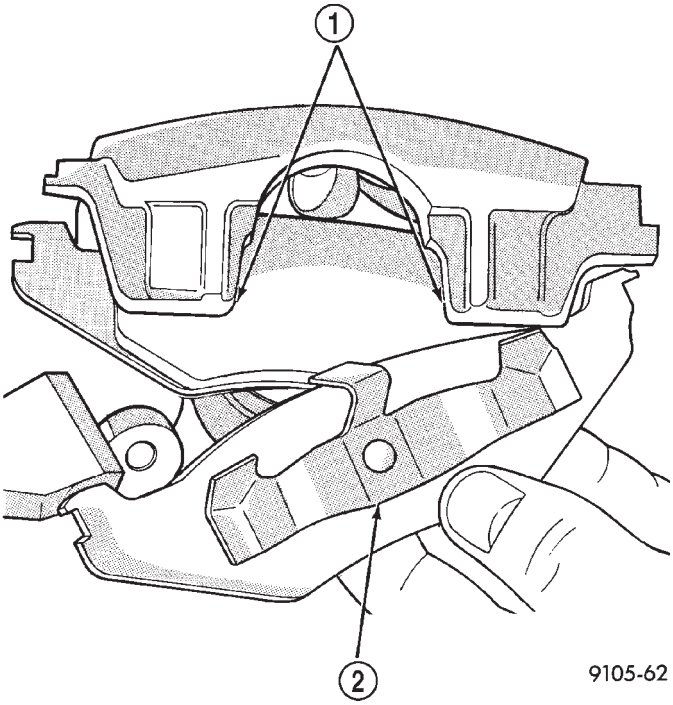

Fig. 75 Outboard Brake Shoe

1 – CALIPER FINGERS
2 – RETAINING CLIP

REMOVAL AND INSTALLATION (Continued)

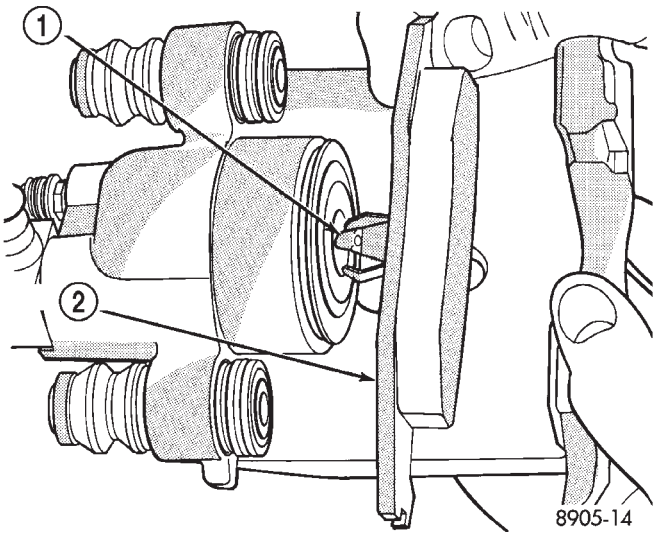

Fig. 76 Inboard Brake Shoe

1 – RETAINING CLIP
2 – INBOARD SHOE

(5) Lubricate both adapter caliper slide abutments with a liberal amount of Mopar® Multipurpose Lubricant, or an equivalent.

CAUTION: Use care when installing the caliper assembly onto adapter so the guide pin bushings and sleeves do not get damaged by the mounting bosses on adapter.

(6) Starting with the lower end, carefully lower the caliper and brake shoes over the brake rotor and catch the caliper's bottom edge behind the caliper slide abutment (Fig. 73). Rotate the top of the caliper into mounting position on the adapter.

CAUTION: Extreme caution should be taken not to cross thread the caliper guide pin bolts when they are installed.

(7) Carefully install the caliper guide pin bolts (Fig. 72), then tighten them to a torque of 22 N·m (192 in. lbs.).

(8) Install the tire and wheel assembly. Tighten the wheel mounting nuts to a torque of 135 N·m (100 ft. lbs.).

(9) Repeat the above procedure to the rear brakes on the other side of the vehicle.

(10) Lower the vehicle.

(11) Pump the brake pedal several times to ensure the vehicle has a firm brake pedal before moving the vehicle.

(12) Road test the vehicle and make several stops to wear off any foreign material on the brakes and to seat the brake shoes.

BRAKE ROTOR (REAR)

REMOVAL

(1) Raise the vehicle. Refer to HOISTING in the LUBRICATION AND MAINTENANCE group for the proper lifting procedure.

(2) Remove the rear tire and wheel assembly.

(3) Remove the rear disc brake caliper assembly from the brake rotor and store it out of the way. Refer to DISC BRAKE SHOES (REAR) in this REMOVAL AND INSTALLATION section of this service manual group.

(4) Remove any clips retaining the brake rotor (Fig. 72).

(5) Remove the brake rotor by pulling it straight off the wheel mounting studs.

INSTALLATION

NOTE: Inspect the disc brake shoes and parking brake shoes before brake rotor installation.

(1) Install the rear brake rotor over the wheel mounting studs and onto the hub (Fig. 72).

(2) Install rear disc brake caliper. Refer to DISC BRAKE SHOES (REAR) in this REMOVAL AND INSTALLATION section of this service manual group.

(3) Install the tire and wheel assembly. Tighten the wheel mounting nuts to a torque of 135 N·m (100 ft. lbs.).

(4) Adjust the parking brake shoes as necessary. Refer to ADJUSTMENTS in this section of this service manual group.

(5) Lower the vehicle.

(6) Pump the brake pedal before moving the vehicle to set the brake shoes to the brake rotor.

DRUM BRAKE WHEEL CYLINDER (REAR)

NOTE: Before proceeding with this procedure, review SERVICE WARNINGS AND CAUTIONS at the beginning of REMOVAL AND INSTALLATION in this section.

REMOVAL

(1) Using a brake pedal holder, depress the brake pedal past its first one inch of travel and hold it in this position (Fig. 77). This will isolate the master cylinder from the brake hydraulic system and will not allow the brake fluid to drain out of the master cylinder reservoir.

(2) Raise the vehicle. Refer to HOISTING in the LUBRICATION AND MAINTENANCE group for the proper lifting procedure.

(3) Remove the rear tire and wheel assembly.

REMOVAL AND INSTALLATION (Continued)

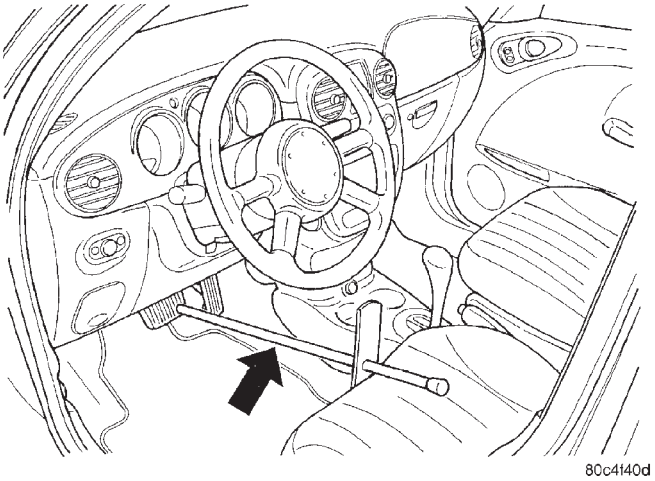

Fig. 77 Brake Pedal Holder

(4) Disconnect the rear brake flex hose from the wheel cylinder (Fig. 78).

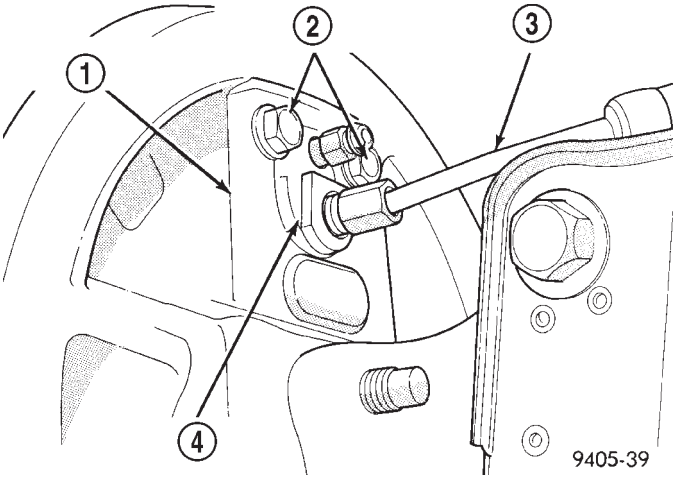

Fig. 78 Brake Hose And Wheel Cylinder Mounting

1 – BRAKE SUPPORT PLATE
2 – WHEEL CYLINDER ATTACHING BOLTS
3 – REAR BRAKE FLEX HOSE TUBE
4 – WHEEL CYLINDER ASSEMBLY

(5) Remove the rear brake drum (Fig. 79).

(6) Remove the rear brake shoes from the brake support plate. Refer to DRUM BRAKE SHOES in this REMOVAL AND INSTALLATION section.

NOTE: If the brake shoes are wet with grease or brake fluid, replace them.

(7) Remove the brake wheel cylinder attaching bolts (Fig. 78).

(8) Remove the brake wheel cylinder from the brake support plate.

(9) Remove old sealer from mounting surfaces.

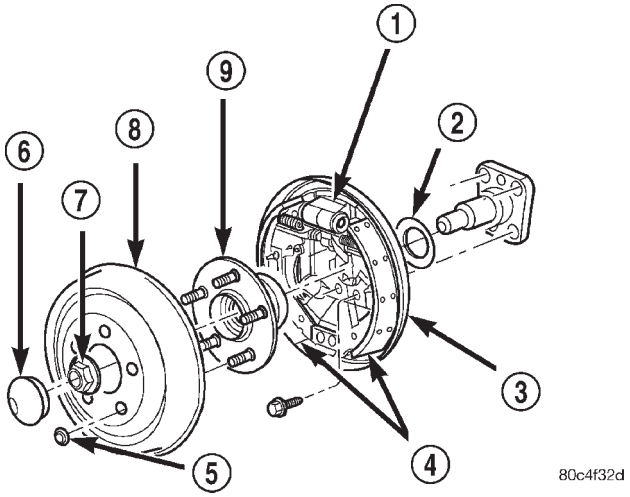

Fig. 79 Drum Brakes

1 – WHEEL CYLINDER
2 – SEAL
3 – SUPPORT PLATE
4 – BRAKE SHOES
5 – RETAINER CLIP
6 – DUST CAP
7 – NUT
8 – DRUM
9 – HUB AND BEARING

INSTALLATION

(1) Apply a bead of fresh Mopar® RTV sealer or equivalent around the mating surface of the wheel cylinder and brake support plate.

NOTE: Once sealer is applied, install the wheel cylinder within several minutes to avoid excessive hardening of the sealer before installation.

NOTE: When installing wheel cylinder on brake support plate, be sure it is positioned squarely (horizontal) to the brake assembly.

(2) Install the wheel cylinder onto brake support plate (Fig. 78). Tighten the attaching bolts to a torque of 13 N·m (115 in. lbs.).

(3) Hand start the rear brake flex hose tube fitting to wheel cylinder. Tighten the tube nut to a torque of 17 N·m (145 in. lbs.).

(4) Install the rear brake shoes on the brake support plate. Replace them as necessary.

(5) Adjust the rear brakes. Refer to ADJUSTMENTS in this section of this service manual group.

(6) Install the brake drum onto the rear hub.

(7) Install the tire and wheel assembly. Tighten the wheel mounting nuts to a torque of 135 N·m (100 ft. lbs.).

(8) Lower the vehicle.

(9) Remove the brake pedal holder.

REMOVAL AND INSTALLATION (Continued)

(10) Bleed the wheel cylinder as necessary. Refer to BASE BRAKE BLEEDING in the SERVICE PROCEDURES section in this service manual group.

(11) Road test the vehicle to make sure the brakes operate correctly.

DRUM BRAKE SHOES (REAR)

NOTE: Before proceeding with this removal and installation procedure, review the SERVICE WARNINGS AND CAUTIONS at the beginning of REMOVAL AND INSTALLATION in this section.

REMOVAL

(1) Raise the vehicle. Refer to HOISTING in the LUBRICATION AND MAINTENANCE group for the proper lifting procedure.

(2) Remove both rear tire and wheel assemblies from the vehicle.

(3) Begin on one side of the vehicle.

(4) Remove the brake drum retaining clips (if equipped) (Fig. 80).

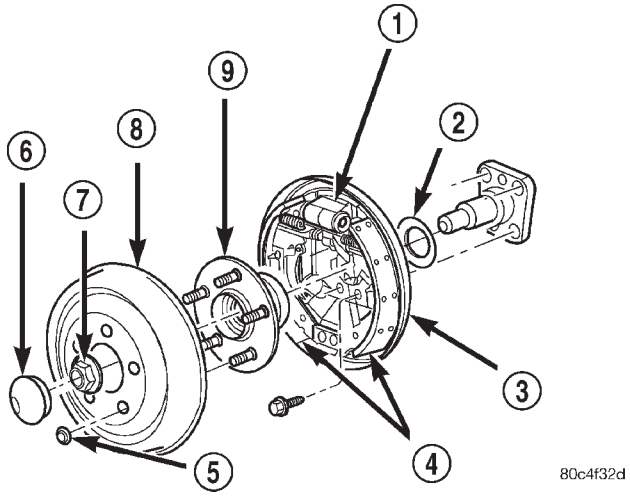

Fig. 80 Drum Brakes

1 – WHEEL CYLINDER
2 – SEAL
3 – SUPPORT PLATE
4 – BRAKE SHOES
5 – RETAINER CLIP
6 – DUST CAP
7 – NUT
8 – DRUM
9 – HUB AND BEARING

(5) Remove the brake drum (Fig. 80).

(6) Remove the automatic adjustment lever-to-brake shoe spring (Fig. 81).

(7) Remove the automatic adjustment lever (Fig. 82) from the brake shoe.

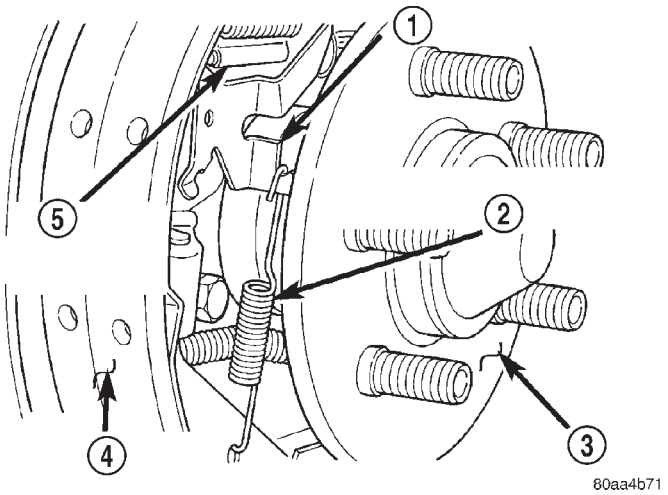

Fig. 81 Automatic Adjustment Lever Spring

1 – ADJUSTMENT LEVER
2 – ADJUSTMENT LEVER TO BRAKE SHOE SPRING
3 – HUB/BEARING
4 – LEADING BRAKE SHOE
5 – AUTOMATIC ADJUSTER SCREW

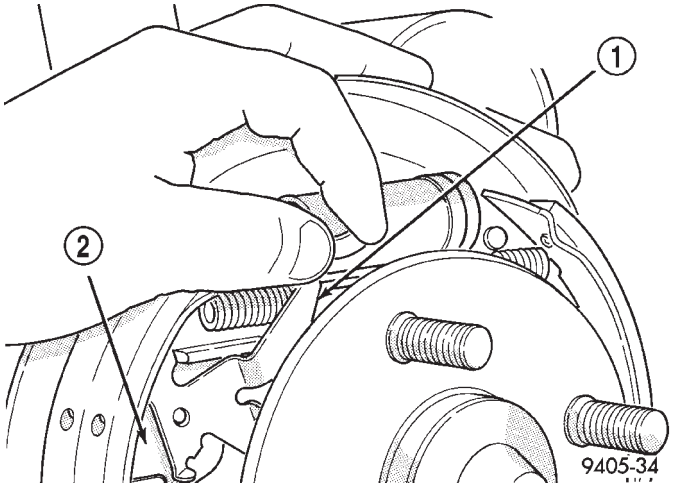

Fig. 82 Automatic Adjustment Lever

1 – AUTOMATIC ADJUSTMENT LEVER
2 – FRONT BRAKE SHOE ASSEMBLY

(8) Remove the hold down clips and pins attaching the leading and trailing brake shoes to the brake support plate (Fig. 83).

(9) Remove the lower brake shoe-to-shoe return spring (Fig. 84).

(10) Remove the parking brake lever pin-to-brake shoe retaining clip (Fig. 85).

(11) Remove the leading and trailing brake shoes, upper return spring and automatic adjuster screw from the brake support plate as an assembly (Fig. 86).

(12) Disassemble the shoes completely once on the bench.

REMOVAL AND INSTALLATION (Continued)

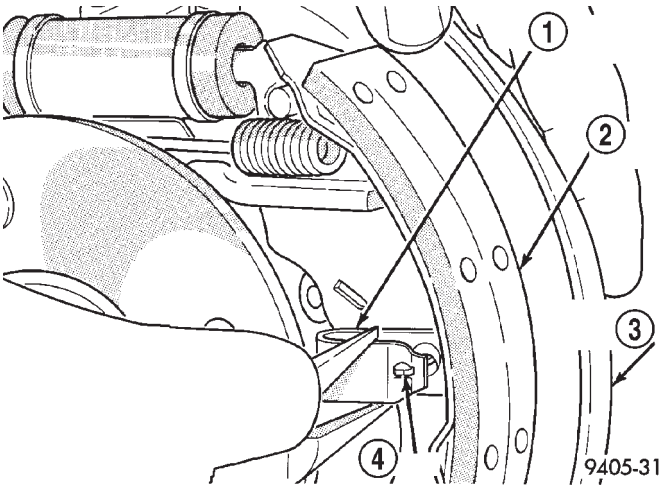

Fig. 83 Hold Down Clips And Pins

1 – HOLD DOWN CLIP
2 – BRAKE SHOE
3 – SUPPORT PLATE
4 – PIN

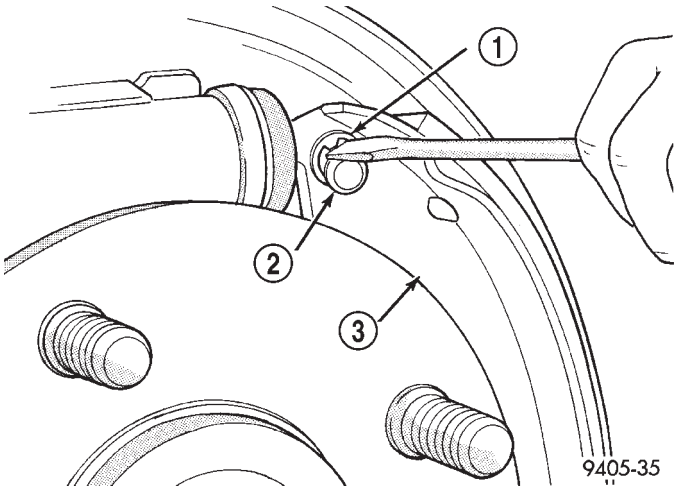

Fig. 85 Parking Brake Lever Pin To Brake Shoe Retaining Clip

1 – RETAINING CLIP
2 – PARK BRAKE LEVER PIN
3 – PARK BRAKE LEVER

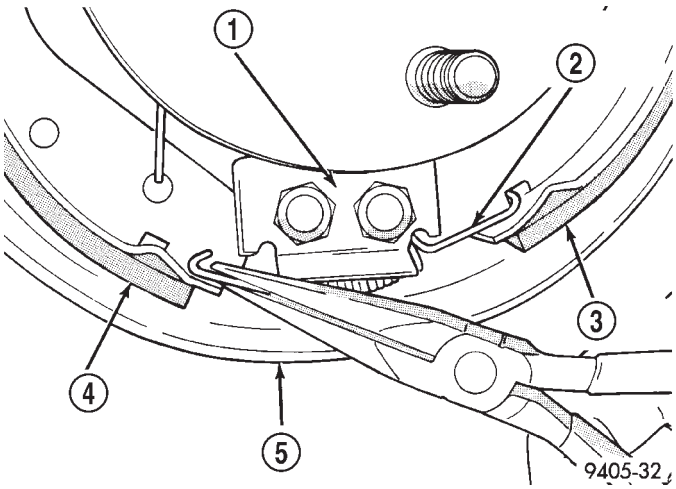

Fig. 84 Shoe-To-Shoe Return Spring

1 – ANCHOR PLATE
2 – LOWER BRAKE SHOE RETURN SPRING
3 – REAR BRAKE SHOE
4 – FRONT BRAKE SHOE
5 – BRAKE SUPPORT PLATE

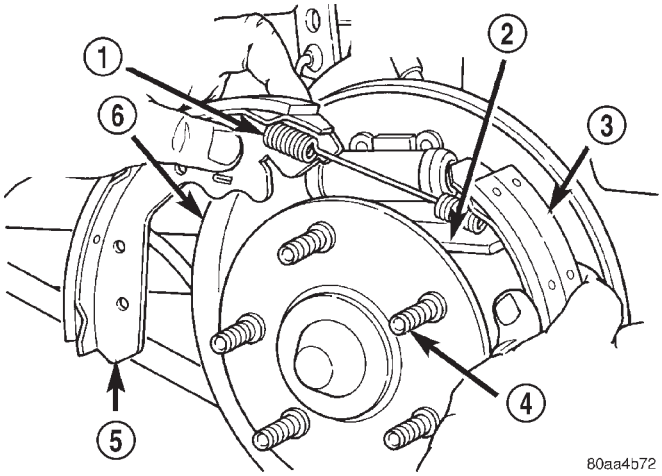

Fig. 86 Brake Shoe Removal/Installation

1 – UPPER RETURN SPRING
2 – AUTOMATIC ADJUSTER SCREW
3 – TRAILING BRAKE SHOE
4 – WHEEL MOUNTING STUDS
5 – LEADING BRAKE SHOE
6 – BRAKE SUPPORT PLATE

(13) Repeat the above procedure to the rear brakes on the other side of the vehicle (see following note).

NOTE: It may be easier to install the new components on this side before disassembling the other side. This allows the other side to be used as a reference guide.

INSTALLATION

(1) Begin on one side of the vehicle.

(2) Lubricate the eight shoe contact areas on the support plate and anchor using Mopar Multi-Purpose Lubricant or equivalent (Fig. 87).

(3) Assemble the front and rear brake shoe assembly, automatic adjuster screw, and upper return spring before installation on the vehicle.

(4) Install the pre-assembled brake shoes, automatic adjuster screw and upper return spring on the brake support plate (Fig. 86).

(5) Install the wave washer on the pin of park brake lever.

REMOVAL AND INSTALLATION (Continued)

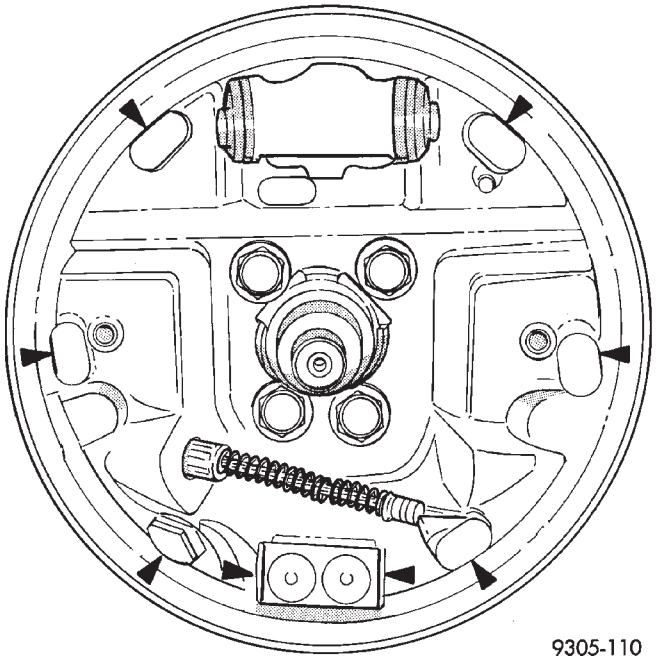

Fig. 87 Shoe Contact Areas on Support Plate

(6) Install the pin on the parking brake lever into hole in rear brake shoe assembly (Fig. 88).

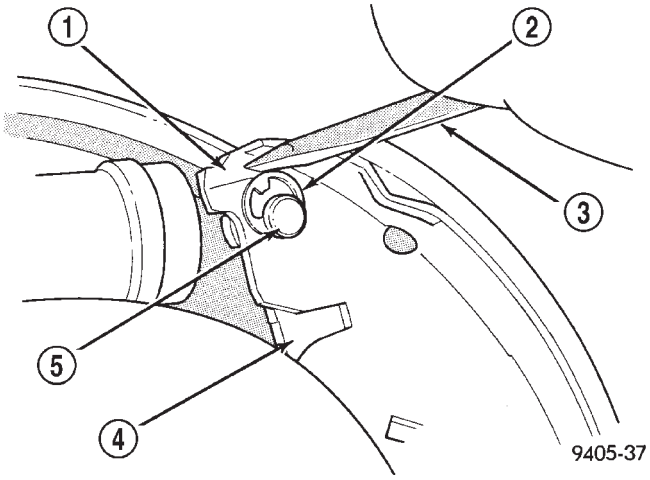

Fig. 88 Parking Brake Lever Pin Retaining Clip Installation

1 – BRAKE SHOE ASSEMBLY
2 – RETAINING CLIP
3 – SCREWDRIVER
4 – PARK BRAKE LEVER
5 – PARK BRAKE LEVER PIN

(7) Install both brake shoe-to-brake support plate hold down pins and clips (Fig. 83).

(8) Install the lower shoe-to-shoe plate return spring (Fig. 84). Do not overstretch the spring when installing.

(9) Install the automatic adjustment lever on the leading brake shoe (Fig. 82).

(10) Install the automatic adjustment lever-to-brake shoe spring (Fig. 81). Do not overstretch the spring when installing.

(11) Adjust the brake shoes to the drum diameter using a brake shoe gauge. Refer to ADJUSTMENTS in this section.

(12) Install the brake drum (Fig. 80).

(13) Repeat the above procedure to the rear brakes on the other side of the vehicle.

(14) Install the tire and wheel assemblies. Tighten the wheel mounting nuts to a torque of 135 N·m (100 ft. lbs.).

(15) Verify that the brake drum lightly drags on the shoes.

(16) Lower the vehicle.

(17) Road test vehicle stopping in both the forward and reverse directions. The automatic-adjuster will continue to adjust the brakes during the road test of the vehicle.

BRAKE DRUM (REAR)

REMOVAL

(1) Raise the vehicle. Refer to HOISTING in the LUBRICATION AND MAINTENANCE group for the proper lifting procedure.

(2) Remove the rear tire and wheel assembly from the vehicle.

(3) Remove the brake drum retaining clips (if equipped) (Fig. 89).

(4) Remove the brake drum (Fig. 89).

NOTE: If the drum does not come off, further brake clearance can be obtained by backing off the brake automatic adjuster screw. Remove the rubber plug from the top of brake support plate. Rotate the automatic adjuster screw in an upward motion, using a screwdriver.

INSTALLATION

NOTE: Before installing the drum, inspect the brake shoe linings for wear, shoe alignment, and contamination.

(1) Adjust the brake shoes to the drum diameter using a brake shoe gauge. Refer to ADJUSTMENTS in this section.

(2) Install the rear brake drum on rear hub and bearing (Fig. 89).

(3) Install the tire and wheel assembly. Tighten the wheel mounting nuts to a torque of 135 N·m (100 ft. lbs.).

(4) Lower the vehicle.

REMOVAL AND INSTALLATION (Continued)

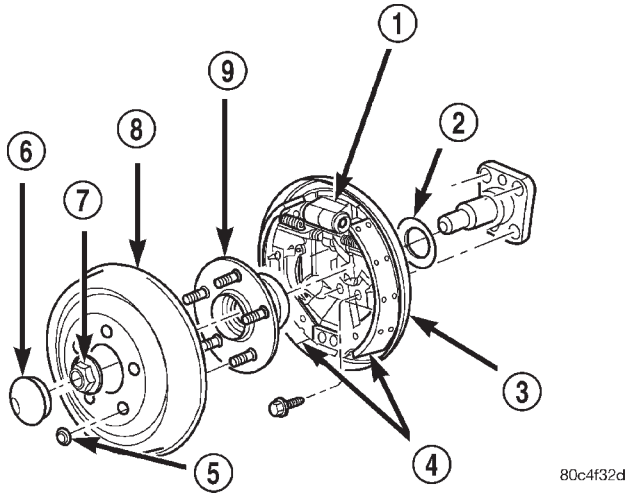

Fig. 89 Drum Brakes

1 – WHEEL CYLINDER
2 – SEAL
3 – SUPPORT PLATE
4 – BRAKE SHOES
5 – RETAINER CLIP
6 – DUST CAP
7 – NUT
8 – DRUM
9 – HUB AND BEARING

DRUM BRAKE SHOE SUPPORT PLATE (REAR)

NOTE: Before proceeding with this procedure, review SERVICE WARNINGS AND CAUTIONS at the beginning of REMOVAL AND INSTALLATION in this section.

REMOVAL

(1) Using a brake pedal holding tool as shown (Fig. 90), depress the brake pedal past its first one inch of travel and hold it in this position. This will isolate the master cylinder from the brake hydraulic system and will not allow the brake fluid to drain out of the master cylinder reservoir.

(2) Raise the vehicle. Refer to HOISTING in the LUBRICATION AND MAINTENANCE group for the proper lifting procedure.

(3) Remove the rear tire and wheel assembly.

(4) Disconnect the rear brake flex hose from the wheel cylinder (Fig. 91).

(5) Remove the rear brake drum (Fig. 92).

(6) Remove the dust cap from the rear hub and bearing (Fig. 92).

(7) Remove the nut holding the rear hub and bearing to the spindle (Fig. 92). Remove the hub and bearing from the spindle.

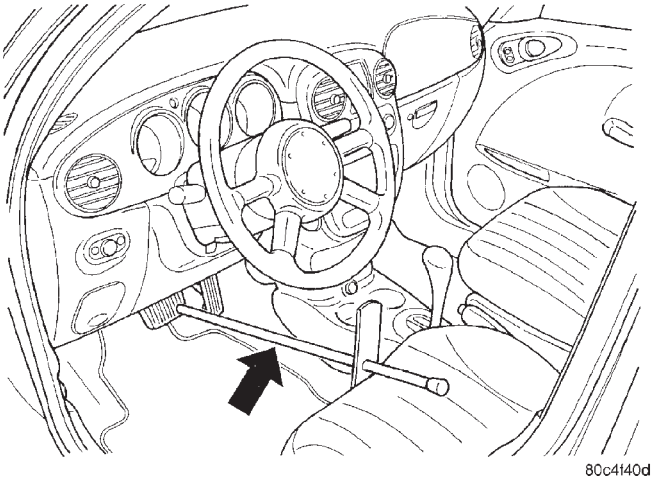

Fig. 90 Brake Pedal Holding Tool

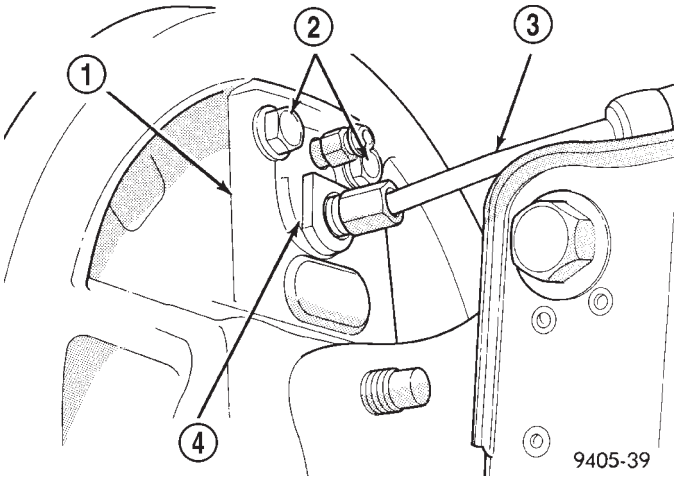

Fig. 91 Brake Flex Hose At Wheel Cylinder

1 – BRAKE SUPPORT PLATE
2 – WHEEL CYLINDER ATTACHING BOLTS
3 – REAR BRAKE FLEX HOSE TUBE
4 – WHEEL CYLINDER ASSEMBLY

(8) Remove the rear brake shoes from the brake support plate. Refer to DRUM BRAKE SHOES in this REMOVAL AND INSTALLATION section.

(9) Remove the parking brake actuator lever from the parking brake cable.

(10) Position a ½ inch wrench over the retainer fingers on the end of the parking brake cable (Fig. 93). Compress the cable housing retaining fingers with the wrench, then pull the cable housing out of the support plate. Remove the wrench as the parking brake cable retainer is freed from the mounting hole in the brake support plate.

(11) Remove the 4 brake support plate mounting bolts and washers. Separate brake support plate from spindle.

(12) Remove the brake wheel cylinder attaching bolts.

REMOVAL AND INSTALLATION (Continued)

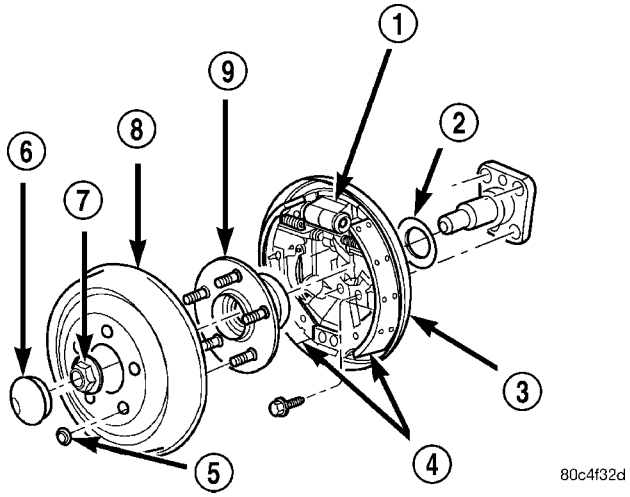

Fig. 92 Hub And Bearing/Rear Brakes

1 – WHEEL CYLINDER
2 – SEAL
3 – SUPPORT PLATE
4 – BRAKE SHOES
5 – RETAINER CLIP
6 – DUST CAP
7 – NUT
8 – DRUM
9 – HUB AND BEARING

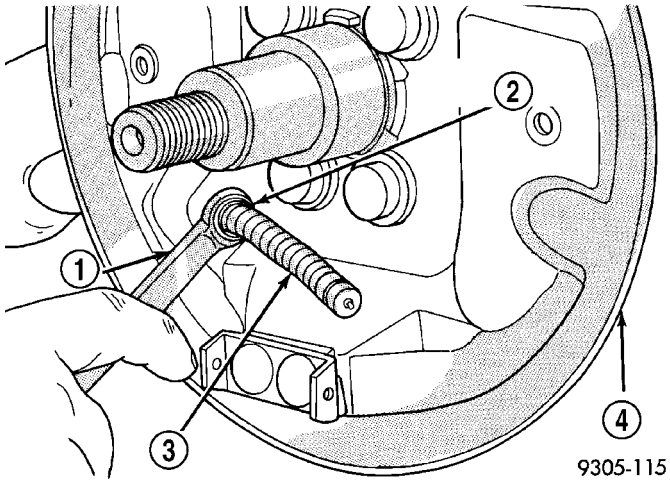

Fig. 93 Removing Park Brake Cable From Support Plate

1 – WRENCH
2 – CABLE HOUSING RETAINER
3 – PARK BRAKE CABLE
4 – SUPPORT PLATE

(13) Remove the brake wheel cylinder from the brake support plate.

(14) Remove old sealer from wheel cylinder mounting surfaces.

INSTALLATION

(1) Apply a bead of fresh Mopar® RTV sealer or equivalent around the mating surface of the wheel cylinder and brake support plate.

NOTE: Once sealer is applied, install the wheel cylinder within several minutes to avoid excessive hardening of the sealer before installation.

NOTE: When installing wheel cylinder on brake support plate, be sure it is positioned squarely (horizontal) to the brake support plate.

(2) Install the wheel cylinder onto brake support plate. Tighten the attaching bolts to a torque of 13 N·m (115 in. lbs.).

NOTE: When performing the following step, use new mounting bolts or clean and apply Mopar® Stud & Bearing Mount Adhesive or equivalent to the original mounting bolt threads before reuse.

(3) Install the brake support plate and seal on spindle. Tighten the support plate mounting bolts to a torque of 95 N·m (70 ft. lbs.).

(4) Insert the parking brake cable into its mounting hole in the brake support plate. Push the cable housing in until the retainer's fingers lock into place.

(5) Hand start the brake flex hose tube fitting to the wheel cylinder. Tighten the tube nut to a torque of 17 N·m (145 in. lbs.).

(6) Attach the parking brake cable to the parking brake actuator.

(7) Install the rear brake shoe assemblies on the brake support plate.

(8) Install the rear hub and bearing assembly on the spindle. Install a new hub and bearing retaining nut (Fig. 92). Tighten the retaining nut to a torque of 217 N·m (160 ft. lbs.). Install dust cap.

(9) Adjust the brake shoes to the drum diameter using a brake shoe gauge. Refer to ADJUSTMENTS in this section.

(10) Install the brake drum (Fig. 92).

(11) Install the wheel and tire assembly. Tighten the wheel mounting nuts to a torque of 135 N·m (100 ft. lbs.).

(12) Lower the vehicle.

(13) Remove the brake pedal holding tool.

(14) Bleed the affected wheel cylinder as necessary. Refer to BASE BRAKE BLEEDING in the SERVICE PROCEDURES section in this service manual group.

(15) Road test the vehicle to make sure the brakes operate correctly.

REMOVAL AND INSTALLATION (Continued)

PARKING BRAKE LEVER

WARNING: THE AUTOMATIC ADJUSTING FEATURE OF THIS PARKING BRAKE LEVER CONTAINS A CLOCK SPRING LOADED TO APPROXIMATELY 19 POUNDS. DO NOT RELEASE THE AUTOMATIC ADJUSTER LOCKOUT DEVICE UNLESS THE REAR PARKING BRAKE CABLES AND EQUALIZER ARE CONNECTED TO THE LEVER OUTPUT CABLE. KEEP HANDS OUT OF AUTOMATIC ADJUSTER SECTOR AND PAWL AREA. FAILURE TO OBSERVE CAUTION IN HANDLING THIS MECHANISM COULD LEAD TO SERIOUS INJURY.

WARNING: WHEN REPAIRS TO THE PARKING BRAKE LEVER OR CABLES ARE REQUIRED, THE AUTOMATIC ADJUSTER MUST BE LOADED AND LOCKED OUT TO AVOID POSSIBLE INJURY. THE LEVER ADJUSTMENT MECHANISM CAN BE LOADED AND LOCKED OUT AS OUTLINED IN THIS PROCEDURE.

WARNING: THE AIRBAG SYSTEM IS A COMPLEX ELECTROMECHANICAL UNIT. BEFORE ATTEMPTING TO SERVICE ANY COMPONENT NEAR THE OCCUPANT RESTRAINT CONTROLLER (ORC), FIRST DISCONNECT AND ISOLATE THE BATTERY NEGATIVE CABLE. ALLOW THE SYSTEM CAPACITOR TO DISCHARGE FOR TWO (2) MINUTES. FAILURE TO DO THIS COULD RESULT IN ACCIDENTAL AIRBAG DEPLOYMENT AND POSSIBLE PERSONAL INJURY.

REMOVAL

(1) Unclip the air cleaner cover (two clips) and move the cover aside.

(2) Disconnect and isolate the battery negative cable from its post on the battery.

(3) Block the tire and wheels so the vehicle does not move once the vehicle parking brake lever is released.

(4) Remove the transmission shift knob as necessary.

(5) Remove the screws attaching the center console, then remove the center console.

(6) Grasp the parking brake lever output cable by hand and pull upward. Continue pulling on the cable until an appropriate sized pin punch (drill bit or locking pin) can be inserted sufficiently through the hole in the left side of the lever mounting bracket (Fig. 94). This will lock the parking brake automatic adjustment mechanism in place and take tension off the parking brake cables. Slowly release the output cable. There should now be slack in the cables.

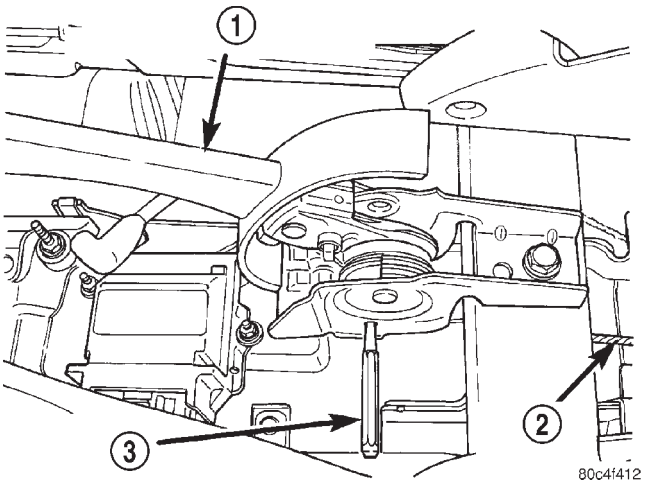

Fig. 94 Pin Punch Installed

1 – PARKING BRAKE LEVER
2 – OUTPUT CABLE
3 – PIN PUNCH

(7) Remove both rear parking brake cables from the parking brake cable equalizer (Fig. 95).

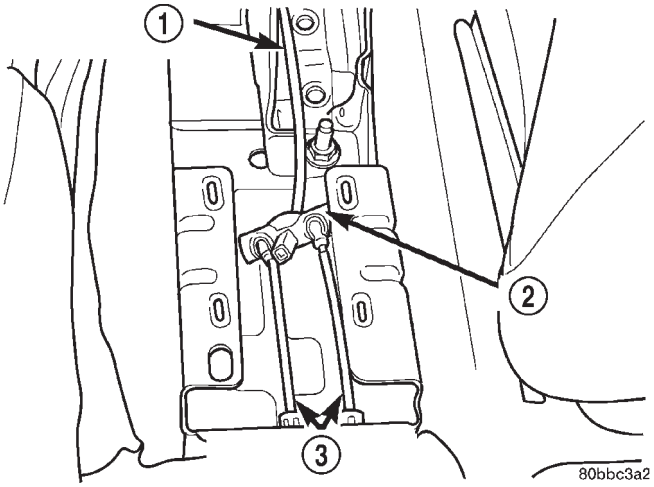

Fig. 95 Parking Brake Cables At Equalizer

1 – LEVER OUTPUT CABLE
2 – EQUALIZER
3 – REAR PARKING BRAKE CABLES

(8) Remove the wiring harness electrical connector from the parking brake warning switch on the right side of the parking brake lever.

(9) Remove the screw and the nut attaching the parking brake lever to the vehicle (Fig. 96).

(10) Remove the parking brake lever from the vehicle.

INSTALLATION

(1) Place the parking brake lever on the mounting studs on the vehicle floor. Install and tighten the

REMOVAL AND INSTALLATION (Continued)

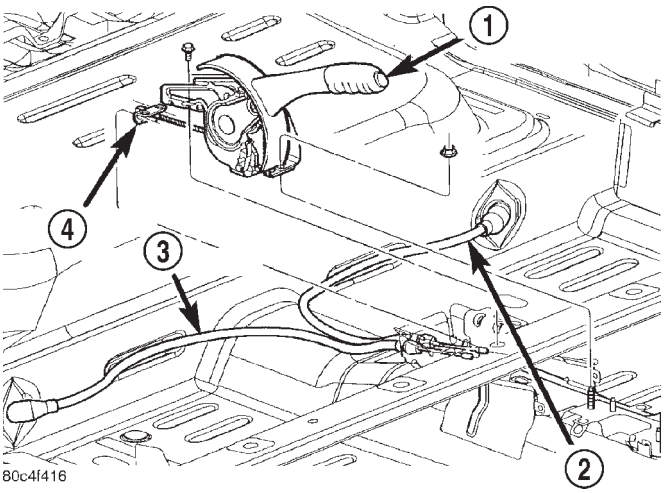

Fig. 96 Parking Brake Lever

1 – PARKING BRAKE LEVER
2 – LEFT CABLE
3 – RIGHT CABLE
4 – EQUALIZER

screw and the nut to a torque of 28 N·m (250 in. lbs.) (Fig. 96).

(2) Connect the wiring harness electrical connector on the parking brake warning switch.

(3) Install both rear park brake cables into the equalizer on the parking brake lever output cable (Fig. 95).

(4) Ensure that the parking brake cables are correctly installed on the equalizer and aligned with the cable track on the parking brake lever.

NOTE: The parking brake lever can only be in the released position when releasing the automatic adjuster.

(5) Keeping your hands clear of the automatic adjuster sector and pawl area, firmly grasp the parking brake lever pin punch (drill bit or locking pin if a new mechanism has been installed) (Fig. 94), then quickly remove it from the parking brake lever mechanism. This will allow the park brake lever mechanism to automatically adjust the parking brake cables.

(6) Cycle the parking brake lever once to position the parking brake cables, then return the parking brake lever its released position.

(7) Check the rear wheels of the vehicle. They should rotate freely without dragging with the lever in its released position.

(8) Install the center console and its mounting screws.

(9) Apply the parking brake.

(10) Remove the blocks from the tires and wheels.

(11) Reconnect the battery negative terminal.

(12) Reinstall the air cleaner cover (two clips).

PARKING BRAKE CABLE

WARNING: THE AUTOMATIC ADJUSTING FEATURE OF THIS PARKING BRAKE LEVER CONTAINS A CLOCK SPRING LOADED TO APPROXIMATELY 19 POUNDS. DO NOT RELEASE THE AUTOMATIC ADJUSTER LOCKOUT DEVICE UNLESS THE REAR PARKING BRAKE CABLES AND EQUALIZER ARE CONNECTED TO THE LEVER OUTPUT CABLE. KEEP HANDS OUT OF AUTOMATIC ADJUSTER SECTOR AND PAWL AREA. FAILURE TO OBSERVE CAUTION IN HANDLING THIS MECHANISM COULD LEAD TO SERIOUS INJURY.

WARNING: WHEN REPAIRS TO THE PARKING BRAKE LEVER OR CABLES ARE REQUIRED, THE AUTOMATIC ADJUSTER MUST BE LOADED AND LOCKED OUT TO AVOID POSSIBLE INJURY. THE LEVER ADJUSTMENT MECHANISM CAN BE LOADED AND LOCKED OUT AS OUTLINED IN THIS PROCEDURE.

WARNING: THE AIRBAG SYSTEM IS A COMPLEX ELECTROMECHANICAL UNIT. BEFORE ATTEMPTING TO SERVICE ANY COMPONENT NEAR THE OCCUPANT RESTRAINT CONTROLLER (ORC), FIRST DISCONNECT AND ISOLATE THE BATTERY NEGATIVE CABLE. ALLOW THE SYSTEM CAPACITOR TO DISCHARGE FOR TWO (2) MINUTES. FAILURE TO DO THIS COULD RESULT IN ACCIDENTAL AIRBAG DEPLOYMENT AND POSSIBLE PERSONAL INJURY.

NOTE: Before proceeding with this procedure, review SERVICE WARNINGS AND CAUTIONS at the beginning of REMOVAL AND INSTALLATION in this section.

NOTE: The procedure below applies to either of the two rear parking brake cables.

REMOVAL

(1) Unclip the air cleaner cover (two clips) and move the cover aside.

(2) Disconnect and isolate the battery negative cable from its post on the battery.

(3) Block the tire and wheels so the vehicle does not move once the vehicle parking brake lever is released.

(4) Remove the transmission shift knob as necessary.

REMOVAL AND INSTALLATION (Continued)

(5) Remove the screws attaching the center console, then remove the center console.

(6) Grasp the parking brake lever output cable by hand and pull upward. Continue pulling on the cable until an appropriate sized pin punch (drill bit or locking pin) can be inserted sufficiently through the hole in the left side of the lever mounting bracket (Fig. 97). This will lock the parking brake automatic adjustment mechanism in place and take tension off the parking brake cables. Slowly release the output cable. There should now be slack in the cables.

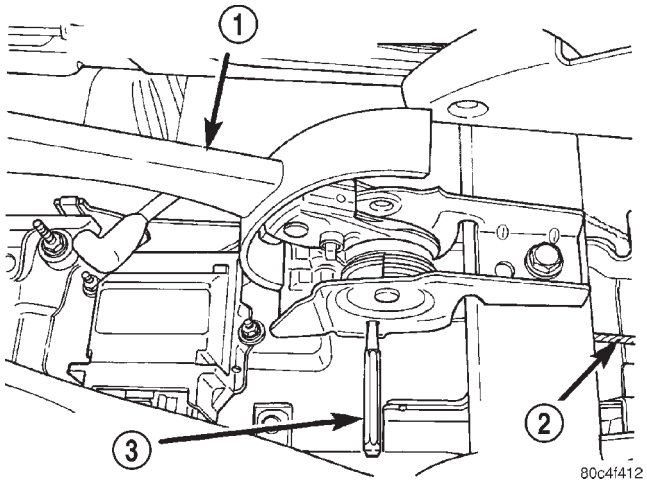

Fig. 97 Pin Punch Installed

1 – PARKING BRAKE LEVER
2 – OUTPUT CABLE
3 – PIN PUNCH

(7) Remove the rear parking brake cables from the parking brake cable equalizer (Fig. 98).

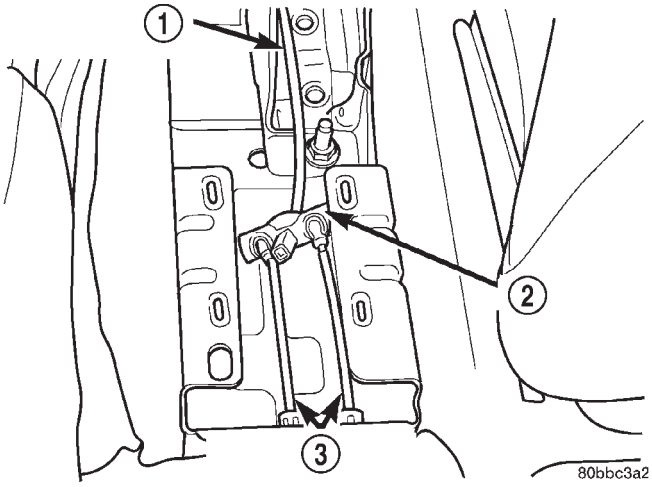

Fig. 98 Parking Brake Cables At Equalizer

1 – LEVER OUTPUT CABLE
2 – EQUALIZER
3 – REAR PARKING BRAKE CABLES

(8) Remove the rear seat cushion from the vehicle.

(9) Fold the rear carpeting forward to expose the parking brake cables at the end of the rear floor.

(10) Install the box end of a ½ inch wrench over the parking brake cable retainer (Fig. 99). Push the wrench onto the retainer until the retainer fingers are collapsed. From under the carpeting, grasp the parking brake cable housing and pull cable straight out of the bracket attached to the floor.

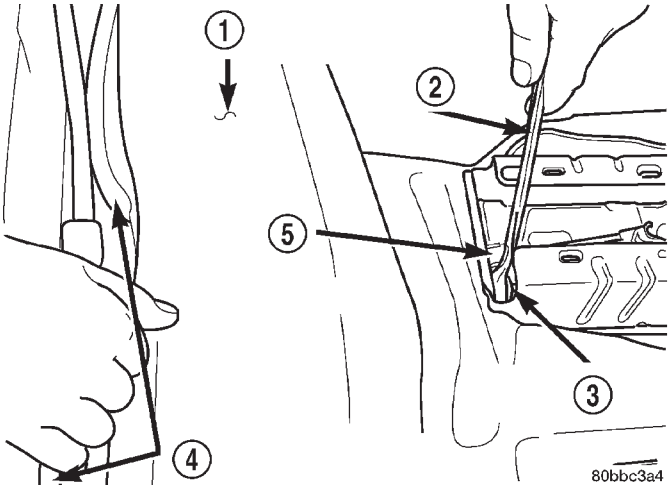

Fig. 99 Compressing Cable Retainer

1 – CARPET ROLLED FORWARD
2 – WRENCH
3 – RIGHT REAR CABLE
4 – REAR PARKING BRAKE CABLES
5 – LEFT REAR CABLE

(11) Raise the vehicle. Refer to HOISTING in the LUBRICATION AND MAINTENANCE group for the proper lifting procedure.

(12) Remove the rear tire and wheel assembly from the vehicle.

(13) On vehicles equipped with rear drum brakes, remove the brake drum. Refer to BRAKE DRUM in this section.

(14) On vehicles equipped with rear disc brakes:

- Remove the disc brake caliper guide pin bolts, then the caliper from the disc brake adapter (Fig. 100).
- Hang the caliper out of the way using a wire hanger or cord.
- Remove the brake rotor from the rear hub and bearing.

(15) Remove the dust cap from the rear hub and bearing.

(16) Remove the hub and bearing retaining nut from the knuckle spindle, then remove the hub and bearing (Fig. 100).

(17) On vehicles equipped with rear disc brakes, remove the upper return spring, both shoe hold-down clips, then spread the rear parking brake shoes apart

REMOVAL AND INSTALLATION (Continued)

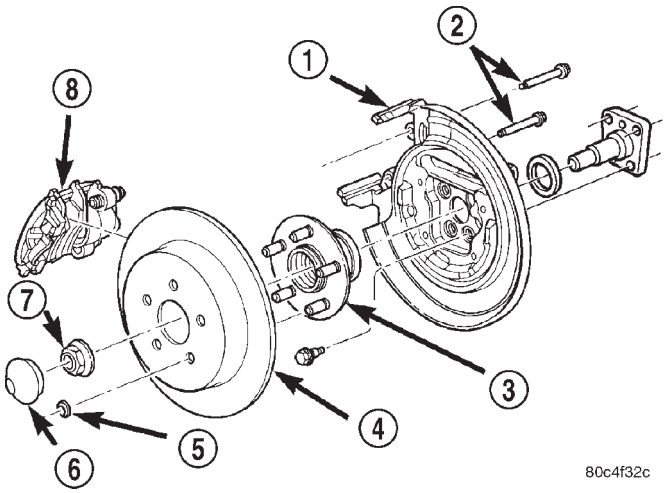

Fig. 100 Rear Disc Brakes

1 – DISC BRAKE ADAPTER
2 – GUIDE PIN BOLTS
3 – HUB AND BEARING
4 – BRAKE ROTOR
5 – RETAINER CLIP
6 – DUST CAP
7 – NUT
8 – DISC BRAKE CALIPER

at the top enough to clear the shoe anchor and remove the parking brake shoes as an assembly from the disc brake adapter (Fig. 101).

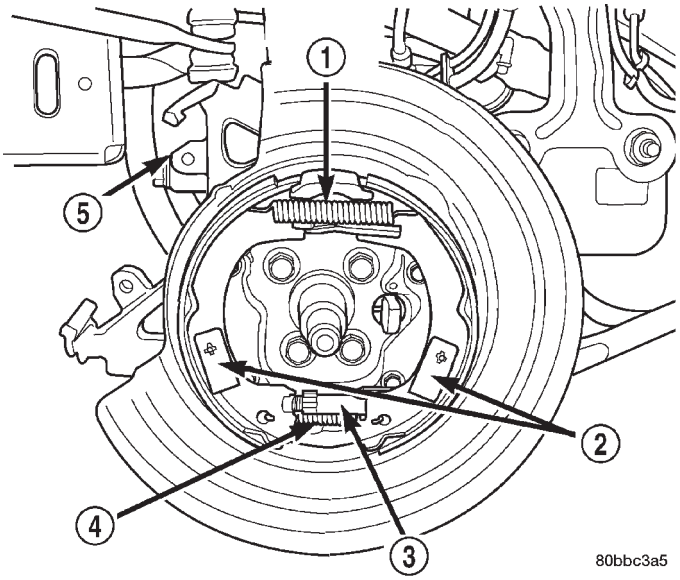

Fig. 101 Parking Brake Shoes

1 – UPPER RETURN SPRING
2 – SHOE HOLD DOWN CLIPS
3 – ADJUSTER
4 – LOWER REAR SPRING
5 – DISC BRAKE ADAPTER

(18) To remove the rear parking brake cable from the brake support plate on vehicles equipped with rear drum brakes:

- Remove the parking brake cable from the parking brake actuating lever (Fig. 102).
- Remove the actuating spring between the brake shoe adjustment lever and the brake shoe (Fig. 103).
- Remove the parking brake cable from the rear brake support plate. The parking brake cable can be removed from brake support plate using a ½ inch box wrench to compress the locking fingers on the parking brake cable retainer (Fig. 104).

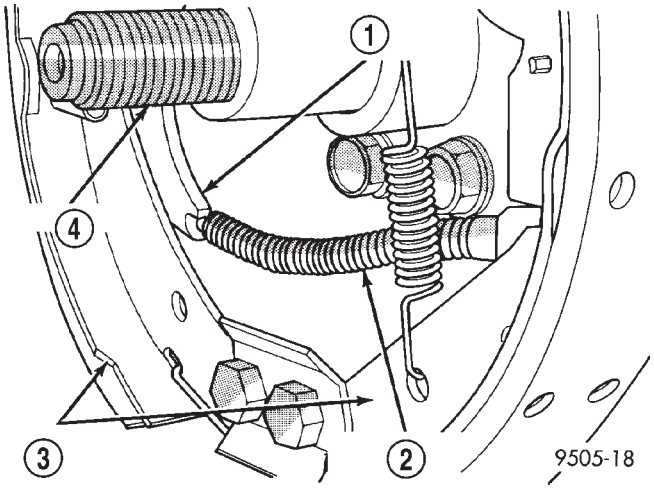

Fig. 102 Actuator Lever

1 – PARK BRAKE ACTUATING LEVER
2 – PARK BRAKE CABLE
3 – BRAKE SHOE ASSEMBLIES
4 – REAR SPINDLE

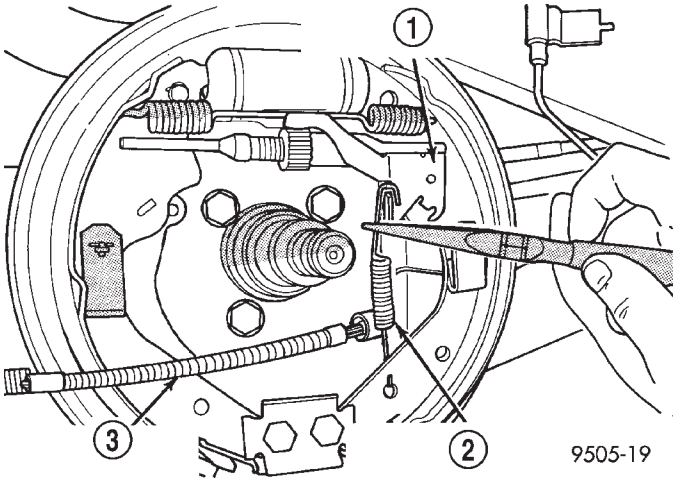

Fig. 103 Actuating Spring

1 – BRAKE SHOE ADJUSTMENT LEVER
2 – ADJUSTMENT LEVER ACTUATING SPRING
3 – PARK BRAKE CABLE

REMOVAL AND INSTALLATION (Continued)

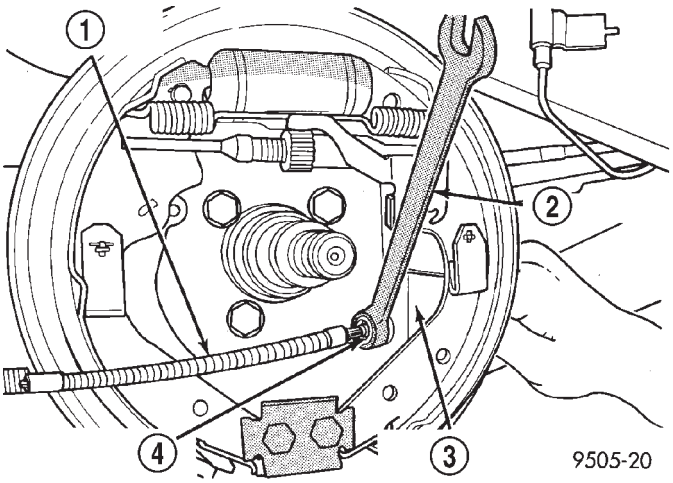

Fig. 104 Parking Brake Cable Removal

1 – PARK BRAKE CABLE
2 – 1/2′′ WRENCH
3 – REAR BRAKE SUPPORT PLATE
4 – PARK BRAKE CABLE RETAINER

(19) To remove the rear parking brake cable from the disc brake adapter on vehicles equipped with rear disc brakes:

- Remove the parking brake actuating lever from the parking brake cable (Fig. 105).
- Remove the parking brake cable from the rear disc brake adapter. The parking brake cable can be removed from the disc brake adapter using a ½ inch offset box wrench to compress the locking fingers on the parking brake cable retainer (Fig. 106).

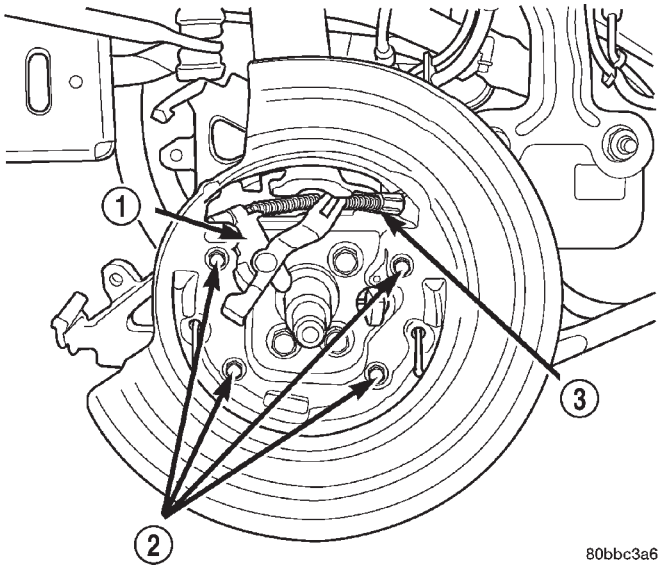

Fig. 105 Parking Brake Actuator Lever

1 – SHOE ACTUATOR LEVER
2 – SHIELD MOUNTING SCREWS
3 – REAR PARKING BRAKE CABLE

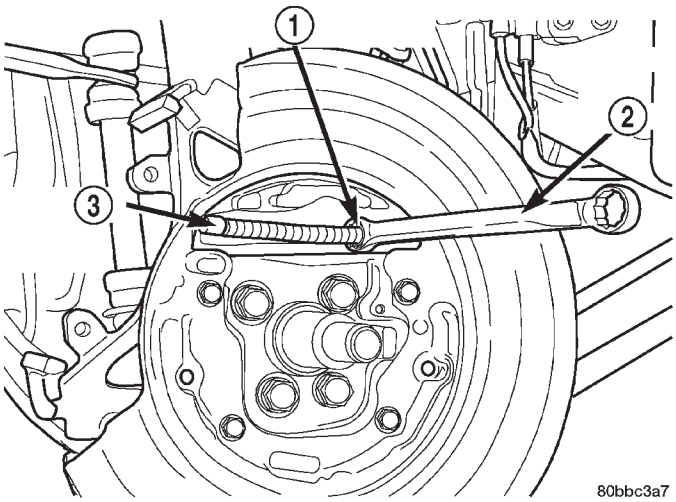

Fig. 106 Parking Brake Cable Removal

1 – CABLE RETAINER
2 – OFFSET BOX WRENCH
3 – PARKING BRAKE CABLE

(20) Remove the two fasteners securing the cable and routing brackets to the axle trailing arm (Fig. 107).

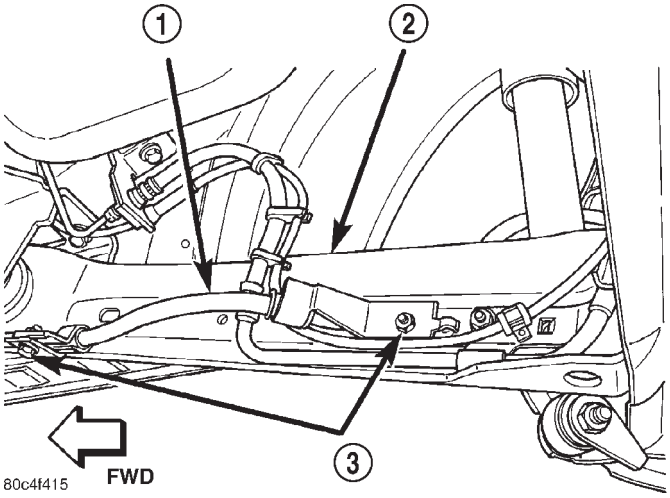

Fig. 107 Cable Routing Bracket Fasteners

1 – CABLE
2 – ARM
3 – FASTENERS

(21) Pull cable through hole in trailing arm.

(22) Remove the parking brake cable and sealing grommet from floor pan of the vehicle.

INSTALLATION

(1) From underneath, push the parking brake cable through the hole in the floor pan of the vehicle making sure the cable sealing grommet is installed in the floor pan as far as possible to ensure a good seal.

REMOVAL AND INSTALLATION (Continued)

(2) Guide the other end of the cable through the hole in the axle trailing arm.

(3) Align the cable routing brackets with their mounts on the trailing arm. Install the two fasteners securing the cable and routing brackets to the trailing arm (Fig. 107). Install and tighten the mounting bolts to a torque of 11 N·m (100 in. lbs.).

(4) Install the parking brake cable into the brake support plate or the rear disc brake adapter. Be sure the locking fingers on the cable retainer are expanded once the cable is pushed all the way into the support plate or brake adapter hole to ensure the cable is securely held in place.

(5) On vehicles equipped with rear drum brakes:

- Install the parking brake cable on the parking brake cable actuating lever (Fig. 102).
- Install the actuating spring to the brake shoe and the brake adjustment lever (Fig. 103).

(6) On vehicles equipped with rear disc brakes:

- Install the parking brake shoes actuator lever on the parking brake cable (Fig. 105).
- Install the parking brake shoe assemblies on the disc brake adapter (Fig. 101).

(7) Install the hub and bearing on the rear spindle. Install a new hub and bearing retaining nut. Tighten the retaining nut to a torque of 217 N·m (160 ft. lbs.).

(8) Install the hub and bearing dust cap.

(9) On drum brake equipped vehicles, install the rear brake drum.

(10) On vehicles equipped with rear disc brakes, install the brake rotor, then the disc brake caliper (Fig. 100). Install the two caliper guide pin bolts, then tighten them to a torque of 22 N·m (192 in. lbs.).

(11) Install the rear tire and wheel assembly. Tighten all wheel nuts to a torque of 135 N·m (100 ft. lbs.).

(12) Lower the vehicle.

(13) Ensure that the seal grommet on the cable that was installed from underneath is fully seated into the floor pan.

(14) Route the parking brake cable under the carpeting, up to parking brake cable retaining bracket on floor pan. Install the parking brake cable through the retaining bracket. Push the cable in until the locking fingers on the cable retainer lock the cable into place.

(15) Install the rear parking brake cables into the equalizer on the parking brake lever output cable (Fig. 98).

(16) Ensure that the parking brake cables are correctly installed on the equalizer and aligned with the cable track on the parking brake lever.

NOTE: The parking brake lever can only be in the released position when releasing the automatic adjuster.

(17) Keeping your hands clear of the automatic adjuster sector and pawl area, firmly grasp the parking brake lever pin punch (drill bit or locking pin if a new mechanism has been installed) (Fig. 97), then quickly remove it from the parking brake lever mechanism. This will allow the park brake lever mechanism to automatically adjust the parking brake cables.

(18) Cycle the parking brake lever once to position the parking brake cables, then return the parking brake lever its released position.

(19) Check the rear wheels of the vehicle. They should rotate freely without dragging with the lever in its released position.

(20) Install the center console and its mounting screws.

(21) Apply the parking brake.

(22) Remove the blocks from the tires and wheels.

(23) Reconnect the battery negative terminal.

(24) Reinstall the air cleaner cover (two clips).

PARKING BRAKE SHOES (REAR DISC BRAKE)

NOTE: Before proceeding with this procedure, review SERVICE WARNINGS AND CAUTIONS at the beginning of REMOVAL AND INSTALLATION in this section.

REMOVAL

(1) Raise the vehicle. Refer to HOISTING in the LUBRICATION AND MAINTENANCE group for the proper lifting procedure.

(2) Remove the rear tire and wheel assembly.

(3) Remove the rear disc brake caliper assembly from the brake rotor and store it out of the way. Refer to DISC BRAKE SHOES (REAR) in this REMOVAL AND INSTALLATION section of this service manual group.

(4) Remove rear brake rotor.

(5) Remove the dust cap from the rear hub and bearing.

(6) Remove the rear hub and bearing assembly retaining nut and washer.

(7) Remove the rear hub and bearing assembly from the rear spindle.

(8) Remove the rear brake shoe assembly hold-down clip (Fig. 108).

(9) Turn the brake shoe adjuster wheel until the adjuster is at shortest length.

(10) Remove the adjuster assembly from the parking brake shoe assemblies (Fig. 109).

REMOVAL AND INSTALLATION (Continued)

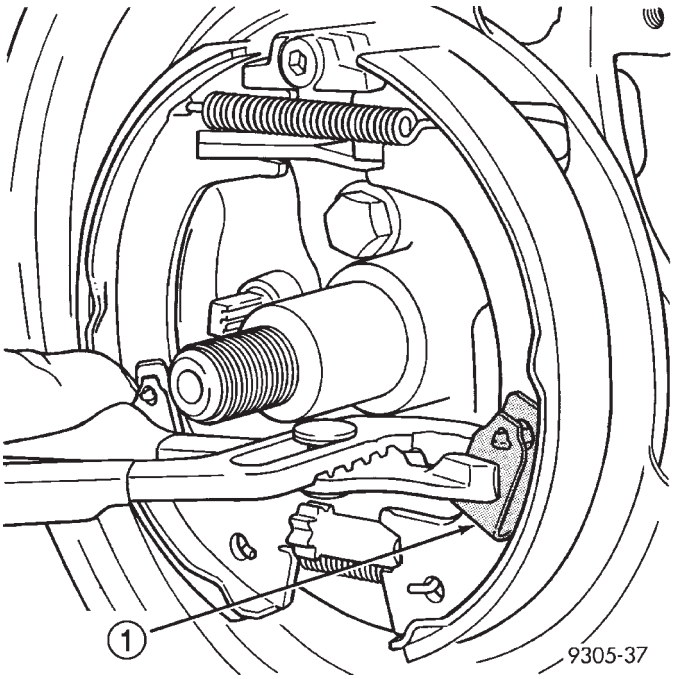

Fig. 108 Rear Brake Shoe Hold-Down Clip

1 – HOLD DOWN CLIP

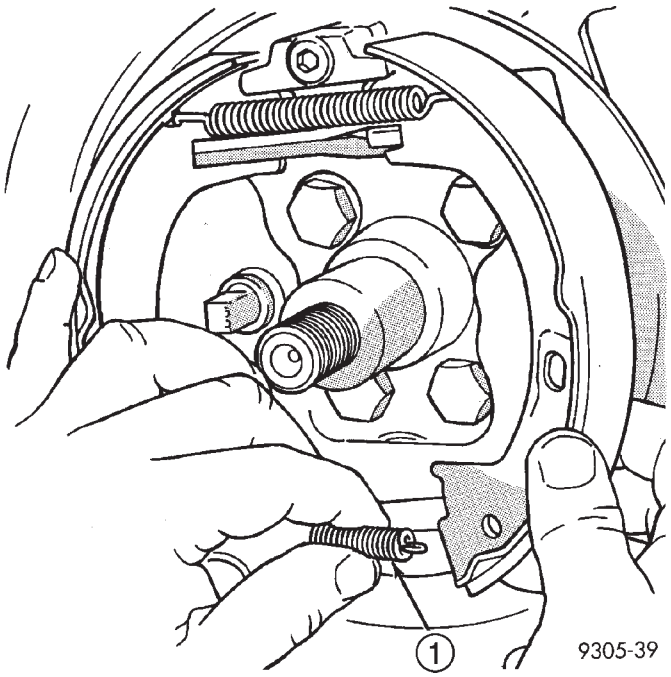

Fig. 110 Brake Shoe Lower Return Spring

1 – LOWER SPRING

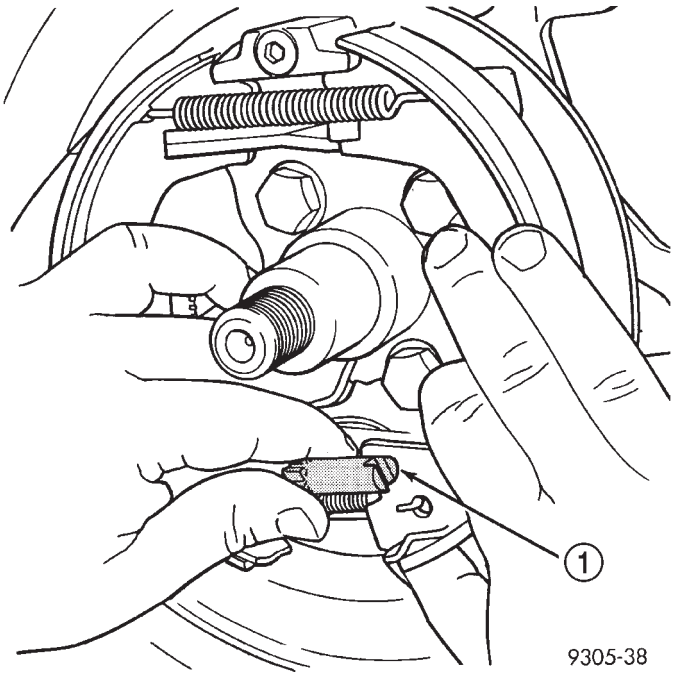

Fig. 109 Parking Brake Shoe Adjuster Assembly

1 – ADJUSTER

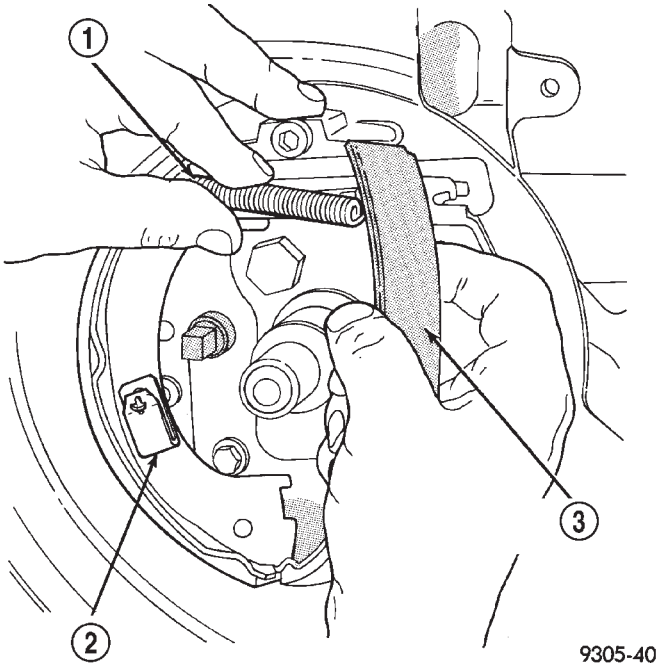

Fig. 111 Brake Shoe and Upper Spring

1 – UPPER SPRING
2 – HOLDDOWN CLIP
3 – REAR PARKING BRAKE SHOE

(11) Remove the lower shoe-to-shoe spring (Fig. 110).

(12) Pull the rear brake shoe away from anchor. Remove the rear brake shoe and upper return spring (Fig. 111).

(13) Remove the front brake shoe hold-down clip (Fig. 112). Remove the front brake shoe assembly.

REMOVAL AND INSTALLATION (Continued)

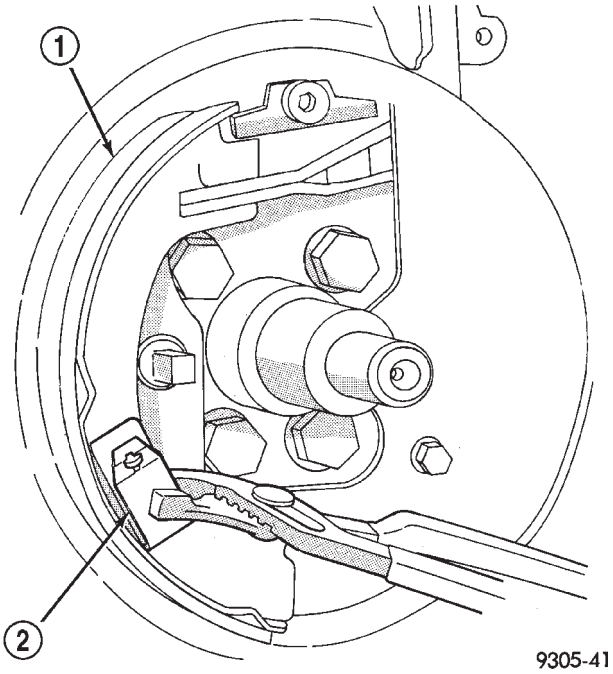

Fig. 112 Front Hold Down Clip And Brake Shoe

1 – FRONT BRAKE SHOE ASSEMBLY
2 – HOLD DOWN CLIP

INSTALLATION

(1) Install the front brake shoe and secure it in place with a hold-down clip (Fig. 112).

(2) Install the rear brake shoe and the upper shoe return spring (Fig. 111). Pull the rear brake shoe over the anchor block until it is properly located on the adapter.

(3) Install the lower shoe-to-shoe return spring (Fig. 110).

(4) Install the brake shoe adjuster assembly with the star wheel towards the rear (Fig. 109).

(5) Install the rear brake shoe hold down clip (Fig. 108).

(6) Adjust the parking brake shoes to a diameter of 171 mm (6.75 inch) (Fig. 113).

(7) Install the rear hub and bearing assembly on spindle.

(8) Install a new hub and bearing assembly retaining nut. Tighten the retaining nut to a torque of 217 N·m (160 ft. lbs.).

(9) Install the hub and bearing dust cap.

(10) Install the rear brake rotor.

(11) Install rear disc brake caliper.

(12) Install the tire and wheel assembly. Tighten the wheel mounting nuts to a torque of 135 N·m (100 ft. lbs.).

(13) Repeat the above procedure to the parking brake shoes on the other side of the vehicle.

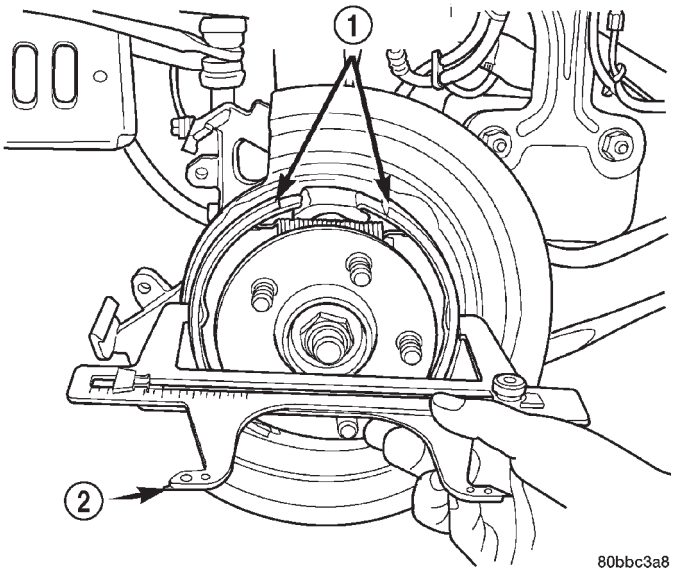

Fig. 113 Measuring Brake Shoes

1 – REAR PARKING BRAKE SHOES
2 – BRAKE SHOE GAUGE

(14) Adjust the parking brake shoes as necessary. Refer to ADJUSTMENTS in this section of this service manual group.

(15) Lower the vehicle.

DISASSEMBLY AND ASSEMBLY

DISC BRAKE CALIPER (FRONT)

NOTE: Before disassembling the brake caliper, remove it from the vehicle. Refer to REMOVAL AND INSTALLATION in this section.

NOTE: Before disassembling the brake caliper, clean and inspect it. Refer to CLEANING AND INSPECTION in this section.

DISASSEMBLY

WARNING: UNDER NO CONDITION SHOULD HIGH PRESSURE AIR EVER BE USED TO REMOVE A PISTON FROM A CALIPER BORE. PERSONAL INJURY COULD RESULT FROM SUCH A PRACTICE.

CAUTION: Do not use excessive force when clamping caliper in vise. Excessive vise pressure will cause bore distortion.

(1) Mount the caliper in a vise equipped with protective jaws.

DISASSEMBLY AND ASSEMBLY (Continued)

(2) Place a wooden block in the caliper as shown (Fig. 114).

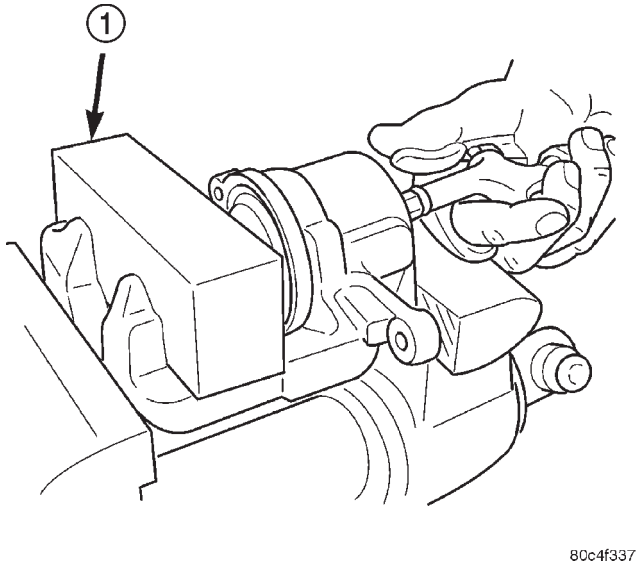

Fig. 114 Piston Removal

1 – WOOD BLOCK

WARNING: DO NOT PLACE FACE OR HANDS NEAR CALIPER AND PISTON IF USING COMPRESSED AIR PRESSURE TO REMOVE PISTON. DO NOT USE HIGH PRESSURE.

(3) If necessary, apply low pressure compressed air to the caliper fluid inlet in short spurts to force the piston out.

(4) Remove the piston from the caliper.

(5) Remove the dust boot from the piston and discard it.

CAUTION: Do not use a screw driver or other metal tool for seal removal. Using such tools can scratch the bore or leave burrs on the seal groove edges.

(6) Using a soft tool such as a plastic trim stick, work the piston seal out of its groove in caliper piston bore (Fig. 115). Discard the old seal.

(7) Clean the piston bore and drilled passage ways with alcohol or a suitable solvent. Wipe it dry using only a lint-free cloth.

(8) Inspect both the piston and bore for scoring or pitting. Bores that show light scratches or corrosion can usually be cleared of the light scratches or corrosion using crocus cloth.

ASSEMBLY

NOTE: Always use new, clean Mopar DOT 3 brake fluid when assembling the brake caliper.

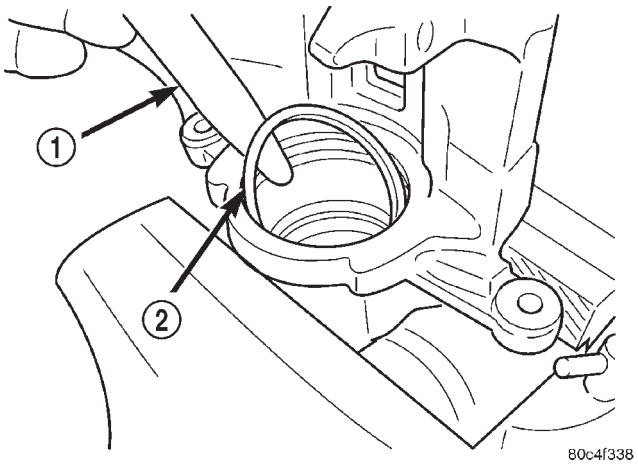

Fig. 115 Piston Seal Removal

1 – TRIM STICK
2 – SEAL

NOTE: Never use an old piston seal.

(1) Dip the new piston seal in clean brake fluid and install it in the groove of the caliper bore (Fig. 116). The seal should be started at one area of the groove and gently worked around into the groove using only your clean fingers to seat it.

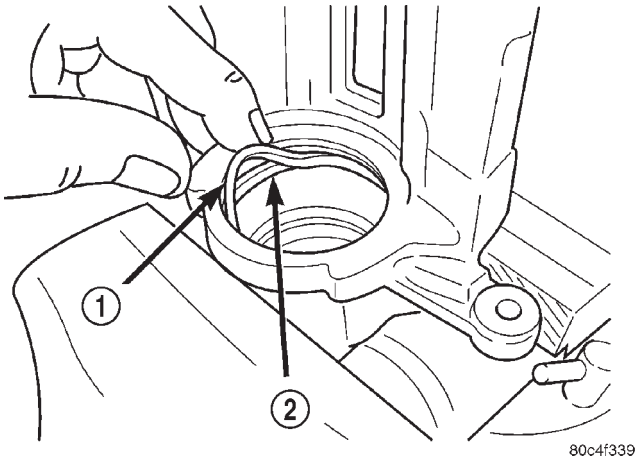

Fig. 116 New Piston Seal Installation

1 – SEAL
2 – GROOVE

(2) Coat the new piston with clean brake fluid.

(3) Coat the new piston boot with clean brake fluid leaving a generous amount inside the boot.

(4) Position the dust boot over the lower section of the piston (Fig. 117).

(5) Extend the dust boot below the bottom of the piston and guide the lip seal into the groove in the caliper piston bore.

DISASSEMBLY AND ASSEMBLY (Continued)

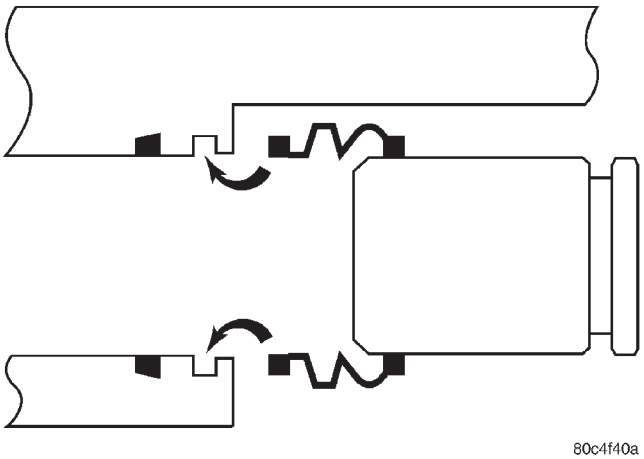

Fig. 117 Boot Installation

CAUTION: Force applied to the piston to seat it in the bore must be applied uniformly to avoid cocking and binding of the piston.

(6) Install the piston into the bore carefully pushing it past the piston seal using hand pressure (Fig. 118). Push the piston in until it bottoms in the caliper bore and the dust boot lip seal falls into the groove near the top of the piston.

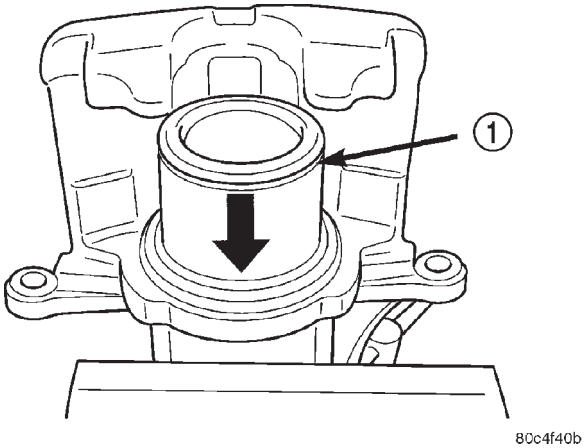

Fig. 118 Piston Installation

1 – PISTON GROOVE

(7) Reinstall the caliper on the vehicle and bleed the brakes as necessary.

DISC BRAKE CALIPER (REAR)

Before disassembling the brake caliper, clean and inspect it. Refer to CLEANING AND INSPECTION in this section of this service manual group.

CALIPER GUIDE PIN BUSHING

REMOVAL

(1) With one hand, push the guide pin bushing sleeve towards the back of the caliper, and at the same time, pull the sleeve out the back of the caliper and bushing (Fig. 119).

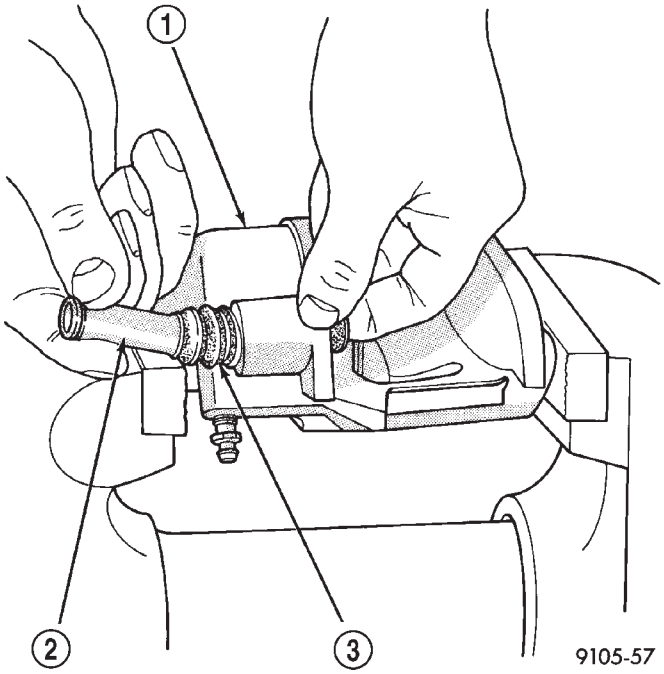

Fig. 119 Removing Sleeve From Bushing

1 – CALIPER
2 – SLEEVE
3 – BUSHING

(2) Using your fingers, collapse one side of the rubber guide pin bushing. Pull the guide pin bushing out the other side of the brake caliper mounting boss (Fig. 120).

INSTALLATION

(1) Fold the guide pin bushing in half lengthwise at the solid middle section (Fig. 121).

NOTE: To avoid damage to the bushing, do not use a sharp object to install the guide pin bushing.

(2) Insert the folded bushing into the caliper mounting boss using your fingers (Fig. 122).

(3) Unfold the bushing using your fingers or a wooden dowel until the bushing is fully seated into the caliper housing. The bushing flanges should be seated evenly on both sides of the bushing hole (Fig. 123).

(4) Lubricate the inside surfaces of the bushing using Mopar Dielectric Grease or an equivalent.

(5) Install the guide pin sleeve into one end of bushing until the seal area of bushing is past the seal groove in the sleeve (Fig. 124).

(6) Holding the convoluted boot on the opposite end of the bushing, push the steel sleeve through the bushing until the bushing boot is fully seated into

DISASSEMBLY AND ASSEMBLY (Continued)

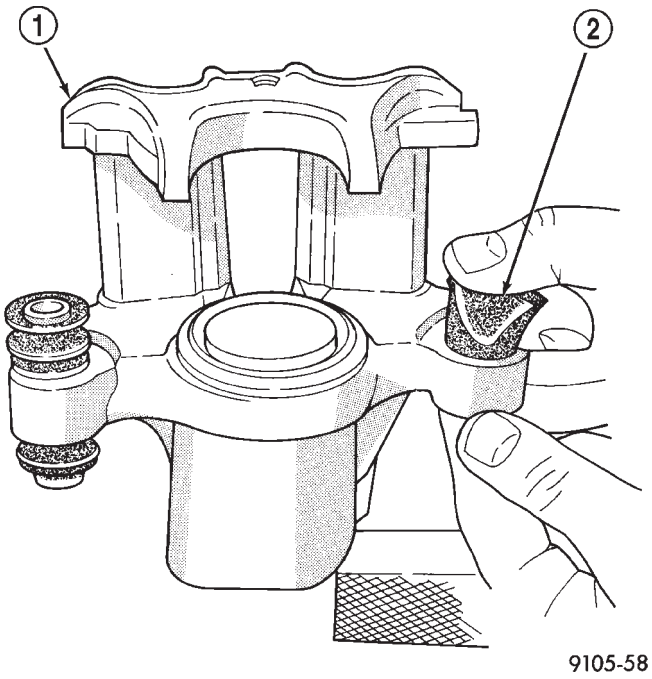

Fig. 120 Removing Bushing From Caliper

1 – CALIPER
2 – BUSHING

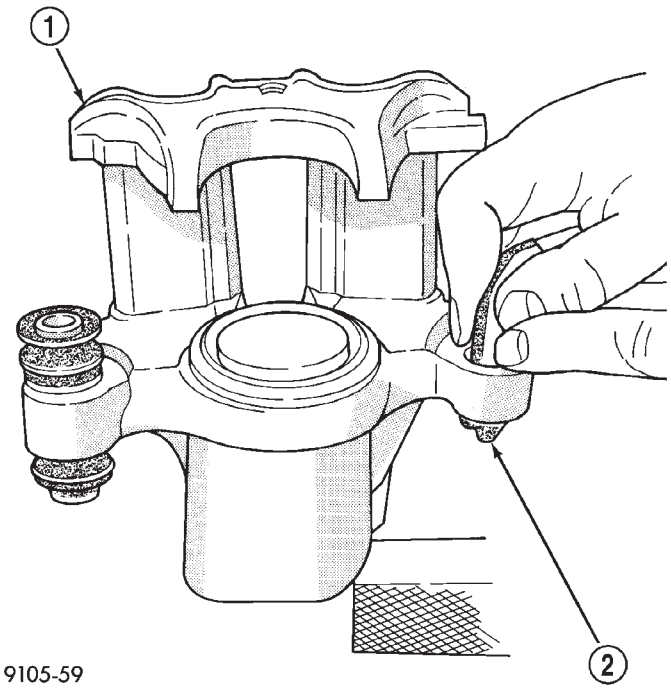

Fig. 122 Installing Caliper Guide Pin Bushing

1 – CALIPER
2 – BUSHING

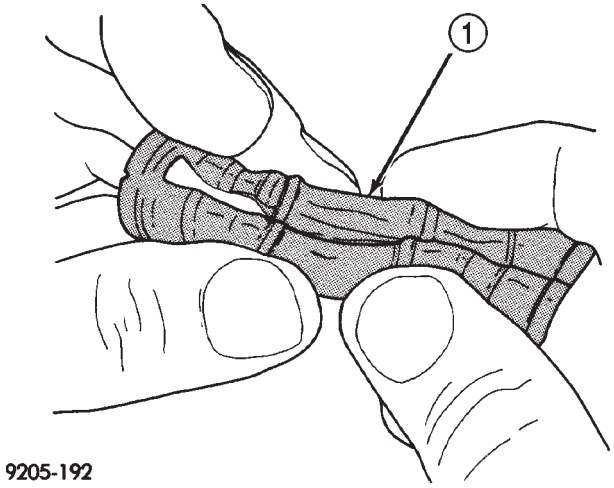

Fig. 121 Folded Caliper Guide Pin Bushing

1 – CALIPER GUIDE PIN BUSHING

the seal groove on that end of sleeve (Fig. 124). Install the other end bushing boot into the groove on that end of the bushing sleeve.

(7) Verify both ends of the bushing are seated in the sleeve groves (Fig. 125). When the sleeve is seated properly into the bushing, the sleeve/bushing can be held between your fingers and easily slid back and forth without the bushing unseating from the sleeve groove.

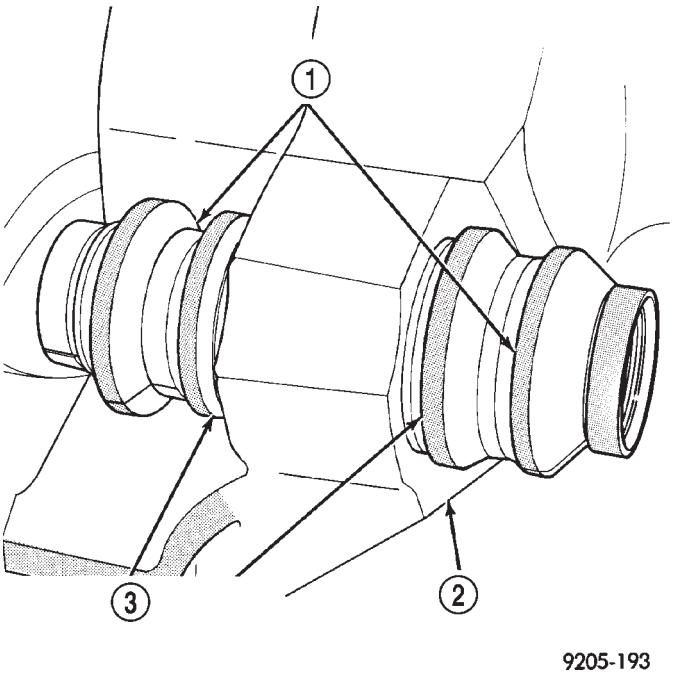

Fig. 123 Bushing Correctly Installed In Caliper

1 – BUSHING
2 – CALIPER
3 – BE SURE BOTH BUSHING FLANGES ARE FULLY SEATED AROUND CALIPER BUSHING BORES.

DISASSEMBLY AND ASSEMBLY (Continued)

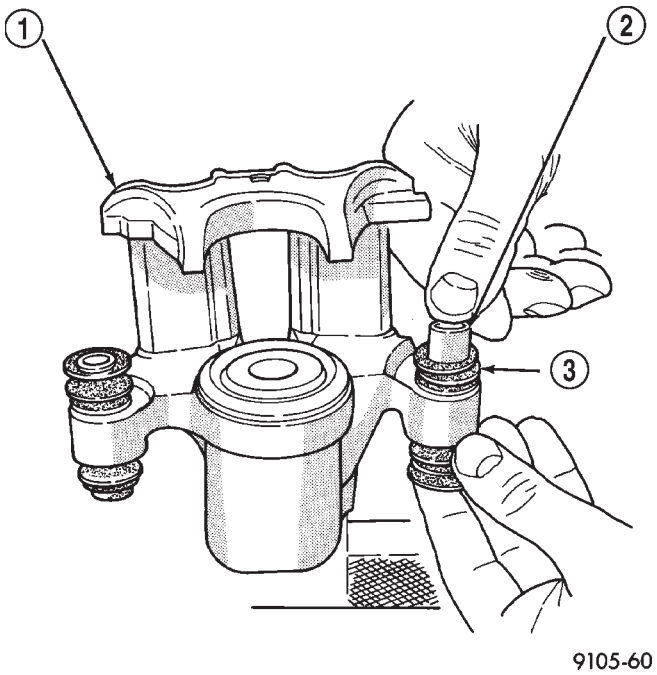

Fig. 124 Installing Sleeve In Bushing

1 – CALIPER
2 – SLEEVE
3 – BUSHING

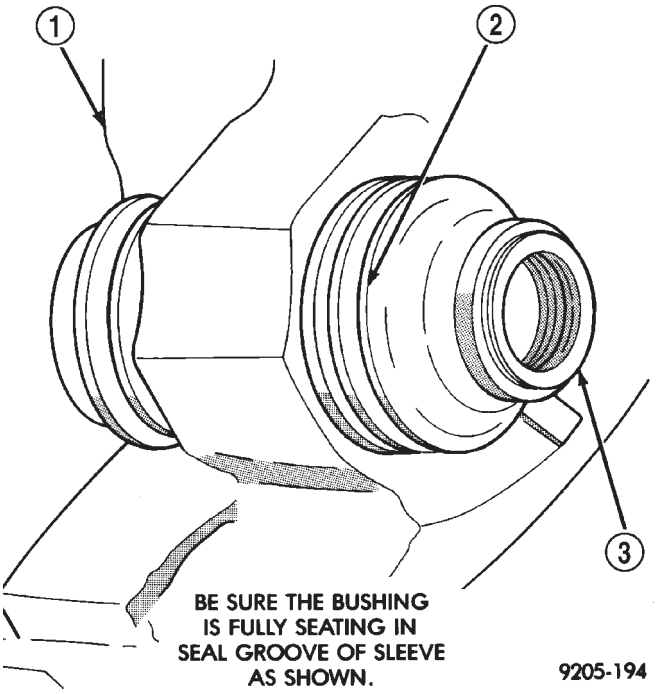

Fig. 125 Correctly Installed Guide Pin Sleeve And Bushing

1 – CALIPER
2 – BUSHING
3 – SLEEVE

CALIPER PISTON AND SEALS

CALIPER PISTON REMOVAL

WARNING: UNDER NO CONDITION SHOULD HIGH PRESSURE AIR EVER BE USED TO REMOVE A PISTON FROM A CALIPER BORE. PERSONAL INJURY COULD RESULT FROM SUCH A PRACTICE.

NOTE: The safest way to remove the piston from the caliper bore is to use the hydraulic pressure of the vehicle's brake system.

(1) Following the removal procedure in DISC BRAKE SHOES found in this section, remove the caliper from the brake rotor and hang the assembly on a wire hook away from rotor and body of the vehicle so brake fluid cannot get on these components. Remove the brake shoes, and place a small piece of wood between the piston and caliper fingers.

(2) Carefully depress the brake pedal to hydraulically push piston out of its bore. Once completed, apply and hold down the brake pedal to any position beyond the first inch of pedal travel using a brake pedal holding tool. This will prevent the fluid in the master cylinder reservoir from completely draining out.

(3) Disconnect the brake fluid flex hose from the caliper assembly and remove it from the vehicle.

CALIPER SEAL REMOVAL

CAUTION: Do not use excessive force when clamping caliper in vise. Excessive vise pressure will cause bore distortion.

(1) To disassemble the caliper, mount it in a vise equipped with protective jaws.

(2) Remove the piston dust boot from the caliper and discard (Fig. 126).

NOTE: Do not use a screw driver or other metal tool for seal removal. Using such tools can scratch the bore or leave burrs on the seal groove edges.

(3) Using a soft tool such as a plastic trim stick, work the piston seal out of its groove in caliper piston bore (Fig. 127). Discard the old seal.

(4) Clean the piston bore and drilled passage ways using alcohol or a suitable solvent. Wipe it dry using only a lint-free cloth.

DISASSEMBLY AND ASSEMBLY (Continued)

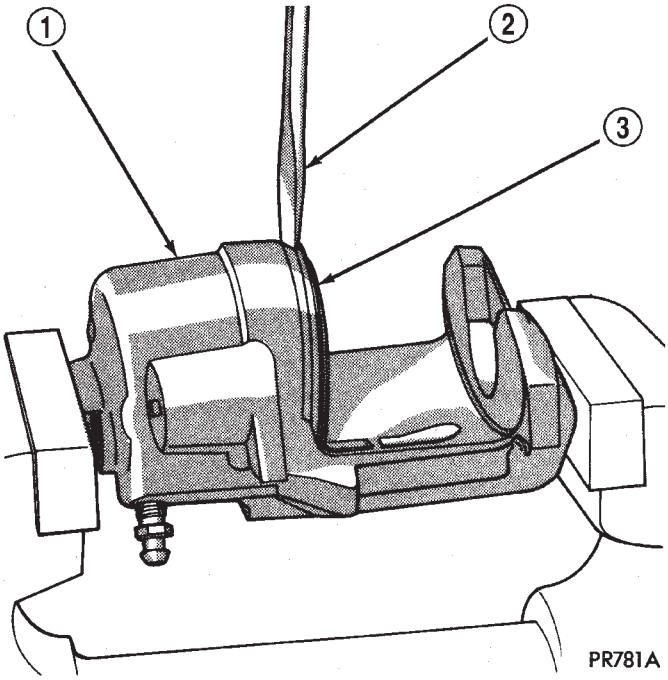

Fig. 126 Removing Caliper/Piston Dust Boot

1 – CALIPER
2 – SCREW DRIVER
3 – BOOT

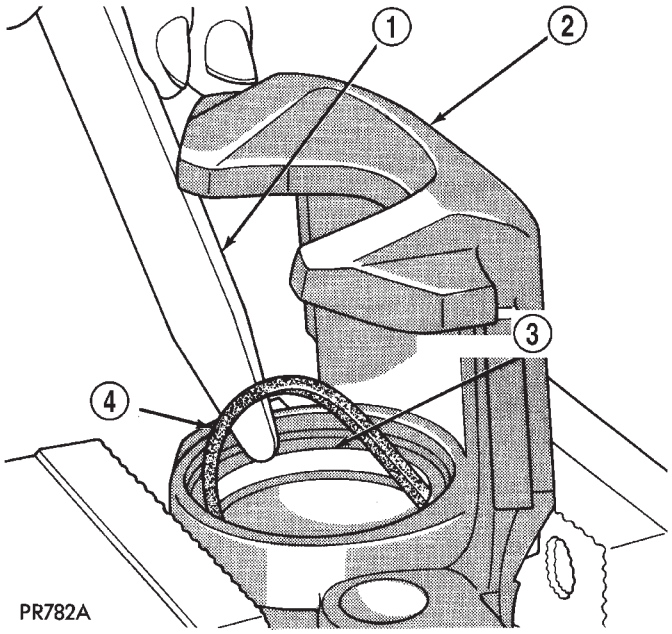

Fig. 127 Removing Piston Seal

1 – PLASTIC TRIM STICK
2 – CALIPER
3 – PISTON SEAL GROOVE
4 – PISTON SEAL

(5) Inspect the piston bore for scoring or pitting. Bores that show light scratches or corrosion can usually be cleared of the light scratches or corrosion using crocus cloth. Bores that have deep scratches or scoring should be honed. Use Caliper Hone, Special Tool C-4095, or the equivalent to hone the bore. Do not over-hone the bore. Don not increase the diameter of the bore more than 0.0254 mm (0.001 inch) (Fig. 128). If the bore does not clean up within this specification, a new caliper housing should be installed.

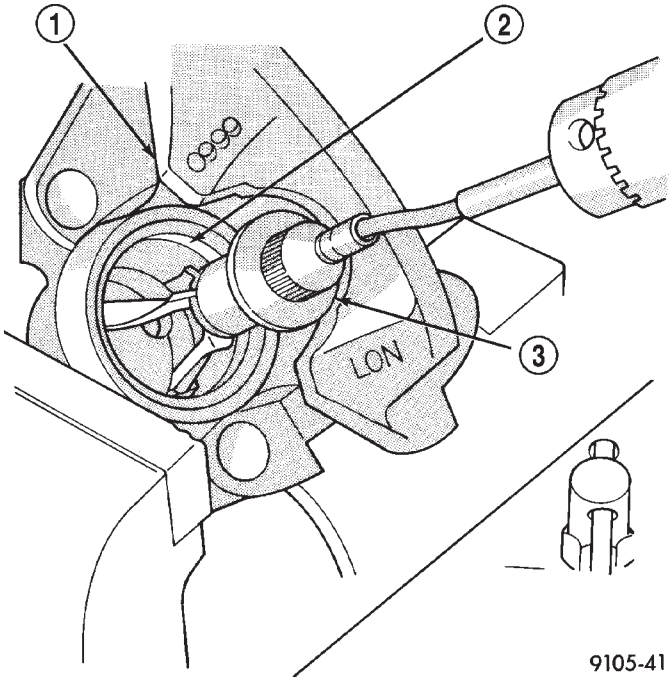

Fig. 128 Honing Brake Caliper Piston Bore

1 – CALIPER
2 – CALIPER BORE
3 – SPECIAL TOOL C-4095

NOTE: During the honing procedure, coat the stones and bore with brake fluid. After honing the bore, carefully clean the seal and boot grooves with a stiff non-metallic rotary brush. Use extreme care in cleaning the caliper after honing. Remove all dirt and grit by flushing the caliper bore with fresh clean brake fluid; wipe it dry with a clean, lint free cloth and then clean it a second time.

(6) Inspect the caliper piston for pitting, scratches, or any physical damage. Replace the piston if there is evidence of scratches, pitting or physical damage.

CALIPER SEAL AND PISTON INSTALLATION

NOTE: Never use an old piston seal.

(1) Dip the new piston seal in clean brake fluid and install it in the groove of the caliper bore. The seal should be started at one area of the groove and

DISASSEMBLY AND ASSEMBLY (Continued)

gently worked around and into the groove (Fig. 129) using only your clean fingers to seat it.

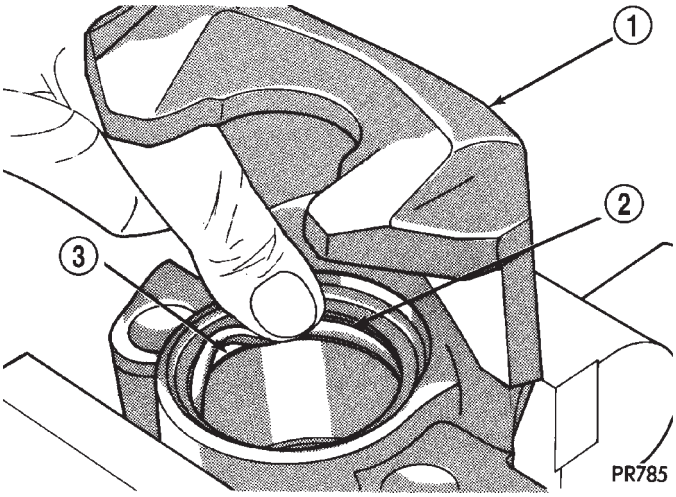

Fig. 129 Installing New Piston Seal

1 – CALIPER
2 – PISTON SEAL
3 – SEAL GROOVE

(2) Coat the new piston boot with clean brake fluid leaving a generous amount inside the boot.

(3) Position the dust boot over the piston after coating it with brake fluid.

CAUTION: Force applied to the piston to seat it in the bore must be applied uniformly to avoid cocking and binding of the piston.

(4) Install piston into caliper bore pushing it past the piston seal until it bottoms in the caliper bore (Fig. 130).

(5) Position the dust boot into the counterbore of the caliper assembly piston bore.

(6) Using a hammer and Installer, Special Tool C-4689, and Handle, Special Tool C-4171, drive the boot into the counterbore of the caliper (Fig. 131).

(7) Install the brake shoes.

(8) Reinstall the caliper on the vehicle and bleed the brakes as necessary. Follow the installation procedure found in DISC BRAKE CALIPER in the REMOVAL AND INSTALLATION section in this section of this service manual group.

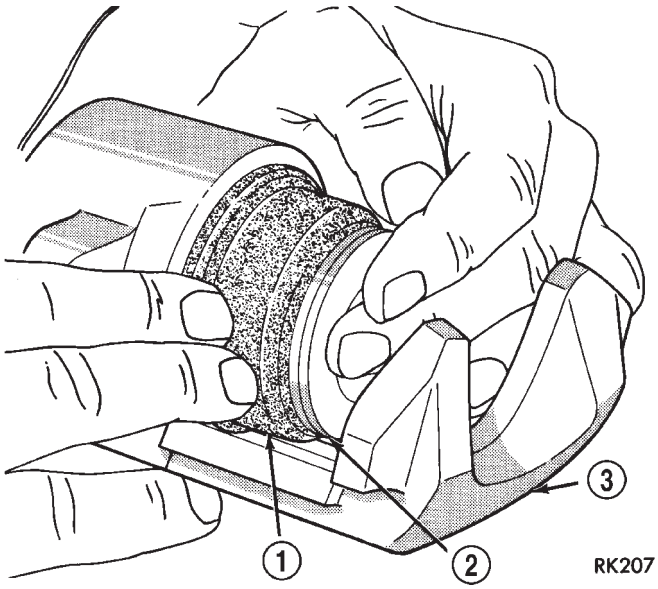

Fig. 130 Installing Piston Into Caliper Bore

1 – BOOT
2 – PISTON
3 – CALIPER

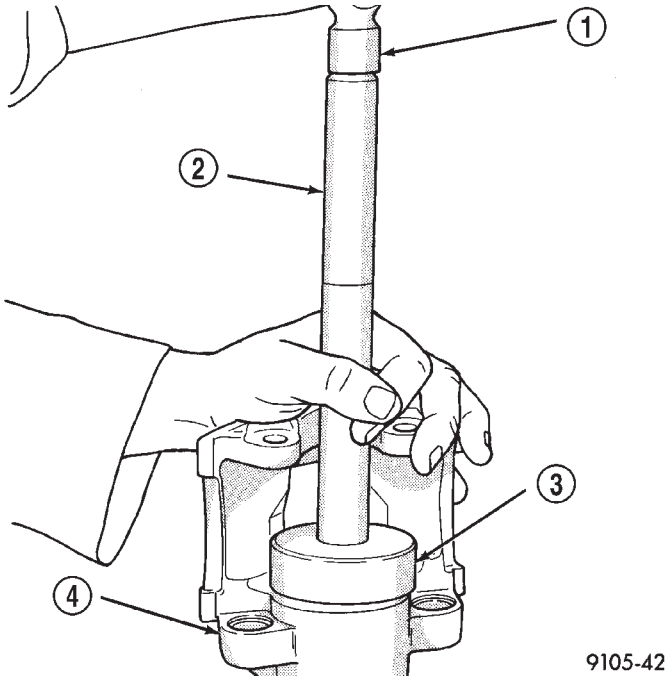

Fig. 131 Installing Dust Boot In Caliper Counterbore

1 – HAMMER
2 – SPECIAL TOOL C-4171
3 – SPECIAL TOOL C-4689
4 – CALIPER

CLEANING AND INSPECTION

BRAKE TUBES AND HOSES

Flexible rubber hose is used at both front and rear brakes. Inspection of brake hoses should be performed whenever the brake system is serviced and every 7,500 miles or 12 months, whichever comes first (every engine oil change). Inspect hydraulic brake hoses for severe surface cracking, scuffing, worn spots or physical damage. If the fabric casing of the rubber hose becomes exposed due to cracks or abrasions in the rubber hose cover, the hose should be replaced immediately. Eventual deterioration of the hose can take place with possible burst failure. Faulty installation can cause twisting, resulting in wheel, tire, or chassis interference.

The steel brake tubing should be inspected periodically for evidence of corrosion, physical damage or contact with moving or hot components of the vehicle.

DISC BRAKES (FRONT)

BRAKE SHOES

Clean the front brake shoes and calipers with a water-dampened cloth or with a brake cleaner. Do not use a petroleum based product.

If a visual inspection does not adequately determine the condition of the lining, a physical check will be necessary.

Remove the front disc brake shoes. Refer to DISC BRAKE SHOES in the REMOVAL AND INSTALLATION section in this section of this service manual group.

The combined brake shoe and lining material thickness should be measured at the thinnest part of the assembly.

When a set of brake shoes are worn to a total thickness of approximately 7.95 mm (5/16 inch) or less, they should be replaced.

Replace both brake shoe assemblies (inboard and outboard). It is necessary that both front wheel sets be replaced whenever brake shoe assemblies on either side are replaced.

If the brake shoe assemblies do not require replacement, reinstall the assemblies making sure each brake shoe is returned to the original position. Refer to DISC BRAKE SHOES in the REMOVAL AND INSTALLATION section in this section of this service manual group.

CALIPER INSPECTION

Check for brake fluid leaks in and around the boot area. Check for any ruptures, brittleness or damage to the piston dust boot. If the boot is damaged, or a fluid leak is visible, disassemble the caliper assembly and install a new seal and boot, and a piston if it is scored. Refer to DISC BRAKE CALIPER in the DISASSEMBLY AND ASSEMBLY section in this section of this service manual group.

Check the guide pin dust boots to determine if they are in good condition. Replace if they are damaged, dry, or found to be brittle. Refer to DISC BRAKE CALIPER in the DISASSEMBLY AND ASSEMBLY section in this section of this service manual group.

DISC BRAKES (REAR)

BRAKE SHOES

Clean the rear brake shoes and calipers with a water-dampened cloth or with a brake cleaner. Do not use a petroleum based product.

If a visual inspection does not adequately determine the condition of the lining, a physical check will be necessary.

Remove the rear disc brake shoes. Refer to DISC BRAKE SHOES in the REMOVAL AND INSTALLATION section in this section of this service manual group.

The combined brake shoe and lining material thickness should be measured at the thinnest part of the assembly.

When a set of brake shoes are worn to a total thickness of approximately 9.0 mm (0.35 inch) or less, they should be replaced.

Replace both brake shoe assemblies (inboard and outboard). It is necessary that both front wheel sets be replaced whenever brake shoe assemblies on either side are replaced.

If the brake shoe assemblies do not require replacement, reinstall the assemblies making sure each brake shoe is returned to the original position. Refer to DISC BRAKE SHOES in the REMOVAL AND INSTALLATION section in this section of this service manual group.

CALIPER INSPECTION

Check for brake fluid leaks in and around the boot area. Check for any ruptures, brittleness or damage to the piston dust boot. If the boot is damaged, or a fluid leak is visible, disassemble the caliper assembly and install a new seal and boot, and a piston if it is scored. Refer to DISC BRAKE CALIPER in the DISASSEMBLY AND ASSEMBLY section in this section of this service manual group.

Check the guide pin dust boots to determine if they are in good condition. Replace if they are damaged, dry, or found to be brittle. Refer to DISC BRAKE CALIPER in the DISASSEMBLY AND ASSEMBLY section in this section of this service manual group.

CLEANING AND INSPECTION (Continued)

DRUM BRAKES (REAR)

BRAKE SHOES

Clean the rear brake shoes and springs with a water-dampened cloth or with a brake cleaner. Do not use a petroleum based product.

Rear brake shoe lining should show contact across the entire width of the lining and also from the heel to the toe of the lining. Replace the shoes if noted otherwise.

Brake shoes with lack of contact at the toe or heel of the brake shoe lining may be improperly ground.

Clean and inspect the brake support plate and shoe adjuster screw. Apply a thin coat of Mopar Multi-Purpose Lubricant or equivalent to the threads of the self-adjuster (Fig. 132). Replace the adjuster screw if it is corroded.

NOTE: Adjuster screws are different side-to-side. Left side adjuster screws have left-hand threads and right side adjuster screws have right-handed threads.

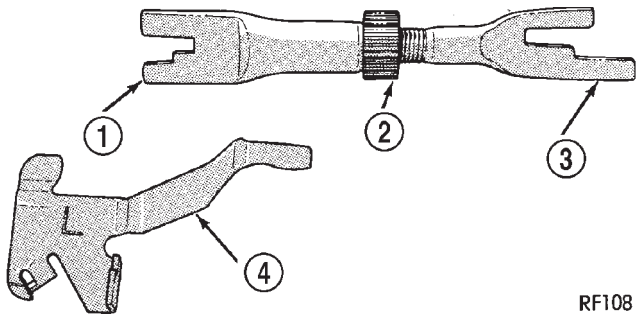

Fig. 132 Adjuster Screw And Lever (Typical)

1 – OUTBOARD FORWARD
2 – SELF ADJUSTER
3 – OUTBOARD REAR
4 – SELF ADJUSTER LEVER

If the old brake shoe return or hold down springs have overheated or are damaged, replace them. Overheating indications are paint discoloration or distorted end coils.

WHEEL CYLINDER

With the brake drums removed, inspect the wheel cylinder boots for evidence of a brake fluid leak. Visually check the boots for cuts, tears, or heat cracks. If any of these conditions exist, the wheel cylinders should be completely cleaned, inspected and new parts installed.

If a wheel cylinder is leaking and the brake lining material is saturated with brake fluid, the brake shoes must be replaced.

ADJUSTMENTS

DRUM BRAKE SHOES

(1) Verify the parking brake lever is in the fully released position.

(2) Raise the vehicle. Refer to HOISTING in the LUBRICATION AND MAINTENANCE group for the proper lifting procedure.

NOTE: Perform the following steps on each rear drum brake assembly.

(3) Remove the tire and wheel assembly from the vehicle.

(4) Remove the brake drum retaining clips (if equipped) (Fig. 133).

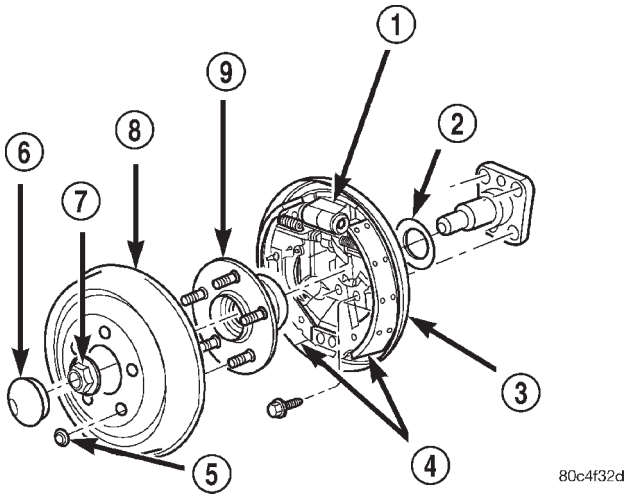

Fig. 133 Drum Brakes

1 – WHEEL CYLINDER
2 – SEAL
3 – SUPPORT PLATE
4 – BRAKE SHOES
5 – RETAINER CLIP
6 – DUST CAP
7 – NUT
8 – DRUM
9 – HUB AND BEARING

(5) Remove the brake drum (Fig. 133).

(6) Using a brake shoe gauge, Special Tool C-3919 or equivalent, measure the inside diameter of the brake drum (Fig. 134). Tighten the gauge set-screw at this measurement.

(7) Place the other side of the brake shoe gauge on the brake shoes as shown (Fig. 135).

NOTE: If a new brake drum is being installed, the gauge diameter should read approximately 219.21 mm - 219.67 mm (8.63 in. - 8.65 in.).

ADJUSTMENTS (Continued)

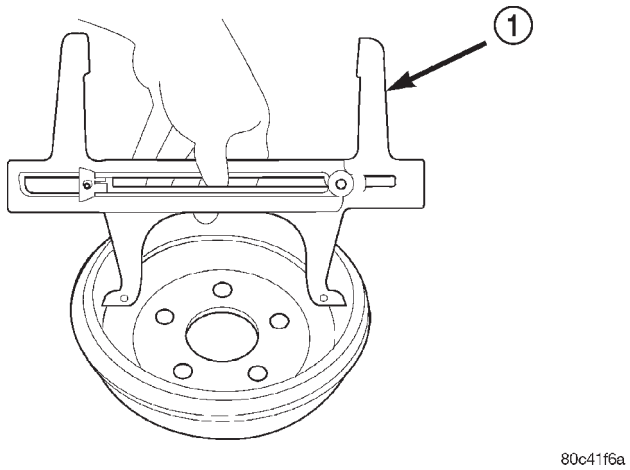

Fig. 134 Brake Drum Measurement

1 – BRAKE SHOE GAUGE

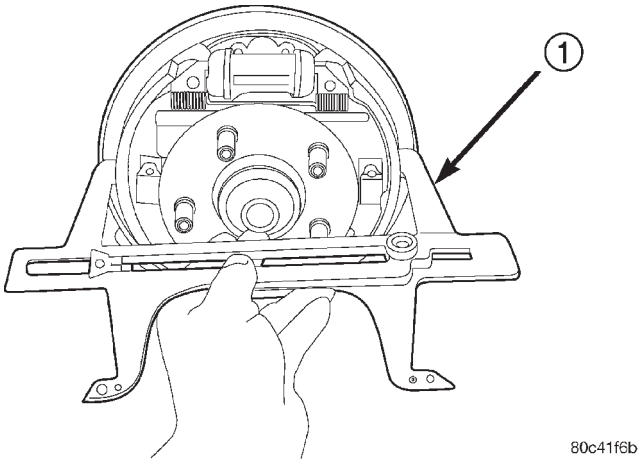

Fig. 135 Brake Shoe Measurement

1 – BRAKE SHOE GAUGE

(8) Adjust the shoe diameter to the setting on the gauge. To adjust the shoe diameter, turn the adjuster-screw star-wheel using a screwdriver inserted through the adjusting hole in the rear of the shoe support plate. Once the tip of the screwdriver contacts the star-wheel teeth, move the handle of tool downward using the support plate as a pivot to adjust the shoes outward.

(9) Once the shoe diameter is set, reinstall the brake drum.

(10) Turn the drum. A slight drag should be felt while rotating the drum.

(11) Install the tire and wheel assembly. Tighten the wheel mounting nuts to a torque of 135 N·m (100 ft. lbs.).

(12) After adjusting both rear drum brakes, lower the vehicle.

(13) Apply and release the parking brake lever one time after the adjustment process is completed so the parking brakes can readjust themselves to the new brake shoe adjustment.

PARKING BRAKE SHOES (REAR DISC BRAKES)

NOTE: The parking brake shoes used in the drum-in-hat park brake system do not automatically adjust to compensate for brake shoe lining wear. Therefore, it is necessary to manually adjust the parking brake shoes.

(1) Verify the parking brake lever is in the released position.

(2) Raise the vehicle. Refer to HOISTING in the LUBRICATION AND MAINTENANCE group for the proper lifting procedure.

(3) Remove the rubber plug from the adjusting hole in the disc brake caliper adapter.

(4) Adjust the parking brakes. Use the first bullet point for the adjustment of the left side parking brake shoes. Use the second bullet point for the adjustment of the right side parking brake shoes.

- Insert a medium size screwdriver through adjustment hole in the left backing plate. Position the screwdriver against the star wheel on the parking brake shoe adjuster. Using the screwdriver, rotate the star wheel downward until a slight drag is noticed when turning the rear tire and wheel assembly. Then, using the screwdriver, slowly rotate the star wheel upward, backing off the adjuster, just enough to allow the rear tire and wheel assembly to rotate without the parking brake shoes dragging. Do not back off the adjuster star wheel more than two clicks past the point of no drag. The parking brake shoe-to-drum clearance is now properly set.
- Insert a medium size screwdriver through adjustment hole in the right backing plate. Position the screwdriver against the star wheel on the parking brake shoe adjuster. Using the screwdriver, rotate the star wheel upward until a slight drag is noticed when turning the rear tire and wheel assembly. Then, using the screwdriver, slowly rotate the star wheel downward, backing off the adjuster, just enough to allow the rear tire and wheel assembly to rotate without the parking brake shoes dragging. Do not back off the adjuster star wheel more that two clicks past the point of no drag. The parking brake shoe-to-drum clearance is now properly set.

(5) Install the rubber plug in the adjusting holes of the disc brake caliper adapter.

(6) Lower the vehicle until the rear tires are just clearing the floor.

(7) Reach inside the vehicle and fully apply and release the park brakes two times after adjusting the parking brake shoes.

(8) With the parking brake lever in the fully applied position, attempt to hand rotate each rear

ADJUSTMENTS (Continued)

tire and wheel assembly to ensure that the parking brake shoes are working.

(9) With the parking brake lever in the released position, hand rotate each rear tire and wheel assembly to ensure that the parking brake shoes are not dragging.

SPECIFICATIONS

BRAKE FLUID

The brake fluid used in this vehicle must conform DOT 3 specifications and SAE J1703 standards. No other type of brake fluid is recommended or approved for usage in the vehicle brake system. Use only Mopar® brake fluid or an equivalent from a tightly sealed container.

CAUTION: Never use reclaimed brake fluid or brake fluid from a container that has been left open. An open container of brake fluid will absorb moisture from the air contaminating the fluid.

CAUTION: Never use any type of a petroleum-based fluid in the brake hydraulic system. Use of such type fluids will result in seal damage of the vehicle brake hydraulic system causing failure of the vehicle brake system. Petroleum based fluids are items such as engine oil, transmission fluid, power steering fluid, etc.

BRAKE ACTUATION SYSTEM

Actuation:
Vacuum Operated Power Brakes ..... Standard
Hydraulic System ..... Dual-Diagonally Split
Brake Pedal:
Pedal Ratio 3.41
Master Cylinder Assembly:
Type ..... Dual Tandem
Body Material ..... Anodized Aluminum
Reservoir Material ..... Polypropelene
Bore And Stroke ..... 23.82 mm X 34.0 mm (0.937 in. X 1.34 in.)
Displacement Split 50/50
Master Cylinder Fluid Outlet Ports:
Tube Fitting Type ..... SAE 45° Inverted Flare
W/ABS - Primary Tube Nut Thread .. 7/16 in.–24
W/ABS - Secondary Tube Nut Thread .. 3/8 in.–24
W/O ABS - All Tube Nut Threads ... 7/16 in.–24
Power Brake Booster:
Make/Type ..... Bosch/Vacuum
Mounting Studs ..... M8 X 1.25
Diaphragm Size/Type ..... 205 mm Tandem
Actuation:
Proportioning Valve:
Material ..... Aluminum
Function ..... Hydraulic Pressure Proportioning
ABS Hydraulic Control Unit:
Hydraulic Tube Fitting Type ..... SAE 45° Inverted Flare
Tube Nut Threads 7/16 in.–24

BRAKE FASTENER TORQUE

DESCRIPTION	TORQUE
ABS Integrated Control Unit:	
Mounting Bolts	11 N·m (97 in. lbs.)
CAB Mounting bolts	2 N·m (17 in. lbs.)
Bracket-to-Frame Rail Bolts	23 N·m (200 in. lbs.)
ABS Wheel Speed Sensor:	
Head Mounting bolt	12 N·m (105 in. lbs.)
Brake Tubes:	
Tube Nuts	17 N·m (145 in. lbs.)
Disc Brake Adapter (Front):	
Mounting Bolts	104 N·m (77 ft. lbs.)
Disc Brake Adapter (Rear):	
Mounting Bolts	95 N·m (70 ft. lbs.)
Disc Brake Caliper (Front):	
Caliper Banjo Bolt	26 N·m (230 in. lbs.)
Guide Pin Bolts	35 N·m (26 ft. lbs.)
Bleeder Screw	13 N·m (115 in. lbs.)
Disc Brake Caliper (Rear):	
Caliper Banjo Bolt	26 N·m (230 in. lbs.)
Guide Pin Bolts	22 N·m (192 in. lbs.)
Bleeder Screw	15 N·m (125 in. lbs.)
Drum Brake Shoe Support Plate (Rear):	
Mounting Bolts	95 N·m (70 ft. lbs.)
Hub And Bearing (Rear):	
Retaining Nut	217 N·m (160 ft. lbs.)
Wheel Mounting Nuts	135 N·m (100 ft. lbs.)
Master Cylinder:	
Mounting Nuts	28 N·m (250 in. lbs.)
Parking Brake:	
Lever Mounting Nut And Screw	28 N·m (250 in. lbs.)
Power Brake Booster:	
Mounting Nuts	34 N·m (300 in. lbs.)
Wheel Cylinder (Rear):	
Mounting Bolts	13 N·m (115 in. lbs.)
Bleeder Screw	10 N·m (80 in. lbs.)

SPECIAL TOOLS

BASE BRAKE SYSTEM

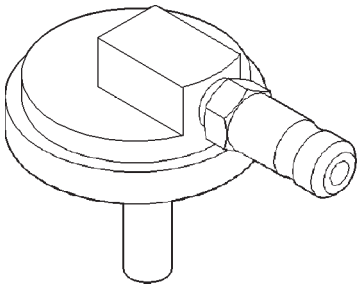

Cap Adapter, Brake Pressure Bleeder 6921

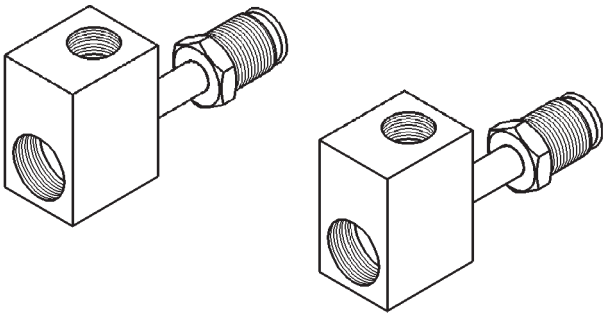

Adapters, Brake Pressure 8187

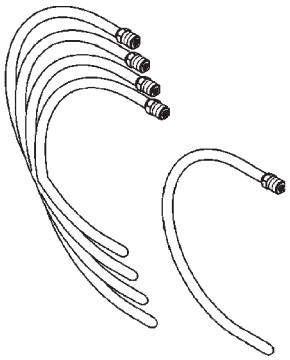

Tubes, Master Cylinder Bleed 8358

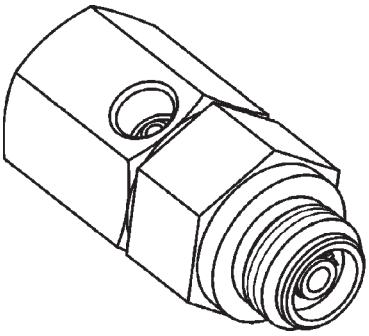

Adapter, Brake Pressure 8644

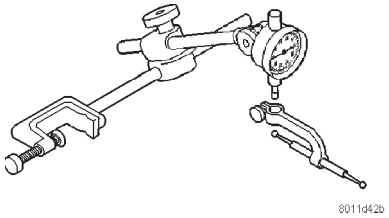

Dial Indicator C-3339

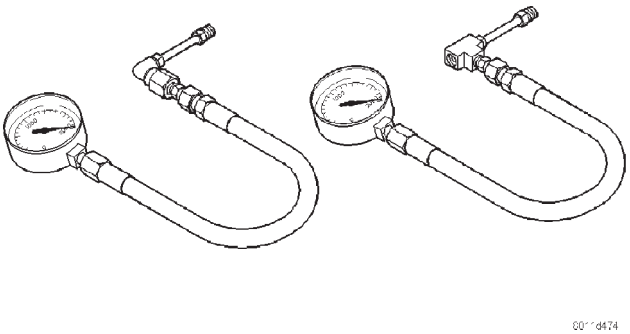

Gauge Set C-4007-A

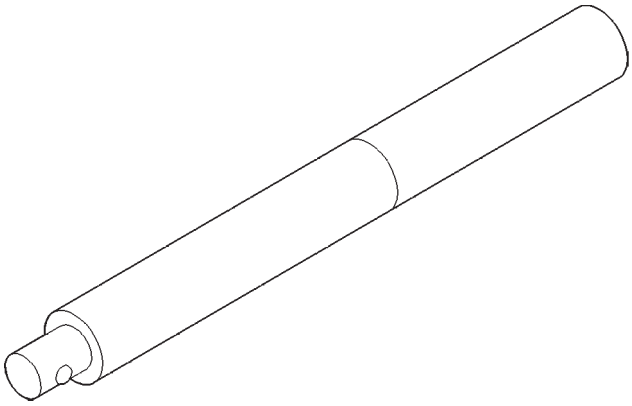

Handle, Universal C-4171

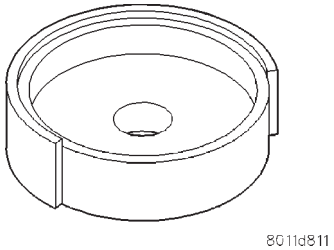

Installer, Dust Boot C-4689

ANTILOCK BRAKE SYSTEM

TABLE OF CONTENTS

page

DESCRIPTION AND OPERATION
ANTILOCK BRAKE SYSTEM 67
ANTILOCK BRAKE SYSTEM COMPONENTS 68
ELECTRONIC BRAKE DISTRIBUTION (EBD) 72
TRACTION CONTROL SYSTEM. 73
HYDRAULIC CIRCUITS AND VALVE OPERATION 73
DIAGNOSIS AND TESTING
SERVICE WARNINGS AND CAUTIONS 76
ABS GENERAL DIAGNOSTICS INFORMATION . . 77
ABS WIRING DIAGRAM INFORMATION. 77
ABS VEHICLE TEST DRIVE. 77
ABS ELECTRONIC DIAGNOSIS. 77
TONE WHEEL 79
BRAKE FLUID CONTAMINATION 79

page

SERVICE PROCEDURES
BRAKE FLUID LEVEL CHECKING 79
ANTILOCK BRAKE SYSTEM BLEEDING 79
MASTER CYLINDER BLEEDING 80
REMOVAL AND INSTALLATION
SERVICE WARNINGS AND CAUTIONS 80
MASTER CYLINDER 81
INTEGRATED CONTROL UNIT. 82
WHEEL SPEED SENSOR (FRONT) 84
WHEEL SPEED SENSOR (REAR) 85
DISASSEMBLY AND ASSEMBLY
INTEGRATED CONTROL UNIT. 86
SPECIFICATIONS
TONE WHEEL RUNOUT. 87
WHEEL SPEED SENSOR AIR GAP 87
BRAKE FASTENER TORQUE. 87

DESCRIPTION AND OPERATION

ANTILOCK BRAKE SYSTEM

DESCRIPTION

This section covers the physical and operational descriptions, and the on-car service procedures for the Mark 20e Antilock Brake System (ABS) with traction control. It is the only antilock brake system available on this vehicle.

The traction control system reduces wheel slip and maintains traction at the driving speeds below 56 km/h (35 mph) when road conditions call for traction assistance. Refer to TRACTION CONTROL SYSTEM in this section for more information.

All vehicles equipped with ABS use electronic brake distribution (EBD) to balance front-to-rear braking when the brakes are applied in the partial braking range. Refer to ELECTRONIC BRAKE DISTRIBUTION in this section for more information.

This system shares most base brake hardware used on vehicles without ABS. A vehicle equipped with ABS, however, uses a different master cylinder and brake tubes. Also included in the ABS system is an integrated control unit (ICU) and four wheel speed sensors. These components are described in detail in this section. All vehicles with ABS come standard with four-wheel-disc brakes and traction control.

The antilock brake system prevents wheel lockup under braking conditions on virtually any type of road surface. Antilock braking is desirable because a vehicle that is stopped without locking the wheels retains directional stability and some steering capability. This allows the driver to retain greater control of the vehicle during braking.

OPERATION

There are a few performance characteristics of the Mark 20e Antilock Brake System that may at first seem abnormal, but in fact are normal. These characteristics are described below.

NORMAL BRAKING

Under normal braking conditions, the ABS functions the same as a standard base brake system with a diagonally split master cylinder and conventional vacuum assist.

ABS BRAKING

ABS operation is available at all vehicle speeds above 5–8 km/h (3–5 mph). If a wheel locking tendency is detected during a brake application, the brake system enters the ABS mode. During ABS braking, hydraulic pressure in the four wheel circuits is modulated to prevent any wheel from locking. Each wheel circuit is designed with a set of electric solenoids to allow modulation, although for vehicle stability, both rear wheel solenoids receive the same electrical signal. Wheel lockup may be perceived at the very end of an ABS stop and is considered normal.

DESCRIPTION AND OPERATION (Continued)

During an ABS stop, the brakes hydraulic system is still diagonally split. However, the brake system pressure is further split into four control channels. During antilock operation of the vehicle's brake system, the wheels are controlled independently and are on separate control channels.

The system can build, hold and release pressure at each wheel, depending on signals generated by the wheel speed sensors (WSS) at each wheel and received at the controller antilock brake (CAB).

NOISE AND BRAKE PEDAL FEEL

During ABS braking, some brake pedal movement may be felt. In addition, ABS braking will create ticking, popping, or groaning noises heard by the driver. This is normal and is due to pressurized fluid being transferred between the master cylinder and the brakes. If ABS operation occurs during hard braking, some pulsation may be felt in the vehicle body due to fore-and-aft movement of the suspension as brake pressures are modulated.

At the end of an ABS stop, ABS is turned off when the vehicle is slowed to a speed of 5–6 km/h (3–4 mph). There may be a slight brake pedal drop anytime that the ABS is deactivated, such as at the end of the stop when the vehicle speed is less than 5 km/h (3 mph) or during an ABS stop where ABS is no longer required. These conditions exist when a vehicle is being stopped on a road surface with patches of ice, loose gravel, or sand on it. Also, stopping a vehicle on a bumpy road surface activates ABS because of the wheel hop caused by the bumps.

TIRE NOISE AND MARKS

Although the ABS system prevents complete wheel lockup, some wheel slip is desired in order to achieve optimum braking performance. Wheel slip is defined as follows: 0 percent slip means the wheel is rolling freely and 100 percent slip means the wheel is fully locked. During brake pressure modulation, wheel slip is allowed to reach up to 25–30 percent. This means that the wheel rolling velocity is 25–30 percent less than that of a free rolling wheel at a given vehicle speed. This slip may result in some tire chirping, depending on the road surface. This sound should not be interpreted as total wheel lockup.

Complete wheel lockup normally leaves black tire marks on dry pavement. The ABS will not leave dark black tire marks since the wheel never reaches a fully locked condition. However, tire marks may be noticeable as light patched marks.

START-UP CYCLE

When the ignition is turned on, a popping sound and a slight brake pedal movement may be noticed. The ABS warning lamp will also be on for up to 5 seconds after the ignition is turned on. When the vehicle is first driven off, a humming may be heard or felt by the driver at approximately 25–40 km/h (15–25 mph). All of these conditions are a normal function of ABS as the system is performing a diagnosis check.

PREMATURE ABS CYCLING

Symptoms of premature ABS cycling include: clicking sounds from the solenoid valves; pump/motor running; and pulsations in the brake pedal. Premature ABS cycling can occur at any braking rate of the vehicle and on any type of road surface. Neither the red BRAKE warning lamp, nor the amber ABS warning lamp, illuminate and no fault codes are stored in the CAB.

Premature ABS cycling is a condition that needs to be correctly assessed when diagnosing problems with the antilock brake system. It may be necessary to use a DRB scan tool to detect and verify premature ABS cycling.

Check the following common causes when diagnosing premature ABS cycling: damaged tone wheels; incorrect tone wheels; damaged steering knuckle wheel speed sensor mounting bosses; loose wheel speed sensor mounting bolts; excessive tone wheel runout; or an excessively large tone wheel-to-wheel speed sensor air gap. Give special attention to these components when diagnosing a vehicle exhibiting premature ABS cycling.

After diagnosing the defective component, repair or replace it as required. When the component repair or replacement is completed, test drive the vehicle to verify that premature ABS cycling has been corrected.

ANTILOCK BRAKE SYSTEM COMPONENTS

The following is a detailed description of the antilock brake system components. For information on servicing base brake system components used in conjunction with these components, see the BASE BRAKE SYSTEM found at the beginning of this service manual group.

MASTER CYLINDER

DESCRIPTION

A vehicle equipped with ABS uses a different master cylinder than a vehicle that is not equipped with ABS. Vehicles equipped with ABS use a center-port master cylinder with only two outlet ports (Fig. 1).

The brake tubes from the primary and secondary outlet ports on the master cylinder go directly to the integrated control unit (ICU).

The master cylinder mounts to the power brake booster in the same manner a non-ABS master cylinder does.

DESCRIPTION AND OPERATION (Continued)

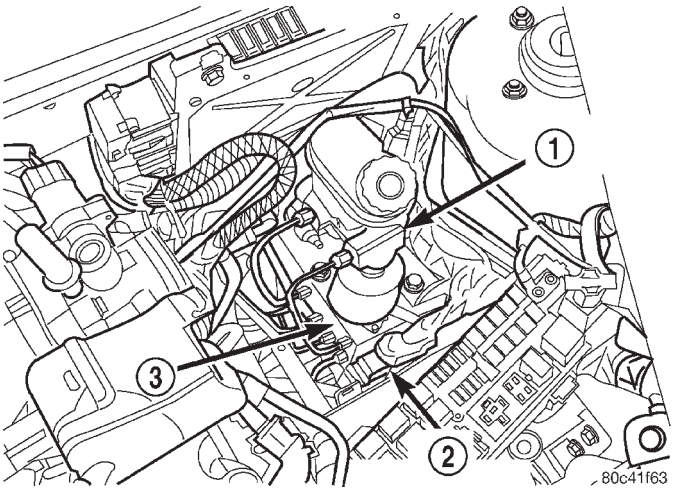

Fig. 1 Master Cylinder And ICU

1 – MASTER CYLINDER
2 – CAB CONNECTOR
3 – ICU

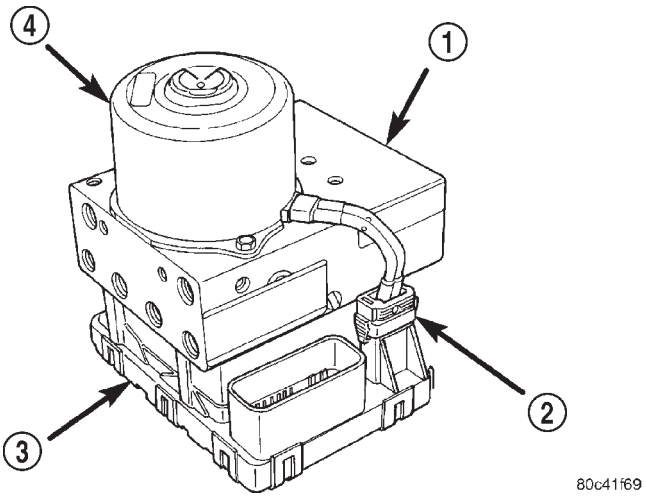

Fig. 2 Integrated Control Unit (ICU)

1 – HCU
2 – PUMP/MOTOR CONNECTOR
3 – CAB
4 – PUMP/MOTOR

OPERATION

When the brake pedal is depressed, the master cylinder primary and secondary pistons apply brake pressure through the master cylinder's primary and secondary outlet ports and the chassis brake tubes leading directly to the integrated control unit (ICU).

INTEGRATED CONTROL UNIT (ICU)

DESCRIPTION

The hydraulic control unit (HCU) and the controller antilock brake (CAB) used with this antilock brake system are combined (integrated) into one unit, which is called the integrated control unit (ICU) (Fig. 2). The ICU is located on the driver's side of the vehicle, and is mounted to the left front frame rail below the master cylinder (Fig. 1).

The ABS with traction control ICU consists of the following components: the CAB, eight (build/decay) solenoid valves (four inlet valves and four outlet valves), two hydraulic shuttle valves, two traction control valves, valve block, fluid accumulators, a pump, and an electric pump/motor.

The replaceable components of the ICU are the HCU and the CAB. No attempt should be made to service any components found inside of the HCU or CAB.

OPERATION

For information on the operation of the ICU, refer to:

- CONTROLLER ANTILOCK BRAKES (CAB)
- HYDRAULIC CONTROL UNIT (HCU)
- HYDRAULIC CIRCUITS AND VALVE OPERATION (found elsewhere in this section)

CONTROLLER ANTILOCK BRAKE (CAB)

DESCRIPTION

The controller antilock brake (CAB) is a microprocessor-based device which monitors the ABS system during normal braking and controls it when the vehicle is in an ABS stop. The CAB is mounted to the bottom of the HCU (Fig. 2). The CAB uses a 25-way electrical connector on the vehicle wiring harness. The power source for the CAB is through the ignition switch in the RUN or ON position. The CAB is on the PCI bus.

OPERATION

The primary functions of the (CAB) are to:

(1) monitor the antilock brake system for proper operation.

(2) detect wheel locking or wheel slipping tendencies by monitoring the speed of all four wheels of the vehicle.

(3) control fluid modulation to the wheel brakes while the system is in an ABS mode or the traction control system is activated.

(4) store diagnostic information.

(5) provide communication to the DRBIII® scan tool while in diagnostic mode.

The CAB constantly monitors the antilock brake system for proper operation. If the CAB detects a fault, it will send a message to the mechanical instrument cluster (MIC) instructing it to turn on the amber ABS warning indicator and disable the antilock braking system. The normal base braking system will remain operational.

DESCRIPTION AND OPERATION (Continued)

The CAB continuously monitors the speed of each wheel through the signals generated by the wheel speed sensors to determine if any wheel is beginning to lock. When a wheel locking tendency is detected, the CAB commands the solenoid coils to actuate. The coils then open and close the valves in the HCU that modulate brake fluid pressure in some or all of the hydraulic circuits. The CAB continues to control pressure in individual hydraulic circuits until a locking tendency is no longer present.

The CAB contains a self-diagnostic program that monitors the antilock brake system for system faults. When a fault is detected, the amber ABS warning indicator is turned on and the fault diagnostic trouble code (DTC) is then stored in a diagnostic program memory. These DTC's will remain in the CAB memory even after the ignition has been turned off. The DTC's can be read and cleared from the CAB memory by a technician using the DRBIII® scan tool. If not cleared with the scan tool, the fault occurrence and DTC will be automatically cleared from the CAB memory after the identical fault has not been seen during the next 3,500 miles of vehicle operation.

CONTROLLER ANTILOCK BRAKE INPUTS

- Wheel speed sensors (four)
- Brake lamp switch
- Ignition switch
- System relay voltage
- Ground
- Traction control indicator
- Diagnostic communication (PCI)

CONTROLLER ANTILOCK BRAKE OUTPUTS

- Amber ABS warning indicator actuation (through MIC)
- Red BRAKE warning indicator actuation (through MIC)
- Traction control indictor actuation-Trac On (through MIC)
- Traction control indictor actuation-Trac Off (through MIC)
- Diagnostic communication. (PCI)

HYDRAULIC CONTROL UNIT (HCU)

DESCRIPTION

The hydraulic control unit (HCU) is mounted to the CAB as part of the ICU (Fig. 2). The HCU controls the flow of brake fluid to the brakes using a series of valves and accumulators. A pump/motor is mounted on the HCU to supply build pressure to the brakes during an ABS stop.

OPERATION

For information on the operation of the HCU as a whole, refer to Hydraulic Circuits And Valve Operation which can be found elsewhere in this section. For information on the operation of the components within the HCU, refer to the following three topics.

VALVES AND SOLENOIDS

The valve block contains four inlet valves and four outlet solenoid valves. The inlet valves are spring-loaded in the open position and the outlet valves are spring-loaded in the closed position during normal braking. The fluid is allowed to flow from the master cylinder to the wheel brakes.

During an ABS stop, these valves cycle to maintain the proper slip ratio for each wheel. The inlet valve closes preventing further pressure increase and the outlet valve opens to provide a path from the wheel brake to the HCU accumulators and pump/motor. This releases (decays) pressure from the wheel brake, thus releasing the wheel from excessive slippage. Once the wheel is no longer slipping, the outlet valve is closed and the inlet valve is opened to reapply (build) pressure.

There are four other valves in the HCU. These four remaining valves are used for traction control. Two traction control (TC) valves, mounted in the HCU valve block, are normally in the open position and close only when the traction control is applied. There are also two shuttle valves which control pressure return to the master cylinder under ABS and traction control conditions.

These TC valves are used to isolate the rear (non-driving) wheels of the vehicle from the hydraulic pressure that the HCU pump/motor is sending to the front (driving) wheels when traction control is being applied. The rear brakes need to be isolated from the master cylinder when traction control is being applied so the rear wheels do not drag. For more information on the TC and shuttle valves, see TRACTION CONTROL SYSTEM in this section.

BRAKE FLUID ACCUMULATORS

There are two fluid accumulators in the HCU: one for the primary hydraulic circuit, and one for the secondary hydraulic circuit. Each hydraulic circuit uses a 3 cc accumulator.

The fluid accumulators temporarily store brake fluid that is removed from the wheel brakes during an ABS cycle. This stored fluid is used by the pump/motor to provide build pressure for the brake hydraulic system. When the antilock stop is complete, the accumulators are drained by the pump/motor.

There are two noise dampening chambers in the HCU on this vehicle equipped with traction control.

PUMP/MOTOR

There are two pump assemblies in the HCU: one for the primary hydraulic circuit, and one for the secondary hydraulic circuit. Both pumps are driven by a

DESCRIPTION AND OPERATION (Continued)

common electric motor (Fig. 2). This DC-type motor is integral to the HCU and is controlled by the CAB.

The pump/motor provides the extra amount of brake fluid needed during antilock braking. Brake fluid is released to the accumulators when the outlet valve is opened during an antilock stop. The pump mechanism consists of two opposing pistons operated by an eccentric camshaft. In operation, these pistons are used to purge fluid from the accumulators back into the master cylinder circuits. When the antilock stop is complete, the pump/motor drains the accumulators.

The pump motor is also used to build pressure when the system goes into traction control mode. For more information, refer to TRACTION CONTROL SYSTEM in this section.

The CAB may turn on the pump/motor when an antilock stop is detected. The pump/motor continues to run during the antilock stop and is turned off after the stop is complete. Under some conditions, the pump/motor runs to drain the accumulators during the next drive-off.

The pump/motor is not a serviceable item; if it requires replacement, the HCU must be replaced.

ABS FUSES

DESCRIPTION

The ABS fuse and the ABS pump/motor fuse are located in the power distribution center (PDC). Refer to the sticker on the inside of the PDC cover for the location of these fuses. The PDC is located on the driver's side of the engine compartment between the back of the air cleaner and the brake master cylinder.

The CAB fuse can be found in the fuse junction block under the instrument panel.

AMBER ABS WARNING INDICATOR

DESCRIPTION

The amber ABS warning indicator is located in the instrument cluster. The purpose of the warning lamp is discussed in detail below in OPERATION.

OPERATION

When the ignition key is turned to the ON position, the amber ABS warning indicator is lit until the CAB completes its self-tests and turns off the indicator lamp (approximately 4 seconds). The amber ABS warning indicator will illuminate when the CAB detects a condition that results in the shutdown of ABS function. The CAB sends a message to the mechanical instrument cluster (MIC) instructing it to turn on the amber ABS warning indicator.

Under most conditions, when the amber ABS warning indicator is on, only the ABS function of the brake system is affected; The electronic brake distribution (EBD), the base brake system and the ability to stop the vehicle are not affected.

WHEEL SPEED SENSOR (WSS) AND TONE WHEEL

DESCRIPTION

The Mark 20e system uses two wire wheel speed sensors, known as active wheel speed sensors. The sensors use an electronic principle known as magnetoresistive to help increase performance and durability. The sensors convert wheel speed into a small digital signal. A wheel speed sensor is used at each wheel. The gear (tooth) type tone wheel serves as the trigger mechanism for each sensor. At each wheel of the vehicle there is one wheel speed sensor and one tone wheel.

The front wheel speed sensors are attached to bosses in the steering knuckle (Fig. 3) (Fig. 4). The tone wheel is an integral part of the outboard constant velocity joint located in the front axle shaft.

The rear wheel speed sensors are mounted through the disc brake adapter (Fig. 5) (Fig. 6). The rear tone wheels are mounted to and rotate with the hub and bearing assemblies.

The WSS air gaps are not adjustable. The initial factory WSS air gap specification can be found in SPECIFICATIONS. Each WSS is serviced individually. The tone wheels are serviced as an assembly with the hub and bearing assemblies.

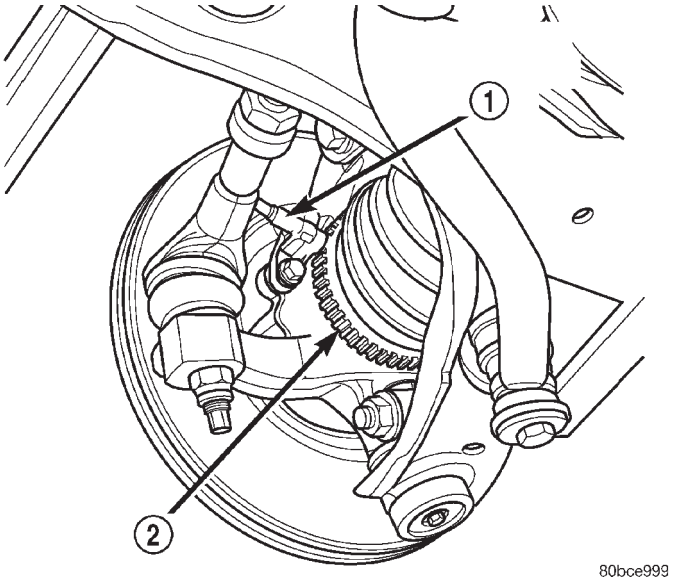

Fig. 3 Left Front Wheel Speed Sensor

1 – LEFT FRONT WHEEL SPEED SENSOR
2 – TONE WHEEL

OPERATION

The CAB sends 12 volts to power an Integrated Circuit (IC) in the sensor. The IC supplies a constant

DESCRIPTION AND OPERATION (Continued)

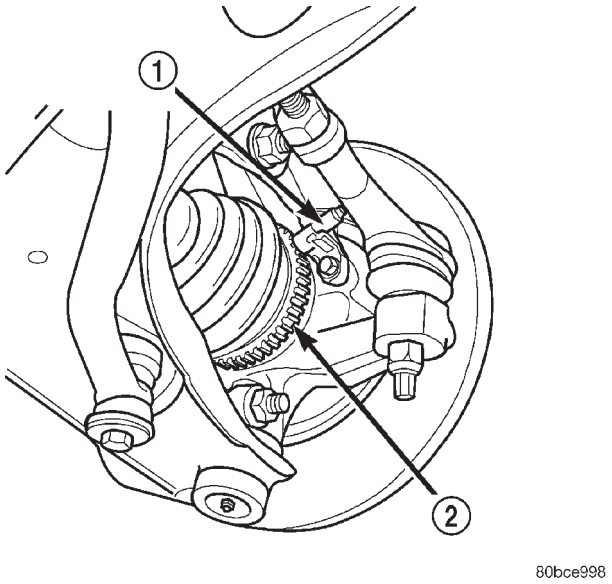

Fig. 4 Right Front Wheel Speed Sensor

1 – RIGHT FRONT WHEEL SPEED SENSOR
2 – TONE WHEEL

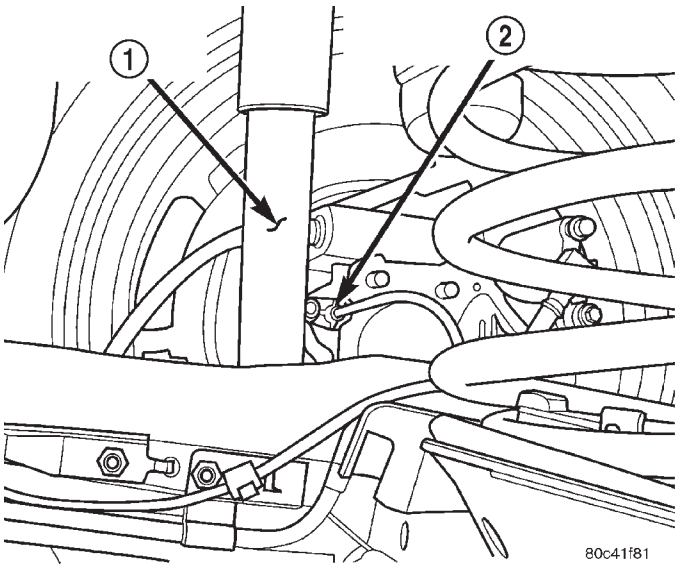

Fig. 6 Right Rear Wheel Speed Sensor

1 – SHOCK ABSORBER
2 – RIGHT REAR WHEEL SPEED SENSOR

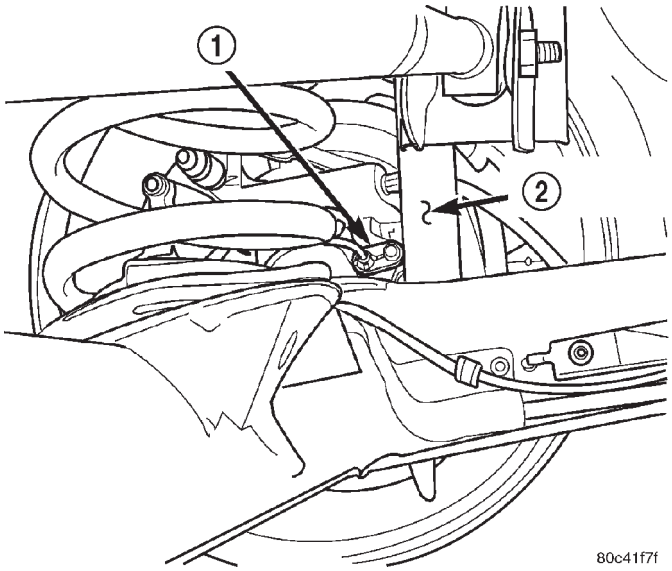

Fig. 5 Left Rear Wheel Speed Sensor

1 – LEFT REAR WHEEL SPEED SENSOR
2 – SHOCK ABSORBER

7 mA power supply to the CAB. The relationship of the tooth on the tone wheel to the permanent magnet in the sensor, signals the IC to enable a second 7 mA power supply. The output of the sensor, sent to the CAB, is a DC voltage signal with changing voltage and current levels. The ground for the IC and the current sense circuit is provided by the CAB.

When a valley of the tone wheel is aligned with the sensor, the voltage signal is approximately 0.8 volts and a constant 7 mA current is sent to the CAB. As the tone wheel rotates, the tooth shifts the magnetic field and the IC enables a second 7 mA current source. The CAB senses a voltage signal of approximately 1.6 volts and 14 mA. The CAB measures the amperage of the digital signal for each wheel. The resulting signal is interpreted by the ABS CAB as the wheel speed.

ELECTRONIC BRAKE DISTRIBUTION (EBD)

DESCRIPTION

Vehicles equipped with ABS use electronic brake distribution (EBD) to balance front-to-rear braking. The EBD is used in place of a rear proportioning valve. The EBD system uses the ABS system to control the slip of the rear wheels in partial braking range. The braking force of the rear wheels is controlled electronically by using the inlet and outlet valves located in the integrated control unit (ICU).

OPERATION

Upon entry into EBD the inlet valve for the rear brake circuit is switched on so that the fluid supply from the master cylinder is shut off. In order to decrease the rear brake pressure, the outlet valve for the rear brake circuit is pulsed. This allows fluid to enter the low pressure accumulator (LPA) in the hydraulic control unit (HCU) resulting in a drop in fluid pressure to the rear brakes. In order to increase the rear brake pressure, the outlet valve is switched off and the inlet valve is pulsed. This increases the pressure to the rear brakes. This back-and-forth process will continue until the required slip difference is obtained. At the end of EBD braking (brakes

DESCRIPTION AND OPERATION (Continued)

released) the fluid in the LPA drains back to the master cylinder by switching on the outlet valve and draining through the inlet valve check valve. At the same time the inlet valve is switched on in case of another brake application.

The EBD will remain functional during many ABS fault modes. If both the red BRAKE, and amber ABS warning indicators are illuminated, the EBD may not be functioning.

TRACTION CONTROL SYSTEM

DESCRIPTION

Traction control reduces wheel slip and maintains traction at the driving wheels at speeds below 56 km/h (35 mph) when road surfaces are slippery. The traction control system reduces wheel slip by braking the wheel that is losing traction.

The traction control system may be turned off or on by depressing the traction control switch button located on the instrument panel (Fig. 7).

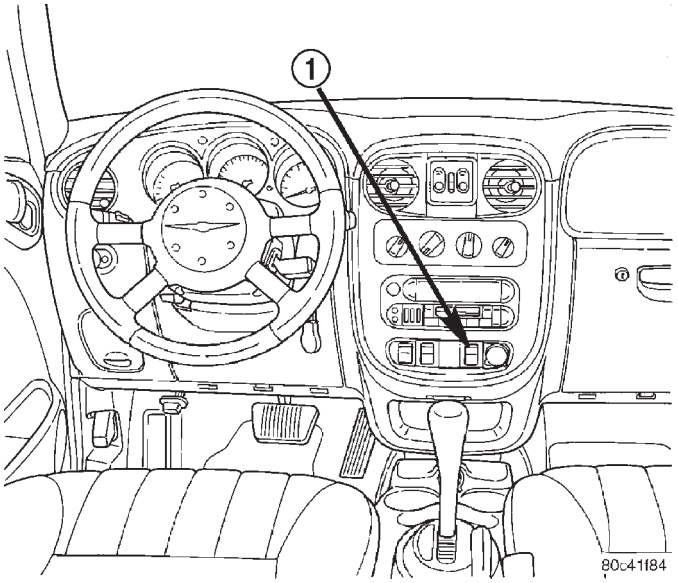

Fig. 7 Traction Control Switch

1 – TRACTION CONTROL SWITCH

OPERATION

The CAB monitors wheel speed. During acceleration, if the CAB detects front (drive) wheel slip and the brakes are not applied, the CAB enters traction control mode. Traction control operation proceeds in the following order:

(1) Close the normally open traction control (TC) valves.

(2) Start the pump/motor and supply volume and pressure to the front (drive) hydraulic circuit. (The pump/motor runs continuously during traction control operation.)

(3) Open and close the build and decay solenoid valves to maintain minimum wheel slip and maximum traction.

The cycling of the build and decay valves during traction control is similar to that during antilock braking, except the valves work to control wheel spin by applying the brakes, whereas the ABS function is to control wheel skid by releasing the brakes.

Two pressure relief shuttle valves allow pressure and volume to return to the master cylinder reservoir when not consumed by the build and decay valves. These valves are necessary because the pump/motor supplies more volume than the system requires.

If the brakes are applied at anytime during a traction control cycle, the brake lamp switch triggers the control module to switch off traction control.

The traction control function indicator illuminates during a traction control cycle, displaying TRAC on the instrument panel.

The traction control system is enabled at each ignition cycle. It may be turned off by depressing the traction control switch button. The traction control function indicator (TRAC OFF) illuminates immediately upon depressing the button. Pressing this button again or turning off and restarting the vehicle will enable the traction control system.

If the CAB calculates that the brake temperatures are high, the traction control system becomes inoperative until a time-out period has elapsed. During this “thermo-protection mode,” the traction control function indicator illuminates TRAC OFF; note that no trouble code is registered.

HYDRAULIC CIRCUITS AND VALVE OPERATION

The hydraulic shuttle valves control the flow of pressurized brake fluid to the wheel brakes during the different modes of ABS braking. The following paragraphs explain how this works. For purposes of explanation only, it is assumed that only the right front wheel is experiencing antilock braking; the following diagrams show only the right front wheel in an antilock braking operation.

DESCRIPTION AND OPERATION (Continued)

NORMAL BRAKING HYDRAULIC CIRCUIT, SOLENOID VALVE, AND SHUTTLE VALVE FUNCTION (ABS WITH TRACTION CONTROL)

The hydraulic diagram (Fig. 8) shows a vehicle with traction control in the normal braking mode. The diagram shows no wheel spin or slip occurring relative to the speed of the vehicle. The driver is applying the brake pedal; this builds pressure in the brake hydraulic system to engage the brakes and stop the vehicle. The hydraulic shuttle valve closes with every brake pedal application so pressure is not created at the inlet to the pump/motor.

ABS BRAKING HYDRAULIC CIRCUIT, SOLENOID VALVE, AND SHUTTLE VALVE FUNCTION (ABS WITH TRACTION CONTROL)

The hydraulic diagram (Fig. 9) shows the vehicle in the ABS braking mode. The diagram shows one wheel is slipping because the driver is attempting to stop the vehicle at a faster rate than is allowed by the surface on which the tires are riding.

- The hydraulic shuttle valve closes upon brake application so that the pump/motor cannot siphon brake fluid from the master cylinder.
- The normally open and normally closed valves modulate (build/decay) the brake hydraulic pressure as required.
- The pump/motor is switched on so that the brake fluid from the low pressure accumulators is returned to the master cylinder circuits.
- The brake fluid is routed to either the master cylinder or the wheel brake depending on the position of the normally open valve.

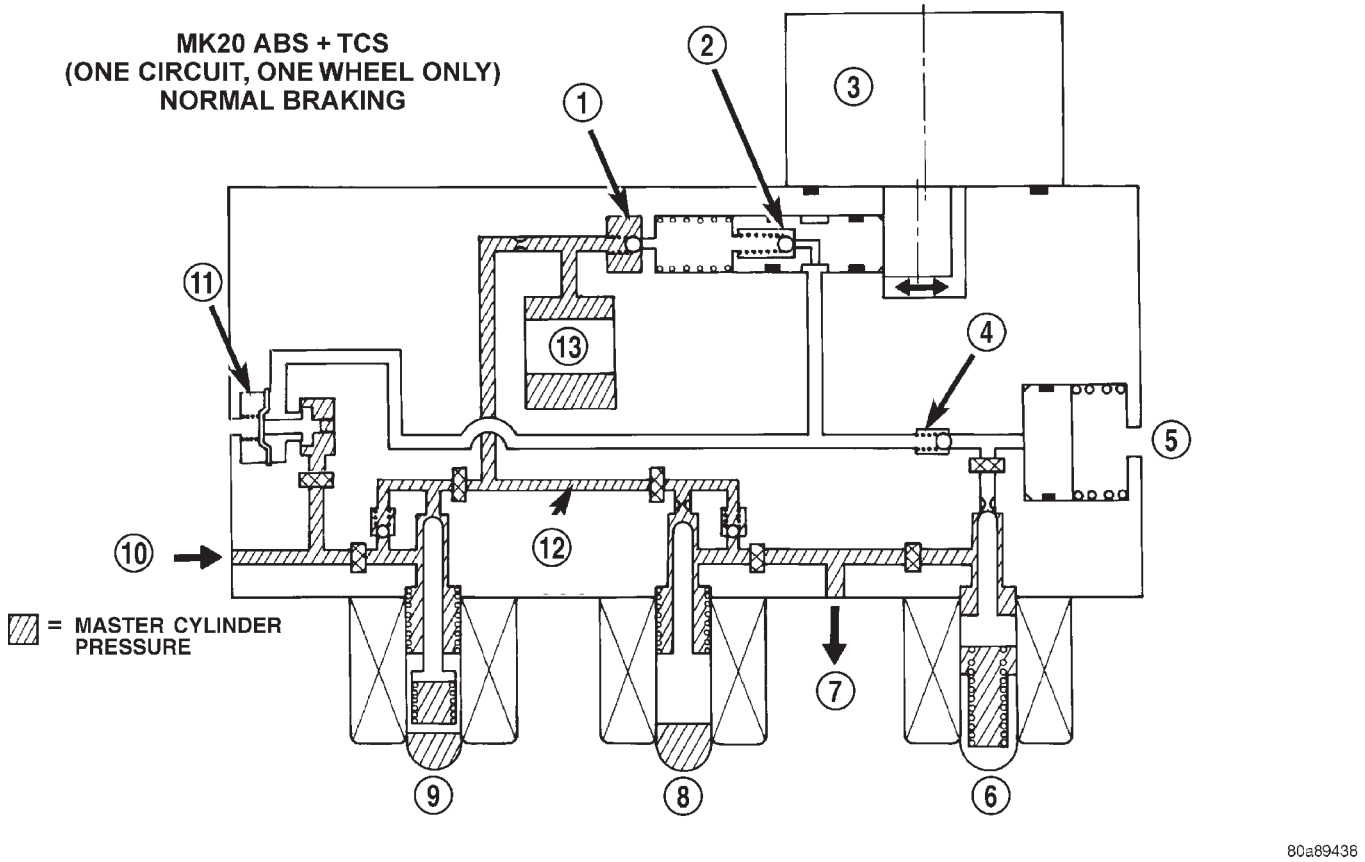

Fig. 8 ABS With Traction Control - Normal Braking Hydraulic Circuit

1 – OUTLET VALVE
2 – PUMP PISTON
3 – PUMP MOTOR (OFF)
4 – SUCTION VALVE
5 – LOW PRESSURE ACCUMULATOR
6 – NORMALLY CLOSED VALVE (OFF)
7 – TO RIGHT FRONT WHEEL
8 – NORMALLY OPEN VALVE (OFF)
9 – NORMALLY OPEN ASR VALVE (OFF)
10 – FROM MASTER CYLINDER
11 – HYDRAULIC SHUTTLE VALVE
12 – MASTER CYLINDER PRESSURE
13 – NOISE DAMPER CHAMBER

DESCRIPTION AND OPERATION (Continued)

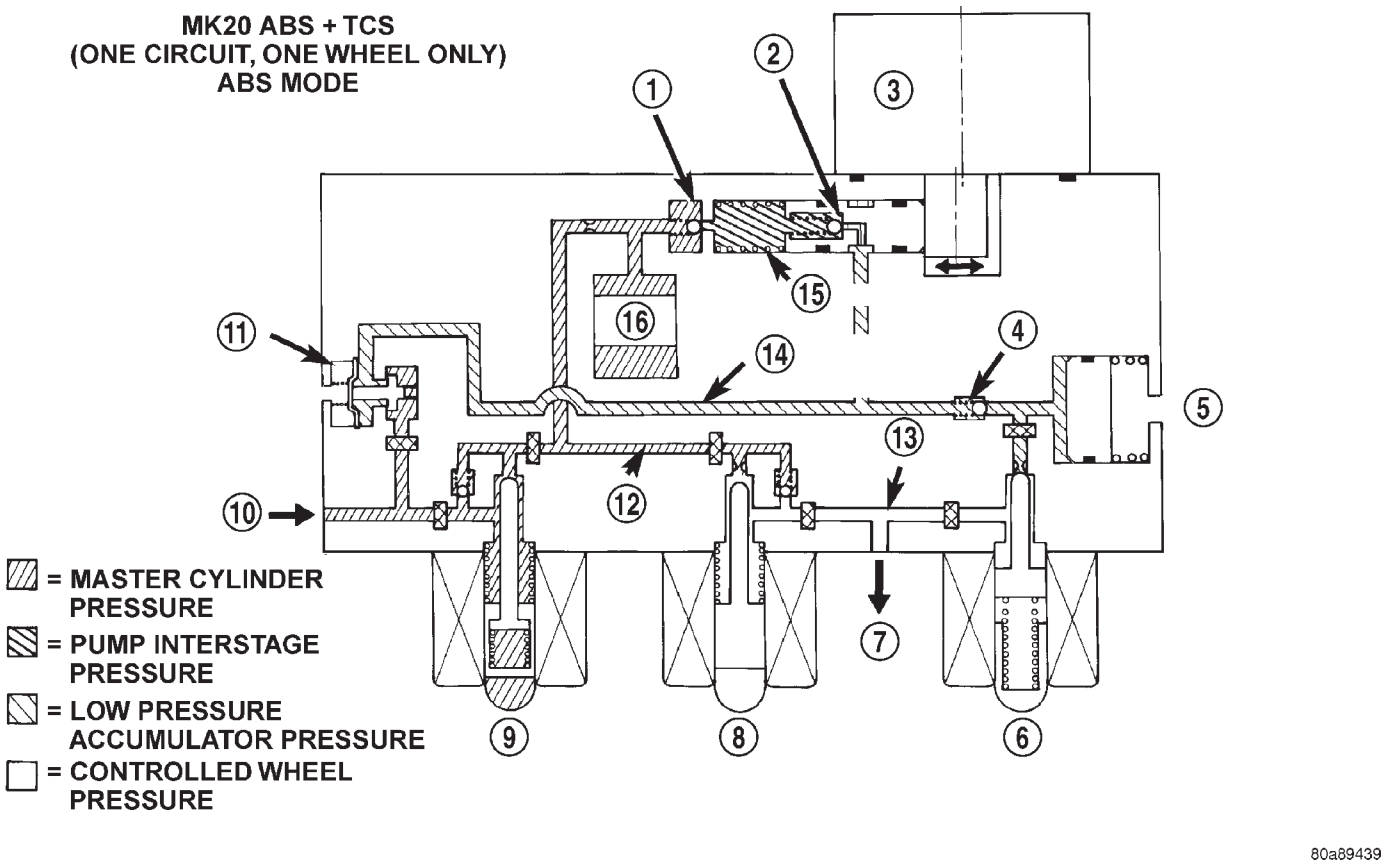

Fig. 9 ABS With Traction Control - ABS Braking Hydraulic Circuit

1 – OUTLET VALVE
2 – PUMP PISTON
3 – PUMP MOTOR (ON)
4 – SUCTION VALVE
5 – LOW PRESSURE ACCUMULATOR
6 – NORMALLY CLOSED VALVE (MODULATING)
7 – TO RIGHT FRONT WHEEL
8 – NORMALLY OPEN VALVE (MODULATING)
9 – NORMALLY OPEN ASR VALVE (OFF)
10 – FROM MASTER CYLINDER
11 – HYDRAULIC SHUTTLE VALVE
12 – MASTER CYLINDER PRESSURE
13 – CONTROLLED WHEEL PRESSURE
14 – LOW PRESSURE ACCUMULATOR PRESSURE
15 – PUMP INTERSTAGE PRESSURE
16 – NOISE DAMPER CHAMBER

ABS TRACTION CONTROL HYDRAULIC CIRCUIT, SOLENOID VALVE, AND SHUTTLE VALVE FUNCTION (ABS WITH TRACTION CONTROL)

The hydraulic diagram (Fig. 10) shows the vehicle in the traction control (TC) mode. The diagram shows a drive wheel is spinning and brake pressure is required to reduce its speed.

- The normally open TC (ASR) valve is energized to isolate the brake fluid being pumped from the master cylinder and to isolate the driven wheel.
- The normally open TC (ASR) valve bypasses the pump output back to the master cylinder at a fixed pressure setting.
- The normally open and normally closed valves modulate (build/decay) the brake pressure as required to the spinning wheel.

DESCRIPTION AND OPERATION (Continued)

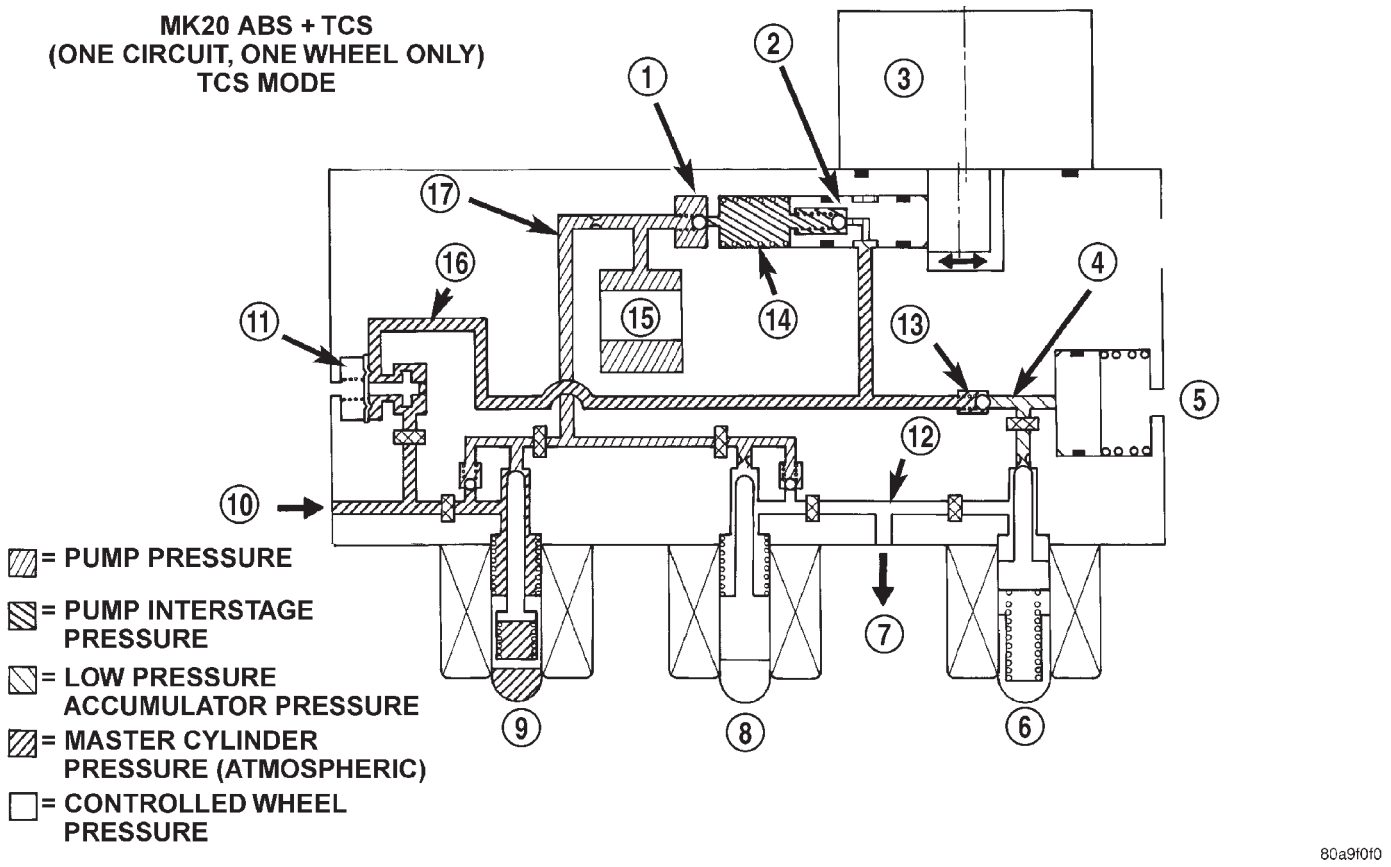

Fig. 10 Traction Control Hydraulic Circuit

1 – OUTLET VALVE
2 – PUMP PISTON
3 – PUMP MOTOR (ON)
4 – LOW PRESSURE ACCUMULATOR PRESSURE
5 – LOW PRESSURE ACCUMULATOR
6 – NORMALLY CLOSED VALVE (MODULATING)
7 – TO RIGHT FRONT WHEEL (SPINNING)
8 – NORMALLY OPEN VALVE (MODULATING)
9 – NORMALLY OPEN ASR VALVE ON (REGULATING)
10 – FROM MASTER CYLINDER
11 – HYDRAULIC SHUTTLE VALVE
12 – CONTROLLED WHEEL PRESSURE
13 – SUCTION VALVE
14 – PUMP INTERSTAGE PRESSURE
15 – NOISE DAMPER CHAMBER
16 – MASTER CYLINDER PRESSURE
17 – PUMP PRESSURE

DIAGNOSIS AND TESTING

SERVICE WARNINGS AND CAUTIONS

The ABS uses an electronic control module, the CAB. This module is designed to withstand normal current draws associated with vehicle operation. Care must be taken to avoid overloading the CAB circuits.

CAUTION: In testing for open or short circuits, do not ground or apply voltage to any of the circuits unless instructed to do so for a diagnostic procedure.

CAUTION: These circuits should only be tested using a high impedance multi-meter or the DRB scan tool as described in this section. Power should never be removed or applied to any control module with the ignition in the ON position. Before removing or connecting battery cables, fuses, or connectors, always turn the ignition to the OFF position.

CAUTION: Use only factory wiring harnesses. Do not cut or splice wiring to the brake circuits. The addition of after-market electrical equipment (car phone, radar detector, citizen band radio, trailer lighting, trailer brakes, etc.) on a vehicle equipped with antilock brakes may affect the function of the antilock brake system.

DIAGNOSIS AND TESTING (Continued)

ABS GENERAL DIAGNOSTICS INFORMATION

This section contains information necessary to diagnose the antilock brake system. Specifically, this section should be used to help diagnose conditions which result in any of the following:

(1) amber ABS warning lamp turned on.

(2) brakes lock-up on hard application.

Diagnosis of base brake conditions that are obviously mechanical in nature should be directed to BASE BRAKE SYSTEM at the beginning of this group.

Many ABS conditions judged to be a problem by the driver may be normal operating conditions. See ABS OPERATION in the DESCRIPTION AND OPERATION section of this group to become familiarized with the normal characteristics of this antilock brake system.

ABS WIRING DIAGRAM INFORMATION

During the diagnosis and testing of the antilock brake system it may become necessary to reference the wiring diagrams covering the antilock brake system and its components. For wiring diagrams refer to GROUP 8W of this service manual. It will provide you with the wiring diagrams and the circuit description and operation information covering the antilock brake system.

ABS VEHICLE TEST DRIVE

Most ABS complaints will require a test drive to properly duplicate and diagnose the condition.

WARNING: CONDITIONS THAT RESULT IN TURNING ON THE RED BRAKE WARNING iNDICATOR MAY INDICATE REDUCED BRAKING ABILITY.

Before test driving a brake complaint vehicle, note whether the red BRAKE warning indicator, amber ABS warning indicator, or both are turned on. If it is the red BRAKE warning indicator, there is a brake hydraulic problem that must be corrected before driving the vehicle. Refer to the BASE BRAKE SYSTEM for diagnosis of the red BRAKE warning indicator. If the red brake warning indicator is illuminated, there is also a possibility that there is an ABS problem and the amber ABS warning indicator is not able to illuminate, so the MIC turns on the red Brake warning indicator by default.

If the amber ABS warning indicator is on, test drive the vehicle as described below. While the amber ABS warning indicator is on, the ABS is not functional. The ability to stop the car using the base brake system should not be affected.

If a functional problem of the ABS is determined while test driving the vehicle, refer to the Diagnostic Procedures.

(1) Turn the key to the OFF position and then back to the ON position. Note whether the amber ABS warning indicator continues to stay on. If it does, refer to the diagnostic manual.

(2) If the amber ABS warning indicator goes out, shift into gear and drive the car to a speed of 25 km/h (15 mph) to complete the ABS start-up and drive-off cycles (see ABS ELECTRONIC DIAGNOSIS). If at this time the amber ABS warning lamp comes on, refer to the diagnostic manual.

(3) If the amber ABS warning lamp remains out, drive the vehicle a short distance. Accelerate the vehicle to a speed of at least 64 km/h (40 mph). Bring the vehicle to a complete stop, braking hard enough to cause the ABS to cycle. Again accelerate the vehicle past 40 km/h (25 mph). Refer to the diagnostic manual for further testing of the antilock brake system.

ABS ELECTRONIC DIAGNOSIS

The following information is presented to give the technician a general background on the diagnostic capabilities of the ABS system. Complete electronic diagnosis of the ABS system used on this vehicle is covered in the Diagnostic Procedures.

Electronic diagnosis of the ABS system used on this vehicle is performed using the DRBIII® scan tool. The vehicle's scan tool diagnostic data link connector is located under the steering column lower cover, to the left side of the steering column (Fig. 11).

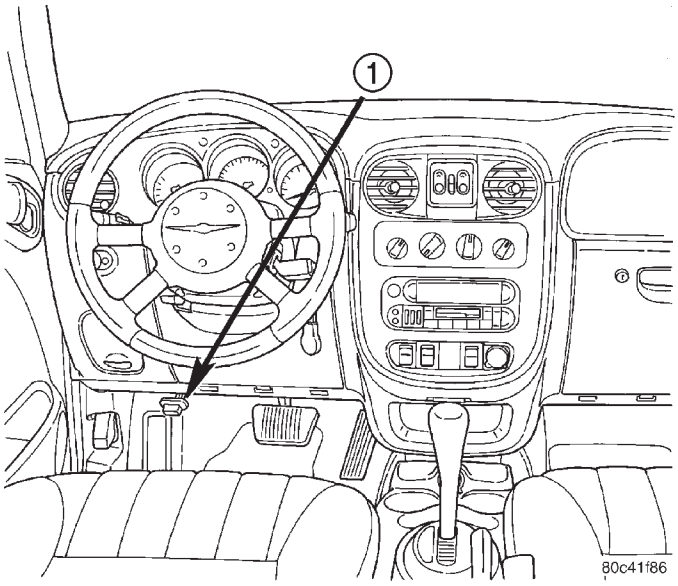

Fig. 11 Data Link Connector Location

1 – DATA LINK CONNECTOR (DLC)

DIAGNOSIS AND TESTING (Continued)

ABS SELF-DIAGNOSIS

The ABS system is equipped with a self-diagnosis capability, which may be used to assist in the isolation of ABS faults. The features are described below.

START-UP CYCLE

The self-diagnosis ABS start-up cycle begins when the ignition switch is turned to the ON position. Electrical checks are completed on ABS components, including the CAB, solenoid continuity, and the relay system operation. During this check the amber ABS warning indicator is turned on for approximately 5 seconds and the brake pedal may emit a popping sound, moving slightly when the solenoid valves are checked.

DRIVE-OFF CYCLE

The first time the vehicle is set in motion after an ignition off/on cycle, the drive-off cycle occurs. This cycle is performed when the vehicle reaches a speed of approximately 20 km/h (12 mph.).

- The pump/motor is briefly activated to verify function. When the pump/motor is briefly activated, a whirling or buzzing sound may be heard by the driver. This sound is normal, indicating the pump/motor is running.
- The wheel speed sensor output correct operating range is verified.

ONGOING TESTS

While the system is operating, these tests are performed on a continuous basis:

- Solenoid continuity
- Wheel speed sensor continuity
- Wheel speed sensor output

DIAGNOSTIC TROUBLE CODES (DTC's)

Diagnostic trouble codes (DTC's) are kept in the controller's memory until either erased by the technician using the DRBIII®, or erased automatically after 3500 miles or 255 ignition key cycles, whichever occurs first. DTC's are retained by the controller even if the ignition is turned off or the battery is disconnected. More than one DTC can be stored at a time. When accessed, the number of occurrences (ignition key cycles) and the DTC that is stored are displayed. Most functions of the CAB and the ABS system can be accessed by the technician for testing and diagnostic purposes using the DRBIII®.

LATCHING VERSUS NON-LATCHING DIAGNOSTIC TROUBLE CODES

Some DTC's detected by the CAB are "latching" codes. The DTC is latched and ABS braking is disabled until the ignition switch is reset. Thus, ABS braking is non-operational even if the original DTC has disappeared. Other DTC's are non-latching. Any warning indicators that are turned on are only turned on as long as the DTC condition exists; as soon as the condition goes away, the amber ABS warning indicator is turned off, although, in most cases, a DTC is set.

INTERMITTENT DIAGNOSTIC TROUBLE CODES

As with virtually any electronic system, intermittent electrical problems in the ABS system may be difficult to accurately diagnose. Most intermittent electrical problems are caused by faulty electrical connections or wiring. A visual inspection should be done before trying to diagnose or service the antilock brake system; this will eliminate unnecessary diagnosis and testing time. Perform a visual inspection for loose, disconnected, damaged, or misrouted wires or connectors; include the following components and areas of the vehicle in the inspection.

(1) Inspect fuses in the power distribution center (PDC) and the wiring junction block. Verify that all fuses are fully inserted into the PDC and wiring junction block. A label on the underside of the PDC cover identifies the locations of the ABS fuses.

(2) Inspect the 25-way electrical connector at the CAB for damaged, spread, or backed-out wiring terminals. Verify that the 25-way connector is fully inserted in the socket of the CAB. Be sure that wires are not stretched tight or pulled out of the connector.

(3) Verify that all the wheel speed sensor connections are secure.

(4) Look for poor mating of connector halves or terminals not fully seated in the connector body.

(5) Check for improperly formed or damaged terminals. All connector terminals in a suspect circuit should be carefully reformed to increase contact tension.

(6) Look for poor terminal-to-wire connections. This requires removing the terminal from the connector body to inspect it.

(7) Verify pin presence in the connector assembly

(8) Check for proper ground connections. Check all ground connections for signs of corrosion, loose fasteners, or other potential defects. Refer to the wiring diagrams for ground locations.

(9) Look for problems with the main power sources of the vehicle. Inspect the battery, generator, ignition circuits and other related relays and fuses.

If a visual check does not find the cause of the problem, operate the car in an attempt to duplicate the condition and record any trouble codes.

Most failures of the ABS disable the ABS function for the entire ignition cycle even if the fault clears before key-off. There are some failure conditions, however, that allow ABS operation to resume during the ignition cycle in which the trouble occurred even if the trouble conditions are no longer present.

DIAGNOSIS AND TESTING (Continued)

The following trouble conditions may result in intermittent illumination of the amber ABS warning indicator.

- Low system voltage. If Low System Voltage is detected by the CAB, the CAB will turn on the amber ABS Warning indicator until normal system voltage is achieved. Once normal voltage is seen at the CAB, normal operation resumes.

Additional possible causes that may result in the illumination of the amber ABS warning indicator are as follows:

- High system voltage. If high system voltage is detected by the CAB, the CAB will turn on the amber ABS warning indicator. If the ignition key is cycled and normal voltage is again detected by the CAB, normal ABS operation resumes and the indicator remains off.
- Any condition that interrupts electrical current to the CAB may cause the amber ABS warning indicator to turn on intermittently.
- If PCI communication between the body controller and the CAB is interrupted, the body controller can turn on the amber ABS warning indicator.

TONE WHEEL

Tone wheels can cause erratic wheel speed sensor signals. Inspect tone wheels for the following possible causes:

- missing, chipped, or broken teeth
- contact with the wheel speed sensor
- wheel speed sensor to tone wheel alignment
- wheel speed sensor to tone wheel clearance
- excessive tone wheel runout
- tone wheel loose on its mounting surface

If a front tone wheel is found to need replacement, the drive shaft must be replaced. No attempt should be made to replace just the tone wheel. Refer to the DIFFERENTIAL AND DRIVELINE group in this service manual for removal and installation.

If a rear tone wheel is found to need replacement, the rear hub and bearing must be replaced. No attempt should be made to replace just the tone wheel. Refer to the SUSPENSION group in this service manual for removal and installation.

If wheel speed sensor to tone wheel contact is evident, determine the cause and correct it before replacing the wheel speed sensor or tone wheel.

Check the gap between the speed sensor head and the tone wheel to ensure it is within specifications. Refer to SPECIFICATIONS in this section of the service manual for the minimum and maximum wheel speed sensor to tone wheel clearance.

Excessive wheel speed sensor runout can cause erratic wheel speed sensor signals. Refer to SPECIFICATIONS in this section of the service manual for the maximum allowed tone wheel runout. If tone wheel runout is excessive, determine if it is caused by a defect in the driveshaft assembly or hub and bearing. Replace as necessary.

Tone wheels are pressed onto their mounting surfaces and should not rotate independently from the mounting surface. Replacement of the front driveshaft or rear hub and bearing is necessary.

BRAKE FLUID CONTAMINATION

Indications of fluid contamination are swollen or deteriorated rubber parts. Swelling indicates the presence of petroleum in the brake fluid.

To test for contamination, put a small amount of drained brake fluid in clear glass jar. If the fluid separates into layers, there is mineral oil or other fluid contamination of the brake fluid.

If the brake fluid is contaminated, drain and thoroughly flush the brake system. Replace all the rubber parts or components containing rubber coming into contact with the brake fluid including: the master cylinder; proportioning valves; caliper seals; wheel cylinder seals; ABS hydraulic control unit; and all hydraulic fluid hoses.

SERVICE PROCEDURES

BRAKE FLUID LEVEL CHECKING

CAUTION: Use only Mopar brake fluid or an equivalent from a tightly sealed container. Brake fluid must conform to DOT 3 specifications. Do not use petroleum-based fluid because seal damage in the brake system will result.

Refer to SERVICE PROCEDURES in the BASE BRAKE SYSTEM section in this group for the proper procedure to check and adjust the brake fluid level in the master cylinder fluid reservoir.

ANTILOCK BRAKE SYSTEM BLEEDING

The base brake's hydraulic system must be bled anytime air enters the hydraulic system. The ABS though, particularly the ICU (HCU), should only be bled when the HCU is replaced or removed from the vehicle. The ABS must always be bled anytime it is suspected that the HCU has ingested air. Under most circumstances that require the bleeding of the brakes hydraulic system, only the base brake hydraulic system needs to be bled.

It is important to note that excessive air in the brake system will cause a soft or spongy feeling brake pedal.

During the brake bleeding procedure, be sure the brake fluid level remains close to the FULL level in the master cylinder fluid reservoir. Check the fluid

SERVICE PROCEDURES (Continued)

level periodically during the bleeding procedure and add DOT 3 brake fluid as required.

The ABS must be bled as two independent braking systems. The non-ABS portion of the brake system with ABS is to be bled the same as any non-ABS system.

The ABS portion of the brake system must be bled separately. Use the following procedure to properly bleed the brake hydraulic system including the ABS.

BLEEDING

When bleeding the ABS system, the following bleeding sequence must be followed to insure complete and adequate bleeding.

(1) Make sure all hydraulic fluid lines are installed and properly torqued.

(2) Connect the DRBIII® scan tool to the diagnostics connector. The diagnostic connector is located under the lower steering column cover to the left of the steering column.

(3) Using the DRBIII®, check to make sure the CAB does not have any fault codes stored. If it does, clear them using the DRBIII®.

WARNING: WHEN BLEEDING THE BRAKE SYSTEM WEAR SAFETY GLASSES. A CLEAR BLEED TUBE MUST BE ATTACHED TO THE BLEEDER SCREWS AND SUBMERGED IN A CLEAR CONTAINER FILLED PART WAY WITH CLEAN BRAKE FLUID. DIRECT THE FLOW OF BRAKE FLUID AWAY FROM YOURSELF AND THE PAINTED SURFACES OF THE VEHICLE. BRAKE FLUID AT HIGH PRESSURE MAY COME OUT OF THE BLEEDER SCREWS WHEN OPENED.

(4) Bleed the base brake system using the standard pressure or manual bleeding procedure as outlined in SERVICE PROCEDURES in the BASE BRAKE SYSTEM section.

(5) Using the DRBIII®, select ANTILOCK BRAKES, followed by MISCELLANEOUS, then BLEED BRAKES. Follow the instructions displayed. When the scan tool displays TEST COMPLETED, disconnect the scan tool and proceed.

(6) Bleed the base brake system a second time. Check brake fluid level in the reservoir periodically to prevent emptying, causing air to enter the hydraulic system.

(7) Fill the master cylinder reservoir to the full level.

(8) Test drive the vehicle to be sure the brakes are operating correctly and that the brake pedal does not feel spongy.

MASTER CYLINDER BLEEDING

(1) Clamp the master cylinder in a vise.

(2) Attach Master Cylinder Bleed Tube, Special Tool 8358-1, to the primary port of the master cylinder and tighten in place (Fig. 12). Attach Master Cylinder Bleed Tube, Special Tool 8358-2, to the secondary port of the master cylinder and tighten in place. Position the other end of the tubes into the master cylinder reservoir so their outlets are below the surface of the brake fluid in the reservoir when filled.

(3) Fill the brake fluid reservoir with Mopar brake fluid, or an equivalent conforming to DOT 3 specifications.

(4) Using a wooden dowel as a pushrod (Fig. 12), press the pistons inward slowly applying brake pressure, then release the pressure, allowing the pistons to return to the released position. Repeat this several times until all air bubbles are expelled out of the tubes and master cylinder bore.

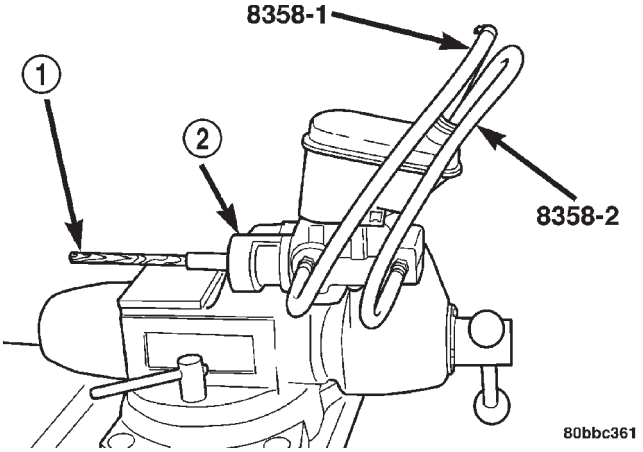

Fig. 12 Bleeding Master Cylinder

1 – WOODEN DOWEL
2 – MASTER CYLINDER

(5) Remove the bleed tubes from the master cylinder and plug the outlet ports.

(6) Install the fill cap on the reservoir.

(7) Remove the master cylinder from the vise.

NOTE: It is not necessary to bleed the entire hydraulic system after replacing just the master cylinder unless the brake system has been open to air for an excessive amount of time or air is present in the lines. Only the master cylinder must be bled and filled.

REMOVAL AND INSTALLATION

SERVICE WARNINGS AND CAUTIONS

Review this entire section prior to performing any mechanical work on a vehicle equipped with ABS.

REMOVAL AND INSTALLATION (Continued)

This section contains information on precautions pertaining to potential component damage, vehicle damage and personal injury which could result when servicing an ABS equipped vehicle.

CAUTION: Only the recommended jacking or hoisting positions for this vehicle are to be used whenever it is necessary to lift a vehicle. Failure to raise a vehicle from the recommended locations could result in lifting a vehicle by the hydraulic control unit mounting bracket. Lifting a vehicle by the hydraulic control unit mounting bracket will result in damage to the mounting bracket and the hydraulic control unit.

CAUTION: An attempt to remove or disconnect certain system components may result in improper system operation. Only those components with approved removal and installation procedures in this manual should be serviced.

CAUTION: Brake fluid will damage painted surfaces. If brake fluid is spilled on any painted surfaces, wash off with water immediately.

CAUTION: When performing any service procedure on a vehicle equipped with ABS do not apply a 12-volt power source to the ground circuit of the pump motor in the HCU. Doing this will damage the pump motor and will require replacement of the entire HCU.

CAUTION: If welding work is to be performed on the vehicle, using an electric arc welder, the CAB connector should be disconnected during the welding operation.

CAUTION: The CAB 25-way connector should never be connected or disconnected with the ignition switch in the ON position.

Many components of the ABS System are not serviceable and must be replaced as an assembly. Do not disassemble any component which is not designed to be serviced.

MASTER CYLINDER

NOTE: Before proceeding with this procedure, review SERVICE WARNINGS AND CAUTIONS at the beginning of REMOVAL AND INSTALLATION in this section.

REMOVAL

CAUTION: The vacuum in the power brake booster must be pumped down before removing the master cylinder to prevent the booster from sucking in any contamination. This can be done by pumping the brake pedal while the engine is not running until a firm brake pedal is achieved.

(1) With the engine not running, pump the brake pedal 4-5 strokes until the pedal feel is firm.

(2) Unclip the air cleaner cover (two clips) and move the cover aside.

(3) Remove the air cleaner housing by pulling straight up.

(4) Disconnect the negative (ground) cable from the battery and isolate the cable.

(5) Unlatch the power distribution center, lift it up, and move it to the side.

(6) Remove the vehicle wiring harness connector from brake fluid level switch in master cylinder brake fluid reservoir (Fig. 13).

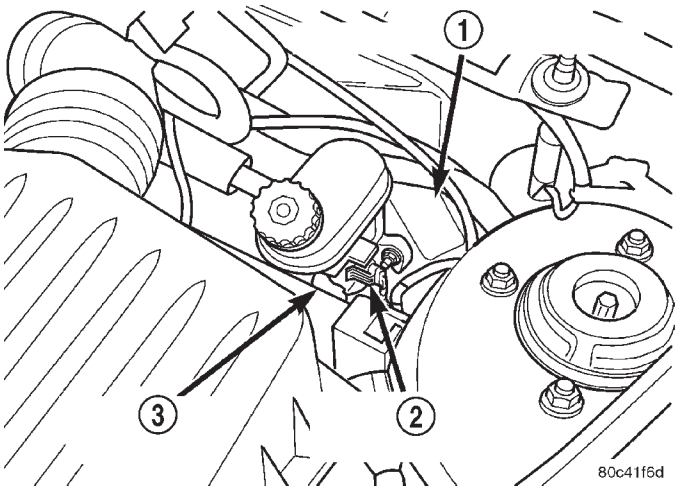

Fig. 13 Master Cylinder

1 – POWER BRAKE BOOSTER
2 – BRAKE FLUID LEVEL SWITCH
3 – MASTER CYLINDER

(7) Disconnect the two brake tubes from the master cylinder primary and secondary ports (Fig. 14). Install plugs at all of the open brake tube outlets on the master cylinder.

(8) Clean the area around where the master cylinder attaches to the power brake booster using a suitable brake cleaner such as Mopar Brake Parts Cleaner or an equivalent.

(9) Remove the two nuts attaching the master cylinder to the power brake booster.

(10) Slide the master cylinder straight out of the power brake booster.

REMOVAL AND INSTALLATION (Continued)

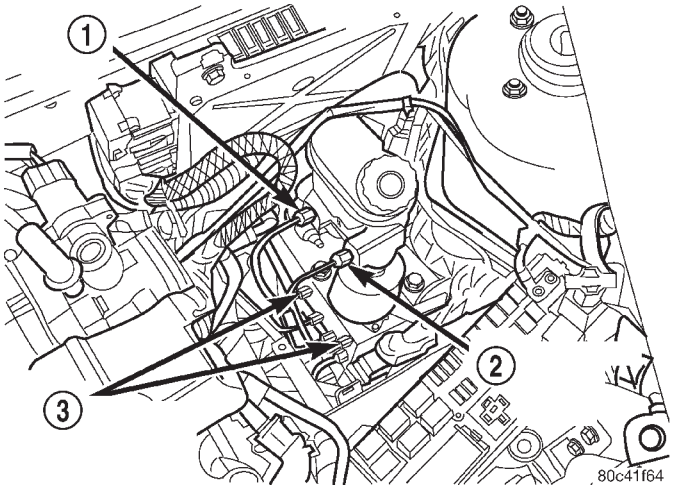

Fig. 14 Brake Tubes At Master Cylinder

1 – PRIMARY BRAKE TUBE
2 – SECONDARY BRAKE TUBE
3 – BRAKE TUBES FROM MASTER CYLINDER

INSTALLATION

NOTE: The master cylinder must be bled before installing it on the vehicle.

(1) Bleed the master cylinder before installing it on the vehicle. Refer to MASTER CYLINDER BLEEDING in SERVICE PROCEDURES.

(2) Wipe the face of the power brake booster clean where the master cylinder seal comes in contact when it's installed. Do not get any cleaner or debris inside the booster.

(3) Position the master cylinder on the studs of the power brake booster, aligning the push rod of the power brake booster with master cylinder piston push rod. Carefully push the master cylinder onto the studs until it contacts the face of the booster.

(4) Install the two master cylinder mounting nuts and tighten each to a torque of 28 N·m (250 in. lbs.).

(5) Connect the two brake tubes to the master cylinder primary and secondary ports (Fig. 14). Tighten all tube nuts to a torque of 17 N·m (145 in. lbs.).

(6) Connect the brake fluid level switch wiring connector.

(7) Install the power distribution center.

(8) Connect the negative (ground) cable on the battery.

(9) Install the air cleaner housing.

(10) Reinstall the air cleaner cover.

(11) Fill the master cylinder to the proper level.

(12) Road test the vehicle to ensure proper operation of the brakes.

INTEGRATED CONTROL UNIT

NOTE: Before proceeding with this procedure, review SERVICE WARNINGS AND CAUTIONS at the beginning of REMOVAL AND INSTALLATION in this section.

REMOVAL

CAUTION: The vacuum in the power brake booster must be pumped down before removing the master cylinder to prevent the booster from sucking in any contamination. This can be done by pumping the brake pedal while the engine is not running until a firm brake pedal is achieved.

(1) With the engine not running, pump the brake pedal 4-5 strokes until the pedal feel is firm.

(2) Unclip the air cleaner cover (two clips) and move the cover aside.

(3) Remove the air cleaner housing by pulling straight up.

(4) Disconnect the negative (ground) cable from the battery and isolate the cable.

(5) Unlatch the power distribution center, lift it up, and move it to the side.

(6) Remove the vehicle wiring harness connector from brake fluid level switch in master cylinder brake fluid reservoir (Fig. 15).

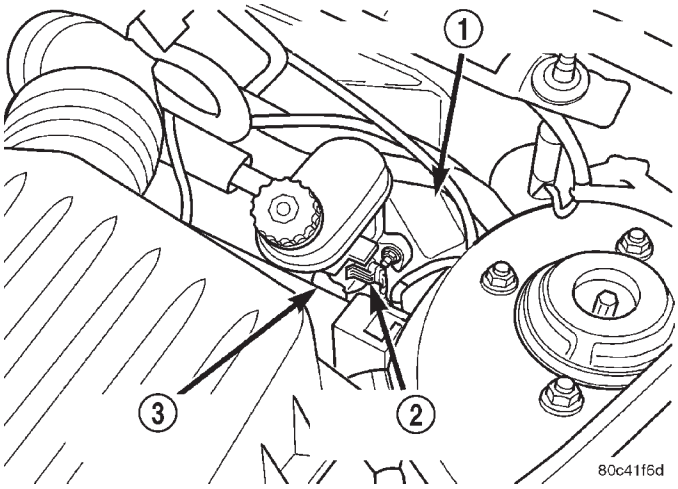

Fig. 15 Master Cylinder

1 – POWER BRAKE BOOSTER
2 – BRAKE FLUID LEVEL SWITCH
3 – MASTER CYLINDER

(7) Tag the brake tubes coming from the master cylinder as primary and secondary (Fig. 16). This is done to avoid mix-up once the tubes are removed from the vehicle.

REMOVAL AND INSTALLATION (Continued)

(8) Disconnect the two brake tubes from the master cylinder primary and secondary ports (Fig. 16). Install plugs at all of the open brake tube outlets on the master cylinder.

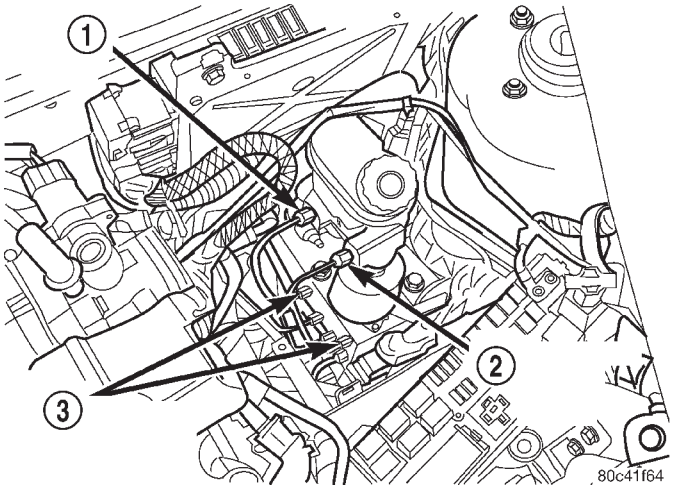

Fig. 16 Primary and Secondary Brake Tubes

1 – PRIMARY BRAKE TUBE
2 – SECONDARY BRAKE TUBE
3 – BRAKE TUBES FROM MASTER CYLINDER

(9) Disconnect and remove the primary and secondary brake tubes coming from the master cylinder at the ICU hydraulic control unit (HCU) (Fig. 16).

(10) Clean the area around where the master cylinder attaches to the power brake booster using a suitable brake cleaner such as Mopar Brake Parts Cleaner or an equivalent.

(11) Remove the two nuts attaching the master cylinder to the power brake booster.

(12) Slide the master cylinder straight out of the power brake booster.

(13) Disconnect the brake tubes going to each individual brake at the HCU (Fig. 17).

(14) Disconnect the 25-way connector from the controller antilock brake (CAB) mounted on the integrated control unit (ICU) and move it out of the way (Fig. 17). The connector is disconnected by pulling outward on the connector lock. This will unlock and raise the 25-way connector out of the socket on the CAB.

(15) Remove the 3 bolts attaching the ICU to its mounting bracket. (Fig. 17).

(16) Remove the ICU from the vehicle.

(17) Refer to DISASSEMBLY AND ASSEMBLY in this section of this group for the procedure on separating and reattaching the CAB to the HCU.

INSTALLATION

(1) Install the ICU onto its mounting bracket.

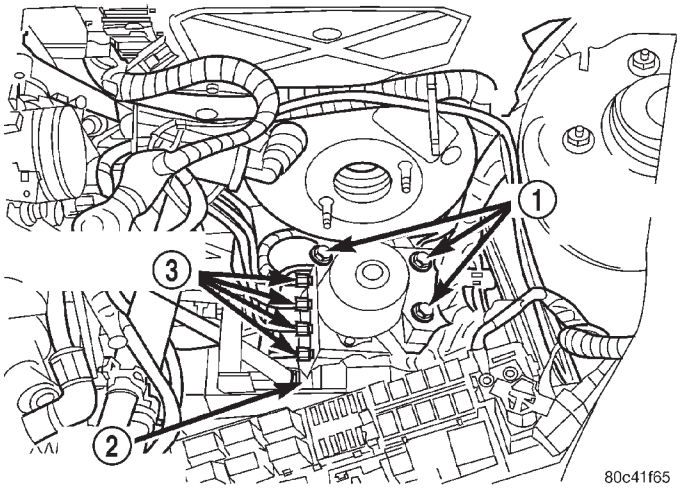

Fig. 17 ICU Connections

1 – ICU MOUNTING BOLTS
2 – CAB CONNECTOR
3 – BRAKE TUBES TO BRAKES

(2) Install the 3 bolts attaching the ICU to the mounting bracket (Fig. 17). Tighten the 3 mounting bolts to a torque of 11 N·m (97 in. lbs.)

CAUTION: Before installing the 25-way connector in the CAB, be sure the seal is properly installed in the connector.

(3) Install the 25-way connector into the socket of the CAB as follows:

- Position the 25-way connector in the socket of the CAB and carefully push it down as far as possible (Fig. 17).
- When the connector is fully seated into the CAB socket, push the connector lock inward. This pulls the connector into the socket of the CAB and locks it in the installed position.

(4) Install the four brake tubes going to the brakes into their respective outlet ports on the ICU HCU (Fig. 17). Using a crow foot on a torque wrench, tighten the four brake tube nuts to a torque of 17 N·m (145 in. lbs.).

(5) Wipe the face of the power brake booster clean where the master cylinder seal comes in contact when it's installed. Do not get any cleaner or debris inside the booster.

(6) Position the master cylinder on the studs of the power brake booster, aligning the push rod of the power brake booster with master cylinder piston push rod. Carefully push the master cylinder onto the studs until it contacts the face of the booster.

(7) Install the two master cylinder mounting nuts and tighten each to a torque of 28 N·m (250 in. lbs.).

REMOVAL AND INSTALLATION (Continued)

NOTE: When installing the brake tubes from the master cylinder on the HCU, the brake tube with the small tube nut is to be installed in the forward-most port on the HCU with the small end going toward the master cylinder secondary port.

(8) Install the primary and secondary brake tubes from the master cylinder onto the HCU (Fig. 16). Do not completely tighten the primary and secondary tubes at this time.

(9) Connect the two brake tubes to the master cylinder primary and secondary ports (Fig. 16).

(10) Using a crow foot on a torque wrench, tighten the primary and secondary brake tube nuts at both the master cylinder and HCU to a torque of 17 N·m (145 in. lbs.).

(11) Connect the brake fluid level switch wiring connector.

(12) Install the power distribution center.

(13) Connect the negative (ground) cable on the battery.

(14) Install the air cleaner housing.

(15) Reinstall the air cleaner cover.

(16) Hook up the DRBIII® to initialize the new CAB.

(17) Bleed the base and the ABS hydraulic systems. Refer to ANTILOCK BRAKE SYSTEM BLEEDING in this section.

(18) Fill the master cylinder to the proper fill level.

(19) Road test the vehicle to ensure proper operation of the base and antilock brake systems.

WHEEL SPEED SENSOR (FRONT)

NOTE: Before proceeding with this procedure, review SERVICE WARNINGS AND CAUTIONS at the beginning of REMOVAL AND INSTALLATION in this section.

REMOVAL

(1) Raise the vehicle. Refer to HOISTING in the LUBRICATION AND MAINTENANCE group for the proper lifting procedure.

(2) Disconnect the wheel speed sensor cable connector from the wiring harness on the inside of the frame rail above the front suspension crossmember (Fig. 18). The connector has a locking tab which that must be pulled back before the connector release tang can be depressed, releasing the connection.

(3) Remove the speed sensor cable grommet from the retaining bracket attached to the brake hose on the outside of the frame rail.

(4) Remove the bolt mounting the wheel speed sensor head to the steering knuckle (Fig. 19).

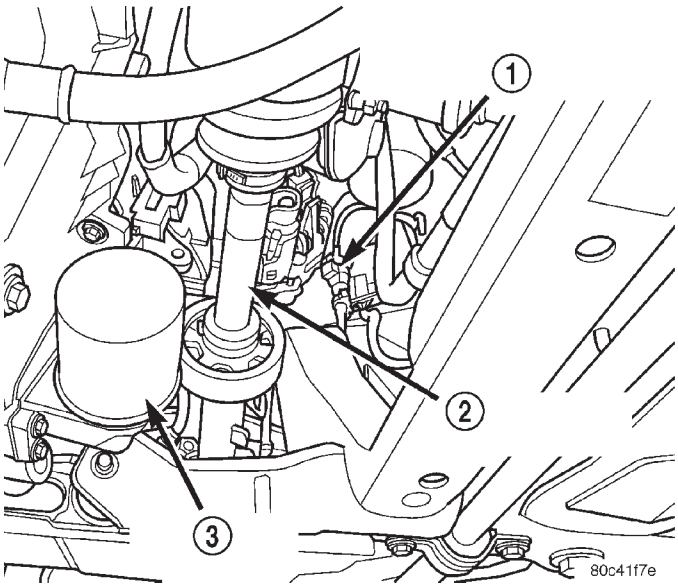

Fig. 18 Wiring Harness Connector

1 – RIGHT FRONT WHEEL SPEED SENSOR CONNECTOR
2 – RIGHT FRONT DRIVESHAFT
3 – ENGINE OIL FILTER

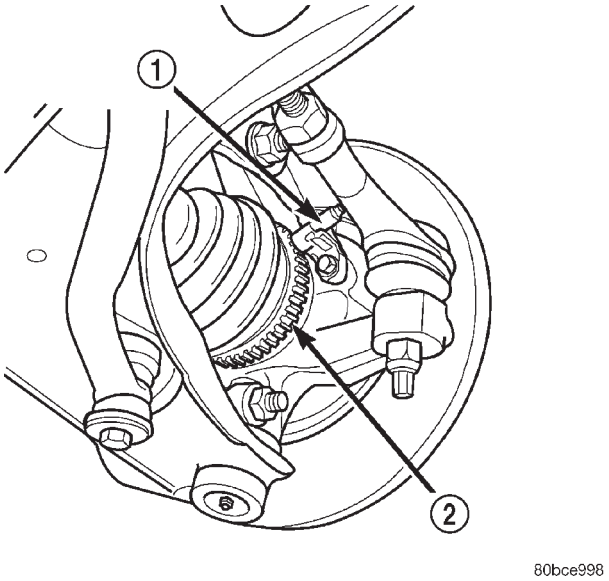

Fig. 19 Wheel Speed Sensor

1 – RIGHT FRONT WHEEL SPEED SENSOR
2 – TONE WHEEL

CAUTION: When removing a wheel speed sensor from the knuckle, do not use pliers on the sensor head. This may damage the sensor head. If the sensor has seized, use a hammer and a punch to tap the edge of the sensor head ear, rocking the sensor side-to-side until free.

(5) Carefully, remove the sensor head from the steering knuckle.

REMOVAL AND INSTALLATION (Continued)

(6) Remove the screw securing the wheel speed sensor to the rear of the strut (Fig. 20). Remove the wheel speed sensor.

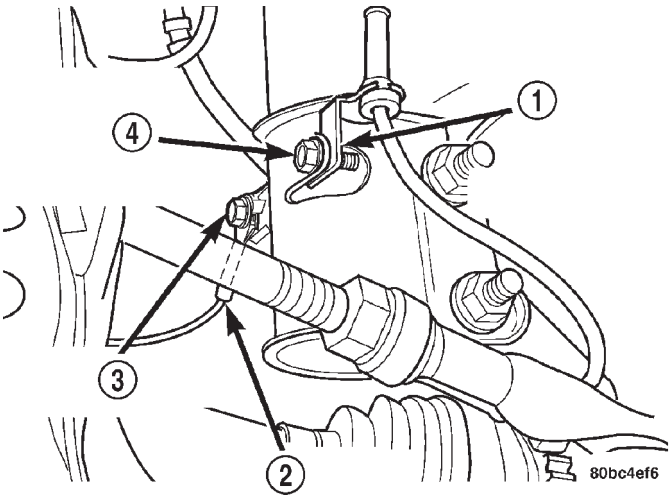

Fig. 20 Wheel Speed Sensor At Strut

1 – ABS WHEEL SPEED SENSOR ROUTING BRACKET (IF EQUIPPED)
2 – GROUND STRAP
3 – GROUND STRAP SCREW
4 – ABS SENSOR BRACKET SCREW (IF EQUIPPED)

INSTALLATION

CAUTION: Failure to install speed sensor cables properly may result in contact with moving parts or an over extension of cables causing an open circuit. Be sure that cables are installed, routed, and clipped properly.

(1) Attach the wheel speed sensor to the strut using the its mounting screw (Fig. 20).

(2) Install the wheel speed sensor head in the steering knuckle (Fig. 19). Install the mounting bolt. Tighten the mounting bolt to a torque of 12 N·m (105 in. lbs.).

(3) From the sensor bracket on the strut, loop the sensor cable upward, then downward at the outside of the frame rail. Install the speed sensor cable grommet onto the retaining bracket attached to the brake hose on the outside of the frame rail.

(4) Loop the wheel speed sensor cable around the bottom of the frame rail and connect it to the wiring harness connector on the inside of the frame rail (Fig. 18). Remember to push in the locking tab on the connector.

(5) Install the tire and wheel assembly.

(6) Lower the vehicle.

(7) Road test vehicle to ensure proper operation of the base brakes and ABS.

WHEEL SPEED SENSOR (REAR)

NOTE: Before proceeding with this procedure, review SERVICE WARNINGS AND CAUTIONS at the beginning of REMOVAL AND INSTALLATION in this section.

REMOVAL

(1) Raise the vehicle. Refer to HOISTING in the LUBRICATION AND MAINTENANCE group for the proper lifting procedure.

(2) Remove the tire and wheel assembly from the vehicle.

(3) Disconnect the wheel speed sensor cable connector from the vehicle wiring harness (Fig. 21). Remove the clip attaching wheel speed sensor cable connector to the vehicle's body.

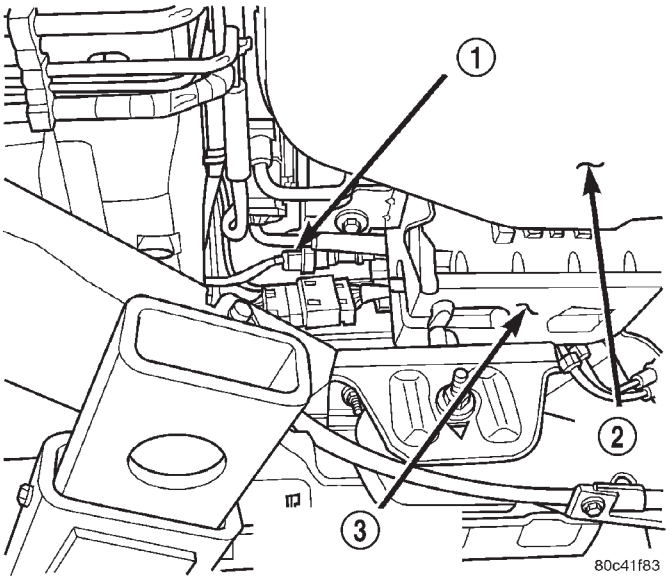

Fig. 21 Wheel Speed Sensor Connector

1 – RIGHT REAR WHEEL SPEED SENSOR CONNECTOR
2 – FUEL TANK
3 – EVAPORATIVE CANISTER

(4) Disconnect the wheel speed sensor cable routing clips running along the brake tube, brake hose and axle trailing arm.

CAUTION: When removing a wheel speed sensor from the rear disc brake adapter, do not use pliers on the sensor head. This may damage the sensor head. If the sensor has seized, use a hammer and a punch to tap the edge of the sensor head ear, rocking the sensor side-to-side until free.

REMOVAL AND INSTALLATION (Continued)

(5) Remove the bolt attaching the wheel speed sensor to the rear disc brake adapter (Fig. 22), then carefully remove the sensor head from the rear disc brake adapter and vehicle.

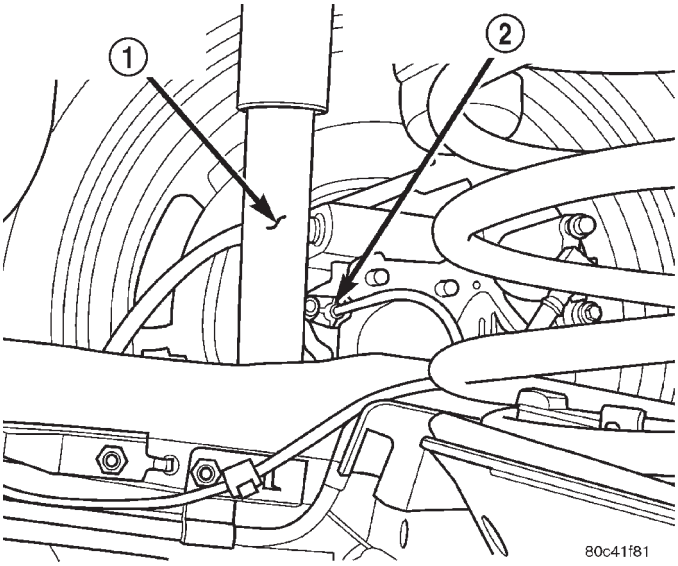

Fig. 22 Wheel Speed Sensor

1 – SHOCK ABSORBER
2 – RIGHT REAR WHEEL SPEED SENSOR

INSTALLATION

CAUTION: Failure to install speed sensor cables properly may result in contact with moving parts or an over extension of cables causing an open circuit. Be sure that cables are installed, routed, and clipped properly.

(1) Install the wheel speed sensor head into the disc brake adapter (Fig. 22).

(2) Install the wheel speed sensor mounting bolt. Tighten the mounting bolt to a torque of 12 N·m (105 in. lbs.).

(3) Install wheel speed sensor cable into the routing clips on the brake tube, brake hose and axle trailing arm.

(4) Connect the wheel speed sensor cable connector into vehicle wiring harness (Fig. 21). Install the clip attaching the wheel speed sensor cable connector to vehicle's body.

(5) Install the tire and wheel assembly on vehicle.

(6) Lower the vehicle.

(7) Road test the vehicle to ensure proper operation of the base brakes and ABS.

DISASSEMBLY AND ASSEMBLY

INTEGRATED CONTROL UNIT

REMOVAL

NOTE: To replace the hydraulic control unit (HCU) or the controller antilock brake (CAB) on this vehicle, the entire integrated control unit (ICU) needs to be removed from the vehicle. The CAB can then be separated from the HCU. Do not attempt to replace the CAB with the ICU mounted in the vehicle.

(1) Remove the ICU from the vehicle. Refer INTEGRATED CONTROL UNIT in the REMOVAL AND INSTALLATION section in this section of the service manual.

(2) Disconnect the pump/motor wiring harness from the CAB (Fig. 23).

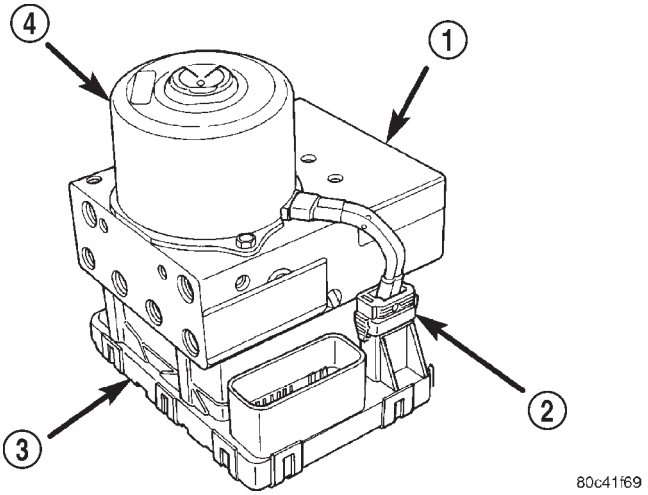

Fig. 23 Pump/Motor To CAB Wiring Harness

1 – HCU
2 – PUMP/MOTOR CONNECTOR
3 – CAB
4 – PUMP/MOTOR

(3) Remove the 4 bolts attaching the CAB to the HCU (Fig. 24).

(4) Remove the CAB from the HCU (Fig. 25).

INSTALLATION

(1) Install the CAB (Fig. 25) on the HCU.

(2) Install the 4 bolts mounting the CAB (Fig. 24) to the HCU. Tighten the CAB mounting bolts to a torque of 2 N·m (17 in. lbs.).

(3) Plug the pump/motor wiring harness into the CAB (Fig. 23).

(4) Install the ICU in the vehicle.

(5) Hook up the DRBIII® to initialize the new CAB.

DISASSEMBLY AND ASSEMBLY (Continued)

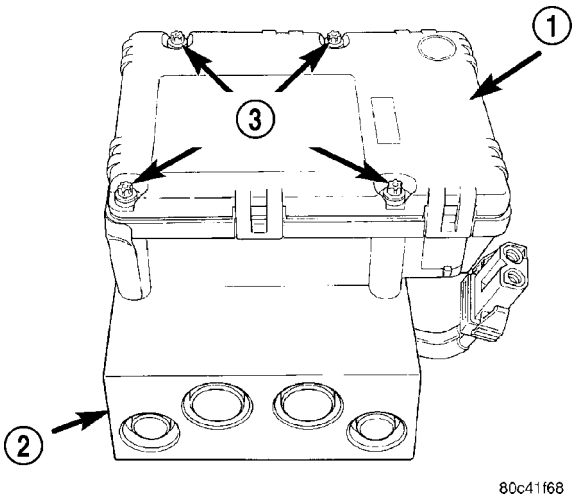

Fig. 24 CAB Attaching Bolts

1 – CAB
2 – HCU VALVE BLOCK
3 – MOUNTING BOLTS

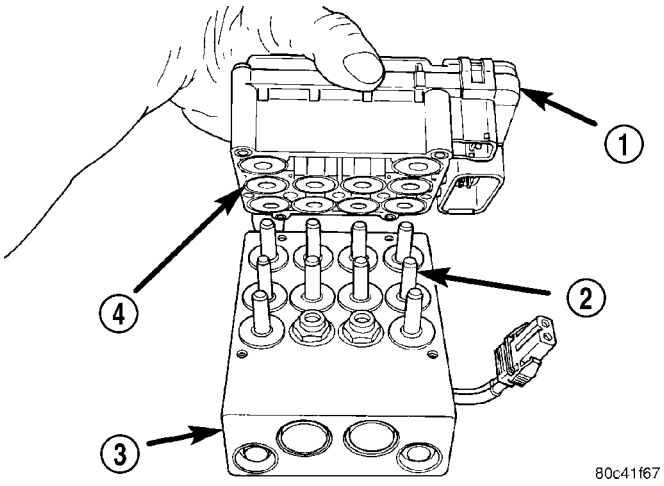

Fig. 25 Remove/Install CAB

1 – CAB
2 – VALVES
3 – HCU VALVE BLOCK
4 – SOLENOIDS

(6) Bleed the base and ABS hydraulic systems. Refer to ANTILOCK BRAKE SYSTEM BLEEDING in this section of this service manual group.

(7) Road test the vehicle to ensure proper operation of the base brakes and ABS.

SPECIFICATIONS

TONE WHEEL RUNOUT

FRONT TONE WHEEL:
Maximum Runout . . . . . 0.25 mm (0.009 in.)

REAR TONE WHEEL:
Maximum Runout . . . . . 0.25 mm (0.009 in.)

WHEEL SPEED SENSOR AIR GAP

FRONT WHEEL:
Minimum . . . . . 0.30 mm (0.012 in.)
Maximum . . . . . 1.50 mm (0.059 in.)

REAR WHEEL:
Minimum . . . . . 0.50 mm (0.019 in.)
Maximum . . . . . 1.25 mm (0.049 in.)

BRAKE FASTENER TORQUE

DESCRIPTION	TORQUE
ABS Integrated Control Unit:	
Mounting Bolts	11 N·m (97 in. lbs.)
CAB Mounting bolts	2 N·m (17 in. lbs.)
Bracket-to-Frame Rail Bolts	23 N·m (200 in. lbs.)
ABS Wheel Speed Sensor:	
Head Mounting bolt	12 N·m (105 in. lbs.)
Brake Tubes:	
Tube Nuts	17 N·m (145 in. lbs.)
Disc Brake Adapter (Front):	
Mounting Bolts	104 N·m (77 ft. lbs.)
Disc Brake Adapter (Rear):	
Mounting Bolts	95 N·m (70 ft. lbs.)
Disc Brake Caliper (Front):	
Caliper Banjo Bolt	26 N·m (230 in. lbs.)
Guide Pin Bolts	35 N·m (26 ft. lbs.)
Bleeder Screw	13 N·m (115 in. lbs.)
Disc Brake Caliper (Rear):	
Caliper Banjo Bolt	26 N·m (230 in. lbs.)
Guide Pin Bolts	22 N·m (192 in. lbs.)
Bleeder Screw	15 N·m (125 in. lbs.)
Drum Brake Shoe Support Plate (Rear):	
Mounting Bolts	95 N·m (70 ft. lbs.)
Hub And Bearing (Rear):	
Retaining Nut	217 N·m (160 ft. lbs.)
Wheel Mounting Nuts	135 N·m (100 ft. lbs.)
Master Cylinder:	
Mounting Nuts	28 N·m (250 in. lbs.)
Parking Brake:	
Lever Mounting Nut And Screw	28 N·m (250 in. lbs.)
Power Brake Booster:	
Mounting Nuts	34 N·m (300 in. lbs.)
Wheel Cylinder (Rear):	
Mounting Bolts	13 N·m (115 in. lbs.)
Bleeder Screw	10 N·m (80 in. lbs.)

BRAKES

TABLE OF CONTENTS

page

DESCRIPTION AND OPERATION
BRAKE SYSTEM - RHD 1
REMOVAL AND INSTALLATION
MASTER CYLINDER – RHD 1
POWER BRAKE BOOSTER – RHD 2
INTEGRATED CONTROL UNIT - RHD. 3
SPECIFICATIONS
TORQUE SPECIFICATIONS 4

DESCRIPTION AND OPERATION

BRAKE SYSTEM - RHD

The power brake system information in this section of the service manual is pertinent only to Right Hand Drive (RHD) vehicles. Since the description, operation, diagnosis and testing of components are the same as LHD vehicles. Refer to the left hand drive service manual for detailed information.

REMOVAL AND INSTALLATION

MASTER CYLINDER – RHD

REMOVAL

(1) Remove the air filter housing. Refer to the Fuel section of the service manual for detailed instructions.

(2) Disconnect and isolate the negative battery cable

NOTE: Pump the brake pedal several times to relieve vacuum in the brake booster. This will prevent booster from sucking any contaminants when master cylinder is removed.

(3) Remove the brake booster vacuum supply hose from the booster and position it out of the way.

(4) Position a drainpan under the vehicle.

(5) Disconnect the power steering fluid reservoir (Fig. 1) from its mounting bracket and position out of the way. Grasp reservoir with your hand and pull straight up to free from bracket.

(6) Disconnect fluid level switch wire from the master cylinder. Lift the release tab on the underside of the electrical connector and pull straight off.

(7) Remove the brake lines from the master cylinder.

(8) Remove the master cylinder retaining nuts and remove the master cylinder from the brake booster by sliding straight off mounting studs.

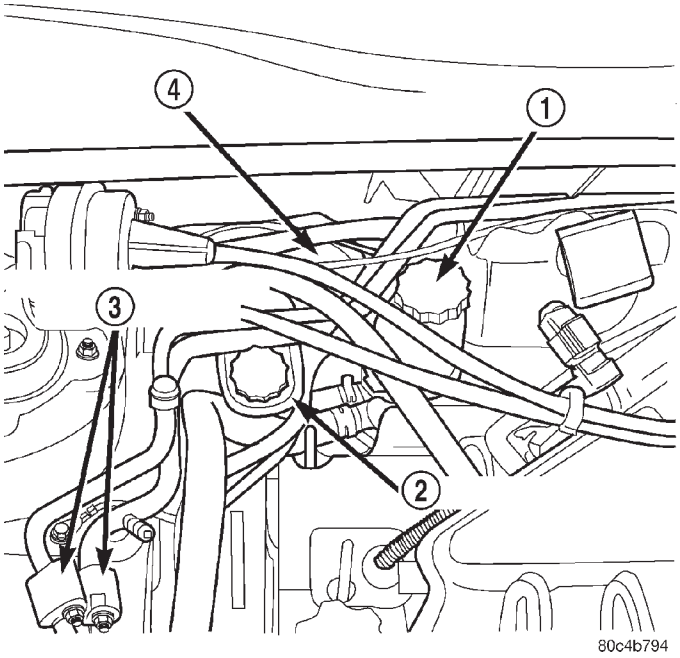

Fig. 1 RHD Master Cylinder

1 – POWER STEERING FLUID RESERVOIR
2 – MASTER CYLINDER
3 – REFRIGERANT LINE CONNECTIONS
4 – BRAKE BOOSTER

INSTALLATION

NOTE: Be certain rubber O-ring vacuum seal is installed in the master cylinder mounting flange prior to installation.

NOTE: If a new master cylinder is being installed, cylinder must be bench bled prior to installation.

(1) If equipped, remove protective sleeve from primary piston shank on new master cylinder.

(2) Clean cylinder mounting surface of brake booster.

REMOVAL AND INSTALLATION (Continued)

(3) Install master cylinder on brake booster and install retaining nuts. Torque the nuts to 28 N·m (255 in. lbs.).

(4) Install the brake lines on master cylinder. Torque brake lines to 17 N·m (150 in. lbs.).

(5) Connect fluid level switch wire on the master cylinder.

(6) Install the power steering fluid reservoir on its mounting bracket.

(7) Install the brake booster vacuum supply hose.

(8) Fill and bleed the brake system. Refer to the procedure in Brakes.

(9) Connect the negative battery cable.

(10) Reinstall the air filter housing.

WARNING: Be certain a firm brake pedal is achieved prior to attempting to operate the vehicle. If a firm brake pedal cannot be achieved recheck the system for leaks. If no leaks are found refer to Brakes – Diagnosis and Testing for more instructions.

POWER BRAKE BOOSTER – RHD

REMOVAL

(1) Remove the air filter housing from the vehicle. Refer to the Fuel section of the service manual for detailed instructions.

(2) Disconnect and isolate the negative battery cable.

(3) Using a R-134a refrigerant recovery machine, remove the refrigerant from the A/C system. Refer to the Heat and A/C section of the service manual for detailed instructions.

(4) Disconnect the refrigerant lines at their mid-line connection block just above the upper engine torque strut. Position the refrigerant lines out of the way and cap all openings to prevent contamination.

(5) Remove the master cylinder from the vehicle (Fig. 2). Refer to the procedure in this group.

(6) Working inside the vehicle, remove the instrument panel lower bezel.

(7) Working from underneath the instrument panel, disconnect the brake pedal push rod. Remove the retaining clip from the end of the brake pedal mounted stud, then slide the push rod straight off the pin (Fig. 3).

(8) Remove nuts attaching booster to dash panel.

(9) Working inside the engine compartment, remove the brake booster by carefully positioning booster lip past edge of valve cover. Use care to prevent breaking valve cover.

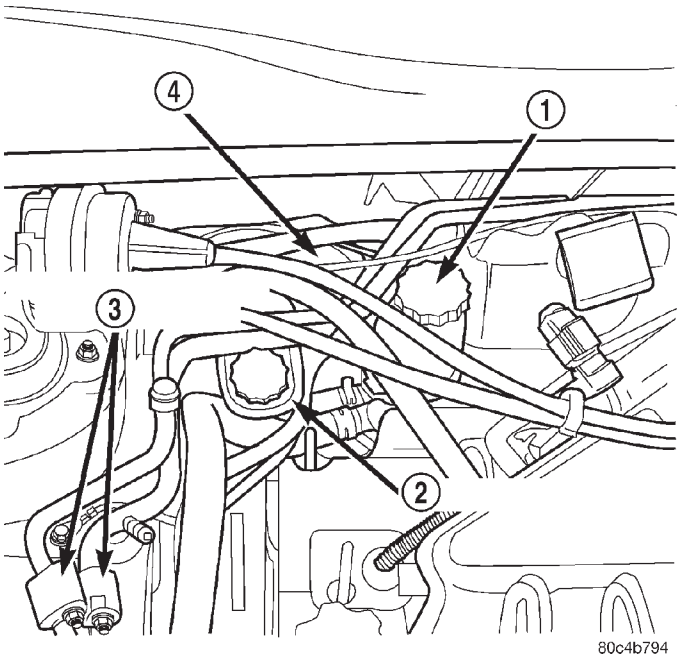

Fig. 2 RHD Brake Booster

1 – POWER STEERING FLUID RESERVOIR
2 – MASTER CYLINDER
3 – REFRIGERANT LINE CONNECTIONS
4 – BRAKE BOOSTER

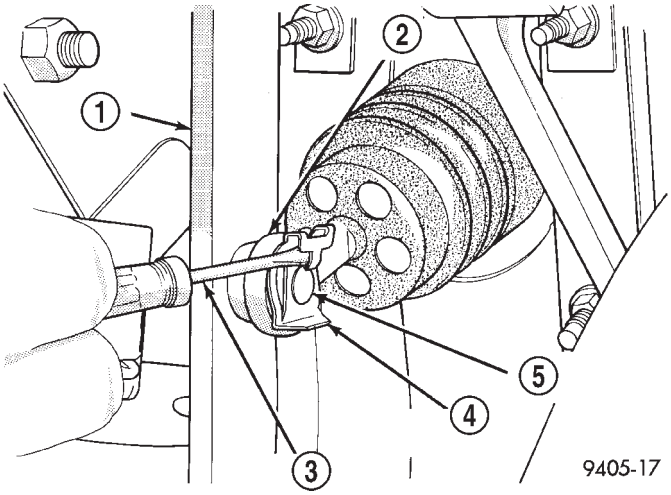

Fig. 3 Booster Push Rod Retaining Clip

1 – BRAKE PEDAL
2 – INPUT ROD
3 – SCREWDRIVER
4 – RETAINING CLIP
5 – BRAKE PEDAL PIN

INSTALLATION

(1) Install the brake booster on the dash panel, be certain dash seal is installed on booster studs prior to installation.

REMOVAL AND INSTALLATION (Continued)

(2) From under the instrument panel, install booster mounting nuts. Tighten nuts just enough to hold booster in place.

NOTE: Lubricate the pedal pin and bushing with Mopar multi-mileage grease before installation.

(3) Slide booster push rod onto the brake pedal pin. Then secure push rod to pedal pin with retaining clip (Fig. 3).

(4) Torque booster mounting nuts to 34 N·m (26 ft. lbs.).

(5) Install the instrument panel lower bezel.

(6) Install the master cylinder on the vehicle. Refer to the procedure in this group.

(7) Remove the caps and connect refrigerant lines. Be certain the sealing O-rings are well lubricated with PAG oil and free of tears. Torque the retaining fastener to 40 in. lbs.

(8) Using a R-134a refrigerant recovery machine, evacuate and charge the refrigerant system.

(9) Connect the negative battery cable.

(10) Reinstall the air filter housing.

WARNING: Be certain a firm brake pedal is achieved prior to attempting to operate the vehicle. If a firm brake pedal cannot be achieved recheck the system for leaks. If no leaks are found refer to Brakes – Diagnosis and Testing for more instructions.

INTEGRATED CONTROL UNIT - RHD

NOTE: Before proceeding with this procedure, review SERVICE WARNINGS AND CAUTIONS at the beginning of REMOVAL AND INSTALLATION in this section.

REMOVAL

(1) Remove the air filter housing from the vehicle. Refer to the Fuel section of the service manual for detailed instructions.

(2) Disconnect and isolate the negative battery cable.

(3) Unlatch the power distribution center, lift it up, and move it to the side.

(4) Disconnect the brake tubes going to the HCU (Fig. 4).

(5) Disconnect the 25-way connector from the controller antilock brake (CAB) mounted on the integrated control unit (ICU) and move it out of the way (Fig. 4). The connector is disconnected by pulling outward on the connector lock. This will unlock and raise the 25-way connector out of the socket on the CAB.

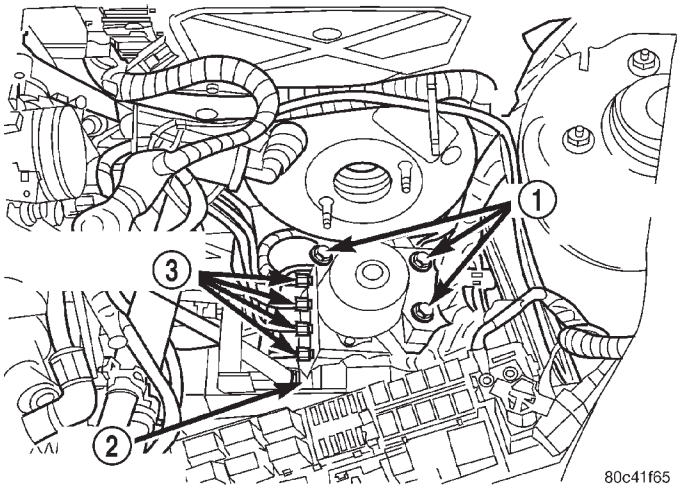

Fig. 4 HCU Connections (LHD Shown) RHD HCU mounting identical

1 – ICU MOUNTING BOLTS
2 – CAB CONNECTOR
3 – BRAKE TUBES TO BRAKES

(6) Remove the 3 bolts attaching the ICU to its mounting bracket. (Fig. 4).

(7) Remove the ICU from the vehicle.

(8) Refer to DISASSEMBLY AND ASSEMBLY in this section of this group for the procedure on separating and reattaching the CAB to the HCU.

INSTALLATION

(1) Install the ICU onto its mounting bracket.

(2) Install the 3 bolts attaching the ICU to the mounting bracket (Fig. 4). Tighten the 3 mounting bolts to a torque of 11 N·m (97 in. lbs.).

CAUTION: Before installing the 25-way connector in the CAB, be sure the seal is properly installed in the connector.

(3) Install the 25-way connector into the socket of the CAB as follows:

- Position the 25-way connector in the socket of the CAB and carefully push it down as far as possible (Fig. 4).
- When the connector is fully seated into the CAB socket, push the connector lock inward. This pulls the connector into the socket of the CAB and locks it in the installed position.

(4) Install the brake tubes going to HCU (Fig. 4). Using a crow foot on a torque wrench, tighten the four brake tube nuts to a torque of 17 N·m (145 in. lbs.).

(5) Install the power distribution center.

(6) Connect the negative (ground) cable on the battery.

(7) Install the air cleaner housing.

REMOVAL AND INSTALLATION (Continued)

(8) Bleed the base and the ABS hydraulic systems. Refer to ANTILOCK BRAKE SYSTEM BLEEDING in this section.

(9) Fill the master cylinder to the proper fill level.

(10) Road test the vehicle to ensure proper operation of the base and antilock brake systems.

SPECIFICATIONS

TORQUE SPECIFICATIONS

DESCRIPTION	TORQUE
Brake Booster to Cowl Panel	
Nuts	34 N·m (300 in. lbs.)
Brake Lines at Master Cylinder	
Tube Nuts	17 N·m (150 in. lbs.)
Master Cylinder to Vacuum Booster	
Nuts	28 N·m (255 in. lbs.)
Mid-line Refrigerant Line Connection Block	
Nuts	40 in. lbs.

CLUTCH

TABLE OF CONTENTS

	page
DESCRIPTION AND OPERATION	
MODULAR CLUTCH ASSEMBLY	1
CLUTCH RELEASE BEARING AND FORK	2
CLUTCH HYDRAULIC SYSTEM	2
FLUID—CLUTCH HYDRAULIC	3
CLUTCH MASTER CYLINDER	3
CLUTCH SLAVE CYLINDER	4
CLUTCH INTERLOCK/UPSTOP SWITCH	4
DIAGNOSIS AND TESTING	
CLUTCH SYSTEM DIAGNOSIS	5
DRIVE PLATE MISALIGNMENT	7
CLUTCH CHATTER COMPLAINTS	7
CLASH–INTO–REVERSE COMPLAINTS	8
CLUTCH INTERLOCK/UPSTOP SWITCH	8
REMOVAL AND INSTALLATION	
CLUTCH INTERLOCK/UPSTOP SWITCH	10
MODULAR CLUTCH ASSEMBLY	11
RELEASE BEARING AND FORK	16
CLUTCH MASTER CYLINDER	16
CLUTCH SLAVE CYLINDER	19
CLEANING AND INSPECTION	
CLUTCH CONTAMINATION	20
CLEANING PRECAUTIONS	20
SPECIFICATIONS	
TORQUE	20

DESCRIPTION AND OPERATION

MODULAR CLUTCH ASSEMBLY

DESCRIPTION

(1) The modular clutch assembly (Fig. 1) is located between the engine and manual transaxle in the transaxle bellhousing, and is serviced only as an assembly. The modular clutch assembly is a self-adjusting design and consists of the following components:

- Flywheel
- Clutch Disc
- Pressure Plate
- Diaphragm Spring
- Adjusting Ring
- Sensor
- Cover

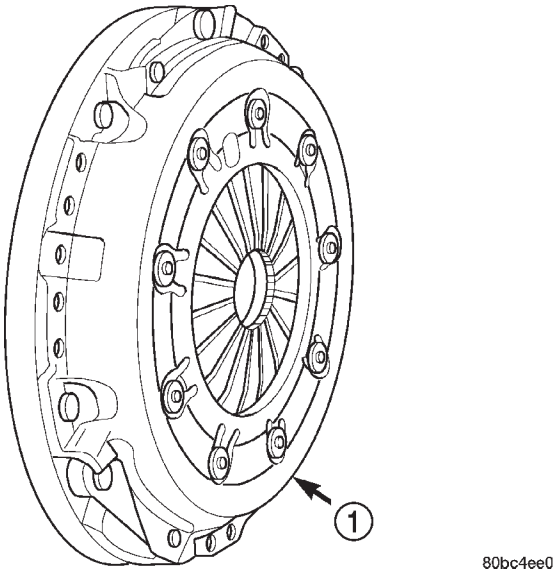

Fig. 1 Modular Clutch Assembly

1 – MODULAR CLUTCH ASSEMBLY

OPERATION

The modular clutch assembly is designed to transmit power from the engine to the manual transaxle. This is accomplished by the friction and clamping force generated when the spring loaded pressure plate locks the clutch disc to the flywheel (Fig. 2). The clutch disc, which is splined to the transaxle input shaft, transmits power until the center of the diaphragm spring is depressed, and the clamp force is removed from the disc. The self-adjusting feature of this clutch assembly relies on the sensor ring and the adjuster ring (Fig. 3), which works its way around a ramped clutch cover, taking up clearance as the clutch disc wears and maintaining diaphragm spring force throughout the life of the clutch. The primary benefits of this design are reduced pedal effort, constant release load over clutch life, and extended clutch life.

DESCRIPTION AND OPERATION (Continued)

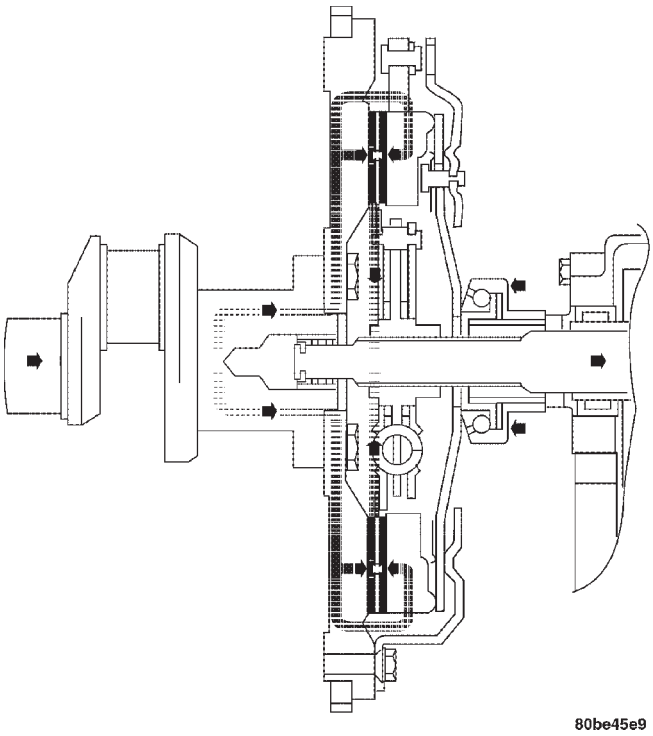

Fig. 2 Clutch Coupling Powerflow—Typical

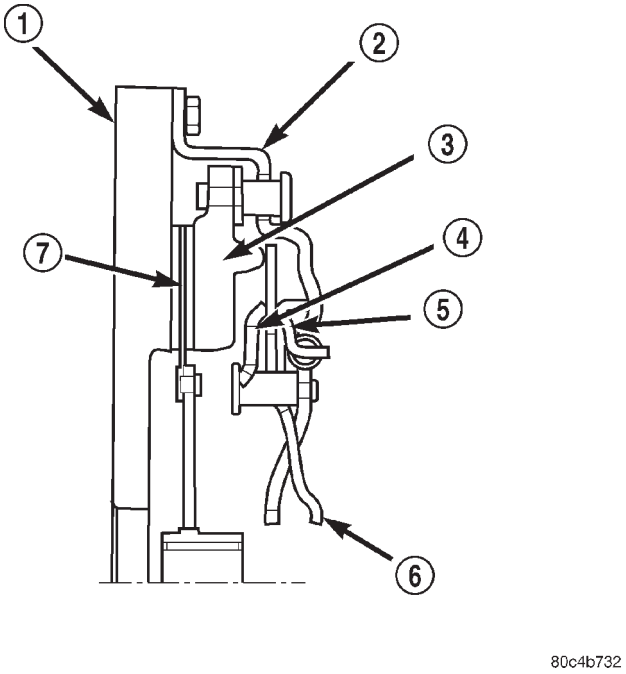

Fig. 3 Modular Clutch Assembly Components—Typical

1 – FLYWHEEL
2 – COVER
3 – PRESSURE PLATE
4 – SENSOR RING
5 – ADJUSTING RING
6 – DIAPHRAGM SPRING
7 – DISC

CLUTCH RELEASE BEARING AND FORK

DESCRIPTION

A conventional release bearing is used to engage and disengage the clutch pressure plate. The clutch release bearing is mounted on the transaxle front bearing retainer. The bearing is attached to and operated by the release fork (Fig. 4), which moves the bearing into contact with the clutch cover diaphragm spring.

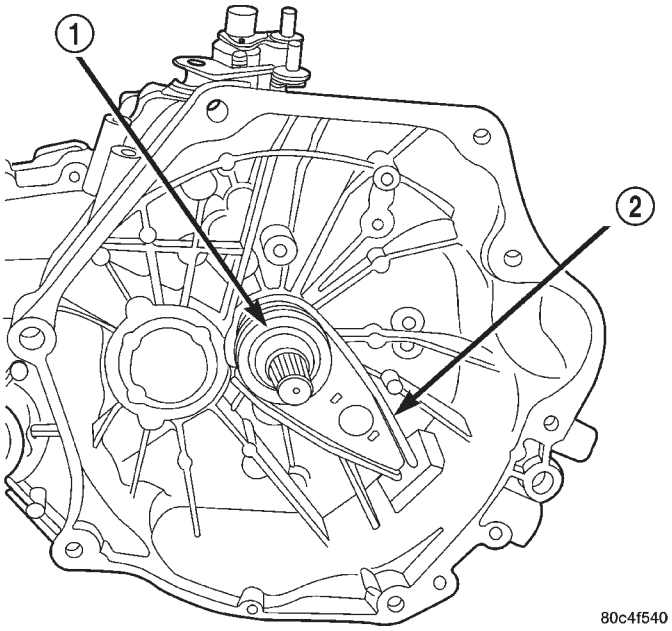

Fig. 4 Clutch Release Bearing and Fork

1 – RELEASE BEARING
2 – PIVOT FORK

OPERATION

The release bearing is operated by the release fork. Slave cylinder force causes the release lever to move the release bearing into contact with the diaphragm spring. As additional force is applied, the bearing presses the diaphragm spring fingers inward on the fulcrums. This action moves the pressure plate rearward, relieving clamping force on the clutch disc. Releasing pedal pressure removes clutch hydraulic pressure. The release bearing then moves away from the diaphragm spring which allows the pressure plate to exert clamping force on the clutch disc.

CLUTCH HYDRAULIC SYSTEM

DESCRIPTION

The clutch hydraulic system (Fig. 5) consists of a clutch master cylinder and integral reservoir, a clutch slave cylinder and integral damper, and an interconnecting fluid line.

DESCRIPTION AND OPERATION (Continued)

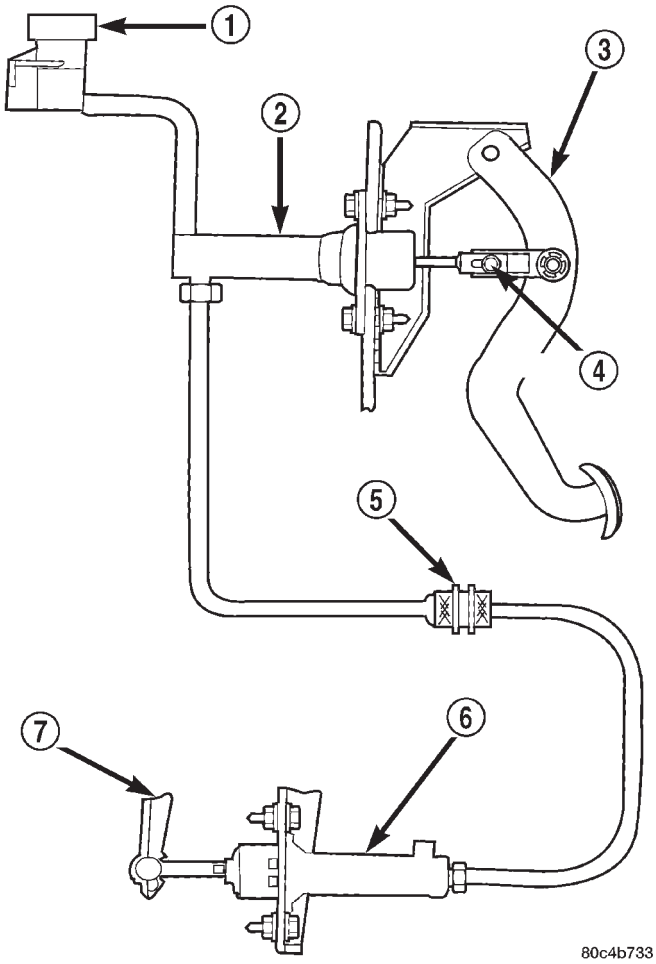

Fig. 5 Clutch Hydraulic System—Typical

1 – RESERVOIR
2 – MASTER CYLINDER
3 – CLUTCH PEDAL
4 – ADJUSTMENT SCREW
5 – QUICK CONNECT
6 – SLAVE CYLINDER
7 – FORK

OPERATION

The clutch hydraulic system is responsible for engaging and disengaging the clutch. Depressing the clutch pedal develops fluid pressure in the clutch master cylinder. This pressure is transmitted to the slave cylinder through a connecting line. In turn, the slave cylinder operates the clutch release fork (Fig. 5).

Slave cylinder force cause the release lever to move the release bearing into contact with the diaphragm spring. As additional force is applied, the bearing presses the diaphragm spring fingers inward on the fulcrums. This action moves the pressure plate rearward, relieving clamp force on the disc.

FLUID—CLUTCH HYDRAULIC

DESCRIPTION

CAUTION: Never use any type of petroleum-based fluid (engine oil, transmission oil, power steering fluid, etc.) in the clutch hydraulic system. Use of such fluids will result in master/slave cylinder seal damage, and cause a failure of the hydraulic clutch release system.

NOTE: The clutch hydraulic system and replacement components are pre-filled, and under normal operating conditions, additional fluid is not required for the life of the vehicle.

The fluid required for use in the clutch hydraulic system is brake fluid conforming to DOT 3 specifications and J1703 standards. No other type of fluid is recommended or approved for use in the clutch hydraulic system. use only Mopar® brake fluid or equivalent from a tightly sealed container.

CLUTCH MASTER CYLINDER

DESCRIPTION

The clutch master cylinder mounts to the cowl (Fig. 6) and consists of a push rod (adjustable on LHD models), a piston and cylinder housing, an integral fluid reservoir, and an interconnecting hydraulic tube (Fig. 7).

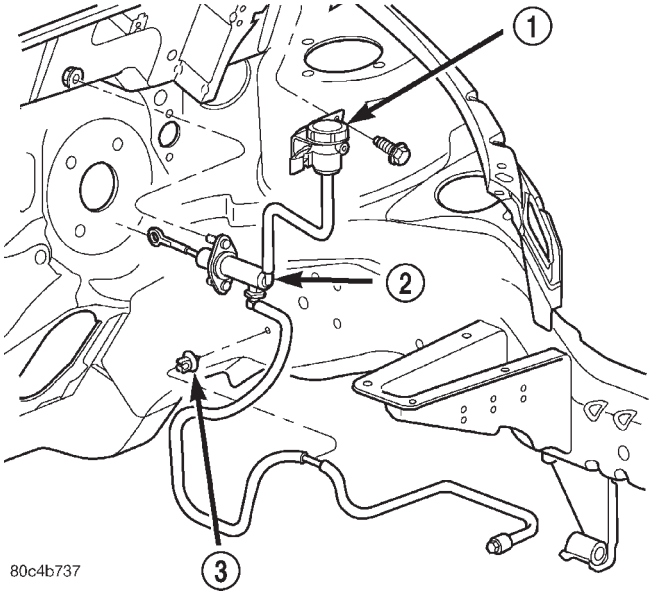

Fig. 6 Master Cylinder Mounting—Typical

1 – RESERVOIR
2 – MASTER CYLINDER
3 – RETAINER

DESCRIPTION AND OPERATION (Continued)

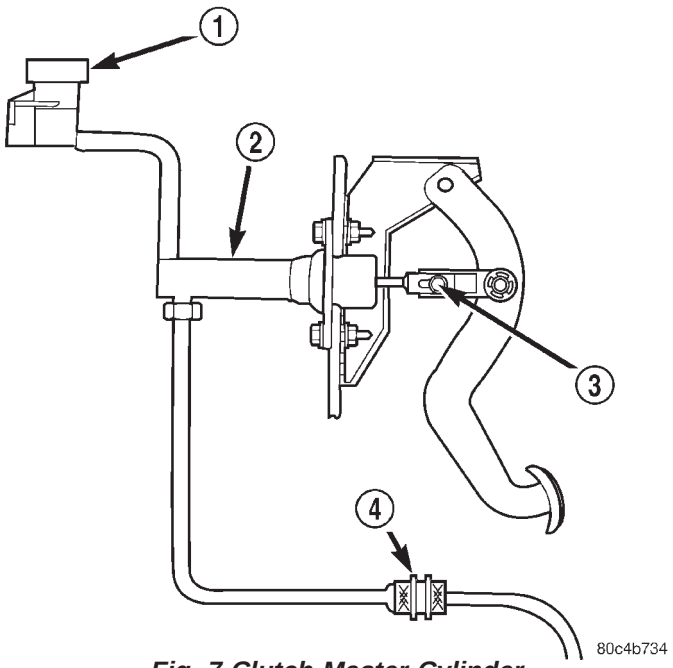

Fig. 7 Clutch Master Cylinder

1 – RESERVOIR
2 – MASTER CYLINDER
3 – ADJUSTMENT SCREW
4 – QUICK CONNECT

OPERATION

The clutch master cylinder (Fig. 7) produces the hydraulic pressure necessary to disengage the clutch. When the clutch pedal is depressed, the push rod moves the piston to produce pressure in the cylinder. This pressure moves fluid through the system to the slave cylinder, which in turn operates the clutch fork and clutch release bearing, disengaging the clutch. When the clutch pedal is released, pressure is relieved and the return spring returns the piston to its original position until the next pedal actuation.

CLUTCH SLAVE CYLINDER

DESCRIPTION

The clutch slave cylinder is fastened to transaxle bellhousing (Fig. 8), and consists of a hydraulic piston and cylinder, seal, return spring, and integral fluid damper and line (Fig. 9).

OPERATION

When the clutch pedal is depressed, fluid pressurized by the clutch master cylinder pushes the slave cylinder piston, extending the push rod and operating the clutch release fork and bearing. The integral damper (Fig. 9) absorbs vibration and noise generated in the clutch release system, preventing it from being transmitted into the passenger compartment via the hydraulic circuit.

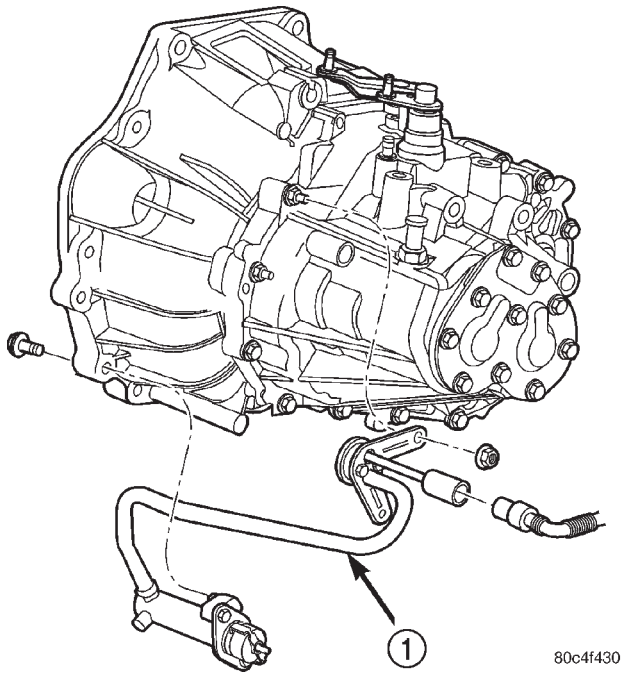

Fig. 8 Slave Cylinder Mounting

1 – SLAVE CYLINDER

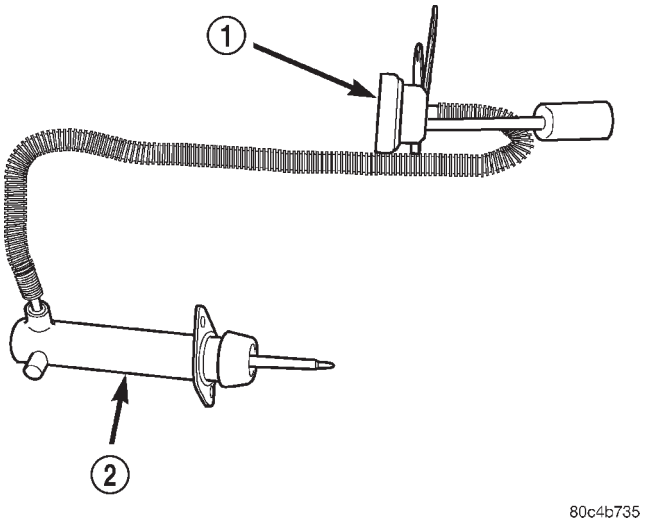

Fig. 9 Clutch Slave Cylinder

1 – DAMPER
2 – SLAVE CYLINDER

CLUTCH INTERLOCK/UPSTOP SWITCH

DESCRIPTION

The clutch interlock/upstop switch is an assembly consisting of two switches: an engine starter inhibit switch (interlock) and a clutch pedal upstop switch (Fig. 10). The switch assembly is located in the clutch/brake pedal bracket assembly (Fig. 11), each switch being fastened by four plastic wing tabs.

DESCRIPTION AND OPERATION (Continued)

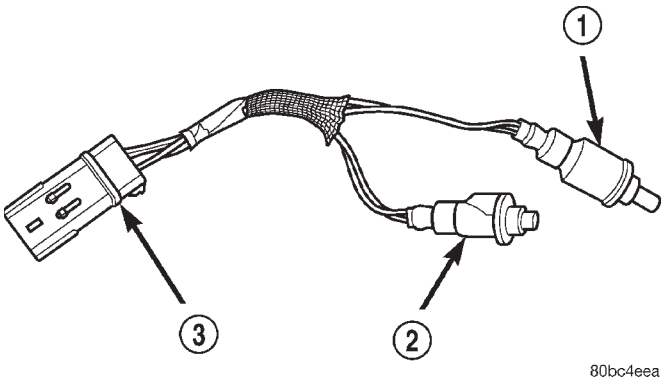

Fig. 10 Clutch Interlock/Upstop Switch

1 – UPSTOP SWITCH
2 – INTERLOCK SWITCH
3 – CONNECTOR

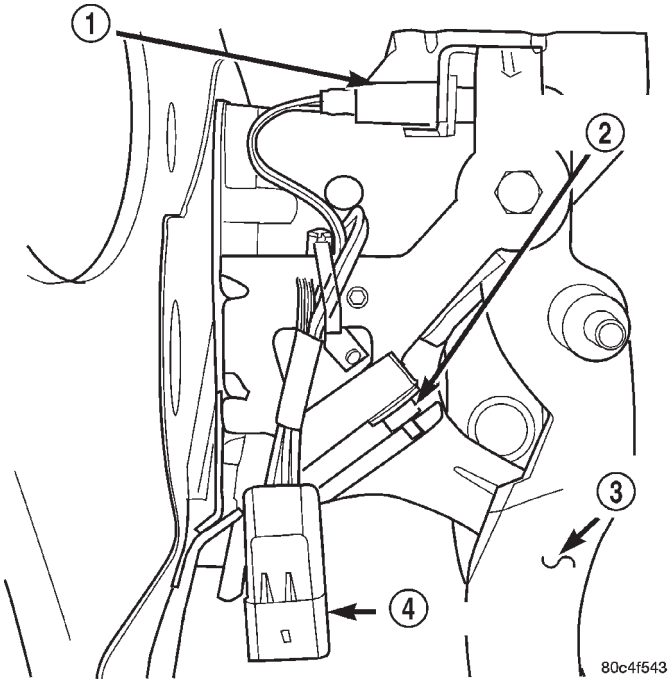

Fig. 11 Clutch/Brake Pedal Bracket Assembly

1 – UPSTOP SWITCH
2 – INTERLOCK SWITCH
3 – CLUTCH PEDAL
4 – CONNECTOR

OPERATION

Clutch Interlock Switch

The clutch interlock switch prevents engine starter operation and inadvertent vehicle movement with the clutch engaged and the transaxle in gear.

The switch is open while the clutch pedal is at rest. When the clutch pedal is fully depressed, the pedal blade contacts and closes the switch, completing the signal circuit from the PCM and closing the ground path, allowing engine starter operation. The interlock switch is not adjustable.

Clutch Pedal Upstop Switch

With the clutch pedal at rest, the clutch pedal upstop switch is closed, allowing speed control operation. When the clutch pedal is depressed, the upstop switch opens and signals the PCM to cancel speed control operation, and enter a modified engine calibration schedule to improve driveability during gear-to-gear shifts. The upstop switch is not adjustable.

DIAGNOSIS AND TESTING

CLUTCH SYSTEM DIAGNOSIS

Clutch problem diagnosis will generally require a road test to determine the type of fault. Component inspection will then determine the problem after road testing.

Drive the vehicle at normal speeds during road test. Shift the transaxle through all gear ranges and observe clutch action. If chatter, grab, slip, or improper release is experienced, remove and inspect the clutch components. If the problem is noise or hard shifting, further diagnosis may be needed. The transaxle or other driveline components may actually be at fault.

SERVICE DIAGNOSIS—CLUTCH GRAB/CHATTER

CONDITION	POSSIBLE CAUSES	CORRECTION
CLUTCH DISC FACING COVERED WITH OIL OR GREASE	Oil leak at engine rear main or transaxle input shaft seal	Correct leak and replace modular clutch assembly

DIAGNOSIS AND TESTING (Continued)

CONDITION	POSSIBLE CAUSES	CORRECTION
	Too much grease applied to splines of disc and input shaft	Apply lighter coating of grease to splines
NO FAULT FOUND WITH CLUTCH COMPONENTS	Problem actually related to suspension or driveline component	Further diagnosis required. Check engine/transmission mounts, suspension attaching parts and other driveline components as needed.
	Engine related problems	Check EFI and ignition systems
PARTIAL ENGAGEMENT OF CLUTCH DISC	Clutch cover, spring, or release fingers bent, distorted (rough handling, improper assembly)	Replace modular clutch assembly
	Clutch disc damaged or distorted	Replace modular clutch assembly
	Clutch misalignment	Check alignment and runout of flywheel, disc, or cover. Check clutch housing to engine dowels and dowel holes for damage. Correct as necessary.

SERVICE DIAGNOSIS—CLUTCH SLIPS

CONDITION	POSSIBLE CAUSES	CORRECTION
DISC FACING WORN OUT	Normal wear.	Replace modular clutch assembly.
	Driver frequently rides (slips) clutch, results in rapid wear overheating.	Replace modular clutch assembly
	Insufficient clutch cover diaphragm spring tension	Replace modular clutch assembly
CLUTCH DISC FACING CONTAMINATED WITH OIL OR GREASE	Leak at rear main oil seal or transaxle input shaft seal	Replace leaking seals. Replace modular clutch assembly.
	Excessive amount of grease applied to input shaft splines	Apply less grease to input shaft. Replace modular clutch assembly
	Road splash, water entering housing	Seal housing. Inspect clutch assembly.
CLUTCH IS RUNNING PARTIALLY DISENGAGED	Release bearing sticking or binding, does not return to normal running position.	Verify that bearing is actually binding. Then, replace bearing and transmission front bearing retainer if sleeve surface is damaged.
	Clutch master cylinder pushrod not adjusted properly, causing high preload.	Verify that pushrod adjustment is correct.
	Slave cylinder binding	Replace slave cylinder.
CLUTCH DISC FACINGS HAVE FRACTURED INTO SMALL PIECES	Driver performs a 5-1 downshift at vehicle speed in excess of 60 miles per hour	Alert driver to problem cause. Replace modular clutch assembly.
	Leak at rear main or transaxle input shaft seal	Replace modular clutch assembly. Replace seal.
	Excessive heat from slippage	Replace modular clutch assembly

DIAGNOSIS AND TESTING (Continued)

SERVICE DIAGNOSIS—IMPROPER CLUTCH RELEASE

CONDITION	POSSIBLE CAUSES	CORRECTION
CLUTCH DISC BINDS ON INPUT SHAFT SPLINES	Clutch disc hub splines damaged during installation	Clean, smooth, and lubricate disc and shaft splines. Replace modular clutch assembly and/or input shaft if splines are severely damaged.
	Input shaft splines rough, damaged.	Clean input shaft splines. Then lube.
	Corrosion or rust formations on splines of input shaft and disc	Clean input shaft splines and disc splines, then lube
CLUTCH DISC RUSTED TO FLYWHEEL AND/OR PRESSURE PLATE	Occurs in vehicles stored or not driven for extended period of time. Also occurs after steam cleaning if vehicle is not used for extended period.	Replace modular clutch assembly
CLUTCH WILL NOT DISENGAGE PROPERLY	Disc bent, distorted during transaxle installation	Replace modular clutch assembly
	Clutch cover diaphragm spring damaged during transaxle installation	Replace modular clutch assembly
	Release fork bent, loose, or damaged	Replace fork if worn or damaged
	Clutch master cylinder or slave cylinder leaking	Check and replace master and/or slave cylinder
	Master cylinder adjustable pushrod loose or damaged	Inspect. Tighten adjustment fastener or replace master cylinder

SERVICE DIAGNOSIS–CLUTCH PEDAL NOISE

CONDITION	POSSIBLE CAUSES	CORRECTION
CLUTCH PEDAL SQUEAKS WHEN DEPRESSED TO FLOOR	Pedal bushings worn out or inadequate lubrication	Replace or lubricate bushings
	Clutch pedal return spring worn out	Lubricate or replace return spring
	Clutch release lever pivot stud has inadequate lubrication	Lubricate or replace clutch release lever

DRIVE PLATE MISALIGNMENT

Common causes of misalignment are:

- Heat warping
- Mounting drive plate on a dirty crankshaft flange
- Incorrect bolt tightening
- Improper seating on the crankshaft shoulder
- Loose crankshaft bolts

Clean the crankshaft flange before mounting the drive plate. Dirt and grease on the flange surface may misalign the flywheel, causing excessive runout. Use new bolts when mounting drive plate to crankshaft. Tighten drive plate bolts to specified torque only. Over-tightening can distort the drive plate hub causing excessive runout.

CLUTCH CHATTER COMPLAINTS

For all clutch chatter complaints, do the following:

(1) Check for loose, misaligned, or broken engine and transmission mounts. If present, they should be corrected at this time. Test vehicle for chatter. If chatter is gone, there is no need to go any further. If chatter persists:

(2) Check hydraulic clutch release system is functioning properly.

(3) Check for loose connections in drive train. Correct any problems and determine if clutch chatter complaints have been satisfied. If not:

(4) Remove transaxle. See TRANSAXLE for procedure.

DIAGNOSIS AND TESTING (Continued)

(5) Check to see if the release bearing is sticky or binding. Replace bearing, if needed.

(6) Check linkage for excessive wear on the pivot stud and fork fingers. Replace all worn parts.

(7) Check clutch assembly for contamination (dirt, oil). Replace clutch assembly, if required.

(8) Check to see if the clutch disc hub splines are damaged. Replace with new clutch assembly, if necessary.

(9) Check input shaft splines for damage. Replace, if necessary.

(10) Check for uneven wear on clutch fingers.

(11) Check for broken clutch cover diaphragm spring fingers. Replace with new clutch assembly, if necessary.

CLASH–INTO–REVERSE COMPLAINTS

Certain NV T350 (A-578) manual transaxles are equipped with a reverse brake. It prevents clash when shifting into reverse, but only if the vehicle is not moving. See TRANSAXLE for further diagnosis.

(1) Depress clutch pedal to floor and hold. After three seconds, shift to reverse. If clash is present, clutch has excessive spin time, and the reverse brake may not be functioning.

(2) Remove transaxle. See TRANSAXLE for procedure.

(3) Check the input shaft spline, clutch disc splines, and release bearing for dry rust. If present, clean rust off and apply a light coat of bearing grease to the input shaft splines. Apply grease on the input shaft splines only where the clutch disc slides. Verify that the clutch disc slides freely along the input shaft spline.

(4) Check to see if the clutch disc hub splines are damaged, and replace with new clutch assembly if required.

(5) Check the input shaft for damaged splines. Replace as necessary.

(6) Check for broken clutch cover diaphragm spring fingers.

(7) Install clutch assembly and transaxle.

CLUTCH INTERLOCK/UPSTOP SWITCH

The clutch interlock/upstop switch is an assembly consisting of two switches: an engine starter inhibit switch (clutch interlock) and a clutch pedal upstop switch (Fig. 12). The switch assembly is located in the clutch/brake pedal bracket assembly (Fig. 13), each switch being fastened by four plastic wing tabs.

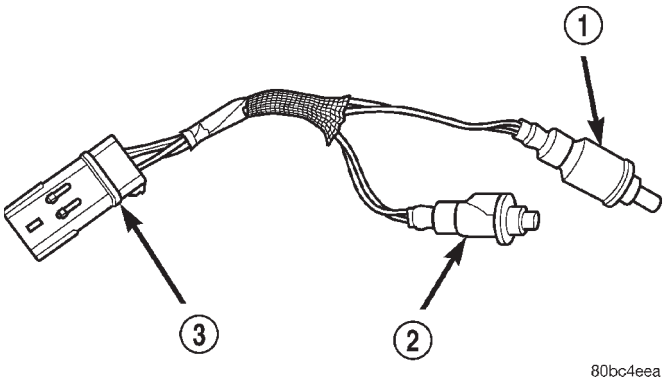

Fig. 12 Clutch Interlock/Upstop Switch

1 – UPSTOP SWITCH
2 – INTERLOCK SWITCH
3 – CONNECTOR

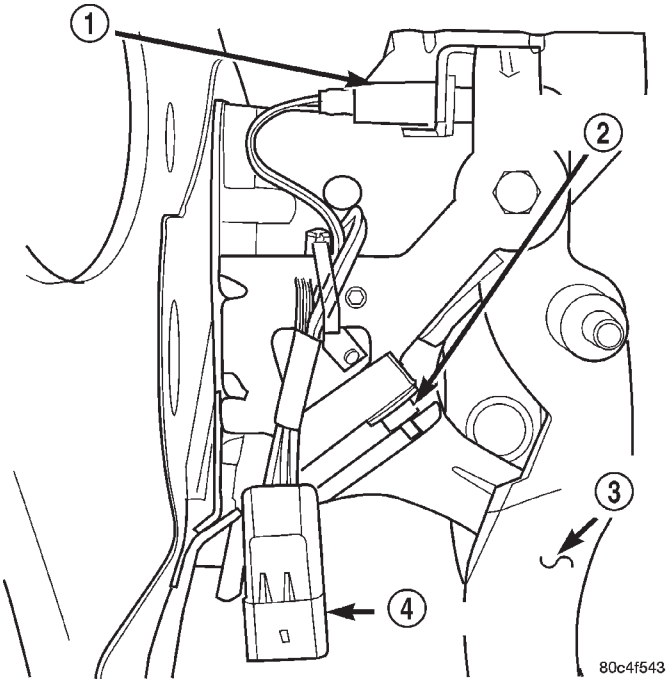

Fig. 13 Clutch/Brake Pedal Bracket Assembly

1 – UPSTOP SWITCH
2 – INTERLOCK SWITCH
3 – CLUTCH PEDAL
4 – CONNECTOR

CLUTCH INTERLOCK SWITCH

Mechanical Test

(1) With the park brake set and the transaxle **IN NEUTRAL,** turn the ignition key to the start position. The engine starter should not crank with the clutch pedal at rest (not depressed). If the starter cranks, proceed to the electrical test to determine whether the switch is defective or the circuit is shorted. If the vehicle does not crank, proceed to the next step.

(2) With the park brake set and the transaxle **IN NEUTRAL,** fully depress the clutch pedal and turn the ignition key to the start position. The engine starter should crank. If the starter does not crank,

DIAGNOSIS AND TESTING (Continued)

visually inspect the clutch pedal for obstructions (floor mat, etc.). Also make sure the clutch pedal blade contacts and fully

Electrical Test

(1) Move ignition key to the “OFF/LOCK” position and remove key.

(2) Set park brake.

(3) Disconnect the clutch interlock/upstop switch connector.

(4) Using an ohmmeter, check for continuity between terminals 2 & 3 with the interlock switch not depressed (clutch pedal at rest). There should be no continuity between the terminals (open circuit).

(5) Fully depress the clutch pedal to close the switch at least 1.25 mm (0.050 in.). The ohmmeter should show continuity (0 ohms).

(6) If ohmmeter readings do not fall within these ranges, the switch assembly is defective and should be replaced. If the switch tests ok, wiring is defective. Refer to Group 8W, Wiring Diagrams and repair defective wiring.

UPSTOP SWITCH

Mechanical Test

(1) Raise vehicle on hoist.

(2) Start engine and operate speed control to maintain speed.

(3) Depress clutch pedal at least 33 mm (1.30 in.). Speed control operation should terminate. If speed control does not terminate, the upstop switch is defective or the related wiring is shorted. Proceed to the upstop switch electrical test.

Electrical Test

(1) Move ignition key to the “OFF/LOCK” position and remove key.

(2) Set park brake.

(3) Disconnect the clutch interlock/upstop switch connector.

(4) Using an ohmmeter, check for continuity between terminals 1 & 2 with the upstop switch depressed (clutch pedal at rest). The ohmmeter should show continuity (0 ohms).

(5) Depress the clutch pedal at least 33 mm (1.30 in.) check for continuity between terminals 1 & 2. There should be no continuity between the terminals (open circuit).

(6) If ohmmeter readings do not fall within these ranges, the switch assembly is defective and should be replaced. If the switch tests ok, wiring is defective. Refer to Group 8W, Wiring Diagrams and repair defective wiring.

SERVICE DIAGNOSIS–CLUTCH INTERLOCK/UPSTOP SWITCH

CONDITION	POSSIBLE CAUSES	CORRECTION
ENGINE STARTER WON’T CRANK WHEN CLUTCH PEDAL IS PRESSED TO THE FLOOR	Clutch interlock switch does not have continuity when plunger is depressed 1.25 mm (1.30 in.)	Defective switch or open wiring circuit. Replace switch if necessary.
	Interlock switch plunger is not depressed when clutch pedal is pushed to the floor	Floor mat interferes with clutch pedal movement or clutch pedal bracket is bent.
	Problem is related to other components in the starting circuit.	Check other components in the starting circuit. Refer to Battery/Starting/Charging System in Group 8.
SPEED CONTROL DOES NOT TERMINATE WHEN CLUTCH PEDAL IS DEPRESSED BY AT LEAST 33 mm (1.30 in.)	Upstop switch circuit is closed when clutch pedal is depressed, or harness is shorted.	Refer to Upstop Switch Electrical Test in this group. Repair wiring or replace switch assembly as necessary.
	Other speed control system failure.	Refer to Group 8H, Speed Control for further diagnosis and testing procedures.

REMOVAL AND INSTALLATION

CLUTCH INTERLOCK/UPSTOP SWITCH

REMOVAL

(1) Disconnect and isolate battery negative cable.

(2) Remove left lower instrument panel bezel (Fig. 14).

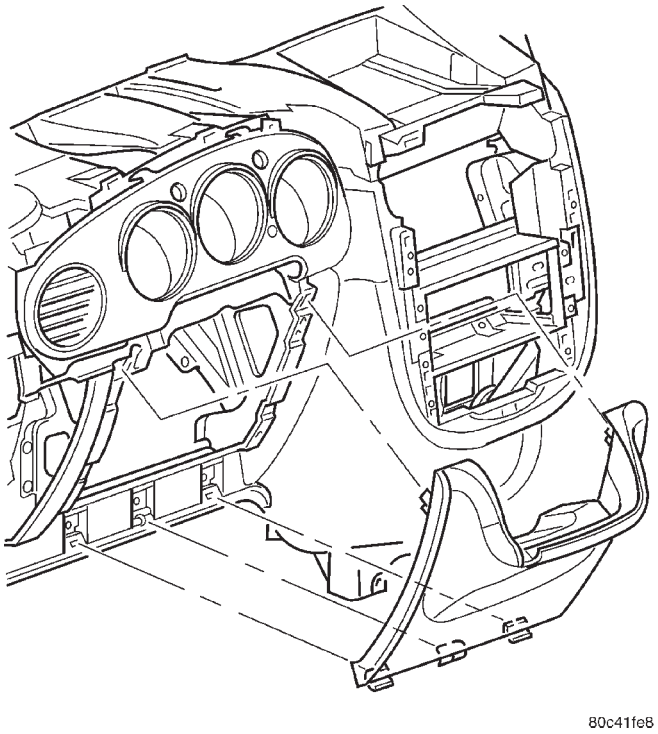

Fig. 14 Left Lower Instrument Panel Bezel

(3) Disconnect upstop switch and brake lamp switch connectors.

(4) Disconnect clutch master cylinder rod from clutch pedal pin.

(5) Remove brake booster push rod retaining clip from brake pedal. Disengage rod from pedal (Fig. 15).

(6) Remove two pedal assembly bracket to instrument panel nuts (Fig. 16).

(7) Remove four brake booster/pedal bracket-to-cowl panel nuts (Fig. 16).

(8) From under the hood, pull brake master cylinder/booster far enough forward to obtain pedal to bracket stud clearance.

(9) Remove the pedal bracket assembly (Fig. 16).

(10) Remove pedal pivot shaft and remove brake and clutch pedals.

(11) Remove the interlock/upstop switch assembly (Fig. 17) from the brake/clutch pedal bracket assembly by depressing the four plastic wing tabs on each switch.

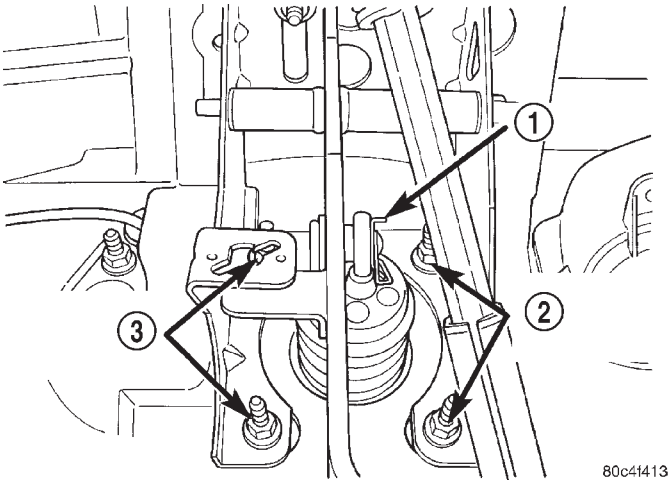

Fig. 15 Brake Booster Mounting Nuts and Rod Retaining Clip

1 – CLIP
2 – BOOSTER MOUNTING NUTS
3 – BOOSTER MOUNTING NUTS

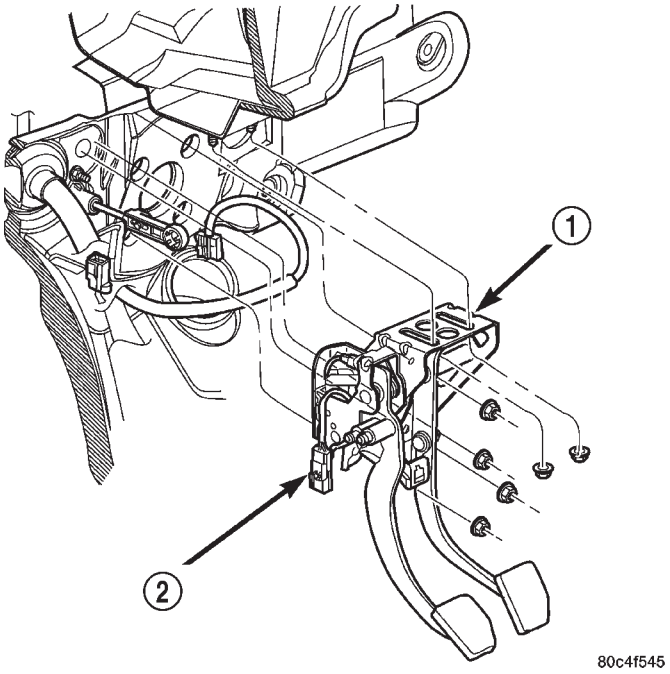

Fig. 16 Brake/Clutch Pedal Assembly Removal/ Installation

1 – CLUTCH/BRAKE PEDAL ASSEMBLY
2 – INTERLOCK/UPSTOP SWITCH CONNECTOR

INSTALLATION

NOTE: Proper switch harness routing is critical to switch durability. Note the harness routing and location of fasteners intended to keep wires from contacting pedals.

REMOVAL AND INSTALLATION (Continued)

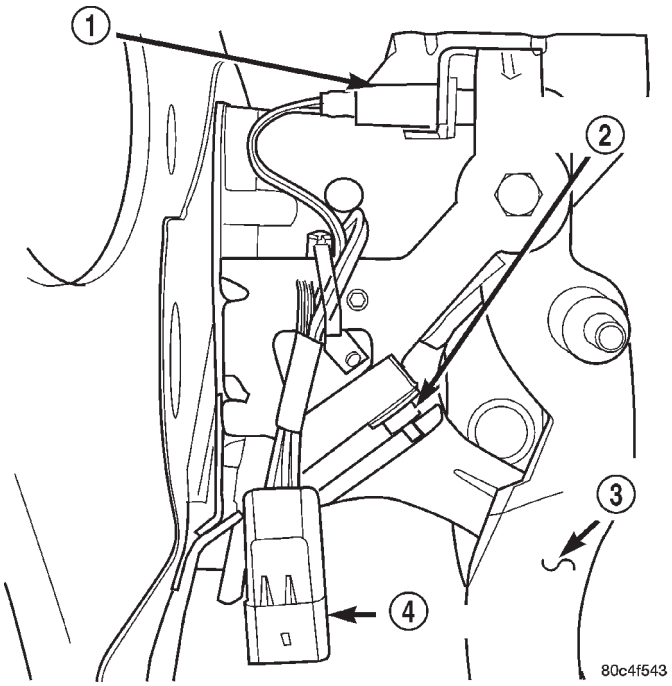

Fig. 17 Interlock/Upstop Switch

1 – UPSTOP SWITCH
2 – INTERLOCK SWITCH
3 – CLUTCH PEDAL
4 – CONNECTOR

(1) Install switches into the pedal bracket assembly as shown in (Fig. 17). Route harness as was prior to removal.

(2) Install clutch and brake pedals to pedal bracket, and install pivot shaft and nut. Torque pivot shaft nut to 34 N·m (25 ft. lbs.).

(3) Install brake/clutch pedal bracket assembly into position. Install and tighten brake booster mounting nuts to 34 N·m (25 ft. lbs.). Install and tighten pedal bracket-to-instrument panel nuts to 34 N·m (25 ft. lbs.).

(4) Install new stop lamp switch. Refer to Stop Lamp Switch Removal and Installation.

(5) Connect brake booster rod to brake pedal. Install retainer clip (Fig. 15).

(6) Connect clutch master cylinder pushrod. Loosen adjustment screw (Fig. 18) and gently lift clutch pedal upwards. Torque adjustment screw to 8 N·m (70 in. lbs.).

(7) Connect interlock/upstop and stop lamp switch connectors.

(8) Install left lower instrument panel bezel (Fig. 14).

(9) Connect battery negative cable.

(10) Verify proper switch operation.

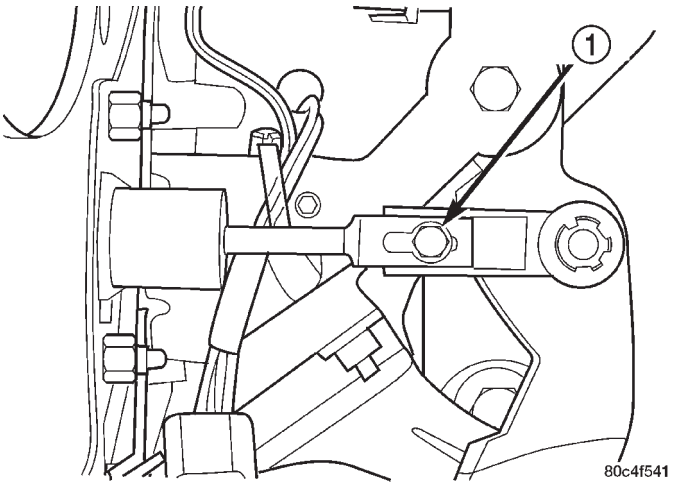

Fig. 18 Clutch Master Cylinder Pushrod Adjustment Screw

1 – ADJUSTMENT SCREW

MODULAR CLUTCH ASSEMBLY

REMOVAL

(1) Raise hood.

(2) Disconnect both battery cables.

(3) Remove air cleaner assembly (Fig. 19).

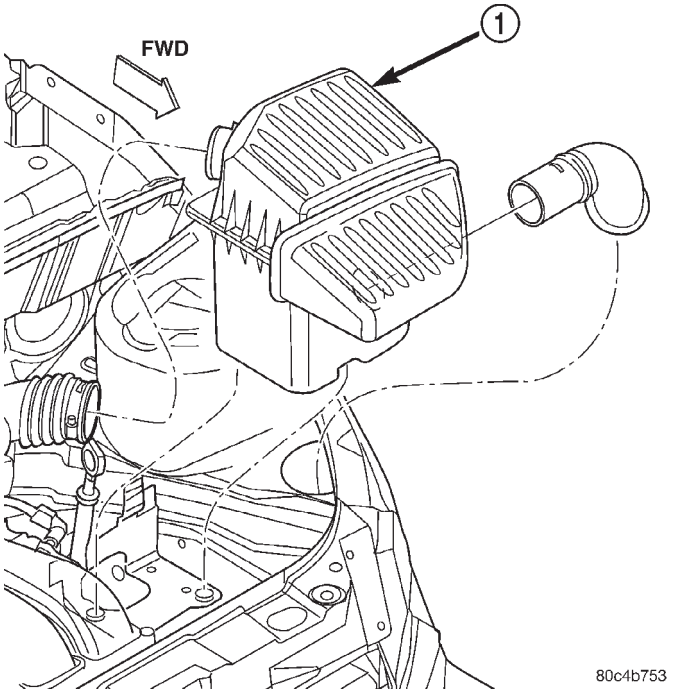

Fig. 19 Air Cleaner Assembly Removal/Installation

1 – AIR CLEANER ASSEMBLY

REMOVAL AND INSTALLATION (Continued)

(4) Remove battery hold down clamp and bolt, and remove battery (Fig. 20).

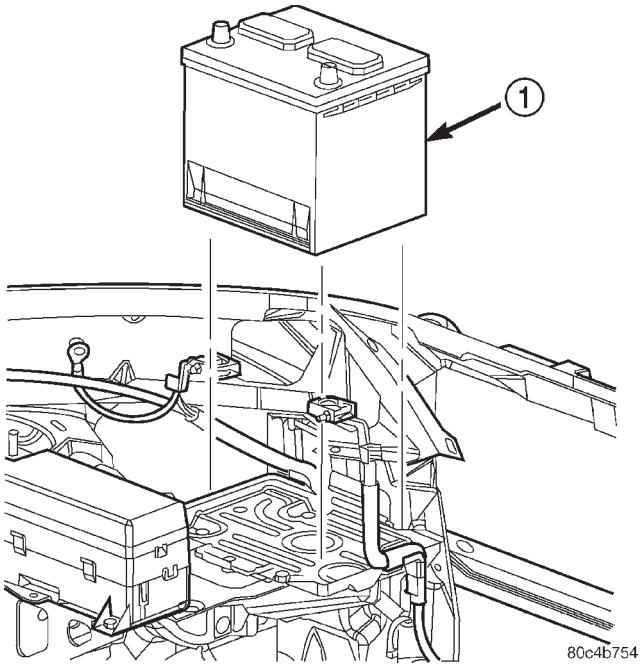

Fig. 20 Battery Removal/Installation

1 – BATTERY

(5) Remove battery tray from bracket (Fig. 21).

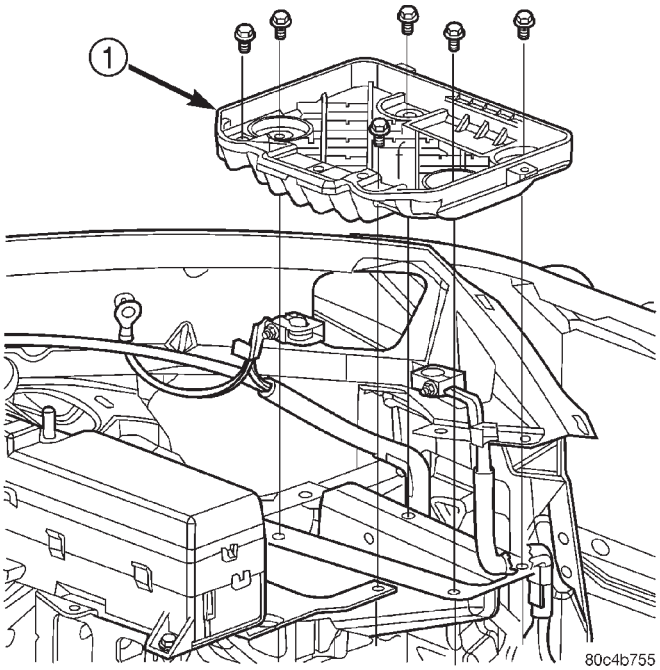

Fig. 21 Battery Tray Removal/Installation

1 – BATTERY TRAY

(6) Disconnect back-up lamp switch connector (Fig. 22).

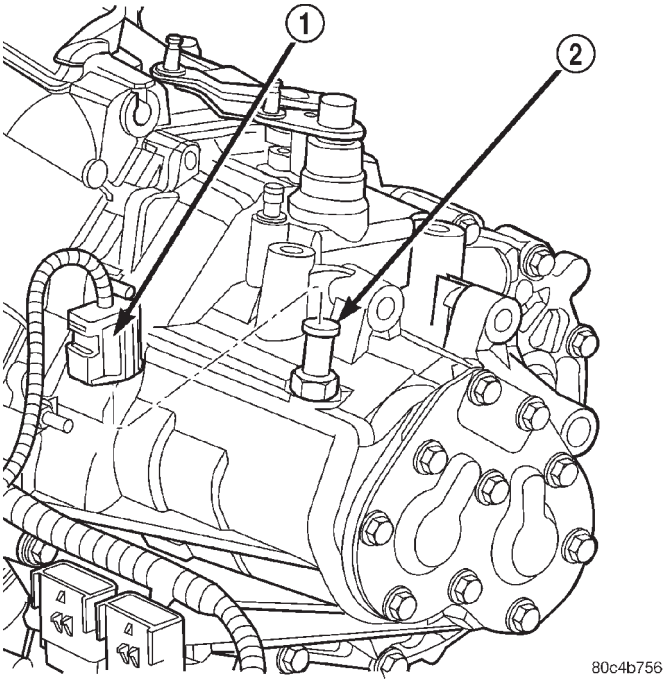

Fig. 22 Back-up Lamp Switch Connector

1 – CONNECTOR
2 – BACK UP LAMP SWITCH

(7) Remove shift cable-to-bracket clips (Fig. 23).

(8) Disconnect shift selector and crossover cable from levers (Fig. 23). Remove cables and secure out of the way.

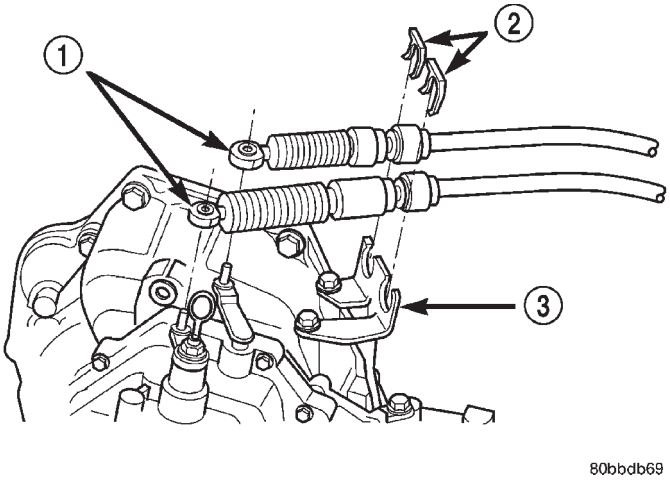

Fig. 23 Shift Cables at Transaxle

1 – SHIFT CABLES
2 – CLIPS
3 – BRACKET

(9) Disconnect the vehicle speed sensor connector (Fig. 24).

(10) Raise vehicle on hoist.

REMOVAL AND INSTALLATION (Continued)

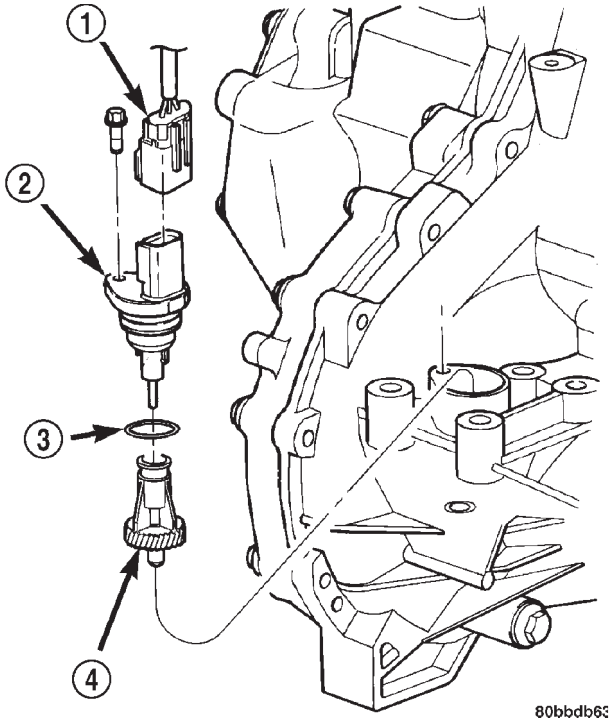

Fig. 24 Vehicle Speed Sensor Connector

1 – CONNECTOR
2 – SENSOR
3 – O-RING
4 – SPEEDO PINION

(11) Using tool 6638A (Fig. 25), disconnect clutch master cylinder hydraulic tube from the hydraulic clutch slave cylinder (Fig. 26).

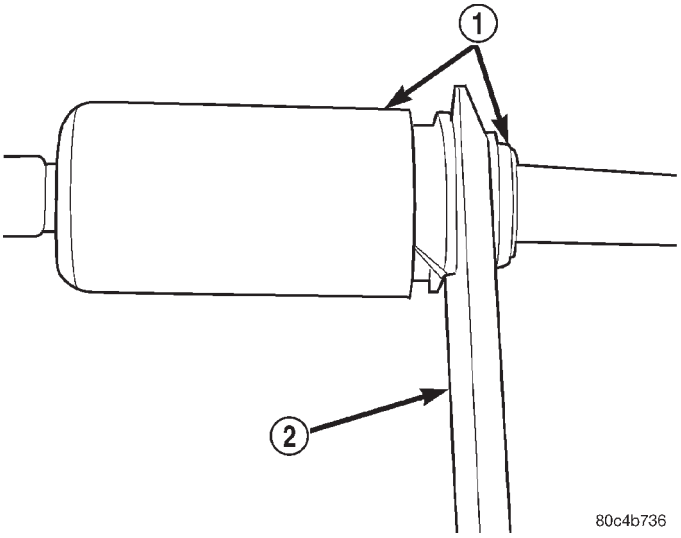

Fig. 25 Disconnect Clutch Hydraulic Quick-Connect using Tool 6638A

1 – QUICK CONNECT FITTING
2 – TOOL 6638A

(12) Remove both axle half shafts. Refer to Differential and Driveline for the correct procedures.

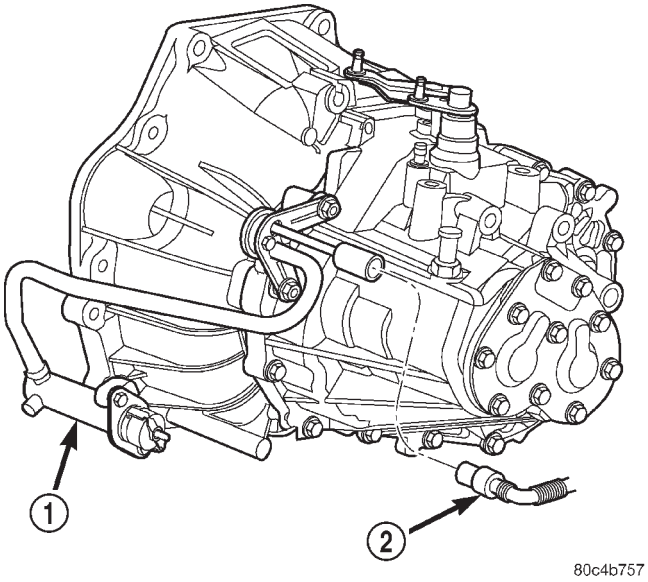

Fig. 26 Clutch Slave Cylinder Connection

1 – SLAVE CYLINDER
2 – HYDRAULIC TUBE

(13) Disconnect power steering hose from structural collar (Fig. 27)

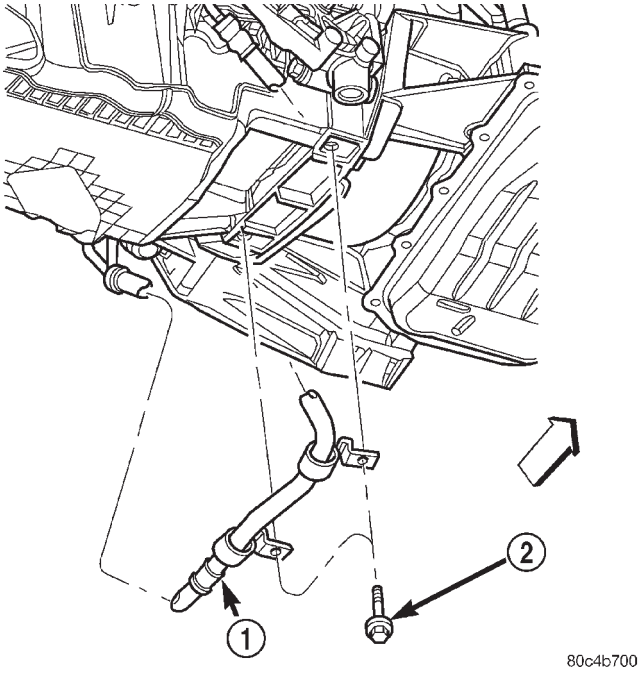

Fig. 27 Power Steering Hose to Structural Collar

1 – POWER STEERING HOSE
2 – BOLT

(14) Remove the left engine-to-transaxle lateral bending brace and structural collar (Fig. 28).

(15) Remove bellhousing dust cover (Fig. 29).

(16) Remove the right engine-to-transaxle lateral bending brace (Fig. 30).

REMOVAL AND INSTALLATION (Continued)

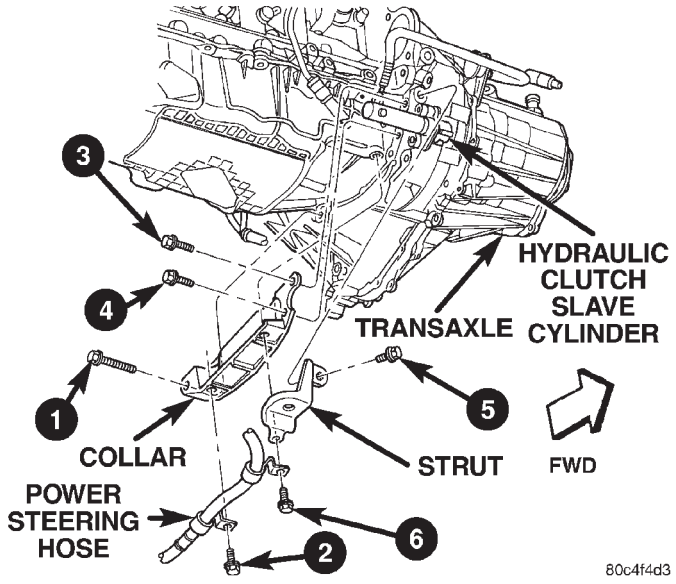

Fig. 28 Left Lateral Bending Brace and Structural Collar

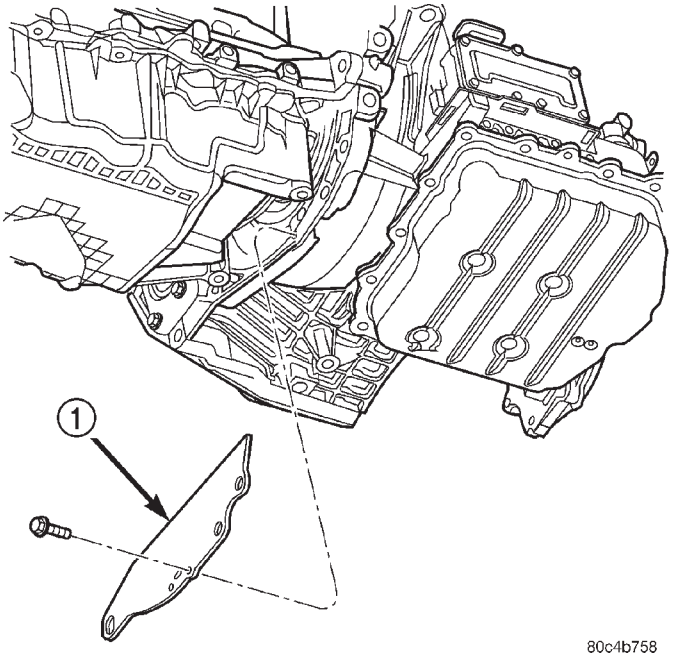

Fig. 29 Bellhousing Dust Cover Removal/Installation

1 – DUST COVER

(17) Remove starter motor (Fig. 31).

(18) Remove drive plate-to-clutch module bolts (Fig. 33).

(19) Support engine at oil pan with screw jack and wood block.

(20) Remove transaxle upper mount bolts (Fig. 32).

(21) Carefully lower engine and transaxle on screw jack until proper removal clearance is obtained.

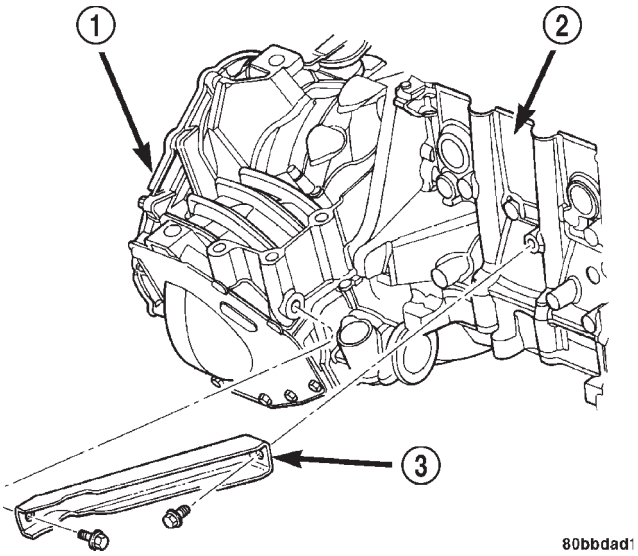

Fig. 30 Right Lateral Bending Brace Removal/ Installation—Typical

1 – TRANSAXLE
2 – ENGINE
3 – LATERAL BENDING BRACE

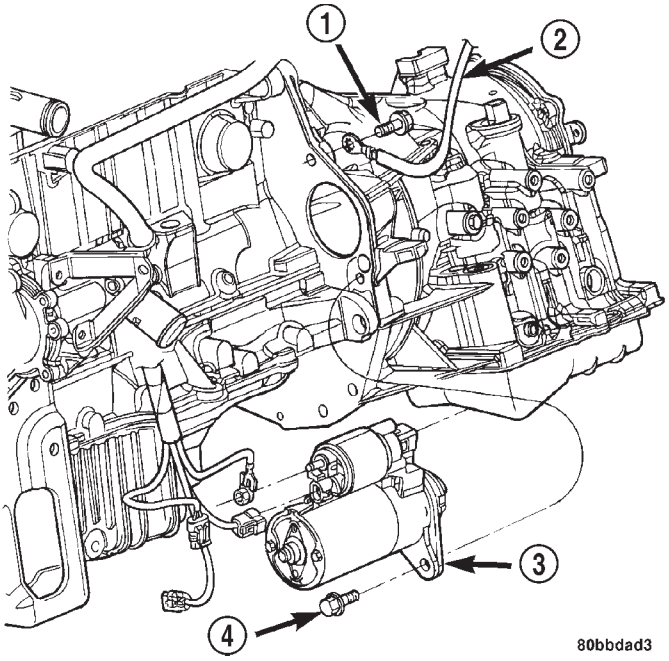

Fig. 31 Starter Motor Removal/Installation—Typical

1 – BOLT
2 – GROUND
3 – STARTER
4 – BOLT

(22) Obtain a helper to assist in holding transaxle while removing transaxle-to-engine mounting bolts (Fig. 33).

REMOVAL AND INSTALLATION (Continued)

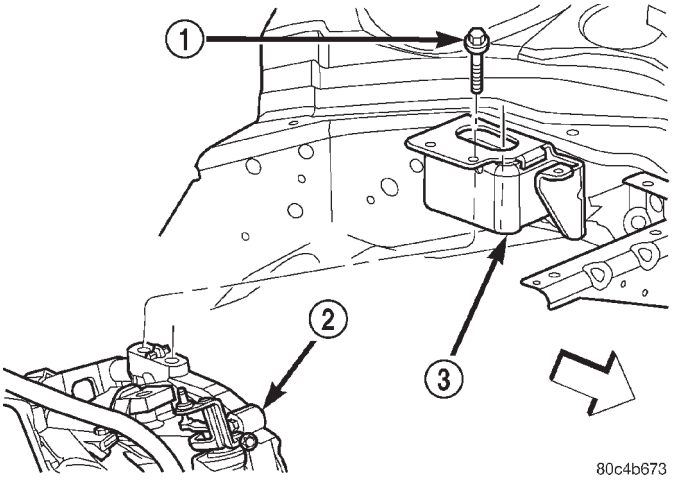

Fig. 32 Transaxle Upper Mount Bolts—Typical

1 – BOLT
2 – TRANSAXLE
3 – LEFT MOUNT

(23) Remove transaxle from vehicle (Fig. 33).

(24) Remove modular clutch assembly (Fig. 33) from transaxle input shaft.

INSTALLATION

(1) Install clutch module (Fig. 33) onto input shaft. Install transaxle into position.

(2) Install transaxle-to-engine mounting bolts (Fig. 33) and tighten to 108 N·m (80 ft. lbs.) torque.

(3) Raise engine and transaxle with screw jack until upper mount bracket aligns with upper mount. Install mount bolts and tighten to 68 N·m (50 ft. lbs.) torque (Fig. 32).

(4) Remove screwjack.

(5) Install drive plate-to-clutch module bolts and torque to 88 N·m (65 ft. lbs.) torque.

(6) Install starter motor and tighten bolts to 54 N·m (40 ft. lbs.) torque. Make sure to fasten ground cable to upper starter bolt as shown in (Fig. 31).

(7) Connect starter electrical harness and tighten positive cable nut to 10 N·m (90 in. lbs.) torque.

(8) Install bellhousing dust cover (Fig. 29).

(9) Install left engine-to-transaxle bending brace and structural collar (Fig. 28). Refer to ENGINE for proper tightening procedure.

(10) Install power steering hose to structural collar.

(11) Install the right lateral bending brace and tighten bolts to 81 N·m (60 ft. lbs.) torque (Fig. 30).

(12) Install both front axle driveshafts. Refer to DIFFERENTIAL AND DRIVELINE for the correct procedures.

(13) Fill transaxle with suitable amount of Mopar® Manual Transaxle Lubricant (PN 04874465).

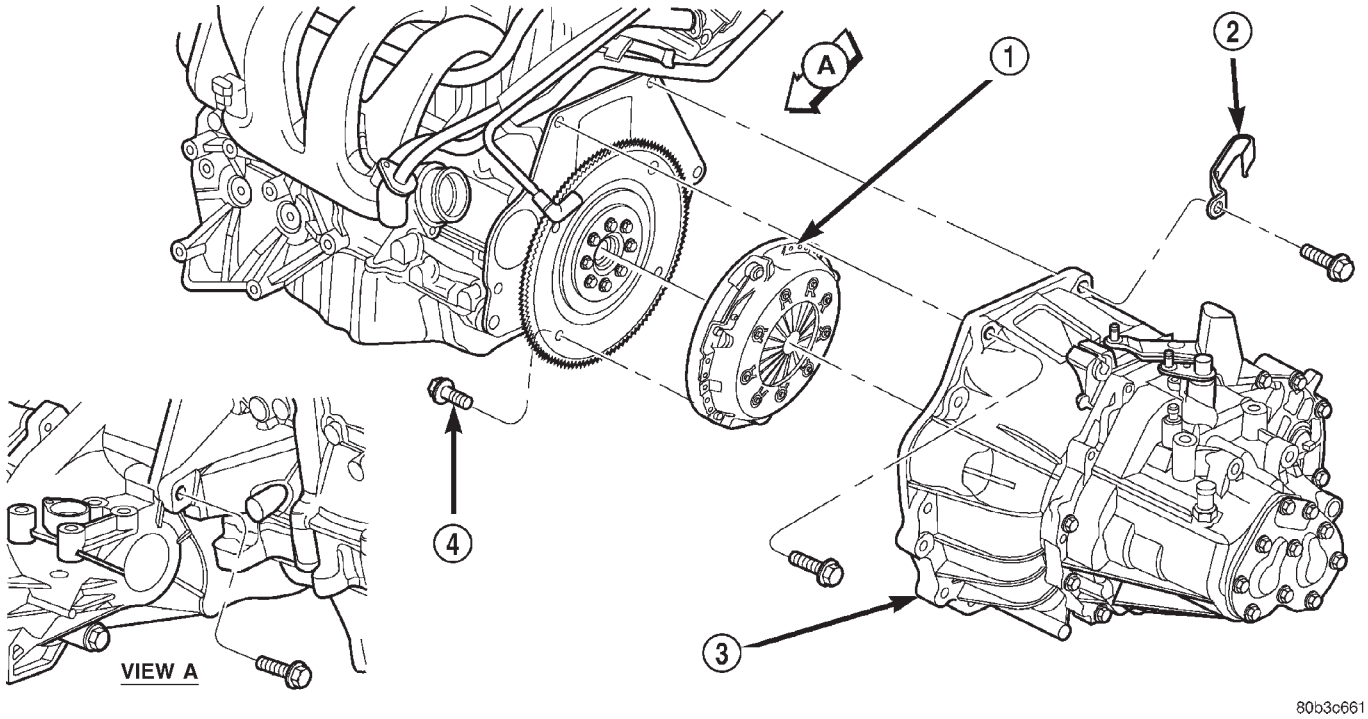

Fig. 33 Transaxle Removal/Installation

1 – MODULAR CLUTCH ASSEMBLY
2 – CLIP
3 – TRANSAXLE
4 – CLUTCH MODULE BOLT (4)

REMOVAL AND INSTALLATION (Continued)

(14) Connect clutch master cylinder tube to the hydraulic clutch slave cylinder (Fig. 26). An audible click should be heard. Verify connection by pushing and pulling quick connect.

(15) Lower vehicle.

(16) Connect vehicle speed sensor connector (Fig. 24).

(17) Connect shift crossover and selector cables to shift lever. Install cables to bracket and install retaining clips (Fig. 23).

(18) Connect back-up lamp switch connector (Fig. 22).

(19) Install battery tray (Fig. 21).

(20) Install battery and tighten hold down clamp to secure battery (Fig. 20).

(21) Connect the battery cables.

(22) Install the air cleaner assembly (Fig. 19).

(23) Road test vehicle and inspect for leaks.

RELEASE BEARING AND FORK

REMOVAL

(1) Remove the transaxle from the vehicle. See TRANSAXLE for proper procedures.

(2) Move the lever and bearing assembly (Fig. 34) to a vertical in-line position. Grasp the release lever with two hands in the pivot stud socket area. Pull with even pressure and the lever will pop off the pivot–stud. Do not use a screwdriver or pry bar to pop off the lever. This may damage the spring clip on the lever.

(3) As a unit, remove the fork from the bearing thrust plate. Be careful not to damage retention tabs on bearing.

(4) Examine the condition of the bearing. **It is pre-lubricated and sealed and should not be immersed in oil or solvent.**

(5) The bearing should turn smoothly when held in the hand under a light thrust load. A light drag caused by the lubricant fill is normal. If the bearing is noisy, rough, or dry, replace the complete bearing assembly with a new bearing.

(6) Check the condition of the pivot stud spring clips on back side of clutch fork. If the clips are broken or distorted, replace the clutch fork.

INSTALLATION

(1) The pivot ball pocket in the fork, as well as the fork arms should be lubricated with grease prior to installation.

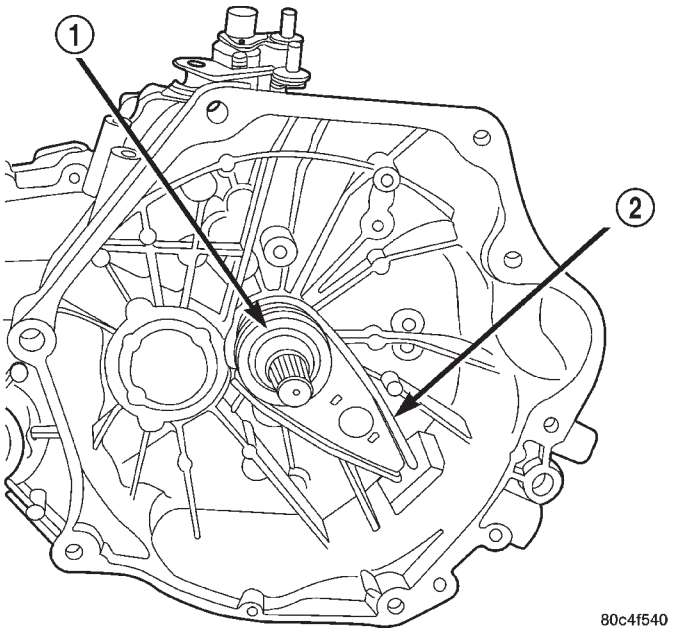

Fig. 34 Release Bearing and Fork

1 – RELEASE BEARING
2 – PIVOT FORK

(2) Assemble the fork to the bearing (Fig. 34). The small pegs on the bearing must go over the fork arms.

(3) Slide the bearing and fork assembly onto the input shaft bearing retainer, as a unit.

(4) Snap the clutch fork onto the pivot ball.

(5) Reinstall transaxle assembly. Refer to TRANSAXLE for proper procedures.

CLUTCH MASTER CYLINDER

REMOVAL

NOTE: Replacement master cylinder assemblies come pre-filled with fluid. No fluid service or system bleeding should be required.

(1) Remove air cleaner assembly (Fig. 35).

(2) Disconnect battery negative cable.

(3) Raise vehicle on hoist.

(4) Using Tool 6638A, disconnect clutch hydraulic quick-connect (Fig. 37) (Fig. 36).

REMOVAL AND INSTALLATION (Continued)

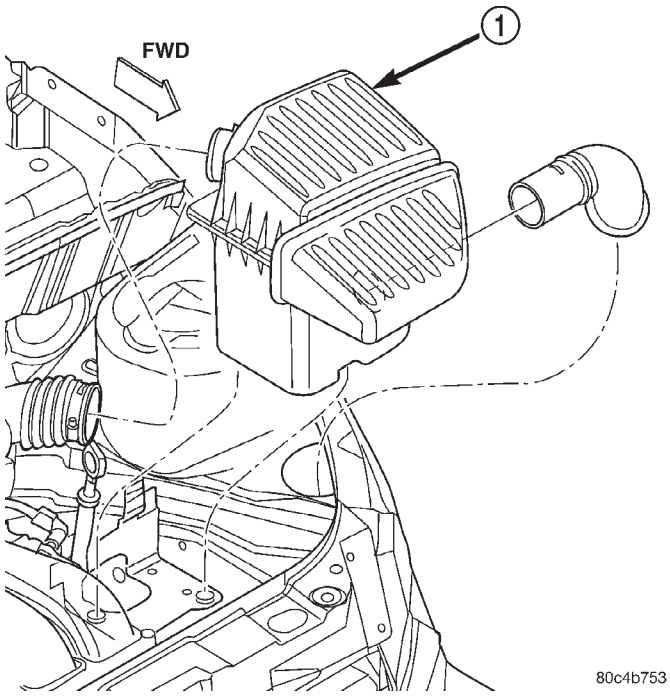

Fig. 35 Air Cleaner Assembly Removal/Installation

1 – AIR CLEANER ASSEMBLY

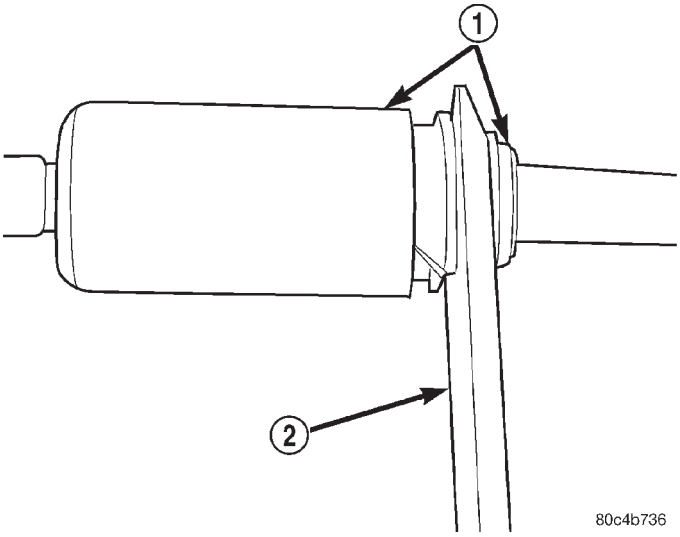

Fig. 36 Disconnect Hydraulic Circuit Using Tool 6638A

1 – QUICK CONNECT FITTING
2 – TOOL 6638A

(5) Remove hydraulic hose from left rail retainer (Fig. 41).

(6) Lower vehicle.

(7) Remove PDC bracket and position out of way.

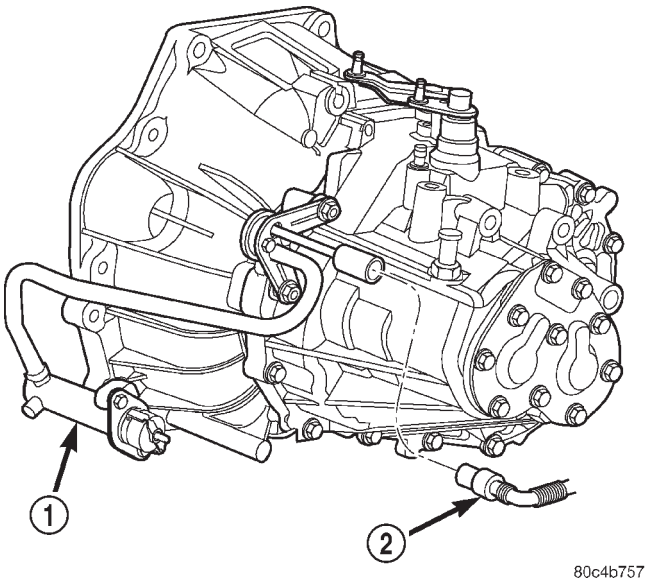

Fig. 37 Slave Cylinder and Hydraulic Supply Tube

1 – SLAVE CYLINDER
2 – HYDRAULIC TUBE

(8) Remove lower instrument panel bezel (Fig. 38).

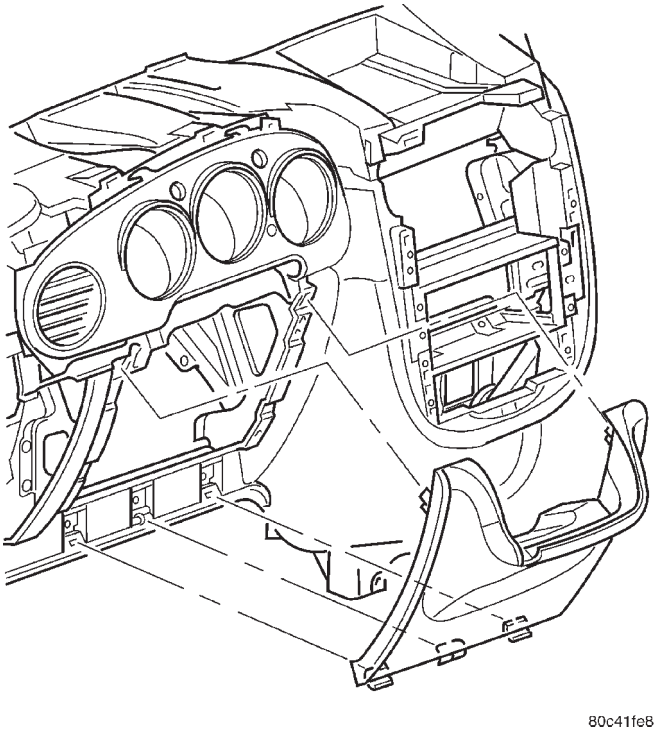

Fig. 38 Left Lower Instrument Panel Bezel

(9) Remove clip and disconnect the brake booster input rod from the brake pedal pin (Fig. 39).

(10) Remove the brake booster mounting nuts (Fig. 39).

REMOVAL AND INSTALLATION (Continued)

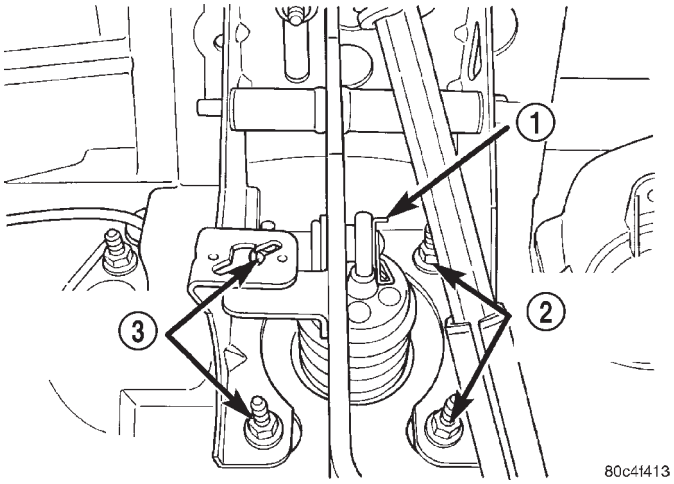

Fig. 39 Brake Booster Mounting Nuts

1 – CLIP
2 – BOOSTER MOUNTING NUTS
3 – BOOSTER MOUNTING NUTS

(11) Slide brake booster forward enough to gain access to and remove clutch master cylinder.

(12) Remove clutch master cylinder reservoir (Fig. 41).

(13) Disconnect clutch master cylinder rod from clutch pedal.

(14) Remove two clutch master cylinder retaining nuts (Fig. 40).

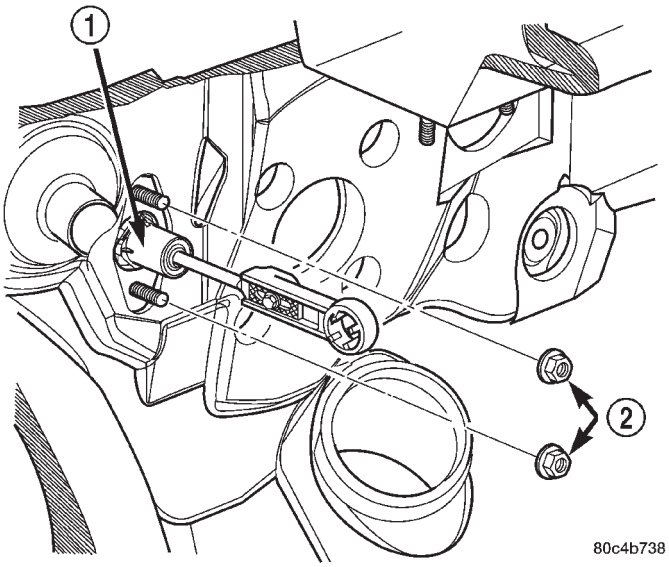

Fig. 40 Master Cylinder Mounting Nuts

1 – MASTER CYLINDER
2 – NUTS

CAUTION: Use care when removing clutch master cylinder from engine compartment. Aggressive handling can result in a damaged hydraulic tube and improper clutch release operation upon reassembly.

(15) Remove master cylinder from mounting position and carefully work hydraulic pipe from out of engine compartment (Fig. 41). If necessary, unfasten ABS module and purge solenoid assembly to gain necessary clearance.

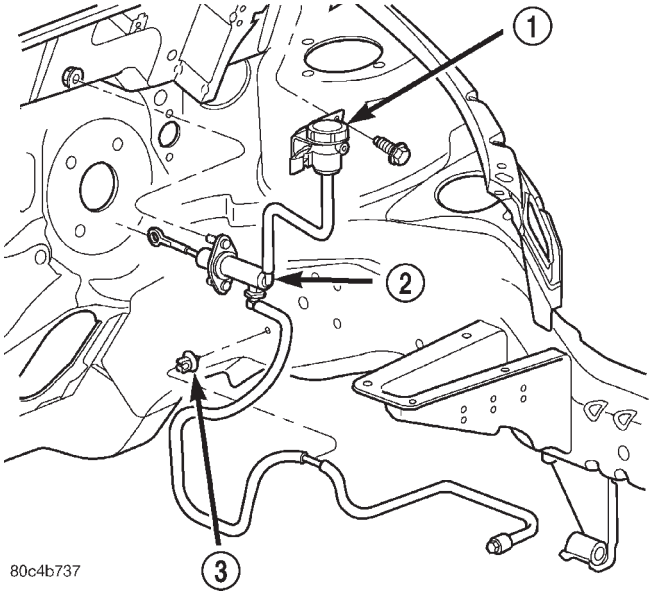

Fig. 41 Clutch Master Cylinder Removal/Installation

1 – RESERVOIR
2 – MASTER CYLINDER
3 – RETAINER

INSTALLATION

NOTE: Replacement master cylinder assemblies come pre-filled with fluid. No fluid service or system bleeding should be required.

(1) Install clutch master cylinder into position (Fig. 41) and carefully route hydraulic pipe into position as removed.

(2) Install clutch master cylinder reservoir (Fig. 41).

(3) Connect clutch master cylinder rod to clutch pedal pin. An audible “click” should be heard. If damaged, replace nylon retainer.

(4) Install and torque two clutch master cylinder-to-cowl panel retaining nuts (Fig. 40) to 34 N·m (25 ft. lbs.) torque.

(5) Adjust clutch pedal position. Loosen adjustment screw (Fig. 42) and gently lift upward on clutch pedal. Tighten adjustment screw to 8 N·m (70 in. lbs.) torque.

(6) Install brake booster into position. Connect push rod to brake pedal pin (Fig. 39).

(7) Install and torque brake booster-to-cowl panel nuts (Fig. 39) to 34 N·m (25 ft. lbs.). Install push rod retaining clip.

REMOVAL AND INSTALLATION (Continued)

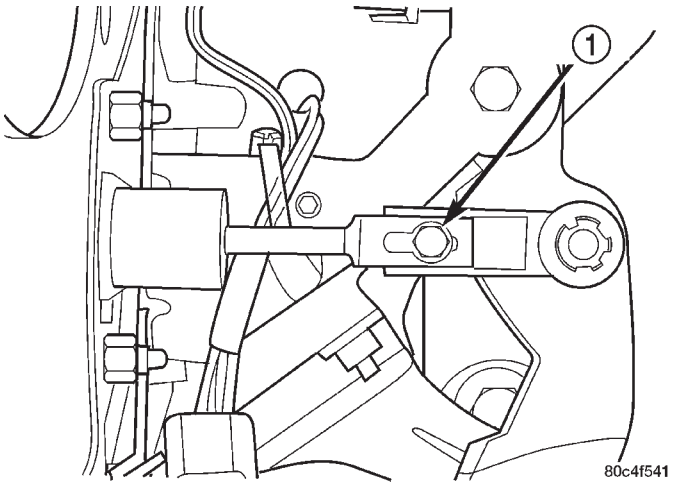

Fig. 42 Clutch Pedal Adjustment

1 – ADJUSTMENT SCREW

(8) Replace stop lamp switch. Refer to Stop Lamp Switch Removal and Installation.

(9) Install lower instrument panel bezel (Fig. 38).

(10) Install PDC bracket into position.

(11) Raise vehicle on hoist.

(12) Install clutch master cylinder hydraulic pipe into left rail retainer (Fig. 41).

(13) Connect hydraulic pipe to clutch slave cylinder (Fig. 37). An audible “click” should be heard. Verify connection by pulling outward on connection.

(14) Lower vehicle.

(15) Connect battery negative cable.

(16) Install air cleaner assembly (Fig. 35).

(17) Verify that reservoir is full. Top off with DOT 3 brake fluid if necessary.

(18) Actuate clutch pedal a minimum of ten times to allow any air ingested into the system to vent to the master cylinder reservoir.

(19) Verify proper clutch release system operation.

CLUTCH SLAVE CYLINDER

REMOVAL

NOTE: Replacement slave cylinder assemblies come pre-filled with fluid. No fluid service or system bleeding should be required.

(1) Raise vehicle on hoist.

(2) Disconnect clutch hydraulic quick connect using tool 6638A (Fig. 43).

(3) Remove damper bracket nuts (Fig. 44).

(4) Remove slave cylinder mounting bolts (Fig. 44).

(5) Remove slave cylinder from vehicle.

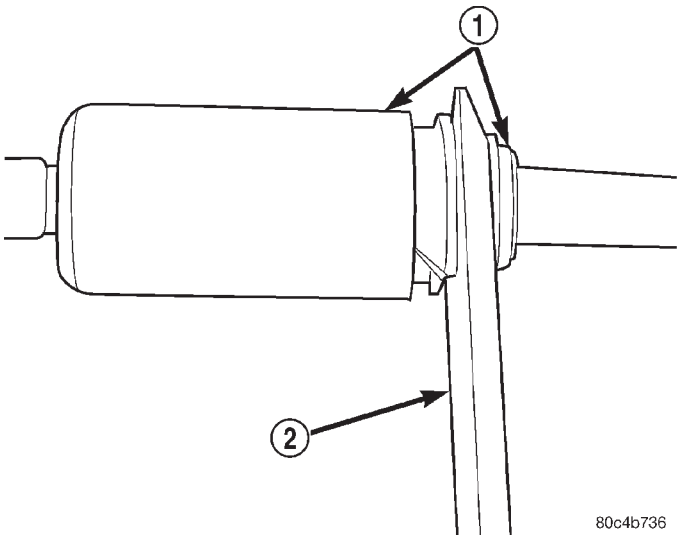

Fig. 43 Disconnect Quick-Connect Using Tool 6638A

1 – QUICK CONNECT FITTING

2 – TOOL 6638A

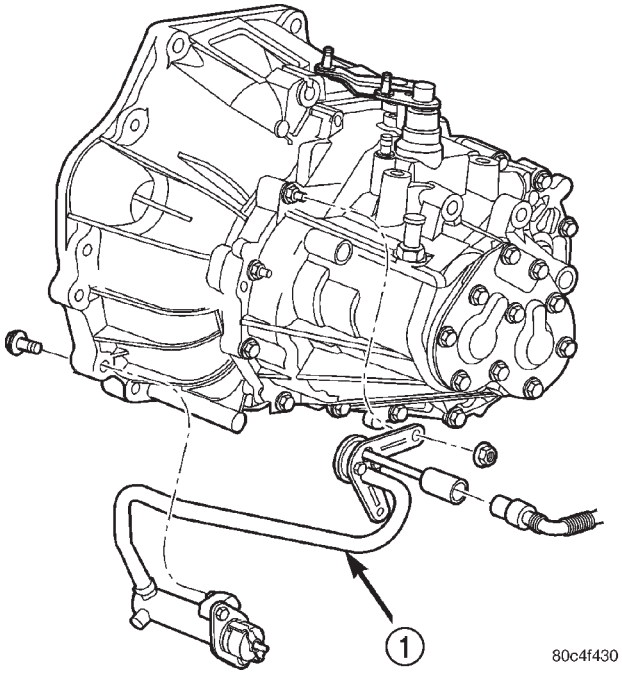

Fig. 44 Slave Cylinder Removal/Installation

1 – SLAVE CYLINDER

INSTALLATION

NOTE: Replacement slave cylinder assemblies come pre-filled with fluid. No fluid service or system bleeding should be required.

(1) Install the slave cylinder assembly into position on transaxle (Fig. 44). Start damper and slave cylinder fasteners by hand.

REMOVAL AND INSTALLATION (Continued)

(2) Tighten slave cylinder bolts to 19 N·m (170 in. lbs.) torque.

(3) Tighten damper nuts to 23 N·m (200 in. lbs.) torque.

(4) Connect clutch hydraulic supply tube (Fig. 44). An audible click should be heard. Verify connection by pulling outward.

(5) Lower vehicle.

(6) Verify clutch master cylinder reservoir is full. Top off with DOT 3 brake fluid if necessary.

(7) Actuate clutch pedal a minimum of ten times to allow any air ingested into the system to vent to the master cylinder reservoir.

(8) Verify proper clutch release system operation.

(9) If slave cylinder was replaced with a new unit, verify that the shipping strap has been broken. If not, remove straps to prevent high pedal effort.

CLEANING AND INSPECTION

CLUTCH CONTAMINATION

Fluid contamination is a frequent cause of clutch malfunctions. Oil, grease, water, or other fluids on the clutch contact surfaces will cause faulty operation.

During inspection, note if any components are contaminated. Look for evidence of oil, grease, or water/road splash on clutch components.

OIL CONTAMINATION

Oil contamination indicates a leak at the rear main seal and/or transaxle input shaft. Oil leaks produce a residue of oil on the transaxle housing interior, clutch cover and flywheel. Heat buildup caused by slippage can bake the oil residue onto the components. This glaze-like residue ranges in color from amber to black.

GREASE CONTAMINATION

Grease contamination is usually a product of overlubrication. During clutch service, apply only a small amount of grease to the input shaft splines. Excess grease may be thrown off during operation, contaminating the disc.

ROAD SPLASH/WATER CONTAMINATION

Road splash contamination is usually caused by driving the vehicle through deep water puddles. Water can be forced into the clutch housing, causing clutch components to become contaminated. Facing of disc will absorb moisture and bond to the flywheel and/or, pressure plate, if vehicle is allowed to stand for some time before use. If this condition occurs, replacement of clutch assembly may be required. Drive the vehicle until normal clutch operating temperature has been obtained. This will dry off disc assembly, pressure plate, and flywheel.

CLEANING PRECAUTIONS

Condensation from steam vapors tend to accumulate on the internal clutch mechanism when the vehicle is steam cleaned. Facing of disc will absorb moisture and will bond to flywheel and/or pressure plate, if vehicle is allowed to stand for some time before use. If this condition occurs, it may require replacement of clutch assembly. After cleaning, drive the vehicle to its normal clutch operating temperature. This will dry off disc assembly, pressure plate, and flywheel.

SPECIFICATIONS

TORQUE

DESCRIPTION	TORQUE
Clutch Pedal Pivot Shaft Nut	34 N·m (25 ft. lbs.)
Master Cylinder Pushrod Adj. Screw	8 N·m (70 in. lbs.)
Modular Clutch-to-Drive Plate Bolts	88 N·m (65 ft. lbs.)
Transaxle-to-Engine Mounting Bolts	95 N·m (70 ft. lbs.)

CLUTCH

TABLE OF CONTENTS

page

REMOVAL AND INSTALLATION
CLUTCH INTERLOCK/UPSTOP SWITCH. 1
CLUTCH MASTER CYLINDER. 2

REMOVAL AND INSTALLATION

CLUTCH INTERLOCK/UPSTOP SWITCH

REMOVAL

(1) Remove lower instrument panel bezel (Fig. 1).

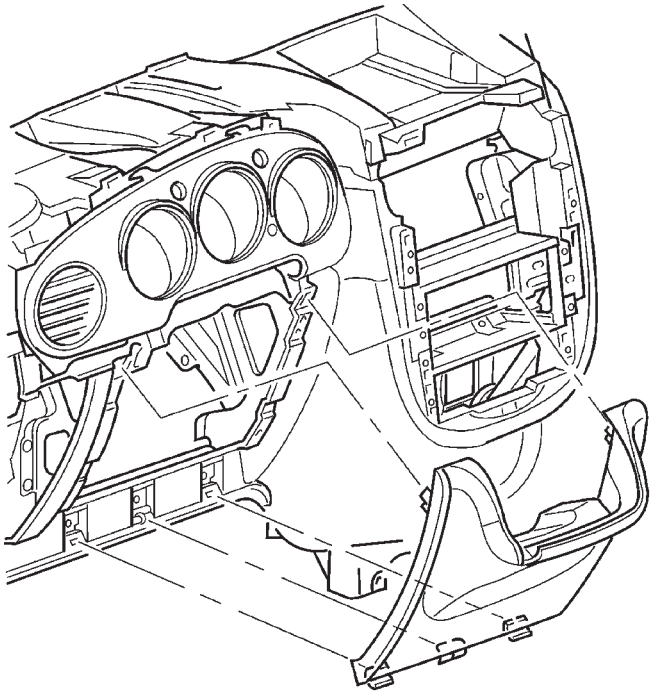

Fig. 1 Lower Instrument Panel Bezel—Typical

(2) Disconnect interlock/upstop switch connector.

(3) Remove interlock and upstop switches from pedal bracket assembly (Fig. 2). Switches are released by depressing four plastic wing tabs on each switch.

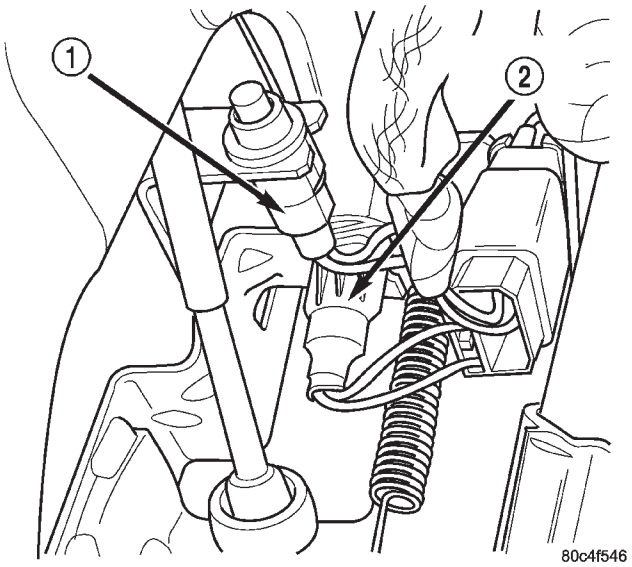

Fig. 2 Interlock/Upstop Switch at Pedal Bracket

1 – INTERLOCK SWITCH
2 – UPSTOP SWITCH

INSTALLATION

(1) Install interlock and upstop switches to pedal bracket assembly (Fig. 2).
(2) Connect interlock/upstop switch connector.
(3) Install lower instrument panel bezel (Fig. 1).
(4) Verify proper interlock/upstop switch operation.

REMOVAL AND INSTALLATION (Continued)

CLUTCH MASTER CYLINDER

REMOVAL

NOTE: Replacement master cylinder assemblies come pre-filled with fluid. No fluid service or system bleeding should be required.

(1) Remove air cleaner assembly (Fig. 3).

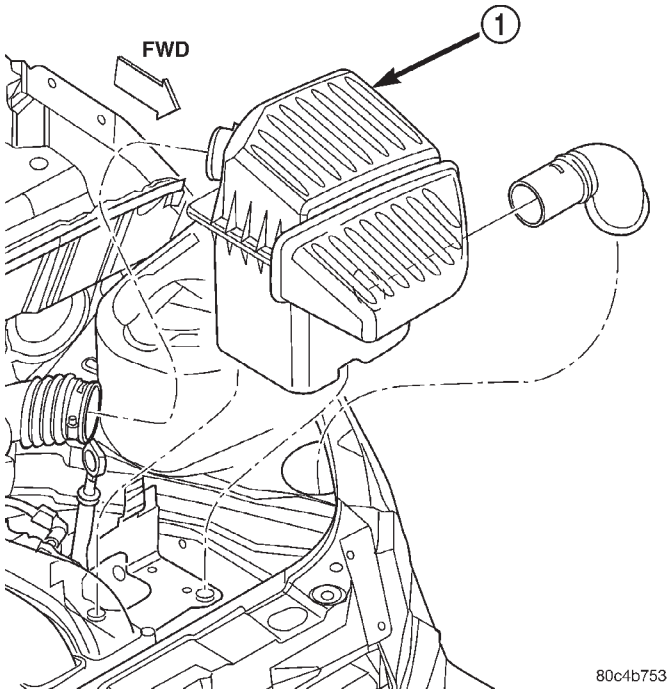

Fig. 3 Air Cleaner Assembly Removal/Installation
1 – AIR CLEANER ASSEMBLY

(2) Disconnect battery negative cable.
(3) Raise vehicle on hoist.
(4) Using Tool 6638A, disconnect clutch hydraulic quick-connect (Fig. 5) (Fig. 4).

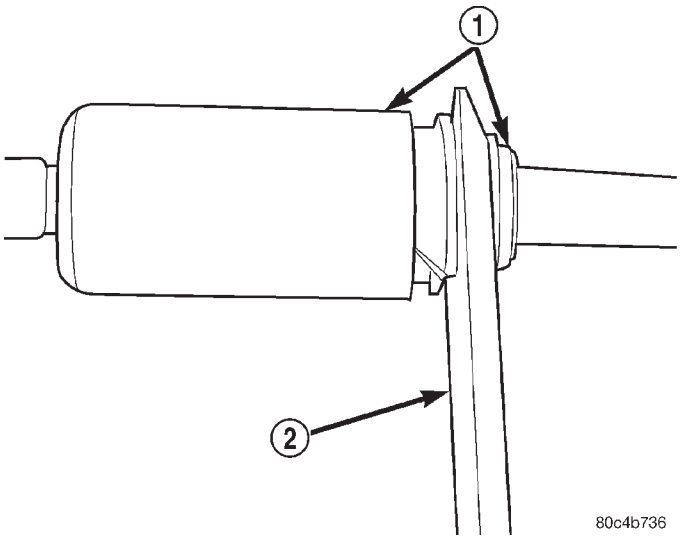

Fig. 4 Disconnect Hydraulic Circuit Using Tool 6638A
1 – QUICK CONNECT FITTING
2 – TOOL 6638A

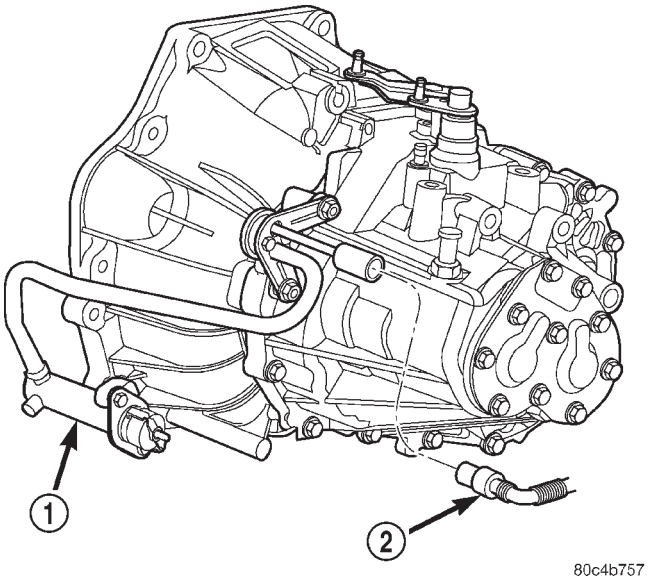

Fig. 5 Slave Cylinder and Hydraulic Supply Tube
1 – SLAVE CYLINDER
2 – HYDRAULIC TUBE

REMOVAL AND INSTALLATION (Continued)

(5) Remove hydraulic hose from left rail retainer (Fig. 6).

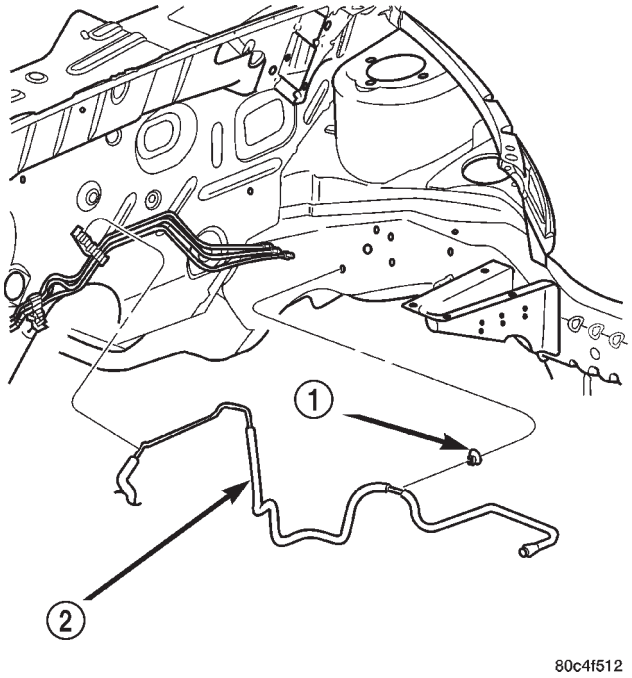

Fig. 6 Master Cylinder Pipe at Left Rail

1 – RETAINER
2 – MASTER CYLINDER PIPE

(6) Lower vehicle.
(7) Remove lower instrument panel bezel (Fig. 7).

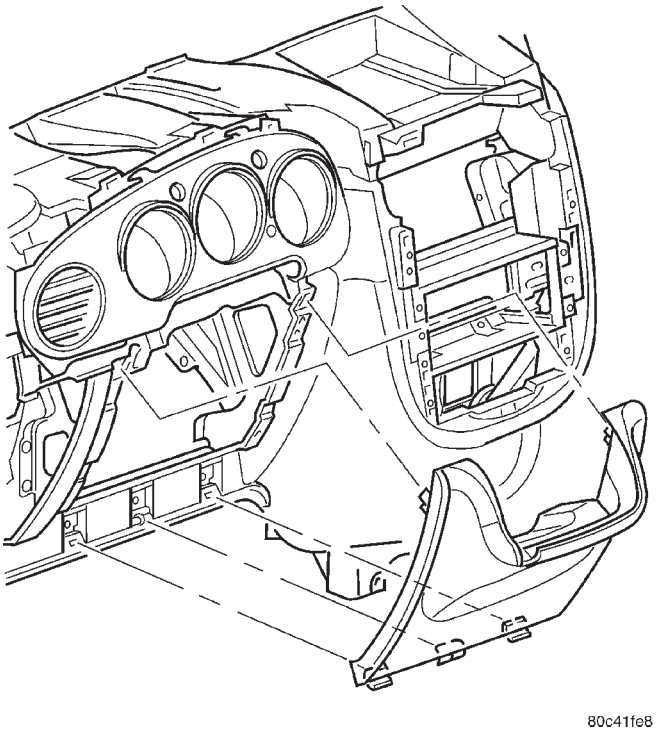

Fig. 7 Left Lower Instrument Panel Bezel—Typical

(8) Disconnect clutch master cylinder rod from clutch pedal.
(9) Remove coolant recovery bottle.
(10) Remove clutch master cylinder reservoir (Fig. 8).
(11) Disengage master cylinder hydraulic pipe from cowl retainer (Fig. 6).

CAUTION: Use care when removing clutch master cylinder from engine compartment. Aggressive handling can result in a damaged hydraulic tube and improper clutch release operation upon reassembly.

(12) Disengage master cylinder grommet and slide back (Fig. 8).
(13) Release master cylinder by rotating to disengage from pedal bracket assembly.
(14) Remove master cylinder from mounting position and carefully work hydraulic pipe from out of engine compartment (Fig. 8). If necessary, unfasten ABS module and purge solenoid assembly to gain necessary clearance.

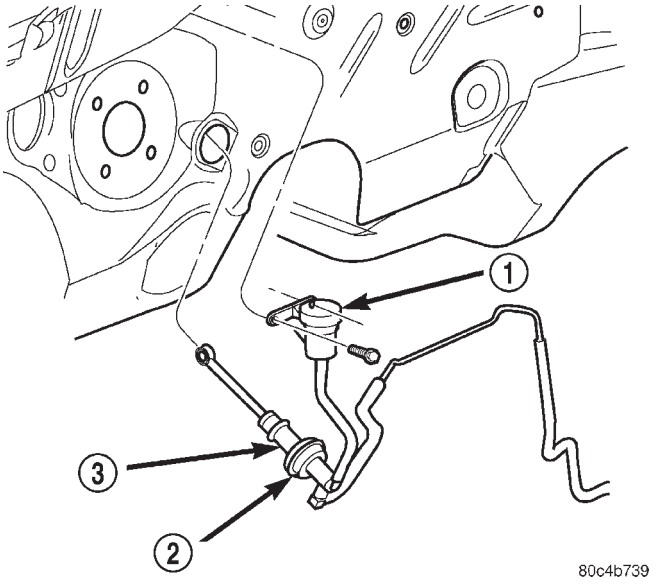

Fig. 8 Clutch Master Cylinder Removal/Installation

1 – RESERVOIR
2 – GROMMET
3 – MASTER CYLINDER

INSTALLATION

NOTE: Replacement master cylinder assemblies come pre-filled with fluid. No fluid service or system bleeding should be required.

(1) Carefully route hydraulic pipe into position as removed and install clutch master cylinder into position (Fig. 8). Rotate master cylinder to engage pedal bracket assembly.
(2) Install and secure grommet (Fig. 8).

REMOVAL AND INSTALLATION (Continued)

(3) Install hydraulic pipe into cowl retainer (Fig. 6).

(4) Install clutch master cylinder reservoir (Fig. 8).

(5) Raise vehicle.

(6) Install clutch master cylinder hydraulic pipe into left rail retainer (Fig. 6).

(7) Connect hydraulic pipe to clutch slave cylinder (Fig. 5). An audible “click” should be heard. Verify connection by pulling outward on connection.

(8) Lower vehicle.

(9) Connect clutch master cylinder rod to clutch pedal pin. An audible “click” should be heard. If damaged, replace nylon retainer.

(10) Install lower instrument panel bezel (Fig. 1).

(11) Connect battery negative cable.

(12) Install air cleaner assembly (Fig. 3).

(13) Verify that reservoir is full. Top off with DOT 3 brake fluid if necessary.

(14) Actuate clutch pedal a minimum of ten times to allow any air ingested into the system to vent to the master cylinder reservoir.

(15) Verify proper clutch release system operation.

COOLING SYSTEM

TABLE OF CONTENTS

	page
DESCRIPTION AND OPERATION	
COOLING SYSTEM	1
COOLANT	2
COOLANT RECOVERY SYSTEM	2
THERMOSTAT	3
RADIATOR	4
RADIATOR FAN	4
COOLING SYSTEM PRESSURE CAP	5
HOSE CLAMPS	6
WATER PUMP	6
AUTOMATIC TRANSMISSION OIL COOLER	7
ACCESSORY DRIVE BELTS	7
ENGINE BLOCK HEATER	8
DIAGNOSIS AND TESTING	
COOLING SYSTEM	9
THERMOSTAT	15
ACCESSORY DRIVE BELTS	16
WATER PUMP	16
COOLING SYSTEM FLOW CHECK	17
RADIATOR FAN MOTOR TEST	17
COOLANT CONCENTRATION TESTING	17
COOLING SYSTEM—LEAK TESTING	17
PRESSURE CAP TO FILLER NECK SEAL PRESSURE RELIEF CHECK	18
COOLING SYSTEM PRESSURE CAP	18
COOLING SYSTEM AERATION	19
COOLING SYSTEM DEAERATION	19
ENGINE BLOCK HEATER	19
SERVICE PROCEDURES	
COOLANT CONCENTRATION TESTING	20
COOLANT LEVEL CHECK—ROUTINE	20
COOLANT—ADDING ADDITIONAL	20
COOLANT LEVEL—SERVICING	20
COOLING SYSTEM—DRAINING	20
COOLING SYSTEM—FILLING	21
REMOVAL AND INSTALLATION	
WATER PUMP	22
WATER PUMP INLET TUBE	23
THERMOSTAT	23
THERMOSTAT HOUSING	24
RADIATOR	25
RADIATOR DRAINCOCK	26
RADIATOR FAN	27
AUTOMATIC TRANSMISSION OIL COOLER	28
COOLANT RECOVERY BOTTLE	28
ENGINE BLOCK HEATER	29
ACCESSORY DRIVE BELTS	30
AUTOMATIC BELT TENSIONER & PULLEY	32
CLEANING AND INSPECTION	
WATER PUMP	32
ACCESSORY DRIVE BELTS	33
COOLING SYSTEM PRESSURE CAP	33
COOLING SYSTEM	33
RADIATOR	34
AUTOMATIC TRANSMISSION OIL COOLER	34
ADJUSTMENTS	
BELT TENSION	34
SPECIFICATIONS	
COOLANT PERFORMANCE	34
COOLING SYSTEM CAPACITY	35
TORQUE SPECIFICATIONS	35
SPECIAL TOOLS	
COOLING SYSTEM	35

DESCRIPTION AND OPERATION

COOLING SYSTEM

DESCRIPTION

The cooling system consists of an engine cooling module, thermostat, coolant recovery/reserve system, coolant, and a water pump. The engine cooling module (Fig. 1) consists of a radiator, electric fan motor, fan, shroud, transmission oil cooler, hoses, clamps, air conditioning condenser and transmission oil lines.

DESCRIPTION AND OPERATION (Continued)

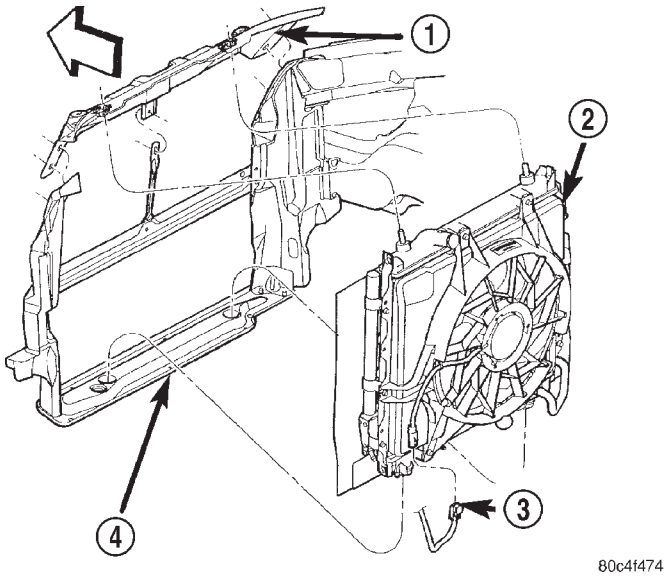

Fig. 1 Cooling Module

1 – UPPER RADIATOR CROSSMEMBER
2 – COOLING MODULE
3 – RADIATOR FAN CONNECTOR
4 – LOWER RADIATOR CROSSMEMBER

OPERATION

The cooling systems primary purpose is to maintain engine temperature in a range that will provide satisfactory engine performance and emission levels under all expected driving conditions. The system does this by transferring heat from the engine metal to the coolant, then moves this heated coolant to the radiator where this heat is transferred to the ambient air. It also provides hot water (coolant) for heater performance and cooling for the automatic transmission oil.

- When the Engine is cold: The thermostat is closed and the cooling system has no flow through the radiator. The coolant flows through the engine, heater system which also serves as the bypass.
- When the Engine is warm: Thermostat is open and the cooling system has flow through the radiator, engine, heater system which also serves as the bypass.

The coolant flow circuit is shown in (Fig. 2).

COOLANT

DESCRIPTION

CAUTION: Use of Propylene Glycol based coolants is not recommended, as they provide less freeze protection and less corrosion protection.

The use of aluminum cylinder blocks, cylinder heads, and water pumps requires special corrosion protection. Mopar® Antifreeze/Coolant, 5 Year/100,000 Mile Formula (orange in color), or the equivalent ethylene glycol base coolant with corrosion inhibitors (called HOAT, for Hybrid Organic Additive Technology) is recommended. This coolant offers the best engine cooling without corrosion when mixed with 50% Ethylene Glycol and 50% distilled water to obtain a freeze point of -37°C (-35°F). If it loses color or becomes contaminated, drain, flush, and replace with fresh properly mixed coolant solution. Mixing of coolants other than specified (non-HOAT), will reduce the 5 year/100,000 mile corrosion protection.

OPERATION

The cooling system is designed around the coolant. The coolant must accept heat from engine metal, in the cylinder head area near the exhaust valves and engine block. The coolant carries heat to the radiator where the tube/fin radiator can transfer the heat to the air.

WARNING: ANTIFREEZE IS AN ETHYLENE GLYCOL BASE COOLANT AND IS HARMFUL IF SWALLOWED OR INHALED. IF SWALLOWED, DRINK TWO GLASSES OF WATER AND INDUCE VOMITING. IF INHALED, MOVE TO FRESH AIR AREA. SEEK MEDICAL ATTENTION IMMEDIATELY. DO NOT STORE IN OPEN OR UNMARKED CONTAINERS. WASH SKIN AND CLOTHING THOROUGHLY AFTER COMING IN CONTACT WITH ETHYLENE GLYCOL. KEEP OUT OF REACH OF CHILDREN. DISPOSE OF GLYCOL BASE COOLANT PROPERLY, CONTACT YOUR DEALER OR GOVERNMENT AGENCY FOR LOCATION OF COLLECTION CENTER IN YOUR AREA. DO NOT OPEN A COOLING SYSTEM WHEN THE ENGINE IS AT OPERATING TEMPERATURE OR HOT UNDER PRESSURE, PERSONAL INJURY CAN RESULT. AVOID RADIATOR COOLING FAN WHEN ENGINE COMPARTMENT RELATED SERVICE IS PERFORMED, PERSONAL INJURY CAN RESULT.

COOLANT RECOVERY SYSTEM

DESCRIPTION

The coolant recovery system consist of a bottle mounted to the cowl, a hose connecting the bottle to the coolant outlet connector on the engine, and a pressure cap (Fig. 3).

DESCRIPTION AND OPERATION (Continued)

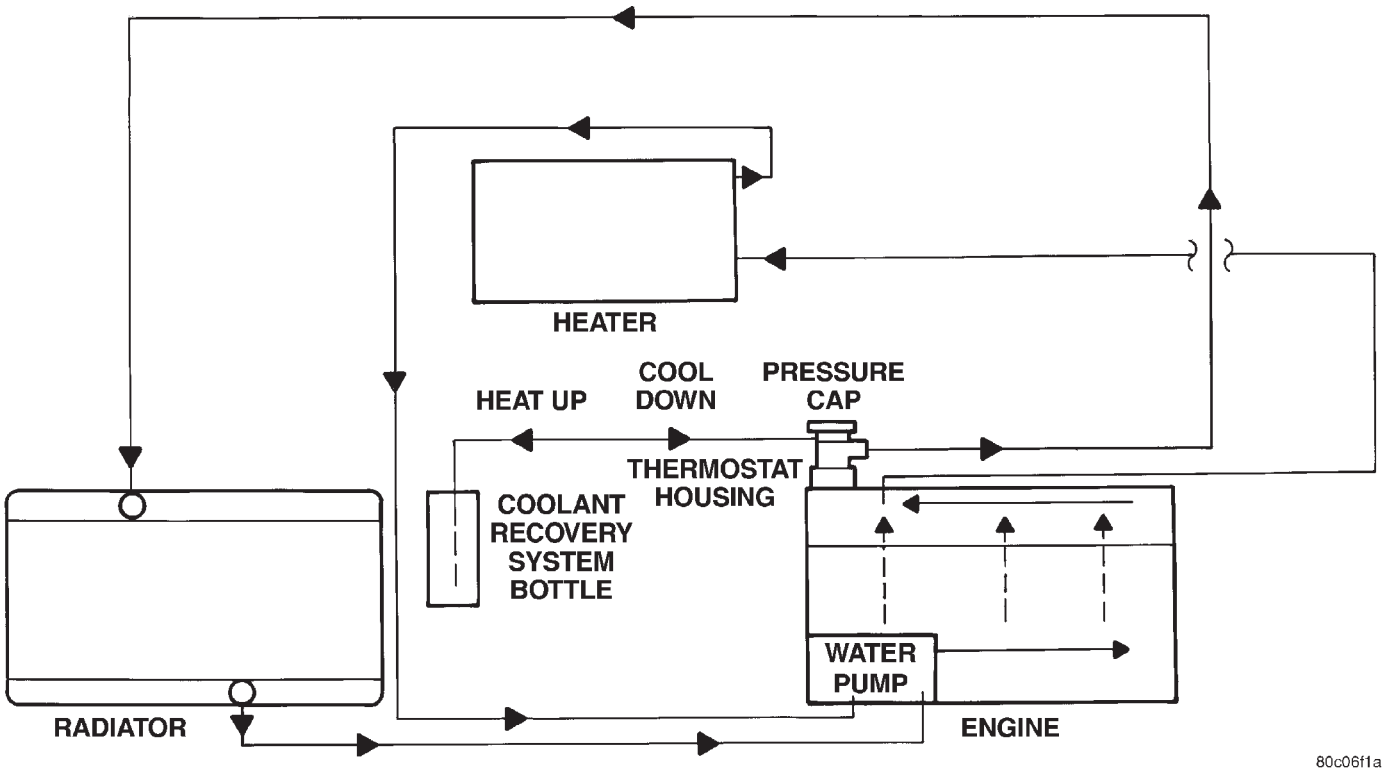

Fig. 2 Cooling System Operation

OPERATION

The system works in conjunction with the cooling system pressure cap to utilize thermal expansion and contraction of the coolant to keep the coolant free of trapped air. The system provides space for expansion and contraction. Also, the system provides a convenient and safe method for checking and adjusting the coolant level at atmospheric pressure without removing the pressure cap. It also provides some reserve coolant to compensate for minor leaks and evaporation or boiling losses.

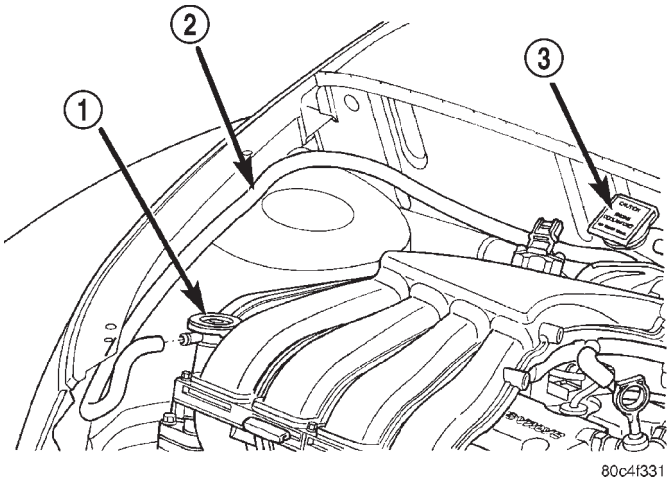

Fig. 3 Coolant Recovery System

1 – PRESSURE CAP
2 – HOSE
3 – COOLANT RECOVERY BOTTLE

THERMOSTAT

DESCRIPTION

The thermostat is located on the front of the engine (radiator side) in the thermostat housing/coolant outlet connector (Fig. 4). The thermostat has an air bleed vent located on its flange (Fig. 5). The air bleed vent and the locator dimple on thermostat seal provide for proper positioning of thermostat in outlet connector. A cooling system air bleed valve is located in thermostat housing to assist in air removal when filling the cooling system.

OPERATION

The engine cooling thermostat is a wax pellet driven, reverse poppet choke type. The thermostat is designed to provide the fastest warm up possible by preventing leakage through it and to guarantee a minimum engine operating temperature of 88 to 93°C (192 to 199°F). The thermostat will also automatically reach wide open so it will not restrict flow to the radiator as the temperature of the coolant rises in hot weather to around 104°C (220°F). Above this temperature the coolant temperature is controlled by the radiator, fan, and ambient temperature, not the thermostat.

DESCRIPTION AND OPERATION (Continued)

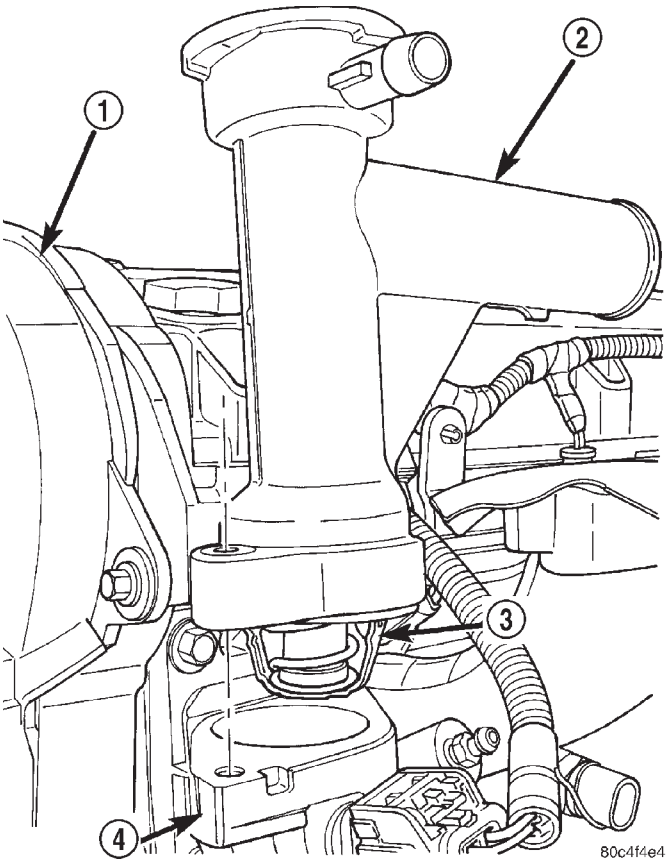

Fig. 4 Thermostat and Coolant Outlet Connector

1 – TIMING BELT COVER
2 – OUTLET CONNECTOR
3 – THERMOSTAT
4 – HOUSING

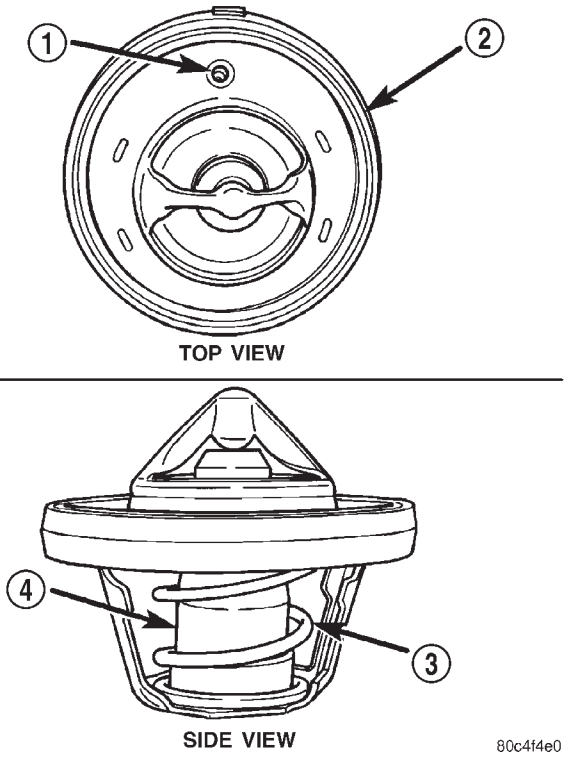

Fig. 5 Thermostat

1 – AIR BLEED
2 – SEAL
3 – RETURN SPRING
4 – PELLET CHAMBER

The thermostat is operated by a wax filled chamber (pellet) which is sealed (Fig. 5). When coolant reaches a predetermined temperature, the wax expands enough to overcome the closing spring (Fig. 5) and water pump pressure, which forces the thermostat to open. Coolant leakage into the wax pellet will cause a thermostat to fail in the open position. Do not attempt to free-up a stuck open thermostat.

If the thermostat is stuck open or allows coolant leakage through it, the engine will not operate at the proper temperature for obtaining engine fuel efficiency, performance and emissions levels. If this condition occurs, a diagnostic trouble code will be set and a MIL light will be turned on. Refer to the Powertrain Diagnostic Procedures manual for further information and diagnostics provided.

RADIATOR

DESCRIPTION

The radiator is a down-flow type (vertical tubes) with design features that provide greater strength, as well as sufficient heat transfer capabilities to keep the engine coolant within operating temperatures.

The radiator has an aluminum core with plastic tanks. Although stronger than brass, plastic tanks are subject to damage by impact. Always handle radiator with care.

OPERATION

The radiator functions as a heat exchanger, using the air flow induced by vehicle movement or by the electric radiator fan across the exterior surfaces of the radiator tubes. This heat is then transferred from the coolant and into the passing air.

RADIATOR FAN

DESCRIPTION

The radiator cooling fan is a dual-speed electric motor driven fan. The radiator fan assembly includes an electric motor, fan blade, and a support shroud that is attached to the radiator (Fig. 6). The radiator fan is serviced as an assembly.

OPERATION

Radiator fan operation is control by the Powertrain Control Module (PCM) with inputs from the temper-

DESCRIPTION AND OPERATION (Continued)

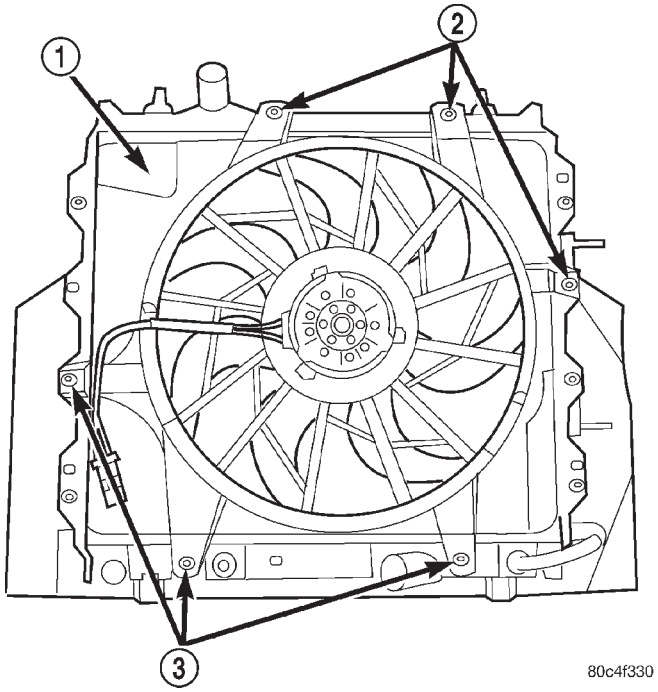

Fig. 6 Radiator Fan

1 – RADIATOR FAN
2 – SCREWS
3 – SCREWS

ature of the coolant, which is sensed by the coolant temperature sensor, and vehicle speed which is measured by the vehicle speed sensor. The PCM turns on the fan through either the high or low speed fan relay. The PCM provides a ground to the relay's control circuit. The fan relays are located in the Power Distribution Center (PDC) (Fig. 7). Refer to the label beneath the PDC cover for location of fan relays.

Refer to Radiator Fan Operation Chart for fan operation specifications. For fan circuit wiring diagrams, refer to WIRING DIAGRAMS.

If the cooling fan is inoperative or a Diagnostic Trouble Code (DTC) related to fan control has been set, refer to the appropriate Diagnostic Information for diagnostic procedures.

COOLING SYSTEM PRESSURE CAP

DESCRIPTION

The cooling system pressure cap (Fig. 8) is located on the coolant outlet connector near the front of the cylinder head. The pressure cap is constructed of stainless steel. Rubber seals provide sealing to the outlet connector and to the coolant recovery system. A calibrated spring located between the cap and the connector seal provides for cooling system pressure release.

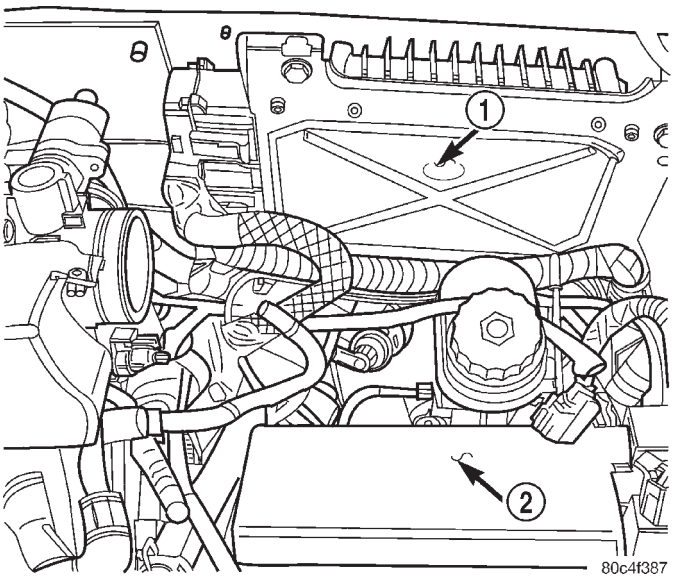

Fig. 7 Power Distribution Center (PDC)

1 – PCM
2 – PDC

RADIATOR FAN OPERATION CHART

Radiator Fan Control		
	Low Speed	**High Speed**
A/C Off –vehicle speed < 70.8 km/h (44 mph)		
Fan On:	96.6° C (206° F)	103° C (219° F)
Fan Off:	92.7° C (199° F)	98.8° C (210° F)
A/C Off –vehicle speed > 70.8 km/h (44 mph) (until vehicle speed drops below 58 km/h (36 mph)		
Fan On:	Off	103° C (219° F)
Fan Off:		98.8° C (210° F)
A/C On –any vehicle speed		
Fan On:	Off	82.2° C (180° F)
Fan Off:		80° C (176° F)

OPERATION

The pressure cap allows the cooling system to operate at higher than atmospheric pressure. The higher pressure raises the coolant boiling point, allowing increased radiator cooling capacity. The pressure cap will release cooling system pressure in a range of 97–124 kPa (14–18 psi).

DESCRIPTION AND OPERATION (Continued)

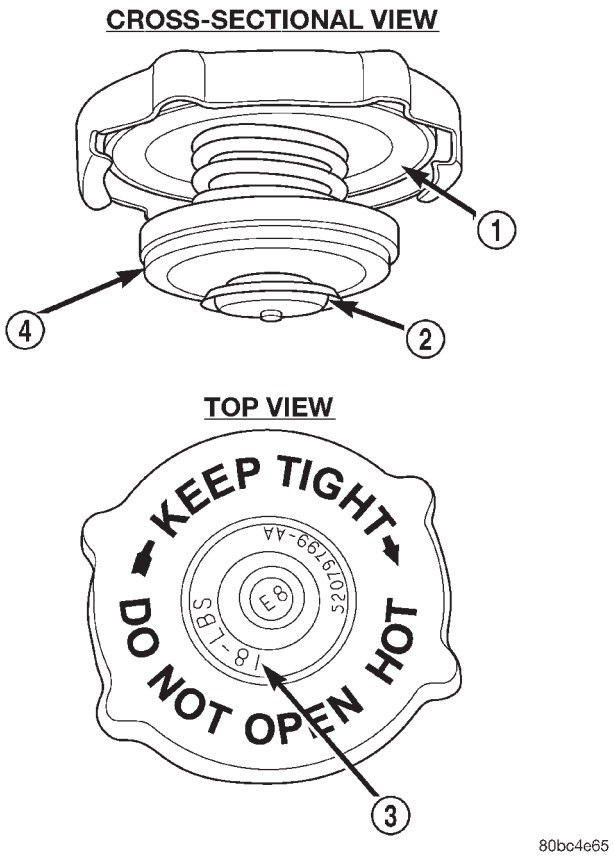

Fig. 8 Cooling System Pressure Cap

1 – FILLER NECK SEAL
2 – VACUUM VENT VALVE
3 – PRESSURE RATING
4 – PRESSURE VALVE

A vent valve located in the center of the cap allows a coolant flow to and from the coolant recovery system bottle. This valve is spring loaded in the closed position. However, it must be free to open during system cool-down. **If the valve is stuck shut, the radiator hoses will collapse on cool-down. Clean the vent valve (Fig. 8) to ensure proper sealing function.**

A gasket in the pressure cap seals the top of the filler neck so that vacuum is maintained to draw coolant back into the system from the coolant recovery system bottle.

HOSE CLAMPS

DESCRIPTION

The cooling system utilizes both worm drive and spring type hose clamps. If a spring type clamp replacement is necessary, replace with the original Mopar® equipment spring type clamp.

CAUTION: A number or letter is stamped into the tongue of constant tension clamps. If replacement is necessary, use only a original equipment clamp with matching number or letter (Fig. 9).

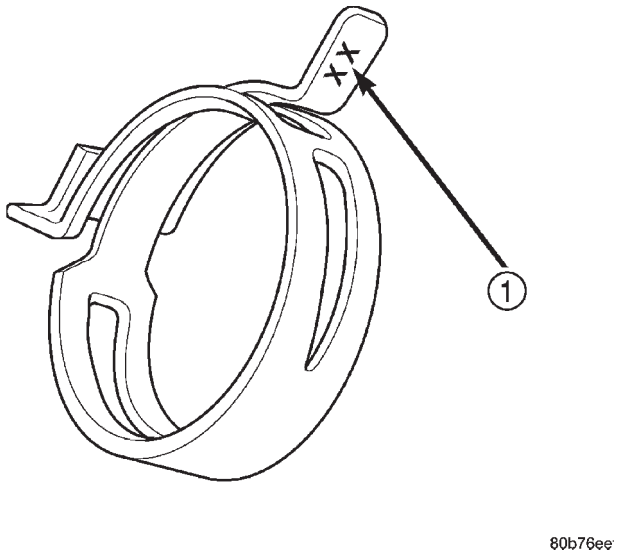

Fig. 9 Spring Clamp Size Location

1 – SPRING CLAMP SIZE LOCATION

OPERATION

The worm type hose clamp uses a specified torque value to maintain proper tension on a hose connection.

The spring type hose clamp applies constant tension on a hose connection. To remove a spring type hose clamp, only use constant tension clamp pliers designed to compress the hose clamp.

WATER PUMP

DESCRIPTION

The water pump has a cast aluminum body and housing with a stamped steel impeller. The water pump bolts directly to the block (Fig. 10). The cylinder block to water pump seal is provided by a rubber O-ring. The water pump is driven by the engine timing belt.

DESCRIPTION AND OPERATION (Continued)

OPERATION

The water pump is the heart of the cooling system, pumping the coolant through the engine block, cylinder head, heater system, hoses, and radiator.

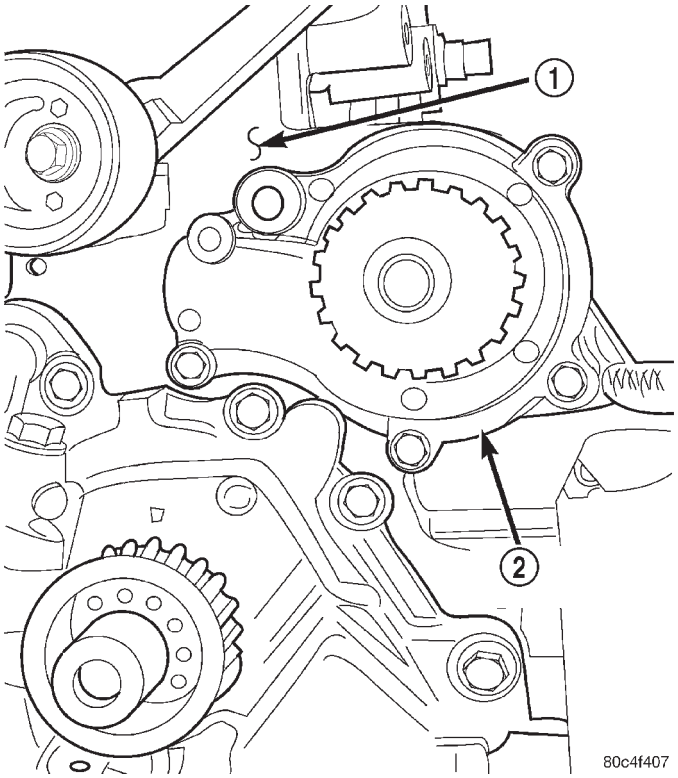

Fig. 10 Water Pump

1 – CYLINDER BLOCK
2 – WATER PUMP

AUTOMATIC TRANSMISSION OIL COOLER

DESCRIPTION

The automatic transmission oil cooler consist of an internal oil-to-coolant type mounted in the radiator lower tank, and an external air-to-oil type mounted in front of the radiator (Fig. 11). Rubber oil lines connect the oil coolers to the automatic transmission. Use only approved transmission oil cooler hose for replacement. The hoses are molded to the fit space available.

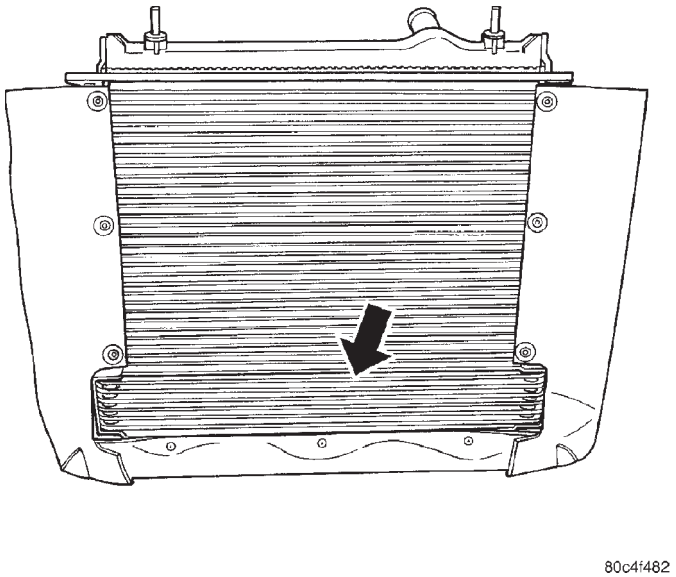

Fig. 11 Automatic Transmission Oil Cooler

ACCESSORY DRIVE BELTS

DESCRIPTION

The accessory drive consist of two Poly-V type drive belts (Fig. 12). One belt drives the generator, the other drives the power steering pump and air conditioning compressor (if equipped). The power steering/air conditioning belt is tensioned by an automatically controlled belt tensioner. The generator belt is manually tensioned using an adjusting bolt and a locking nut.

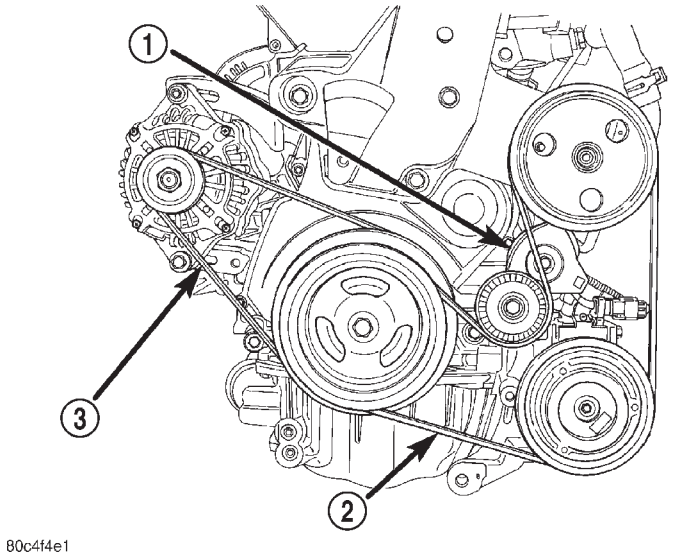

Fig. 12 Accessory Drive Belts

1 – AUTOMATIC BELT TENSIONER
2 – POWER STEERING PUMP / A/C COMPRESSOR BELT
3 – GENERATOR BELT

DESCRIPTION AND OPERATION (Continued)

ENGINE BLOCK HEATER

DESCRIPTION

The heater is mounted in a core hole (in place of a core hole plug) in the engine block, with the heating element immersed in coolant (Fig. 13). The engine block heater is available as an optional accessory. The heater is powered by ordinary house current (110 Volt AC) through a power cord and connector (Fig. 14).

OPERATION

When in operation, the engine block heater can provide easier engine starting and faster warm-up, when vehicle is operated in areas having extremely low temperatures.

CAUTION: The power cord must be secured in its retainer clips, and not positioned so it could contact linkages or exhaust manifolds and become damaged.

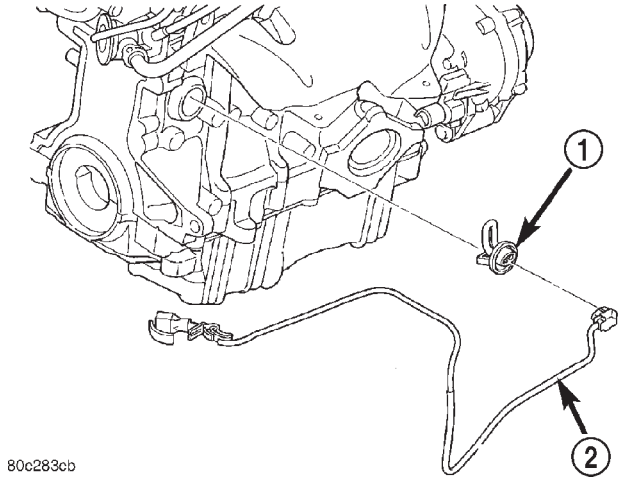

Fig. 13 Engine Block Heater

1 – BLOCK HEATER
2 – POWER CORD

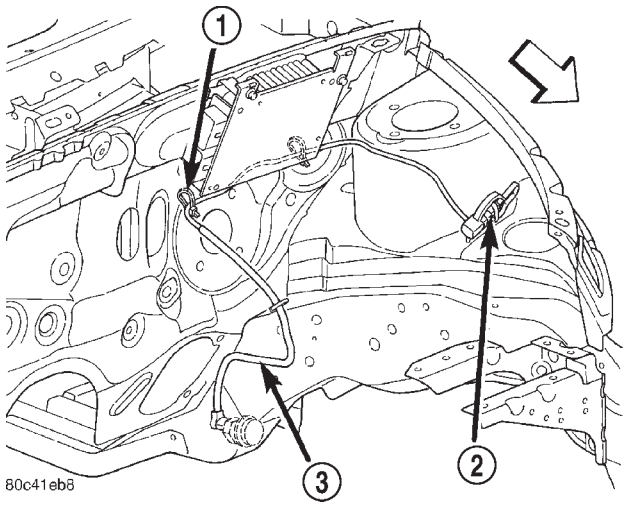

Fig. 14 Power Cord

1 – STRAP
2 – CONNECTOR
3 – POWER CORD

DIAGNOSIS AND TESTING

COOLING SYSTEM

CONDITION	POSSIBLE CAUSE	CORRECTION
TEMPERATURE GAUGE READS LOW	1. Has a Diagnostic Trouble Code (DTC) been set indicating a stuck open engine thermostat?	1. Refer to On Board Diagnostic in EMISSION CONTROL SYSTEMS. Replace thermostat, if necessary. If a (DTC) has not been set, the problem may be with the temperature gauge.
	2. Is the temperature gauge (if equipped) connected to the temperature gauge coolant sensor on the engine?	2. Check the connector at the engine coolant sensor. Refer to INSTRUMENT PANEL AND SYSTEMS. Repair as necessary.
	3. Is the temperature gauge (if equipped) operating OK?	3. Check Gauge operation. Refer to INSTRUMENT PANEL AND SYSTEMS. Repair as necessary.
	4. Coolant level low during cold ambient temperature, accompanied by poor heater performance.	4. Check coolant level in the coolant recovery/reserve container and the radiator. Inspect the system for leaks. Repair as necessary. Refer to WARNINGS in this section before removing pressure cap.
TEMPERATURE GAUGE READS HIGH OR ENGINE COOLANT WARNING LAMP ILLUMINATES. COOLANT MAY OR MAY NOT BE LOST FROM SYSTEM.	1. Trailer being towed, a steep hill being climbed, vehicle being operated in slow moving traffic, or engine idling during high ambient (outside) temperatures with air conditioning on. High altitudes could also cause these conditions.	1. This may be a temporary condition and repair is not necessary. Turn off the air conditioning and drive the vehicle without any of the previous conditions. Observe the temperature gauge the gauge should return to the normal range. If the gauge does not return to the normal range, determine the cause of the overheating and repair. Refer to POSSIBLE CAUSES in this section.
	2. Is temperature gauge (if equipped) reading correctly?	2. Check gauge. Refer to INSTRUMENT PANEL AND SYSTEMS. Repair as necessary.
	3. Is temperature warning lamp (if equipped) illuminating unnecessarily?	3. Check warning lamp operation. Refer to INSTRUMENT PANEL AND SYSTEMS. Repair as necessary.
	4. Coolant low in recovery/reserve bottle and radiator?	4. Check for coolant leaks and repair as necessary. Refer to Checking Cooling System for Leaks in this section.
	5. Pressure cap not installed tightly. If cap is loose, boiling point of coolant will be lowered. Also refer to the following step 6.	5. Tighten cap.

DIAGNOSIS AND TESTING (Continued)

CONDITION	POSSIBLE CAUSE	CORRECTION
	6. Poor seals at pressure cap.	6. (a) Check condition of cap and cap seals. Refer to pressure cap inspection. Replace cap if necessary. (b) Check condition of filler neck. If neck is bent or damaged, replace neck.
	7. Coolant level low in radiator, but not in coolant recovery/reserve bottle. This indicates the radiator is not drawing coolant from the coolant recovery/reserve bottle as the engine cools. As the engine cools, a vacuum is formed inside the cooling system. If the pressure cap seals are defective, or the cooling system has a leak, a vacuum cannot be formed.	7. (a) Check condition of pressure cap and cap seals. Replace cap if necessary. (b) Check condition of filler neck. Replace if damaged. (c) Check condition of hose from filler neck to coolant container. It should be tight at both ends without any kinks or tears. Replace hose as necessary. (d) Check coolant recovery/reserve bottle and hose for blockage. Repair as necessary.
	8. Freeze point of coolant not correct. Mixture ratio may be too rich.	8. Check coolant concentration. Refer to Coolant Concentration Testing in this section. Adjust glycol-to-water ratio as required.
	9. Coolant not flowing through system.	9. Check for coolant flow at filler neck with some coolant removed, engine warm, and thermostat open. Coolant should be observed flowing through filler neck. If flow is not observed, determine reason for lack of flow and repair as necessary.
	10. Air seals missing or improperly installed.	10. Inspect air seals. Correct as necessary.
	11. Radiator or A/C condenser fins are dirty or clogged.	11. Clean obstruction from fins.
	12. Radiator core is plugged or corroded.	12. Replace or clean radiator.
	13. Fuel or ignition system problems.	13. Refer to FUEL and IGNITION SYSTEM for diagnosis. Also refer to the appropriate Powertrain Diagnostic Procedure manual.
	14. Dragging Brakes.	14. Inspect brake system and repair as necessary. Refer to BRAKES for diagnosis.
	15. Bug screen or other aftermarket accessory is being used causing reduced air flow.	15. Remove bug screen or accessory.

DIAGNOSIS AND TESTING (Continued)

CONDITION	POSSIBLE CAUSE	CORRECTION
	16. Thermostat partially or completely closed.	16. Check thermostat operation and replace as necessary. Refer to thermostat in this section for procedure.
	17. Cooling fan not operating properly.	17. Check electric fan operation and repair as necessary.
	18. Cylinder head gasket leaking.	18. Check cylinder head gasket for leaks. Refer to testing cooling system for leaks. For repairs, refer to ENGINE.
	19. Heater core leaking.	19. Check heater core for leaks. Refer to HEATING AND AIR CONDITIONING and repair as necessary.
TEMPERATURE GAUGE READING IS INCONSISTENT (FLUCTUATES, CYCLES OR IS ERRATIC)	1. The gauge may cycle up and down. This is due to the cycling of the electric radiator fan.	1. A normal condition. No correction is necessary. If gauge cycling is the hot zone, check electric fan operation and repair as necessary. Refer to procedure in this section.
	2. During cold weather operation with the heater blower in the high position, the gauge reading may drop slightly.	2. A normal condition. No correction is necessary.
	3. Temperature gauge or engine mounted gauge sensor is defective or shorted.	3. Check operation of gauge and repair as necessary. Refer to INSTRUMENT PANEL AND SYSTEMS.
	4. Gauge reading rises when vehicle is brought to a stop after heavy use (engine still running).	4. A normal condition. No correction is necessary. The gauge should return to normal range after vehicle is driven.
	5. Gauge reading high after restarting a warmed-up (hot) engine.	5. A normal condition. No correction is necessary. The gauge should return to normal range after a few minutes of engine operation.
	6. Coolant level low in radiator (air will build up in the cooling system causing the thermostat to open late).	6. Check and correct coolant leaks. Refer to Testing Cooling System For Leaks in the section.
	7. Cylinder head gasket leaking allowing exhaust gas to enter cooling system. This will cause thermostat to open late.	7. (a) Check for cylinder head gasket leaks using Tool C-3685-A Block Leak Tester or the equivalent. Repair as necessary. (b) Check for coolant in the engine oil. Inspect for white steam emitting from exhaust system. Repair as necessary.
	8. Water pump impeller loose on shaft.	8. Check water pump and replace as necessary. Refer to Water Pump in this section.

DIAGNOSIS AND TESTING (Continued)

CONDITION	POSSIBLE CAUSE	CORRECTION
	9. Loose drive belt (water pump slipping). 10. Air leak on the suction side of water pump allows air to build up in cooling system. This will cause the thermostat to open late.	9. Check drive belt and correct as necessary. 10. Locate leak and repair as necessary.
PRESSURE CAP IS BLOWING OFF STEAM AND/OR COOLANT FLOWING INTO RECOVERY BOTTLE. TEMPERATURE GAUGE READING MAY BE ABOVE NORMAL, BUT NOT HIGH. COOLANT LEVEL MAY BE HIGH IN RECOVERY BOTTLE.	1. Pressure relief valve in pressure cap is defective.	1. Check condition of pressure cap and seals. Refer to Pressure Cap in this section. Replace as necessary.
COOLANT LOSS TO THE GROUND WITHOUT PRESSURE CAP BLOWOFF. GAUGE IS READING HIGH OR HOT.	1. Coolant leaks in radiator, cooling system hoses, water pump or engine.	1. Pressure test and repair as necessary. Refer to Testing Cooling System For Leaks in this section.
DETONATION OR PRE-IGNITION (NOT CAUSED BY IGNITION SYSTEM). GAUGE MAY OR MAY NOT BE READING HIGH.	1. Engine overheating. 2. Freeze point of coolant not correct.	1. Check reason for overheating and repair as necessary. 2. Check the freeze point of the coolant. Refer to Coolant Concentration Testing in this section. Adjust glycol-to-water ratio as required.
HOSE OR HOSES COLLAPSE WHEN ENGINE IS COOLING	1. Vacuum created in cooling system on engine cool-down is not being relieved through coolant recovery/reserve system.	1. (a) Pressure cap relief valve stuck. Refer to Pressure Cap in this section. Replace as necessary. (b) Hose between coolant recovery/reserve bottle and outlet connector is kinked. Repair as necessary. (c) Vent at coolant recovery/reserve bottle is plugged. Clean vent and repair as necessary. (d) Recovery/reserve bottle is internally blocked or plugged. Check for blockage and repair as necessary.

DIAGNOSIS AND TESTING (Continued)

CONDITION	POSSIBLE CAUSE	CORRECTION
RADIATOR FAN OPERATES ALL THE TIME	1. Malfunctioning electrical component or circuit.	1. Refer to appropriate Powertrain Diagnostic Procedures. Repair as necessary.
	2. Check for low coolant level.	2. Repair as necessary.
RADIATOR FAN WILL NOT OPERATE, GAUGE READING HIGH OR HOT	1. Fan motor defective.	1. Refer to appropriate Powertrain Diagnostic Procedures manual for operation of the DRB scan tool. Repair as necessary.
	2. Fan relay, powertrain control module (PCM) or engine coolant temperature sensor defective.	2. Refer to appropriate Powertrain Diagnostic Procedures manual for operation of the DRB scan tool. Repair as necessary.
	3. Blown fuse in power distribution center (PDC).	3. Determine cause for blown fuse and repair as necessary.
NOISY FAN	1. Fan blade loose.	1. Replace radiator fan assembly. Refer to procedure in this section.
	2. Fan blade striking a surrounding object.	2. Locate point of fan blade contact and repair as necessary.
	3. Air obstructions at radiator or A/C condenser.	3. Remove obstructions and/or clean debris from radiator and/or A/C condenser.
	4. Electric fan motor defective.	4. Replace radiator fan assembly. Refer to procedure in this section.
INADEQUATE AIR CONDITIONER PERFORMANCE (COOLING SYSTEM SUSPECTED)	1. Electric radiator fan not operating when A/C is on.	1. Refer to appropriate Powertrain Diagnostic Procedures manual for operation of the DRB scan tool. Repair as necessary.
	2. Radiator and/or air conditioning condenser is restricted, obstructed or dirty.	2. Remove restriction and/or clean as necessary.
	3. Air seals missing or improperly installed.	3. Inspect air seals. Repair as necessary.
	4. Engine is overheating (heat may be transferred from radiator to A/C condenser). High underhood temperature due to engine overheating may also transfer heat to A/C components.	4. Correct overheating condition. Refer to this section.

DIAGNOSIS AND TESTING (Continued)

CONDITION	POSSIBLE CAUSE	CORRECTION
INADEQUATE HEATER PERFORMANCE	1. Has a diagnostic trouble code (DTC) been set?	1. Refer to Powertrain Diagnostic Procedures.
	2. Coolant level low.	2. Refer to testing cooling system for leaks in this section. Repair as necessary.
	3. Obstructions in heater hose fittings at engine.	3. Remove heater hoses at both ends and check for obstructions. Repair as necessary.
	4. Heater hose kinked.	4. Locate kinked area and repair as necessary.
	5. Water pump is not pumping coolant to heater core. When the engine is fully warmed up, both heater hoses should be hot to the touch. The water pump drive belt or impeller may be slipping.	5. Refer to water pump in this section. Repair as necessary.
HEAT ODOR	1. Various heat shields are used at certain components. One or more of these shields may be missing.	1. Locate missing shields and replace or repair as necessary.
	2. Is temperature gauge reading above the normal range?	2. Refer to the previous Temperature Gauge Reads High in these Diagnostic Charts. Repair as necessary.
	3. Is cooling fan operating correctly?	3. Refer to Radiator Fan in this section for diagnosis. Repair as necessary.
	4. Has undercoating been applied to any unnecessary component.	4. Clean undercoating as necessary.
	5. Engine may be running rich causing the catalytic converter to overheat.	5. Refer to appropriate Powertrain Diagnostic Procedures manual for operation of the DRB scan tool. Repair as necessary.

DIAGNOSIS AND TESTING (Continued)

CONDITION	POSSIBLE CAUSE	CORRECTION
POOR DRIVEABILITY (THERMOSTAT POSSIBLY STUCK OPEN). GAUGE MAY BE READING LOW	1. Has a diagnostic trouble code (DTC) been set?	1. Refer to the Powertrain Diagnostic Procedure manual for checking a DTC related to the thermostat.
STEAM IS COMING FROM FRONT OF VEHICLE NEAR GRILL AREA WHEN WEATHER IS WET, ENGINE IS WARMED UP, RUNNING, AND VEHICLE IS STATIONARY. TEMPERATURE GAUGE IS IN NORMAL RANGE.	1. During wet weather, moisture (snow, ice or rain condensation) on the radiator will evaporate when the thermostat opens. This opening allows heated water into the radiator. When the moisture contact the hot radiator, steam may be emitted. This usually occurs in cold weather with no fan or airflow to blow it away.	1. Occasional steam emitting from this area is normal. No repair is necessary.
COOLANT COLOR	1. Coolant color is not necessarily an indication of adequate corrosion or temperature protection. Do not rely on coolant color for determining condition of coolant.	1. Check the freeze point of the coolant. Refer to Coolant Concentration Testing in this section for procedure. Adjust the glycol-to-water ratio as required.
COOLANT LEVEL CHANGES IN COOLANT RECOVERY/RESERVE BOTTLE	1. Level changes are to be expected as coolant volume fluctuates with engine temperature. If the level in the bottle was between the FULL HOT and ADD marks at normal engine operating temperature, the level should return to within that range after operation at elevated temperatures.	1. A normal condition. No repair is necessary.

THERMOSTAT

The thermostat is operated by a wax filled chamber (pellet) which is sealed. When heated coolant reaches a predetermined temperature the wax pellet expands enough to overcome the closing spring and water pump pressure, which forces the valve to open. Coolant leakage into the pellet will cause a thermostat to fail open. Do not attempt to free up a thermostat with a screwdriver.

Thermostat diagnostics is included in powertrain control module's (PCM) programing for on-board diagnosis. The malfunction indicator light (MIL) will illuminate and a diagnostic trouble code (DTC) will be set when an “open too soon” condition occurs. Do not change a thermostat for lack of heater performance or temperature gauge position, unless a DTC is present. Refer to Diagnosis for other probable causes. Thermostat failing shut is the normal long term mode of failure, and normally, only on high mileage vehicles. The temperature gauge will indicate this. Refer to Cooling System Diagnosis in this section.

DIAGNOSIS AND TESTING (Continued)

ACCESSORY DRIVE BELTS

CONDITION	POSSIBLE CAUSE	CORRECTION
BELT SLIPPAGE	1. Belt slipping because of insufficient tension.	1. Retension generator belt. Replace the power steering belt's automatic belt tensioner.
	2. Belt excessively glazed or hardened from heat and excessive slippage.	2. Replace belt.
	3. Incorrect belt.	3. Replace belt.
	4. Driven component bearing failure.	4. Replace faulty component.
	5. Belt or pulley subjected to substance (belt dressing, oil, ethylene glycol) that has reduced friction.	5. Replace belt and clean pulleys.
BELT NOISE (OBJECTIONABLE SQUEAL, SQUEAK, OR RUMBLE)	1. Belt slippage.	1. Retension generator belt, replace belt, or automatic belt tensioner.
	2. Foreign material imbedded in belt.	2. Replace belt.
	3. Non-uniform belt.	3. Replace belt.
	4. Misaligned pulley(s).	4. Align accessories.
	5. Non-uniform groove or eccentric pulley.	5. Replace pulley(s).
	6. Bearing noise.	6. Locate and repair.
BELT ROLLED OVER IN GROOVE OR BELT JUMPS OFF	1. Broken cord in belt.	1. Replace belt.
	2. Belt tension too loose, or too tight.	2. Retension generator belt. Replace the power steering belt's automatic belt tensioner.
	3. Misaligned pulleys.	3. Align accessories.
	4. Non-uniform grooves or eccentric pulley.	4. Replace pulley(s).
	5. Foreign object(s) in grooves.	5. Remove foreign objects in groove.

WATER PUMP

A quick flow test to determine if the water pump is working effectively is to check heater system for proper operation. A defective pump will not provide an adequate flow of heated coolant through the system.

WARNING: DO NOT REMOVE THE COOLING SYSTEM PRESSURE CAP WITH THE SYSTEM HOT AND UNDER PRESSURE BECAUSE SERIOUS BURNS FROM COOLANT CAN OCCUR.

Another flow test to help determine water pump operation is as follows:

(1) Remove cooling system pressure cap.

(2) Remove a small amount of coolant from the system.

(3) Start the engine and warm up until thermostat opens.

(4) With the thermostat open and coolant level low, visually inspect for coolant flow. If flow is present, the water pump is pumping coolant through the system.

DIAGNOSIS AND TESTING (Continued)

COOLING SYSTEM FLOW CHECK

To determine if coolant is properly flowing through the cooling system, use the following procedures:

WARNING: DO NOT REMOVE THE COOLING SYSTEM PRESSURE CAP WITH THE SYSTEM HOT AND UNDER PRESSURE BECAUSE SERIOUS BURNS FROM COOLANT CAN OCCUR.

(1) With engine cold, remove the pressure cap.
(2) Remove a small amount of coolant.
(3) Start and idle engine until thermostat opens.
(4) Visually inspect filler neck opening, observing for coolant flow.
(5) If flow is detected, the coolant is circulating.
(6) Install the pressure cap.
(7) Adjust coolant level as necessary.

RADIATOR FAN MOTOR TEST

Refer to Powertrain Diagnostic Manual for procedure.

COOLANT CONCENTRATION TESTING

Coolant concentration should be checked when any additional coolant was added to system or after a coolant drain, flush and refill. The coolant mixture offers optimum engine cooling and protection against corrosion when mixed to a freeze point of -37°C (-34°F) to -59°C (-50°F). The use of a hydrometer or a refractometer can be used to test coolant concentration.

A hydrometer will test the amount of glycol in a mixture by measuring the specific gravity of the mixture. The higher the concentration of ethylene glycol, the larger the number of balls that will float, and higher the freeze protection (up to a maximum of 70% by volume glycol).

A refractometer (Tool 8286) will test the amount of glycol in a coolant mixture by measuring the amount a beam of light bends as it passes through the fluid. Testing coolant concentration using a refractometer is recommended.

Some coolant manufactures use other types of glycols into their coolant formulations. Propylene glycol is the most common new coolant. However, propylene glycol based coolants do not provide the same freezing protection and corrosion protection and is not recommended.

CAUTION: Do not mix types of coolant—corrosion protection will be severely reduced.

COOLING SYSTEM—LEAK TESTING

WARNING: IF VEHICLE HAS BEEN RUN RECENTLY, WAIT 15 MINUTES BEFORE REMOVING PRESSURE CAP. PLACE A SHOP TOWEL OVER THE CAP, AND WITHOUT PUSHING DOWN, ROTATE IT COUNTER-CLOCKWISE TO THE FIRST STOP. ALLOW FLUIDS TO ESCAPE THROUGH THE OVERFLOW TUBE. WHEN THE SYSTEM STOPS PUSHING COOLANT AND STEAM INTO THE COOLANT RECOVERY BOTTLE AND PRESSURE DROPS, PUSH DOWN ON THE CAP AND REMOVE IT COMPLETELY. SQUEEZING THE RADIATOR INLET HOSE WITH A SHOP TOWEL (TO CHECK PRESSURE) BEFORE AND AFTER TURNING TO THE FIRST STOP IS RECOMMENDED.

The cooling system should be full. Add coolant if necessary.

With the engine not running, wipe the filler neck sealing seat clean.

Attach a radiator pressure tester (Tool 7700 or equivilent) to the filler neck, as shown in (Fig. 15) and apply 104 Kpa (15 psi) pressure. If the pressure drops more than 13.8 Kpa (2 psi) in 2 minutes, inspect the system for external leaks.

Move all hoses at the radiator and heater while system is pressurize at 104 Kpa (15 psi), since some leaks occur due to engine movement while driving.

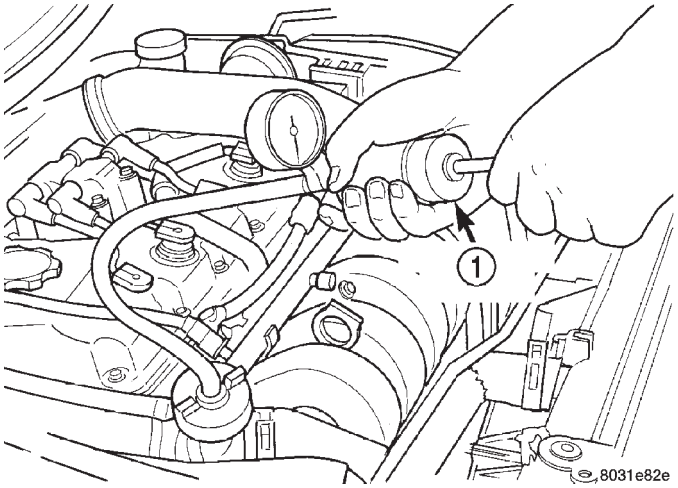

Fig. 15 Pressure Testing Cooling System—Typical
1 – PRESSURE TESTER

If there are no external leaks after the gauge dial shows a drop in pressure, detach the tester. Start the engine, and run the engine to normal operating temperature in order to open the thermostat and allow the coolant to expand. Reattach the tester. If the needle on the dial fluctuates it indicates a combustion leak, usually a head gasket leak.

WARNING: WITH THE PRESSURE TESTER IN PLACE PRESSURE BUILDS UP QUICKLY. ANY EXCESSIVE PRESSURE BUILD-UP DUE TO CONTINUOUS ENGINE OPERATION MUST BE RELEASED TO A SAFE PRESSURE POINT. NEVER PERMIT PRESSURE TO EXCEED 138 kPa (20 psi).

DIAGNOSIS AND TESTING (Continued)

If the needle on the dial does not fluctuate, race the engine a few times. If an abnormal amount of coolant or steam is emitted from the tail pipe, it may indicate a faulty head gasket, cracked engine block, or cracked cylinder head.

There may be internal leaks, which can be determined by removing the engine oil dipstick. If water globules appear intermixed with the oil, it indicates an internal leak in the engine. If there is an internal leak, the engine must be disassembled for repair.

PRESSURE CAP TO FILLER NECK SEAL PRESSURE RELIEF CHECK

The pressure cap upper gasket (seal) (Fig. 16) pressure relief can be checked by removing the recovery hose at the filler neck/coolant outlet connector nipple (Fig. 17). Attach the radiator pressure tester hose to the **filler neck nipple,** and pump air into the system. The pressure cap upper gasket should relieve pressure at 69-124 Kpa (10-18 psi), and hold pressure at 55 Kpa (8 psi) minimum.

WARNING: THE WARNING WORDS DO NOT OPEN HOT ON THE PRESSURE CAP IS A SAFETY PRECAUTION. WHEN HOT, THE COOLING SYSTEM BUILDS UP PRESSURE. TO PREVENT SCALDING OR OTHER INJURY, THE PRESSURE CAP SHOULD NOT BE REMOVED WHILE THE SYSTEM IS HOT AND/OR UNDER PRESSURE.

There is no need to remove the pressure cap at any time **except** for the following purposes:

- Check and adjust coolant freeze point
- Refill system with new coolant
- Conducting service procedures
- Checking for leaks

WARNING: IF VEHICLE HAS BEEN RUN RECENTLY, WAIT 15 MINUTES BEFORE REMOVING CAP. PLACE A SHOP TOWEL OVER THE CAP, AND WITHOUT PUSHING DOWN, ROTATE IT COUNTERCLOCKWISE TO THE FIRST STOP. ALLOW FLUIDS TO ESCAPE THROUGH THE RECOVERY HOSE. WHEN THE SYSTEM STOPS PUSHING COOLANT AND STEAM INTO THE COOLANT RECOVERY BOTTLE AND PRESSURE DROPS, PUSH DOWN ON THE CAP AND REMOVE IT COMPLETELY. SQUEEZING THE RADIATOR UPPER HOSE WITH A SHOP TOWEL (TO CHECK PRESSURE) BEFORE AND AFTER TURNING TO THE FIRST STOP IS RECOMMENDED.

COOLING SYSTEM PRESSURE CAP

Dip the pressure cap in water; clean off any deposits on the vent valve or its seat, and apply the cap to end of radiator pressure tester (Fig. 18). Working the plunger, increase the pressure to 104 kPa (15 psi) on the gauge. If the pressure cap fails to hold pressure of at least 97 kPa (14 psi), replace the cap.

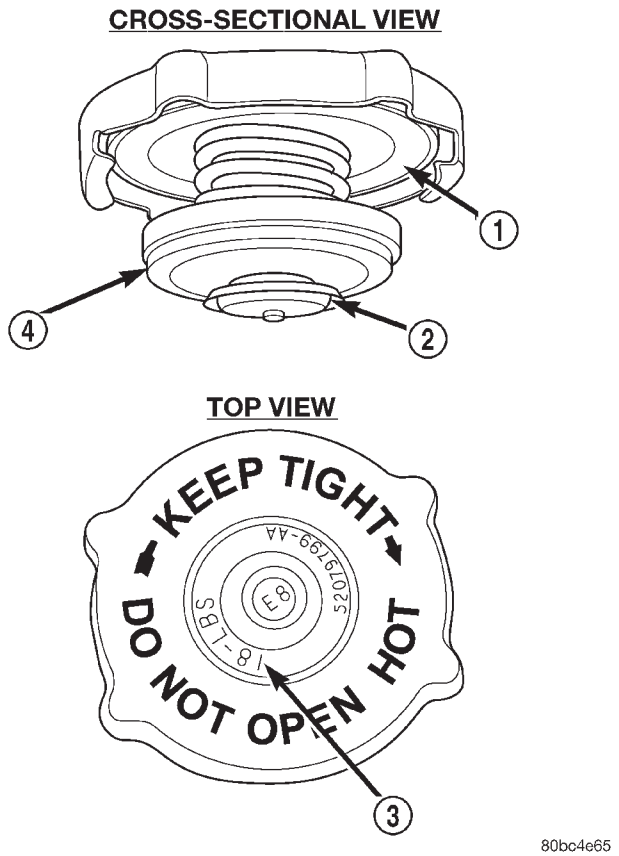

Fig. 16 Cooling System Pressure Cap

1 – FILLER NECK SEAL
2 – VACUUM VENT VALVE
3 – PRESSURE RATING
4 – PRESSURE VALVE

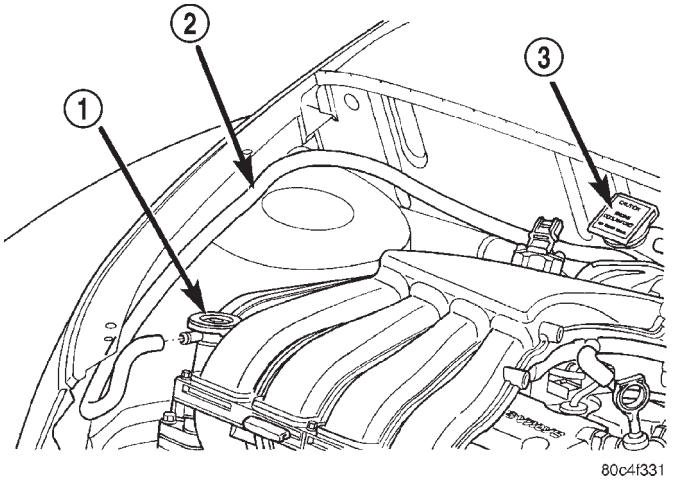

Fig. 17 Recovery Hose

1 – PRESSURE CAP
2 – HOSE
3 – COOLANT RECOVERY BOTTLE

DIAGNOSIS AND TESTING (Continued)

CAUTION: The radiator pressure tester is very sensitive to small air leaks that will not cause cooling system problems. A pressure cap that does not have a history of coolant loss should not be replaced just because it leaks slowly when tested with this tool. Add water to the tool. Turn the tool upside down, and recheck the pressure cap to confirm that the cap is faulty.

If the pressure cap tests properly while positioned the on radiator pressure tester, but will not hold pressure or vacuum when positioned on the filler neck, inspect the filler neck and cap top gasket for irregularities that may prevent the cap from sealing properly.

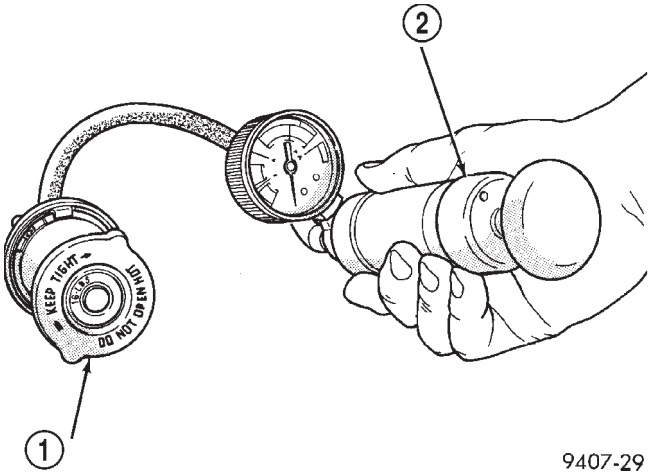

Fig. 18 Pressure Testing Radiator Cap

1 – PRESSURE CAP
2 – PRESSURE TESTER

COOLING SYSTEM AERATION

Low coolant level in the cooling system will cause aeration, resulting in the following conditions:

- Corrosion in the system
- High reading shown on the temperature gauge
- Loss of coolant flow through the heater
- Exhaust gas leaks into the coolant can also cause the above problems

COOLING SYSTEM DEAERATION

Air can only be removed from the system by gathering under the pressure cap. On the next heat up it will be pushed past the pressure cap into the coolant recovery bottle by thermal expansion of the coolant. It then escapes to the atmosphere in the coolant recovery bottle and is replaced with coolant on cool down.

To effectively deaerate the system, multiple thermal cycles of the system may be required.

ENGINE BLOCK HEATER

If heater unit does not operate (Fig. 19), possible causes can be either the power cord or the heater element. Test the power cord for continuity with a 110-volt voltmeter or 110-volt test light. Test heater element continuity with an ohmmeter or a 12-volt test light.

CAUTION: To prevent damage, the power cord (Fig. 20) must be secured in its retainer clips and away from any components that may cause abrasion or damage, such as linkages, exhaust components, etc.

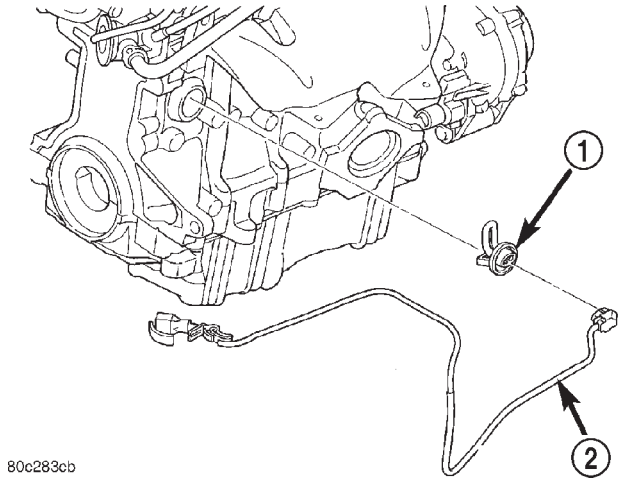

Fig. 19 Engine Block Heater

1 – BLOCK HEATER
2 – POWER CORD

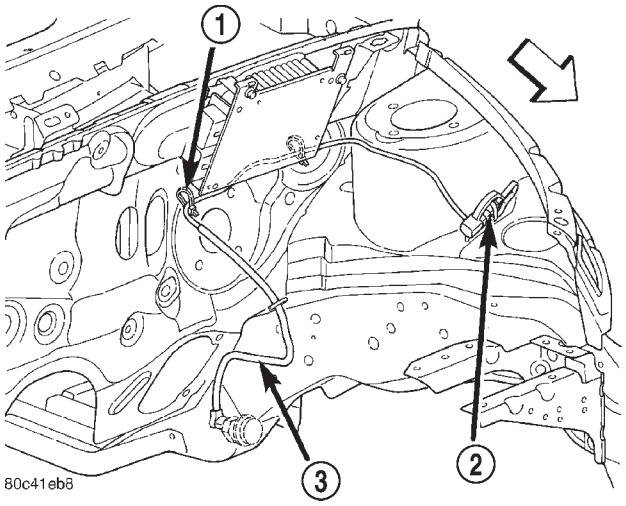

Fig. 20 Power Cord

1 – STRAP
2 – CONNECTOR
3 – POWER CORD

SERVICE PROCEDURES

COOLANT CONCENTRATION TESTING

Coolant concentration should be checked when any additional coolant was added to system or after a coolant drain, flush and refill. The coolant mixture offers optimum engine cooling and protection against corrosion when mixed to a freeze point of -37°C (-34°F) to -59°C (-50°F). The use of a hydrometer or a refractometer can be used to test coolant concentration.

A hydrometer will test the amount of glycol in a mixture by measuring the specific gravity of the mixture. The higher the concentration of ethylene glycol, the larger the number of balls that will float, and higher the freeze protection (up to a maximum of 70% by volume glycol).

A refractometer (Tool 8286) will test the amount of glycol in a coolant mixture by measuring the amount a beam of light bends as it passes through the fluid. Testing coolant concentration using a refractometer is recommended.

Some coolant manufactures use other types of glycols into their coolant formulations. Propylene glycol is the most common new coolant. However, propylene glycol based coolants do not provide the same freezing protection and corrosion protection and is not recommended.

CAUTION: Do not mix types of coolant—corrosion protection will be severely reduced.

COOLANT LEVEL CHECK—ROUTINE

NOTE: Do not remove pressure cap for routine coolant level inspections.

The coolant recovery/reserve system provides a quick visual method for determining the coolant level without removing the pressure cap. Simply observe, with the engine idling and warmed up to normal operating temperature, that the level of the coolant in the recovery/reserve bottle (Fig. 21) is between the FULL HOT and ADD marks.

COOLANT—ADDING ADDITIONAL

NOTE: The radiator cap should not be removed.

When additional coolant is needed, it should be added to the coolant recovery/reserve bottle (Fig. 22). Use only the recommended 50/50 mixture of ethylene glycol type antifreeze and water. Refer to COOLANT in this section.

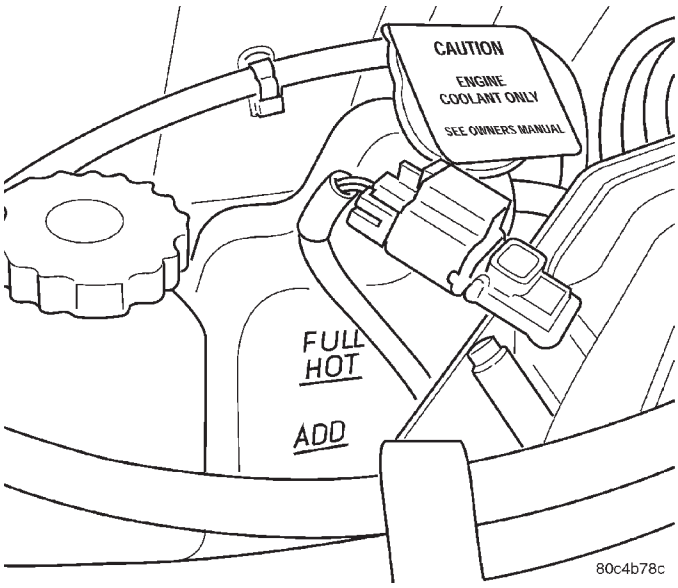

Fig. 21 Coolant Level

CAUTION: COOLANT MAY LEAK OUT OF THE BOTTLE OVERFLOW TUBE WHILE FILLING RAPIDLY.

COOLANT LEVEL—SERVICING

NOTE: The cooling system is closed and designed to maintain coolant level to the top of the radiator.

When servicing requires a coolant level check in the radiator, the engine must be **off** and **not** under pressure. Drain several ounces of coolant from the radiator drain cock while observing the coolant recovery bottle. Coolant level in the container should drop slightly. Remove the pressure cap (Fig. 22). The radiator should be full to the top. If not, and the coolant level in the recovery bottle is at the ADD mark, there is a air leak in the coolant recovery system. Check hose or hose connections to the recovery bottle, outlet connector neck or the pressure cap seal at outlet connector for leaks.

COOLING SYSTEM—DRAINING

NOTE: Drain, flush, and fill the cooling system at the mileage or time intervals specified in LUBRICATION AND MAINTENANCE. If the solution is dirty, rusty, or contains a considerable amount of sediment; clean and flush with a reliable cooling system cleaner. Care should be taken in disposing of the used engine coolant from your vehicle. Check governmental regulations for disposal of used engine coolant.

(1) Position a clean collecting container under draincock location.

SERVICE PROCEDURES (Continued)

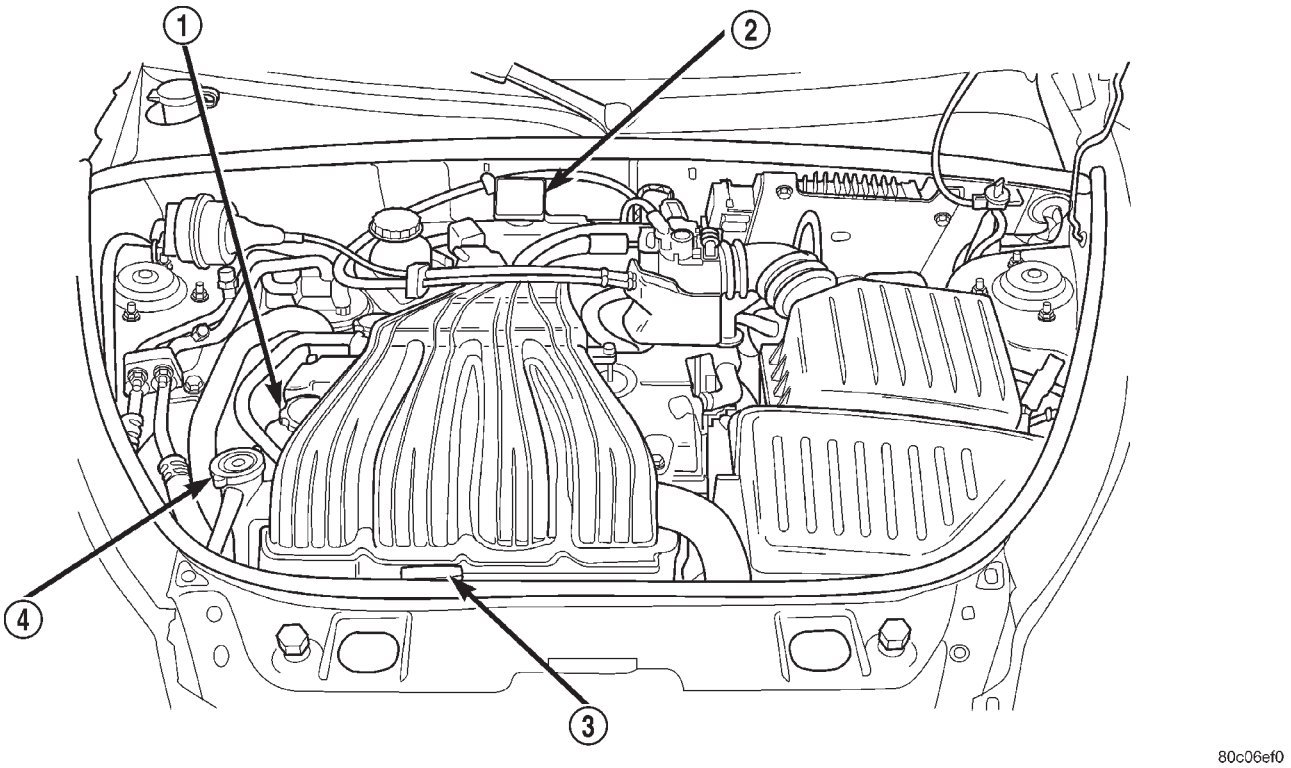

Fig. 22 Coolant Recovery Bottle and Pressure Cap

1 – ENGINE OIL FILL
2 – COOLANT RECOVERY BOTTLE
3 – ENGINE OIL DIPSTICK
4 – COOLANT PRESSURE CAP

(2) Without removing the pressure cap and with system not under pressure, turn draincock counterclockwise to open (Fig. 23).

(3) The coolant reserve bottle should empty first, then remove the pressure cap. If bottle does not empty first, refer to Testing Cooling System for leaks.

(4) Allow cooling system to drain completely.

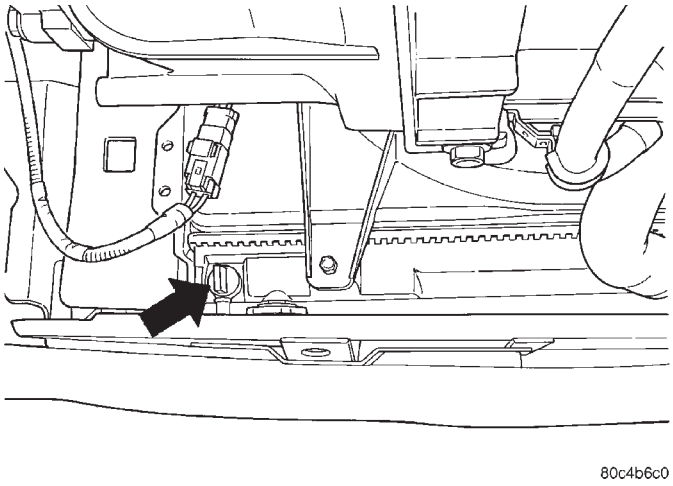

Fig. 23 Cooling System Draincock Location

COOLING SYSTEM—FILLING

WARNING: MAKE SURE ENGINE COOLING SYSTEM IS COOL BEFORE REMOVING PRESSURE CAP OR ANY HOSE. THE COOLING SYSTEM IS PRESSURIZED WHEN HOT. SEVERE PERSONAL INJURY MAY RESULT FROM ESCAPING HOT COOLANT.

CAUTION: Do not use well water, or suspect water supply in cooling system. A 50/50 mixture of the recommended ethylene glycol and distilled water is recommended. Refer to COOLANT in this section.

(1) Close radiator draincock. Hand tighten only.

(2) Open cooling system bleed valve (Fig. 24).

(3) Attach a 6.35 mm (0.250 in.) inside diameter clear hose that is 120.0 cm (48 in.) long to the bleed valve. Route the hose away from the accessory drive and radiator fan. Position the other end of the hose into a collecting container. The hose will prevent coolant from contacting the accessory drive belts, A/C compressor, and other components.

(4) Remove the cooling system pressure cap and fill the cooling system with the recommended coolant. For recommended coolant usage, refer to COOLANT in this section.

SERVICE PROCEDURES (Continued)

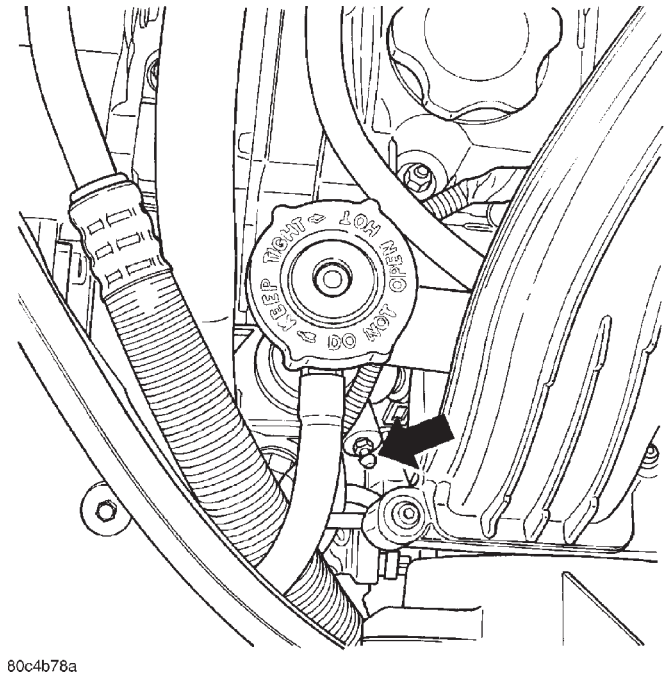

Fig. 24 Cooling System Bleed Valve

NOTE: Be careful not to spill coolant on drive belts or the generator.

(5) Slowly continue filling until a steady stream of coolant flows from the attached hose on the bleed valve.

(6) Close the bleed valve and remove the hose.

(7) Fill coolant to the top of the pressure cap neck.

(8) Install cooling system pressure cap.

CAUTION: Coolant may leak out of the bottle overflow tube if filling to rapidly.

(9) Slowly fill coolant reserve/recovery bottle to at least the FULL HOT mark with the recommended coolant. It may be necessary to add additional coolant to the reserve/recovery bottle after three or four warm-up/cool down cycles to maintain coolant level between the FULL HOT and ADD marks; if any additional trapped air was removed from the system.

REMOVAL AND INSTALLATION

WATER PUMP

REMOVAL

(1) Drain cooling system. Refer to Cooling System Draining.

(2) Remove timing belt. Refer to ENGINE for procedures.

(3) Remove camshaft sprockets and rear timing belt cover. Refer to ENGINE for procedures.

(4) Remove water pump attaching screws to engine and remove pump (Fig. 25).

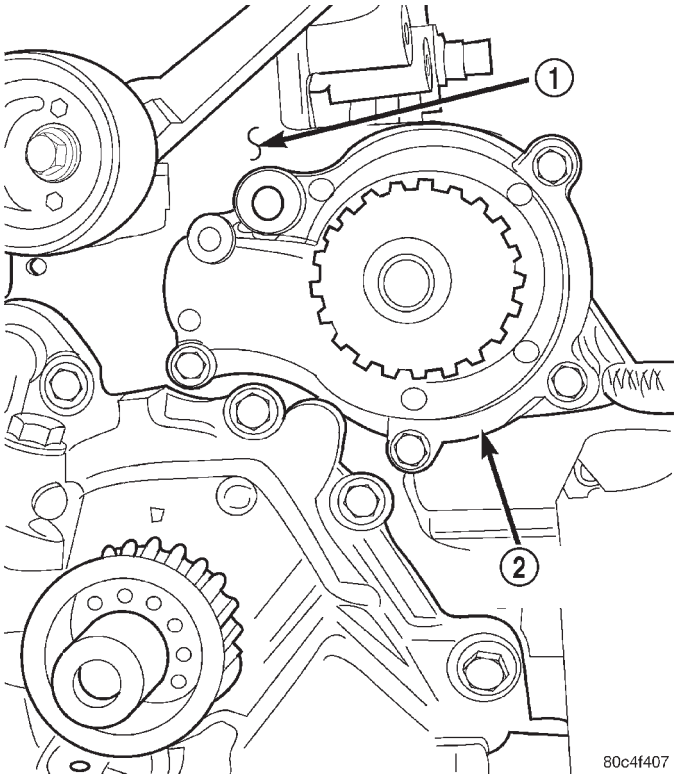

Fig. 25 Water Pump

1 – CYLINDER BLOCK
2 – WATER PUMP

INSTALLATION

(1) Apply Mopar® Dielectric Grease to new O-ring before installation (Fig. 26).

(2) Install O-ring gasket in water pump body groove (Fig. 26).

CAUTION: Make sure O-ring gasket is properly seated in water pump groove before tightening screws. An improperly located O-ring may cause damage to the O-ring, resulting in a coolant leak.

(3) Assemble pump body to block (Fig. 25) and tighten screws to 12 N·m (105 in. lbs.).

(4) Rotate pump by hand to check for freedom of movement.

(5) Fill cooling system. Refer to Cooling System Filling. Pressurize cooling system to 103 Kpa (15 psi) with pressure tester and check water pump shaft seal and O-ring for leaks.

(6) Install rear timing belt cover and camshaft sprockets.

(7) Install timing belt. Refer to ENGINE for procedure.

REMOVAL AND INSTALLATION (Continued)

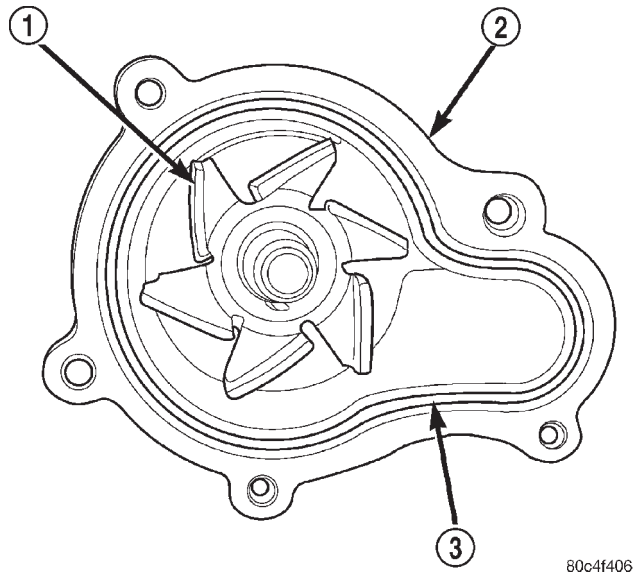

Fig. 26 Water Pump Body

1 – IMPELLER
2 – WATER PUMP BODY
3 – O-RING

WATER PUMP INLET TUBE

The inlet tube connects the water pump to the radiator and heater core. This tube is sealed by an O-ring and held in place by fasteners to the block.

REMOVAL

CAUTION: Do not use any sharp tools to remove hoses from inlet tube. This may cause the tube to leak.

(1) Drain cooling system. Refer to procedure in this section.

(2) Remove upper radiator support crossmember. Refer to BODY for procedure.

(3) Remove lower radiator hose and heater return hose from the inlet tube (Fig. 27).

(4) Remove the inlet tube to block bolts (Fig. 27).

(5) Rotate tube while removing from the engine block (Fig. 28).

INSTALLATION

(1) Inspect the O-ring for damage before installing the tube (Fig. 28). Replace O-ring as necessary.

(2) Lubricate O-ring with Mopar® Dielectric Grease and install inlet tube into the cylinder block opening (Fig. 28).

(3) Install inlet tube bolts and tighten to 12 N·m (105 in. lbs.) (Fig. 27).

(4) Connect lower radiator hose and heater return hose to inlet tube (Fig. 27).

(5) Install upper radiator support crossmember. Refer to BODY for procedure.

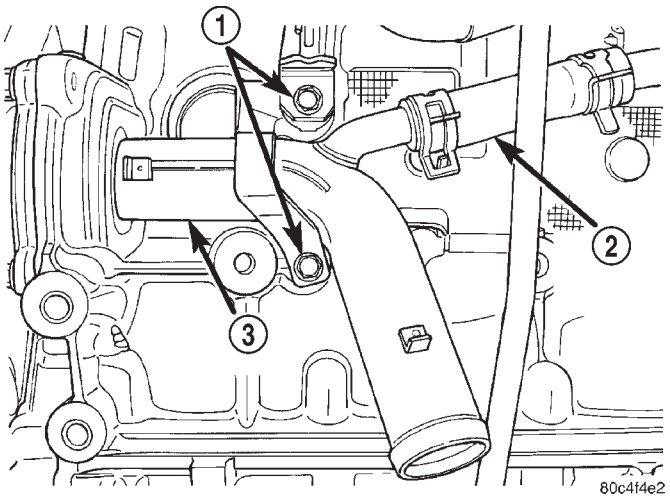

Fig. 27 Water Pump Inlet Tube Fasteners

1 – BOLTS
2 – HOSE - HEATER RETURN
3 – WATER PUMP INLET TUBE

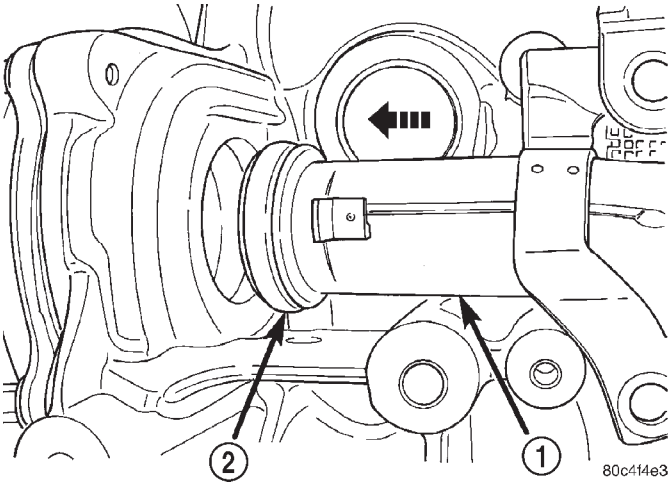

Fig. 28 Water Pump Inlet Tube—Installation

1 – TUBE
2 – O-RING

(6) Fill cooling system. Refer to procedure in this section.

(7) Pressure test system to 103 kPa (15 psi) and check for leaks.

THERMOSTAT

REMOVAL

(1) Remove upper intake manifold. Refer to ENGINE for procedure.

(2) Drain cooling system below the thermostat level. Refer to Cooling System Draining in this section.

(3) Remove upper radiator hose from outlet connector.

REMOVAL AND INSTALLATION (Continued)

(4) Remove coolant recovery system hose from outlet connector.

(5) Remove thermostat/coolant outlet connector bolts (Fig. 29).

(6) Remove thermostat assembly, and clean sealing surfaces.

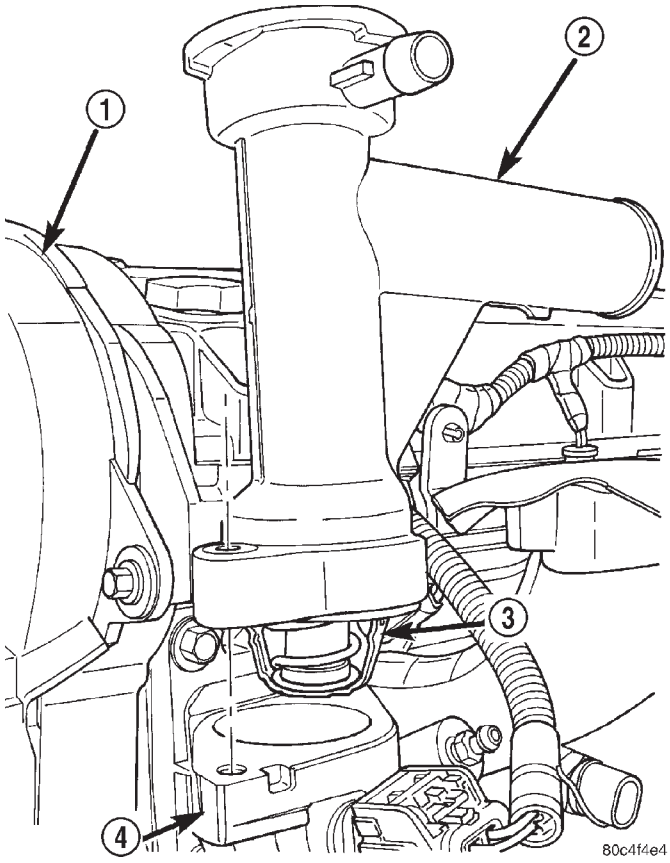

Fig. 29 Thermostat and Coolant Outlet Connector

1 – TIMING BELT COVER
2 – OUTLET CONNECTOR
3 – THERMOSTAT
4 – HOUSING

INSTALLATION

(1) Place the new thermostat assembly into the coolant outlet connector, aligning air bleed with the location notch on outlet connector (Fig. 30).

(2) Install coolant outlet connector with thermostat in position onto thermostat housing (Fig. 29). Tighten bolts to 12.5 N·m (110 in. lbs.).

(3) Install upper radiator hose.

(4) Connect the coolant recovery system hose.

(5) Install upper intake manifold. Refer to ENGINE for procedure.

(6) Fill cooling system. Refer to Cooling System—Filling in this section.

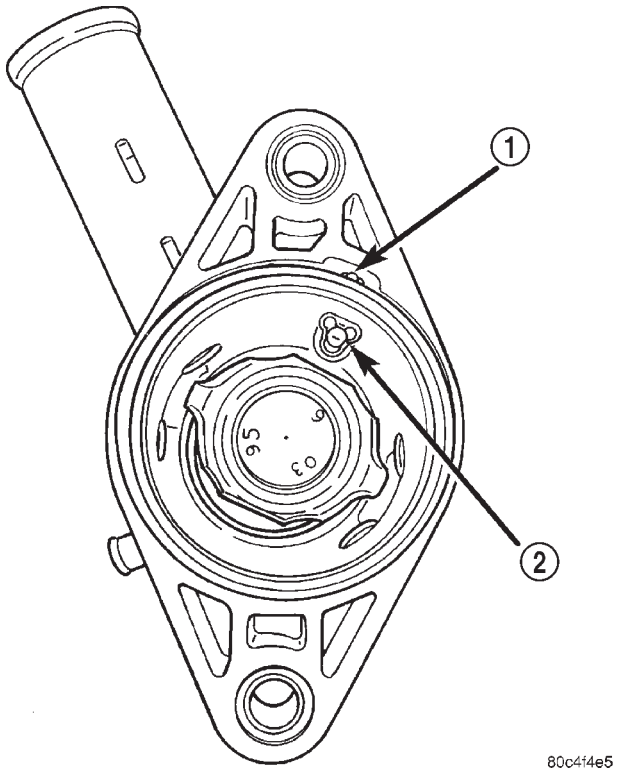

Fig. 30 Thermostat Position

1 – LOCATOR NOTCH
2 – AIR BLEED

THERMOSTAT HOUSING

REMOVAL

(1) Drain cooling system below thermostat housing level.

(2) Remove thermostat. Refer to procedure in this section.

(3) Disconnect engine coolant temperature sensor.

(4) Disconnect heater supply hose.

(5) Remove housing attaching bolts (Fig. 31).

(6) Remove housing and gasket (Fig. 31).

INSTALLATION

(1) Clean all gasket sealing surfaces.

(2) Install gasket and housing (Fig. 31). Tighten bolts to 28 N·m (20 ft. lbs.).

(3) Connect engine coolant temperature sensor.

(4) Install thermostat. Refer to procedure in this section.

(5) Fill cooling system. Refer to procedure in this section.

REMOVAL AND INSTALLATION (Continued)

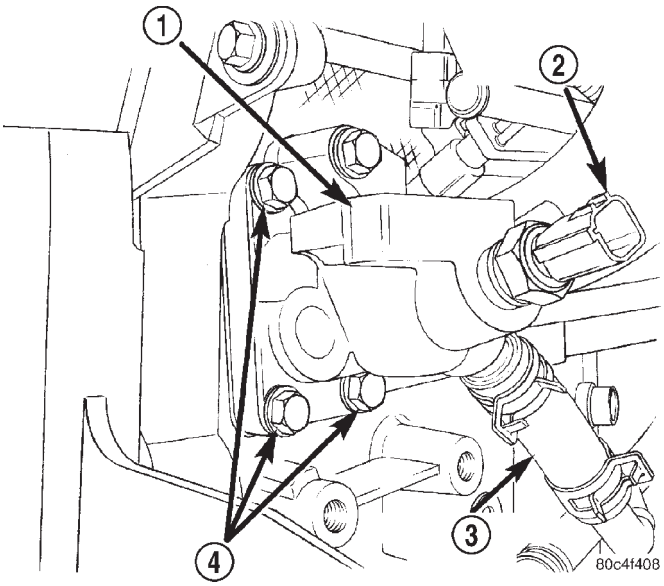

Fig. 31 Thermostat Housing

1 – THERMOSTAT HOUSING
2 – COOLANT TEMPERATURE SENSOR
3 – HOSE-HEATER SUPPLY
4 – BOLTS

RADIATOR

REMOVAL

WARNING: DO NOT OPEN THE RADIATOR DRAIN-COCK WITH THE SYSTEM HOT AND UNDER PRESSURE BECAUSE SERIOUS BURNS FROM COOLANT CAN OCCUR.

(1) Disconnect cables from battery.

(2) Remove battery and battery tray. Refer to BATTERY for procedures.

(3) Drain cooling system. Refer to procedure in this section.

(4) Discharge A/C system. Refer to HEATING AND AIR CONDITIONING for procedure.

(5) Remove grill. Refer to BODY for procedure.

(6) Remove upper radiator support crossmember. Refer to BODY for procedure.

(7) Remove upper radiator hose from the radiator (Fig. 32).

(8) Raise vehicle.

(9) Disconnect and cap the automatic transmission cooler hoses, if equipped (Fig. 32).

(10) Disconnect radiator fan motor electrical connector (Fig. 33).

(11) Remove the lower radiator hose (Fig. 32).

(12) Lower vehicle and remove the A/C lines from condenser. Refer to HEATING AND AIR CONDITIONING for procedure.

(13) Remove the cooling module assembly (radiator, fan and A/C condenser) (Fig. 33) by lifting it up from the engine compartment. **Care should be taken not to damage the cooling fins and tubes during removal.**

(14) Place cooling module assembly on bench.

(15) Remove bolts attaching radiator fan to radiator (Fig. 34).

(16) Remove bolts attaching the A/C condenser and transmission oil cooler (if equipped) to the radiator.

(17) Remove the lower air shield from radiator (Fig. 35).

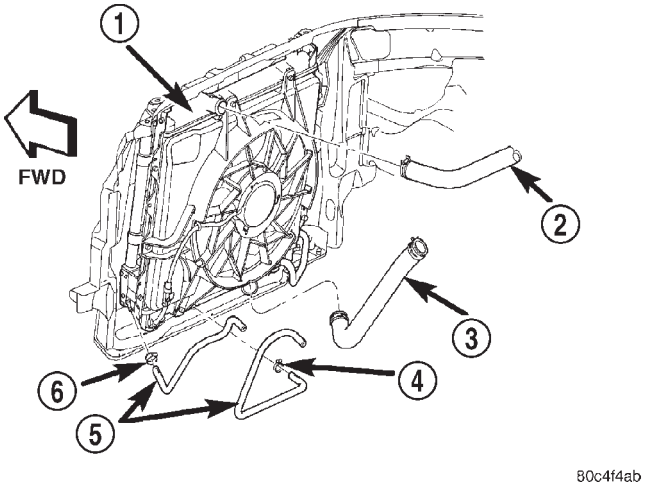

Fig. 32 Radiator Hose Connections

1 – RADIATOR
2 – RADIATOR UPPER HOSE
3 – RADIATOR LOWER HOSE
4 – CLAMP
5 – TRANSMISSION OIL COOLER HOSES
6 – CLAMP

INSTALLATION

(1) Install the lower air shield to radiator (Fig. 35).

(2) Install the A/C condenser and transaxle oil cooler (if equipped) to the radiator. Tighten bolts to 8 N·m (70 in. lbs.).

(3) Connect the lower air shield to the side air shields (Fig. 35).

(4) Install radiator fan to radiator (Fig. 34). Tighten bolts to 6 N·m (55 in. lbs.).

(5) Position cooling module to engine compartment and lower it until the isolators are engaged in the locating holes on the lower radiator support (Fig. 33).

(6) Connect A/C lines to condenser. Refer to HEATING AND AIR CONDITIONING for procedure.

(7) Install lower radiator hose (Fig. 32). Align the hose and position the clamp so it will not interfere with engine components.

(8) Connect transmission oil cooler hoses, if equipped (Fig. 32). Tighten hose clamps to 2 N·m (18 in. lbs.).

REMOVAL AND INSTALLATION (Continued)

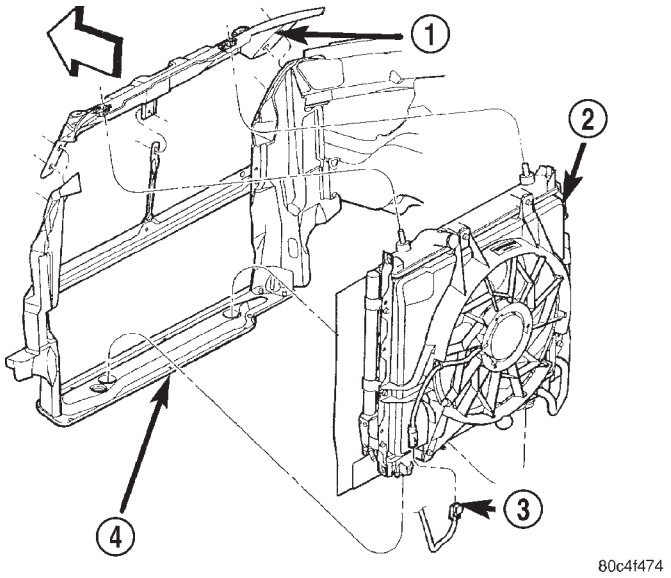

Fig. 33 Cooling Module Assembly

1 – UPPER RADIATOR CROSSMEMBER
2 – COOLING MODULE
3 – RADIATOR FAN CONNECTOR
4 – LOWER RADIATOR CROSSMEMBER

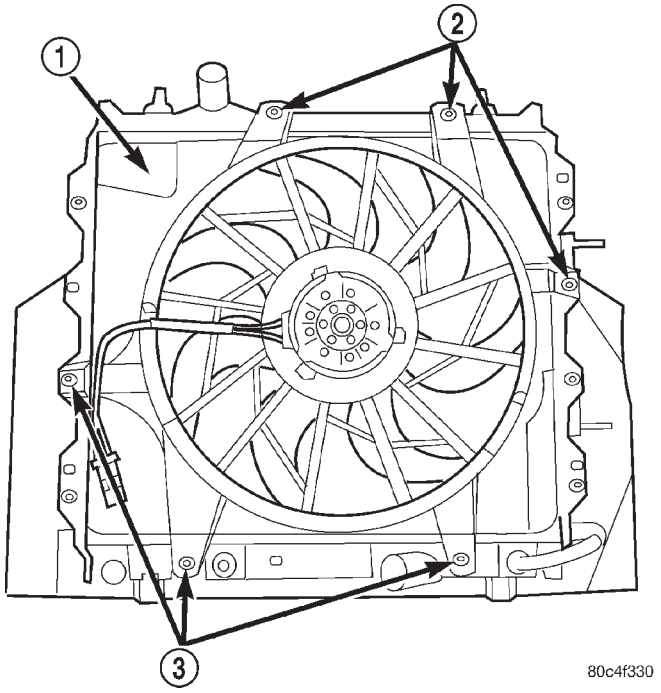

Fig. 34 Radiator Fan

1 – RADIATOR FAN
2 – SCREWS
3 – SCREWS

(9) Connect the radiator fan motor electrical connector (Fig. 33).

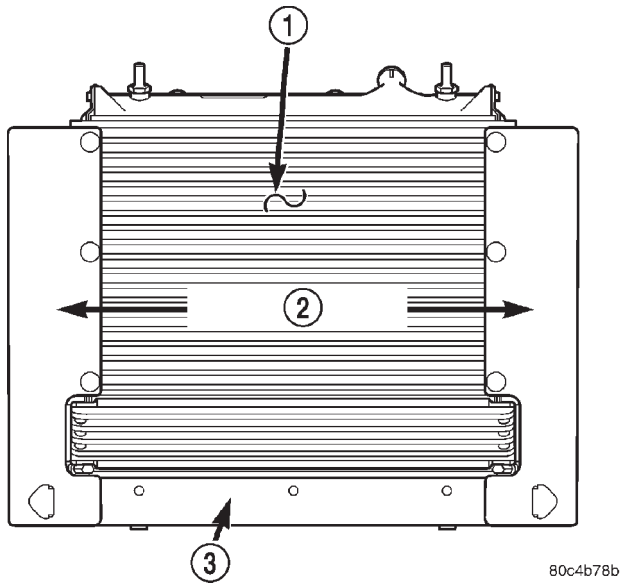

Fig. 35 Air Seals

1 – A/C CONDENSER
2 – SIDE AIR SEALS
3 – LOWER AIR SEAL

(10) Install upper radiator hose (Fig. 32). Align the hose and position the clamp to prevent interference with the engine or hood.

(11) Install upper radiator support crossmember. Refer to BODY for procedure.

(12) Install grill. Refer to BODY for procedure.

(13) Install battery tray and battery. Refer to BATTERY for procedures.

(14) Connect cables to battery.

(15) Evacuate and recharge A/C system. Refer to HEATING AND AIR CONDITIONING for procedure.

(16) Fill cooling system with coolant. Refer to procedure in this section.

(17) Operate engine until it reaches normal operating temperature. Check cooling system and automatic transmission for correct fluid levels.

RADIATOR DRAINCOCK

REMOVAL

CAUTION: Use of pliers on draincock is not recommended. Damage may occur to radiator or draincock.

NOTE: It is not necessary to remove draincock during a routine coolant drain.

(1) Drain cooling system. Refer to procedure in this section.

(2) Open the draincock by turning it counterclockwise until it stops.

REMOVAL AND INSTALLATION (Continued)

(3) Turn the draincock back (clockwise) 1/8 turn.
(4) Pull the draincock (Fig. 36) from the radiator tank.

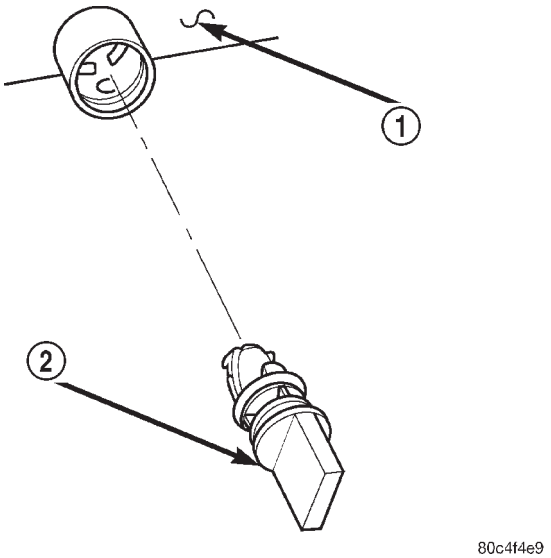

Fig. 36 Draincock

1 – RADIATOR TANK
2 – DRAINCOCK

INSTALLATION

(1) Align draincock stem to radiator tank opening.
(2) Push draincock into the radiator tank opening.
(3) Tighten the draincock by turning clockwise until it stops.
(4) Fill cooling system. Refer to procedure in this section.

RADIATOR FAN

REMOVAL

NOTE: The fan motor, fan, and the shroud are serviced as an assembly.

WARNING: DO NOT OPEN THE RADIATOR DRAINCOCK WITH THE SYSTEM HOT AND UNDER PRESSURE BECAUSE SERIOUS BURNS FROM COOLANT CAN OCCUR.

(1) Disconnect negative cable from battery.
(2) Remove battery and battery tray attaching screws. Move tray rearward for radiator fan clearance.
(3) Drain cooling system below upper radiator hose level. Refer to procedure in this section.
(4) Remove grill. Refer to BODY for procedure.
(5) Remove upper radiator support crossmember. Refer to BODY for procedure.
(6) Remove upper radiator hose from radiator.
(7) Hoist vehicle.
(8) Disconnect radiator fan electrical connector.
(9) Remove the two lower and left side radiator fan screws (Fig. 37).
(10) Lower vehicle and remove the remaining attaching screws.

CAUTION: Care should be taken not to damage the radiator cooling fins and tubes during fan removal.

(11) Remove radiator fan by lifting up from the engine compartment.

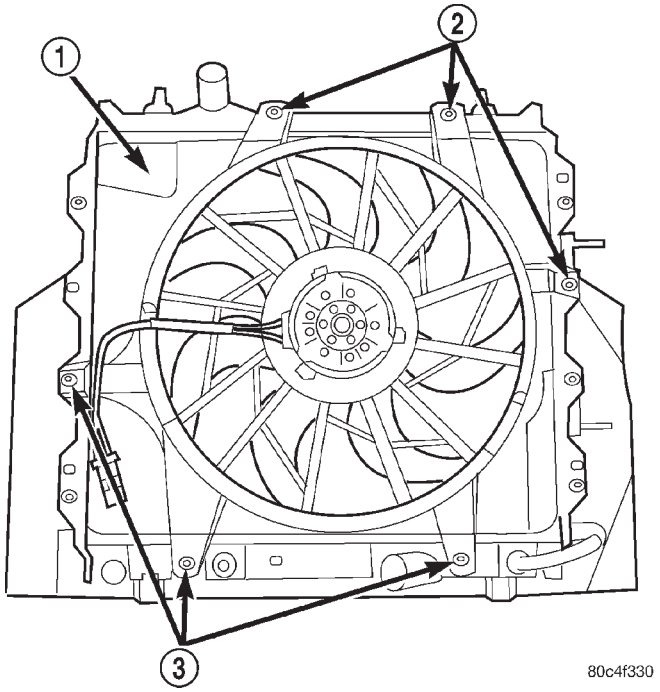

Fig. 37 Radiator Fan—Removal/Installation

1 – RADIATOR FAN
2 – SCREWS
3 – SCREWS

INSTALLATION

(1) Install the radiator fan into position on the radiator.
(2) Install the upper and right side radiator fan retaining screws and tighten to 6 N·m (55 in. lbs.).
(3) Raise vehicle and install the remaining fan attaching screws. Tighten to 6 N·m (55 in. lbs.).
(4) Connect radiator fan electrical connector.
(5) Lower vehicle and install the upper radiator hose to radiator. Align hose and position clamp so it will not interfere with the engine or the hood.
(6) Install upper radiator support crossmember and grill. Refer to BODY for procedures.
(7) Install battery tray and battery.
(8) Connect cables to battery.
(9) Fill cooling system. Refer to procedure in this section.

REMOVAL AND INSTALLATION (Continued)

AUTOMATIC TRANSMISSION OIL COOLER

REMOVAL

(1) Remove front fascia. Refer to BODY for procedure.

(2) Disconnect hoses from oil cooler (Fig. 38).

(3) Remove screws attaching cooler to radiator (Fig. 38).

(4) Remove oil cooler (Fig. 38).

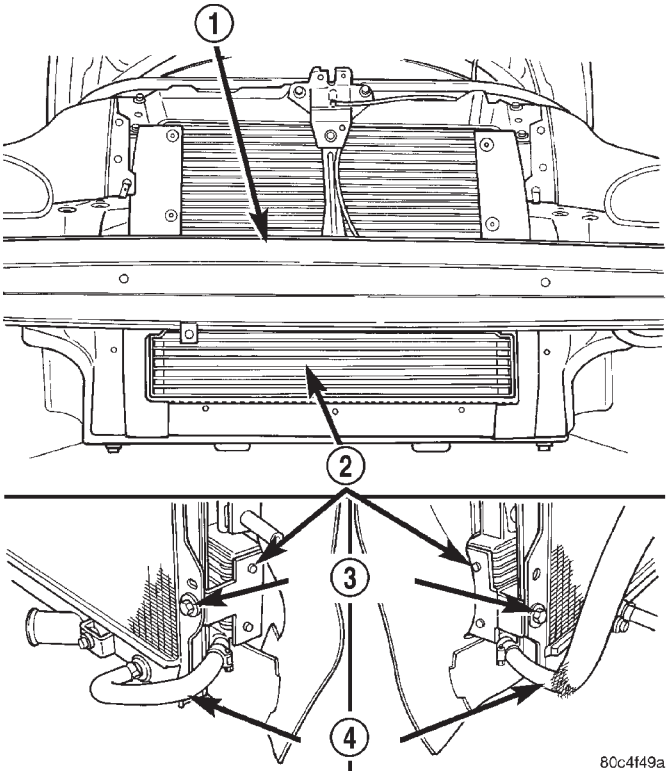

Fig. 38 Automatic Transmission Oil Cooler— Removal/Installation

1 – FRONT BUMPER (FASCIA REMOVED)
2 – TRANSMISSION OIL COOLER
3 – SCREWS
4 – HOSES

INSTALLATION

(1) Install oil cooler and tighten screws to 8 N·m (70 in. lbs.) (Fig. 38).

(2) Connect hoses to cooler (Fig. 38).

(3) Install front fascia. Refer to BODY for procedure.

(4) Start engine and check fluid level. Adjust level as necessary.

COOLANT RECOVERY BOTTLE

REMOVAL

(1) Disconnect recovery hose from coolant outlet connector (Fig. 40).

(2) Disconnect the MAP sensor connector.

(3) Disengage the power steering fluid reservoir from bracket and move aside (Fig. 39).

(4) Remove bottle attaching fasteners (Fig. 41).

(5) Remove coolant recovery bottle.

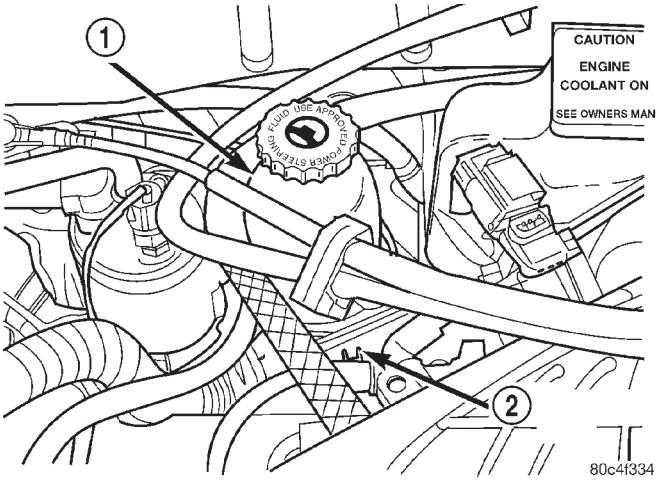

Fig. 39 Power Steering Fluid Reservoir

1 – POWER STEERING FLUID RESERVOIR
2 – RETAINING TAB

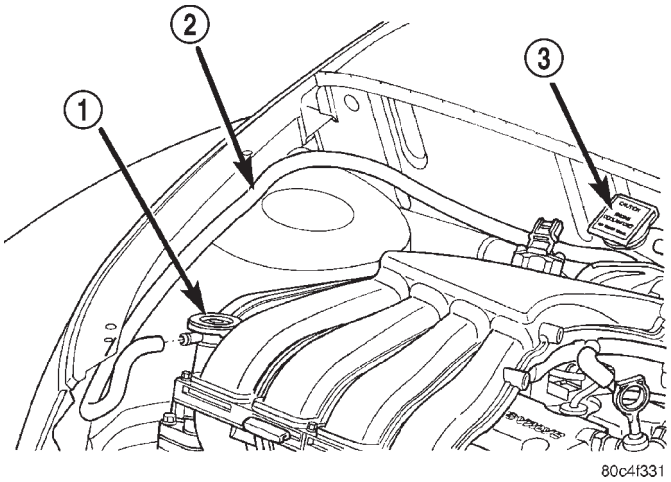

Fig. 40 Recovery Hose

1 – PRESSURE CAP
2 – HOSE
3 – COOLANT RECOVERY BOTTLE

REMOVAL AND INSTALLATION (Continued)

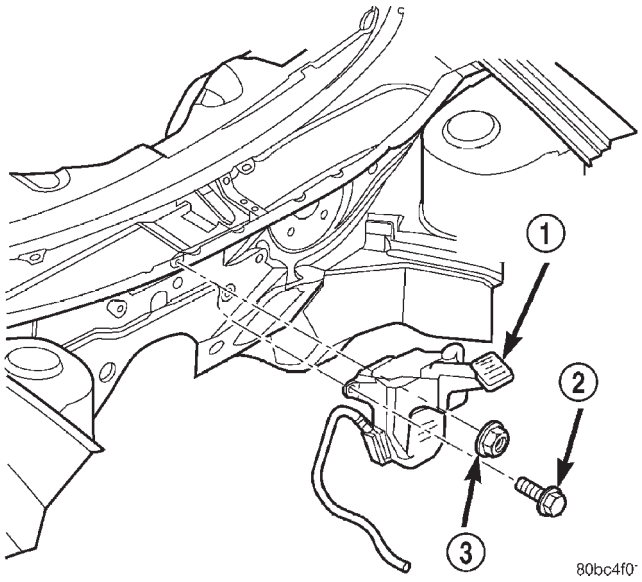

Fig. 41 Coolant Recovery Bottle

1 – COOLANT RECOVERY CONTAINER
2 – SCREW
3 – NUT

INSTALLATION

(1) Install coolant recovery bottle and tighten fasteners to 4 N·m (35 in. lbs.) (Fig. 41).

(2) Connect the MAP sensor connector.

(3) Position and install the power steering fluid reservoir on support bracket (Fig. 39).

(4) Connect recovery hose to coolant outlet connector (Fig. 40).

(5) Fill container to proper level. Refer to Cooling System Refilling in this section.

ENGINE BLOCK HEATER

REMOVAL

(1) Drain coolant from radiator and cylinder block. Refer to Cooling System Draining in this section for procedure.

(2) Detach power cord plug from heater (Fig. 42).

(3) Loosen screw in center of heater. Remove heater assembly (Fig. 42).

(4) If required, remove power cord (Fig. 43).

INSTALLATION

(1) Thoroughly clean core hole and heater seat.

(2) Insert heater assembly with element loop positioned **upward (Fig. 42)**.

(3) With heater seated, tighten center screw securely to assure a positive seal.

(4) If removed, install power cord (Fig. 43).

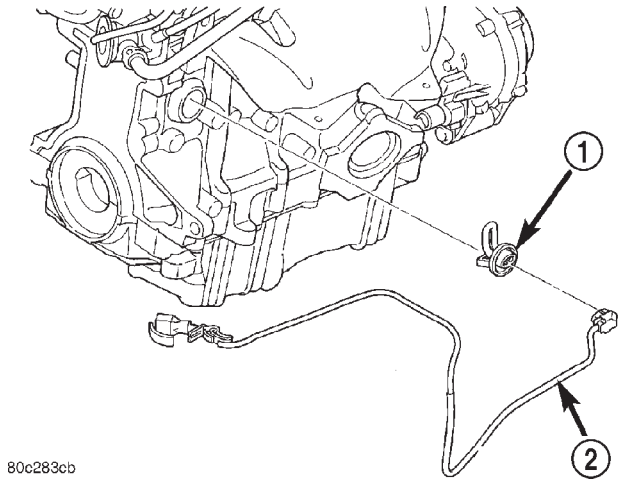

Fig. 42 Engine Block Heater

1 – BLOCK HEATER
2 – POWER CORD

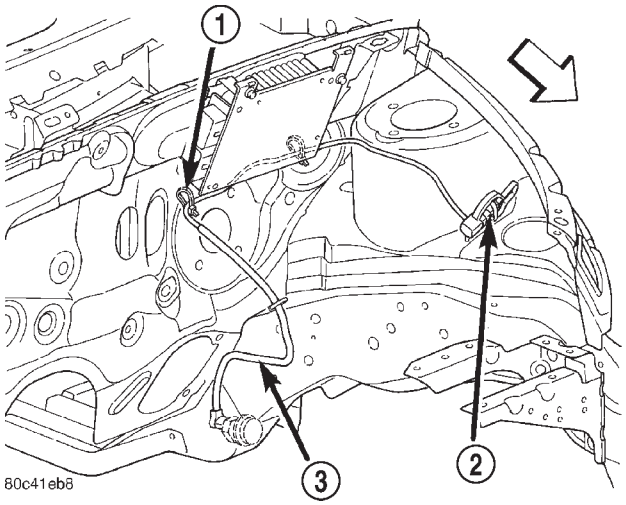

Fig. 43 Engine Block Heater Power Cord

1 – STRAP
2 – CONNECTOR
3 – POWER CORD

NOTE: Ensure power cord is properly routed and secured with straps.

(5) Connect power cord to block heater (Fig. 42).

(6) Fill cooling system with coolant to the proper level, vent air, and inspect for leaks.

REMOVAL AND INSTALLATION (Continued)

ACCESSORY DRIVE BELTS

POWER STEERING PUMP AND AIR CONDITIONING COMPRESSOR BELT

REMOVAL

(1) Remove belt splash shield (Fig. 44).

(2) Using a wrench, rotate belt tensioner clockwise (Fig. 45) until belt can be removed from power steering pump pulley. Gently, release spring tension on tensioner.

(3) Remove belt (Fig. 46).

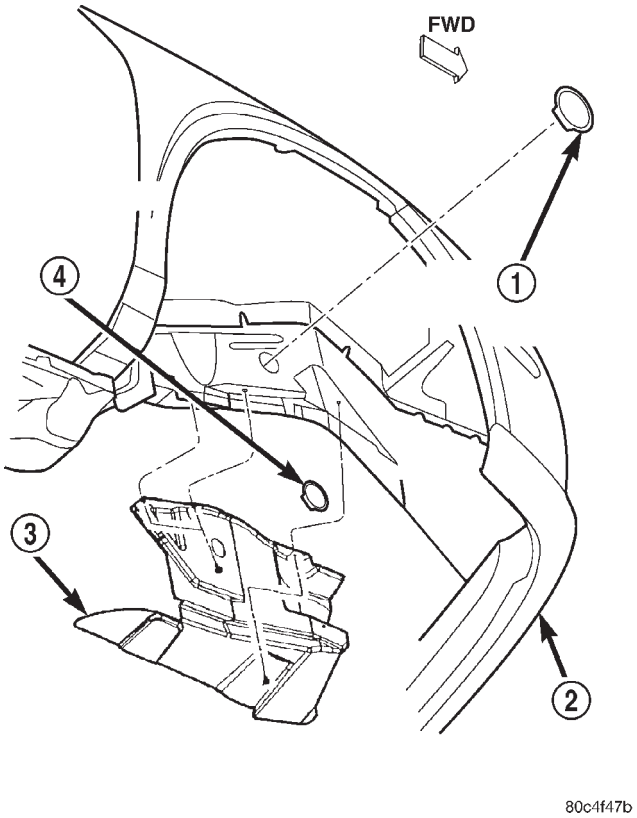

Fig. 44 Splash Shield

1 – RIGHT MOUNT BOLT ACCESS PLUG
2 – FASCIA
3 – SPLASH SHIELD
4 – CRANKSHAFT BOLT ACCESS PLUG

INSTALLATION

(1) Install belt (Fig. 46) over all pulleys except for the power steering pump pulley.

(2) Using a wrench, rotate belt tensioner clockwise (Fig. 45) until belt can be installed onto power steering pulley. Release spring tension onto belt.

NOTE: When installing drive belt onto pulleys, make sure that belt is properly routed and all V-grooves make proper contact with pulley grooves.

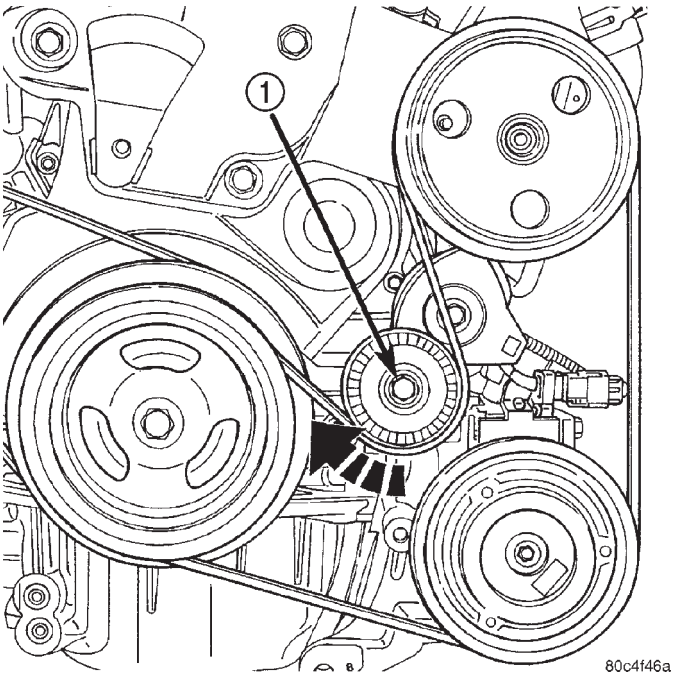

Fig. 45 Accessory Belt—Removing

1 – BOLT

(3) After belt is installed, inspect belt length indicator marks (Fig. 47). The indicator mark should be within the minimum belt length and maximum belt length marks. On a new belt, the indicator mark should align approximately with the nominal belt length mark.

(4) Install belt splash shield (Fig. 44).

GENERATOR BELT

REMOVAL

(1) Remove power steering pump/air conditioning compressor drive belt.

(2) Loosen pivot bolt, then locking nut and adjusting bolt (Fig. 48).

(3) Remove generator belt.

NOTE: When installing drive belt onto pulleys, make sure that belt is properly routed and all V-grooves make proper contact with pulley grooves.

INSTALLATION

(1) Install belt and/or adjust belt tension by tightening adjusting bolt. Adjust belt to specification shown in Belt Tension Chart.

(2) Check belt tension using Special Tool 8371 – Belt Tension Gauge Adapter, and the DRBIII® using the following procedures:

WARNING: DO NOT CHECK BELT TENSION WITH ENGINE RUNNING.

REMOVAL AND INSTALLATION (Continued)

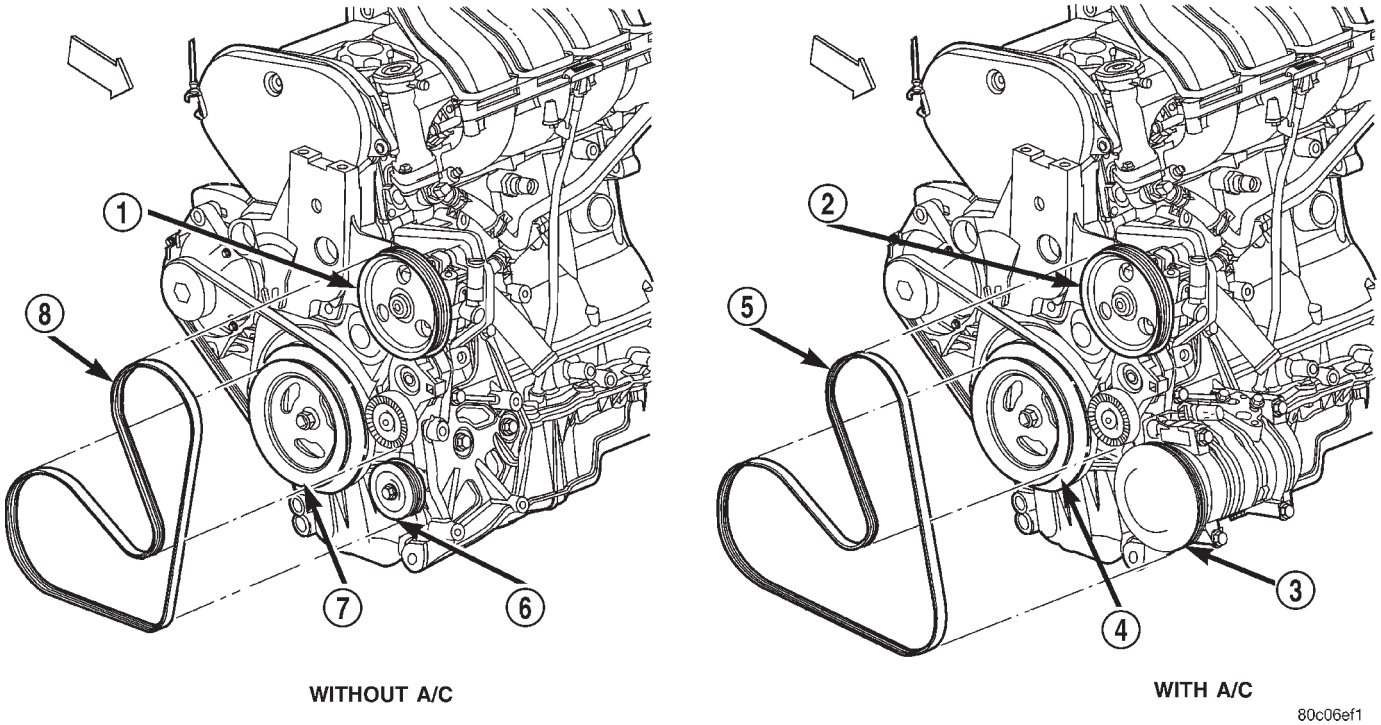

Fig. 46 Power Steering/Air Conditioning Belt

1 – P/S PULLEY
2 – P/S PULLEY
3 – A/C PULLEY
4 – CRANKSHAFT PULLEY
5 – BELT
6 – IDLER PULLEY
7 – CRANKSHAFT PULLEY
8 – BELT

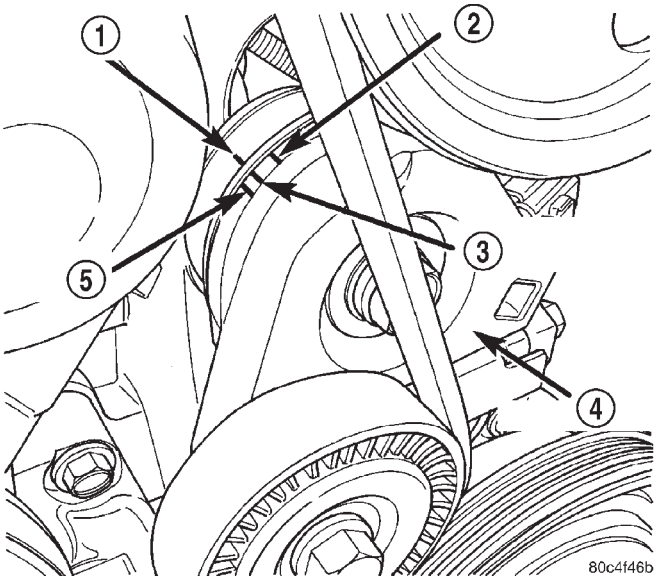

Fig. 47 Belt Length Indicator Marks

1 – BELT LENGTH INDICATOR
2 – MAXIMUM LENGTH
3 – NOMINAL LENGTH
4 – TENSIONER
5 – MINIMUM LENGTH

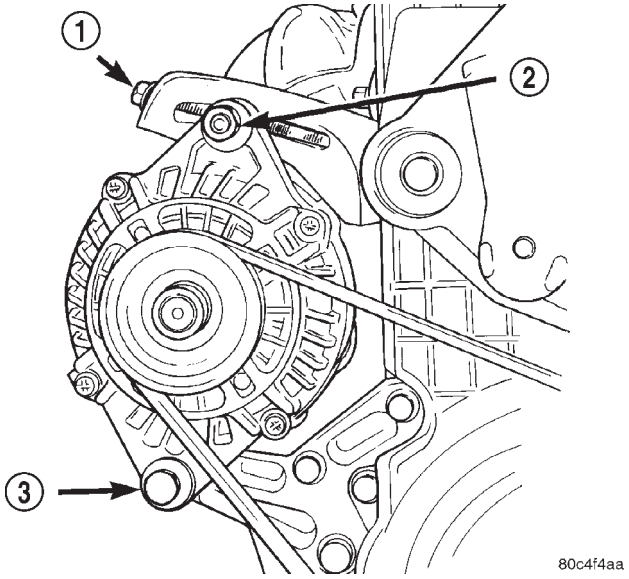

Fig. 48 Generator Belt

1 – ADJUSTING BOLT
2 – LOCKING NUT
3 – PIVOT BOLT

REMOVAL AND INSTALLATION (Continued)

(a) Connect 8371 to the DRBIII® following the instructions provided in tool kit.

(b) Place end of microphone probe approximately 2.54 cm (1 in.) from belt at one of the belt center span locations shown in (Fig. 49).

(c) Pluck the belt a minimum of 3 times. (Use your finger or other suitable object)

(d) The frequency of the belt in hertz (Hz) will display on DRBIII® screen.

(e) Adjust belt to obtain proper frequency (tension). Refer to the belt tension chart for specifications.

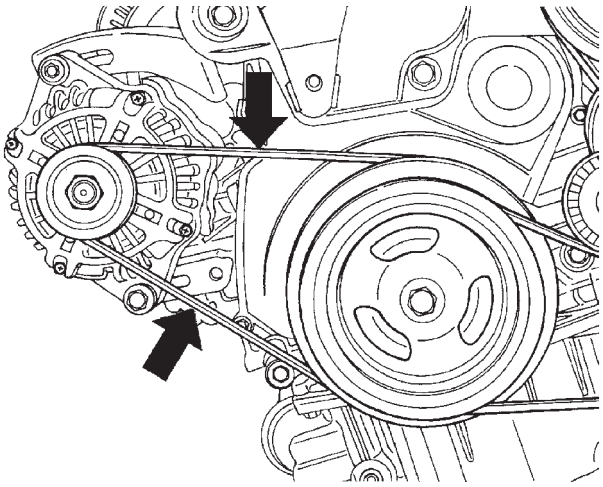

Fig. 49 Belt Center Span Locations

(3) Tighten pivot bolt to 54 N·m (40 ft. lbs.) and locking nut to 54 N·m (40 ft. lbs.) (Fig. 48).

(4) Install power steering pump and A/C compressor drive belt.

BELT TENSION CHART

Accessory Drive Belt	Belt Tension	
Power Steering Pump and A/C Compressor	Dynamic Tensioner	
Generator	New 135 lb.	235-247 Hz
	Used 100 lb.	207-217 Hz

AUTOMATIC BELT TENSIONER & PULLEY

The automatic belt tensioner (Fig. 50) maintains proper tension on the power steering and air conditioning belt. The tensioner pulley can be serviced.

NOTE: Tensioner arm should move freely and maintain 33–46 lb. tension on belt.

REMOVAL

(1) Remove power steering/air conditioning belt. Refer to procedure in this section.

(2) Remove tensioner mounting bolt and remove tensioner assembly (Fig. 50).

(3) Remove tensioner pulley, if replacing the pulley.

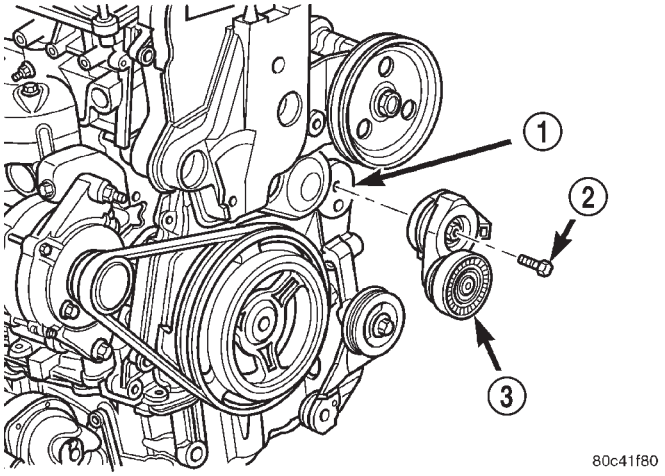

Fig. 50 Automatic Belt Tensioner

1 – TORQUE STRUT BRACKET
2 – BOLT
3 – AUTOMATIC BELT TENSIONER ASSEMBLY

INSTALLATION

(1) Install tensioner pulley and bolt, if removed. Tighten bolt to 27 N·m (20 ft. lbs.).

(2) Install tensioner assembly to engine and tighten bolt to 54 N·M (40 ft. lbs.) (Fig. 50).

(3) Install power steering/air conditioning belt. Refer to procedure in this section.

CLEANING AND INSPECTION

WATER PUMP

Replace water pump body assembly if it has any of these defects:

(1) Cracks or damage on the body.

(2) Coolant leaks from the shaft seal, evident by coolant traces on the pump body.

(3) Loose or rough turning bearing.

(4) Impeller rubs either the pump body or the engine block.

(5) Impeller loose or damaged.

(6) Sprocket or sprocket flange loose or damaged.

CLEANING AND INSPECTION (Continued)

ACCESSORY DRIVE BELTS

CLEANING

Clean all foreign debris from belt pulley grooves. The belt pulleys must be free of oil, grease, and coolants before installing the drive belt.

INSPECTION

Belt replacement under any or all of the following conditions is required:

- Excessive wear
- Frayed cords
- Severe glazing

Poly-V Belt system may develop minor cracks across the ribbed side. These minor cracks are considered normal and acceptable. Cracks parallel are not (Fig. 51).

NOTE: Do not use any type of belt dressing or restorer on Poly-V Belts.

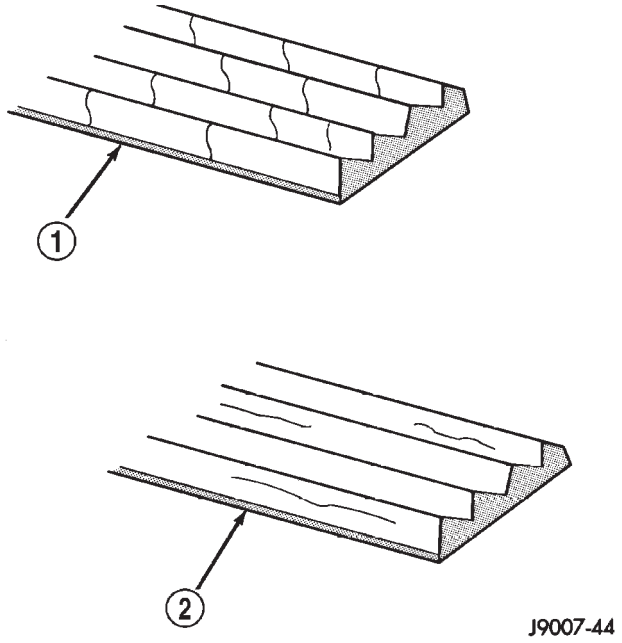

Fig. 51 Drive Belt Wear Pattern

1 – NORMAL CRACKS BELT OK
2 – NOT NORMAL CRACKS REPLACE BELT

COOLING SYSTEM PRESSURE CAP

Hold the cap in your hand, **right side up** (Fig. 52). The vent valve at the bottom of the cap should open with a slight pull. If the rubber gasket has swollen, preventing the valve from opening, replace the cap.

If any light can be seen between vent valve and the rubber gasket, replace the cap. **Use only a replacement cap that has a spring to hold the vent shut.**

A replacement cap must be of the type designed for coolant reserve systems. This design ensures system pressurization.

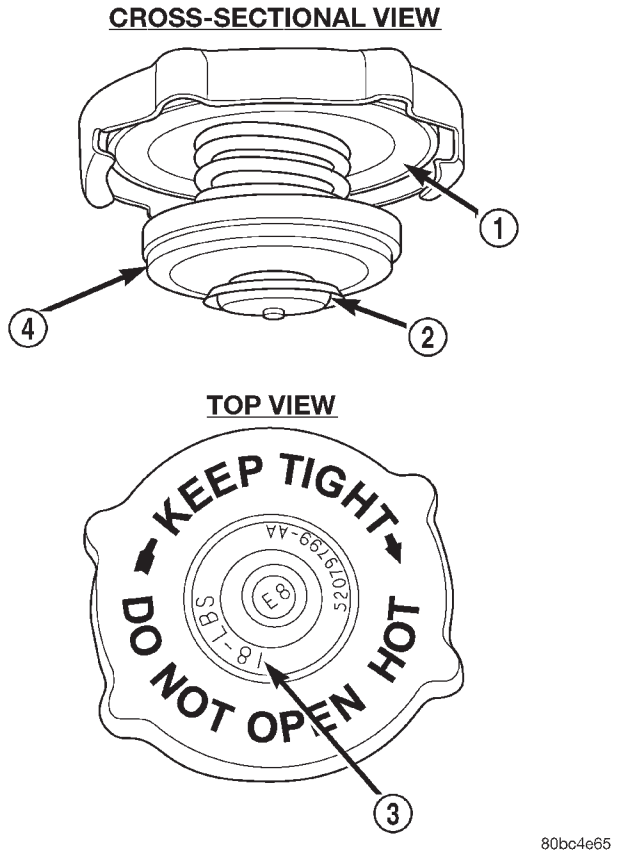

Fig. 52 Cooling System Pressure Cap

1 – FILLER NECK SEAL
2 – VACUUM VENT VALVE
3 – PRESSURE RATING
4 – PRESSURE VALVE

COOLING SYSTEM

CLEANING

CAUTION: Internal radiator pressure must not exceed 138 kPa (20 psi) as damage to radiator may result.

Reverse flushing of cooling system is the forcing of water through the cooling system. This is done using air pressure in the opposite direction of normal coolant flow. It is usually only necessary with very dirty systems with evidence of partial plugging.

(1) Drain cooling system. Remove thermostat housing and thermostat. Install thermostat housing.

(2) Connect a suitable cooling system flusher and follow instructions supplied with flusher.

CLEANING AND INSPECTION (Continued)

INSPECTION

After performing a flush procedure, inspect all hoses, clamps and connections for deterioration and leaks. Inspect radiator and heater core for leaks.

RADIATOR

CLEANING

Clean radiator fins are necessary for good heat transfer. The radiator and air conditioning fins should be cleaned when an accumulation of debris has occurred. With the engine cold, apply cold water and compressed air to the back (engine side) of the radiator to flush the radiator and/or A/C condenser of debris.

INSPECTION

Inspect the radiator side tanks for cracks, broken or missing fittings also inspect the joint where the tanks seam up to the radiator core for signs of leakage and/or deteriorating seals.

Inspect radiator core for corroded, bent or missing cooling fins. Inspect the core for bent or damaged cooling tubes.

AUTOMATIC TRANSMISSION OIL COOLER

CLEANING

Check the external cooler for debris on the cooling fin surfaces. Clean as necessary. For internal cleaning/flushing procedures, refer to TRANSAXLE.

INSPECTION

Inspect all cooler lines and clamps. Replace as necessary.

ADJUSTMENTS

BELT TENSION

For belt tension adjustment procedure, refer to Accessory Drive Belt Removal and Installation procedure.

SPECIFICATIONS

COOLANT PERFORMANCE

Coolant performance is measurable. For heat transfer, pure water absorbs 1 btu for each degree of temperature rise for each pound of water. This formula is altered when necessary additives to control boiling, freezing, and corrosion are added as follows:

- Pure water (1 btu/lbm °F) boils at 100°C (212°F) and freezes at 0°C (32°F).
- 100 percent ethylene glycol (0.7 btu/lbm °F) can cause an engine to run hot, cause detonation, and will freeze at -22°C (-8°F).
- 50/50 Ethylene Glycol and Distilled Water (0.82 btu/lbm °F) is the recommended combination that provides a freeze point of -37°C (-35°F). The radiator, water pump, engine water jacket, pressure cap, thermostat, temperature gauge, coolant sensor and heater are all designed for 50/50 ethylene glycol.

Where required, a 56 percent glycol and 44 percent water mixture will provide a freeze point of -46°C (-50°F).

SELECTION AND ADDITIVES

The use of aluminum cylinder blocks, cylinder heads, intake manifolds, and water pumps require special corrosion protection. Mopar® Antifreeze/Coolant, 5 Year/100,000 Mile Formula (orange in color), or the equivalent is recommended. This coolant provides optimum engine cooling and protection against corrosion when mixed to a freeze point of -37°C (-35°F) to -59°C (-50°F). If it looses color or becomes contaminated; drain, flush, and replace with fresh properly mixed solution.

CAUTION: Do not use well water, or suspect water supply in cooling system. A 50/50 ethylene glycol and distilled water mix is recommended.

SPECIFICATIONS (Continued)

COOLING SYSTEM CAPACITY

7.0 Liters* (7.4 qts.)*
*Capacity includes Heater and Coolant Reserve System.

TORQUE SPECIFICATIONS

DESCRIPTION	N·m	Ft. Lbs.	In. Lbs.
A/C Condenser to Radiator—Screws	8	—	70
Automatic Belt Tensioner Pulley—Bolt	27	20	—
Automatic Belt Tension Assembly—Bolt	54	40	—
Coolant Recovery Bottle—Nut/Screw	4	—	35
Coolant Outlet Connector—Screws	12	—	105
Generator Mounting—Pivot Bolt	54	40	—
Generator Mounting—Locking Nut	54	40	—
Radiator Fan to Radiator—Screws	6	—	55
Thermostat Housing to Cylinder Head—Bolts	28	20	—
Transmission Cooler Hose—Clamps	2	—	18
Transmission Cooler to Radiator—Screws	8	—	70
Water Pump to Engine Block—Bolts	12	—	105
Water Pump Inlet Tube to Engine Block—Bolts	12	—	105

SPECIAL TOOLS

COOLING SYSTEM

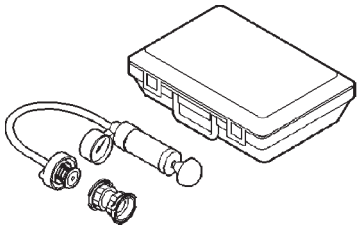

Cooling System Tester – 7700

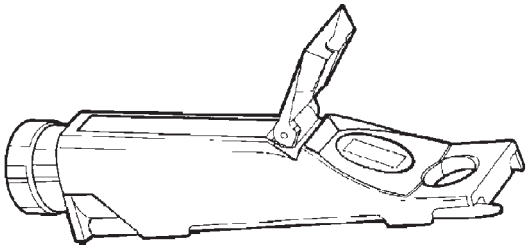

Coolant Refractometer – 8286

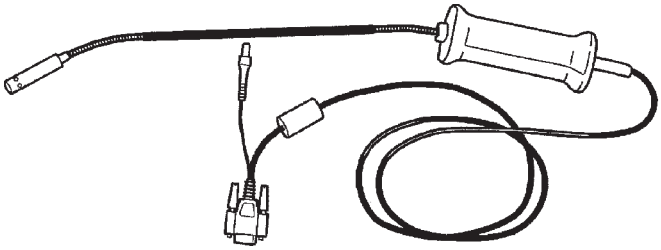

Belt Tension Gauge Adapter – 8371

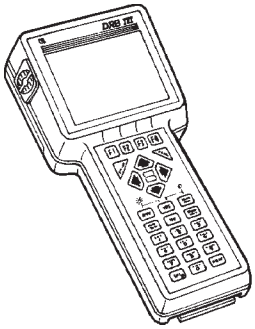

DRBIII® with PEP Module – OT-CH6010A

COOLING SYSTEM

TABLE OF CONTENTS

page

DESCRIPTION AND OPERATION
ACCESSORY DRIVE BELTS 1
REMOVAL AND INSTALLATION
ACCESSORY DRIVE BELTS 1

page

SPECIFICATIONS
TORQUE SPECIFICATIONS 3
SPECIAL TOOLS
COOLING SYSTEM 3

DESCRIPTION AND OPERATION

ACCESSORY DRIVE BELTS

DESCRIPTION

The accessory drive consist of two Poly-V type drive belts. One belt drives the generator, the other drives the power steering pump and air conditioning compressor (if equipped). The power steering/air conditioning belt is tensioned by an automatically controlled belt tensioner. The generator belt is manually tensioned using an adjusting bolt and a locking nut.

REMOVAL AND INSTALLATION

ACCESSORY DRIVE BELTS

POWER STEERING PUMP AND AIR CONDITIONING COMPRESSOR BELT

REMOVAL

(1) Remove belt splash shield.
(2) Using a wrench, rotate belt tensioner clockwise until belt can be removed from power steering pump pulley. Gently, release spring tension on tensioner.
(3) Remove belt (Fig. 1) (Fig. 2).

INSTALLATION

(1) Install belt (Fig. 1) (Fig. 2) over all pulleys except for the power steering pump pulley.
(2) Using a wrench, rotate belt tensioner clockwise until belt can be installed onto power steering pulley. Release spring tension onto belt.

NOTE: When installing drive belt onto pulleys, make sure that belt is properly routed and all V-grooves make proper contact with pulley grooves.

(3) After belt is installed, inspect belt length indicator marks. The indicator mark should be within the minimum belt length and maximum belt length marks. On a new belt, the indicator mark should align approximately with the nominal belt length mark.
(4) Install belt splash shield.

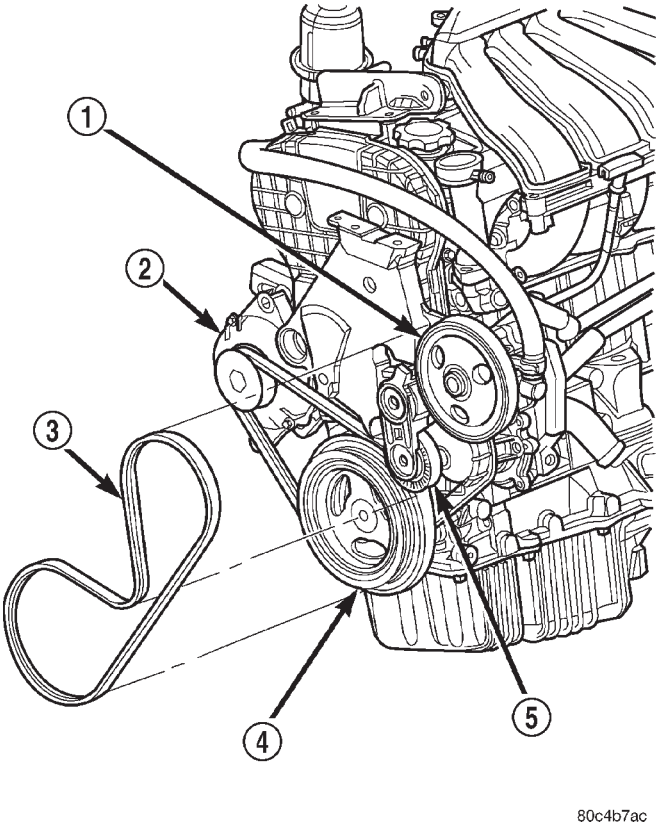

Fig. 1 Accessory Drive Belts Without A/C

1 – POWER STEERING PUMP PULLEY
2 – GENERATOR
3 – ACCESSORY DRIVE BELT
4 – CRANKSHAFT PULLEY
5 – AUTOMATIC BELT TENSIONER

GENERATOR BELT

REMOVAL

(1) Remove power steering pump/air conditioning compressor drive belt.

REMOVAL AND INSTALLATION (Continued)

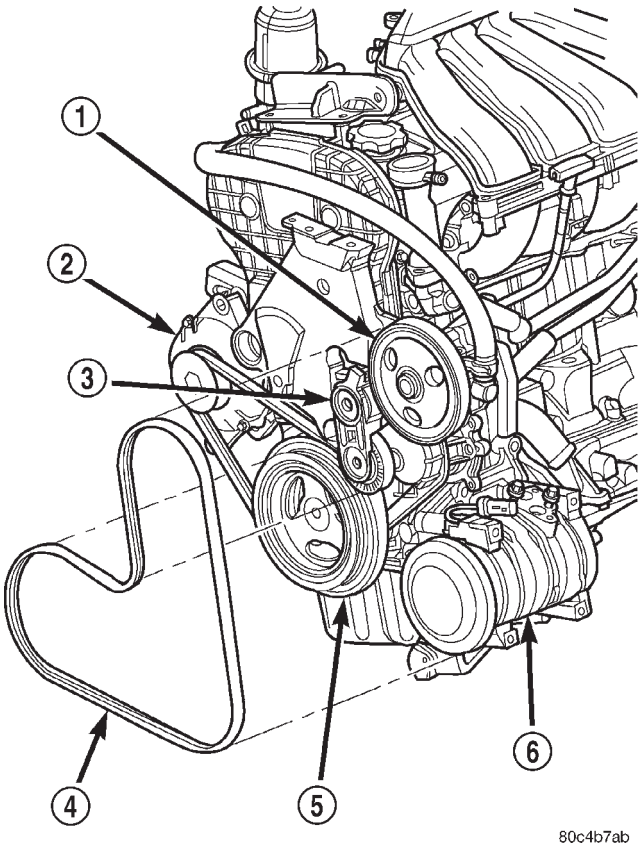

Fig. 2 Accessory Drive Belts With A/C

1 – POWER STEERING PUMP PULLEY
2 – GENERATOR
3 – AUTOMATIC BELT TENSIONER
4 – ACCESSORY DRIVE BELT
5 – CRANKSHAFT PULLEY
6 – A/C COMPRESSOR

(2) Loosen pivot bolt, then locking nut and adjusting bolt (Fig. 3).

(3) Remove generator belt.

NOTE: When installing drive belt onto pulleys, make sure that belt is properly routed and all V-grooves make proper contact with pulley grooves.

INSTALLATION

(1) Install belt and/or adjust belt tension by tightening adjusting bolt. Adjust belt to specification shown in Belt Tension Chart.

(2) Check belt tension using Special Tool 8371 – Belt Tension Gauge Adapter, and the DRBIII® using the following procedures:

WARNING: DO NOT CHECK BELT TENSION WITH ENGINE RUNNING.

(a) Connect 8371 to the DRBIII® following the instructions provided in tool kit.

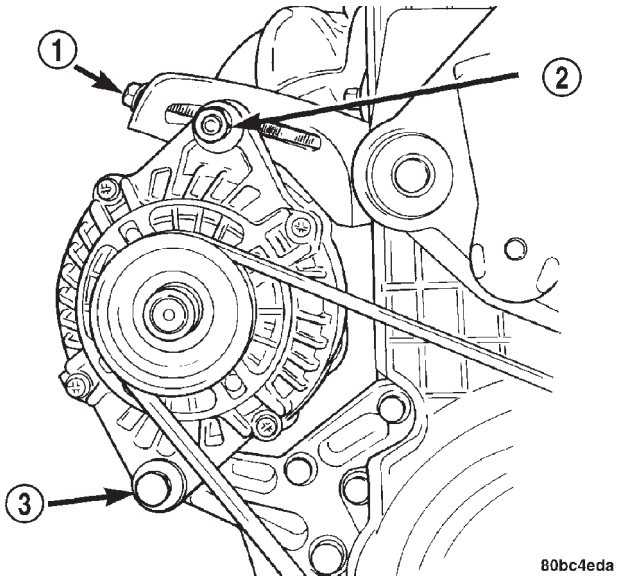

Fig. 3 Generator Belt

1 – ADJUSTING BOLT
2 – LOCKING NUT
3 – PIVOT BOLT

(b) Place end of microphone probe approximately 2.54 cm (1 in.) from belt at one of the belt center span locations shown in (Fig. 4).

(c) Pluck the belt a minimum of 3 times. (Use your finger or other suitable object)

(d) The frequency of the belt in hertz (Hz) will display on DRBIII® screen.

(e) Adjust belt to obtain proper frequency (tension). Refer to the belt tension chart for specifications.

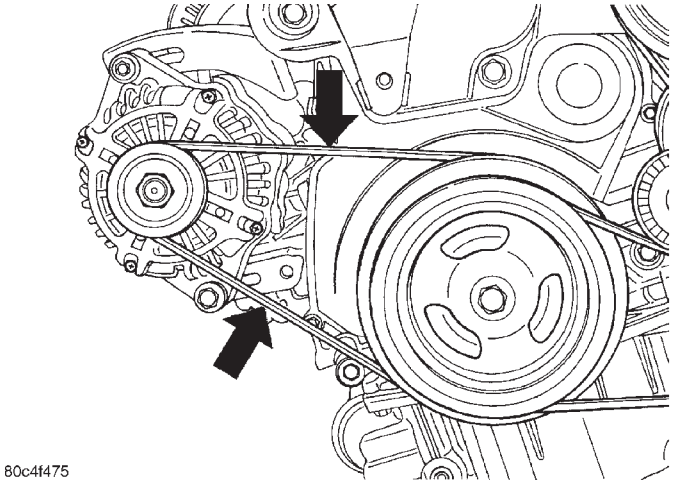

Fig. 4 Belt Center Span Locations

(3) Tighten pivot bolt to 54 N·m (40 ft. lbs.) and locking nut to 54 N·m (40 ft. lbs.) (Fig. 3).

(4) Install power steering pump and A/C compressor drive belt.

REMOVAL AND INSTALLATION (Continued)

BELT TENSION CHART

Accessory Drive Belt	Belt Tension	
Power Steering Pump and A/C Compressor	Dynamic Tensioner	
Generator	New 135 lb. Used 100 lb.	158-162 Hz 127-133 Hz

SPECIFICATIONS

TORQUE SPECIFICATIONS

DESCRIPTION	N·m	Ft. Lbs.	In. Lbs.
Automatic Belt Tensioner Pulley—Bolt	27	20	—
Automatic Belt Tension Assembly—Bolt	54	40	—
Generator Mounting—Pivot Bolt	54	40	—
Generator Mounting—Locking Nut	54	40	—

SPECIAL TOOLS

COOLING SYSTEM

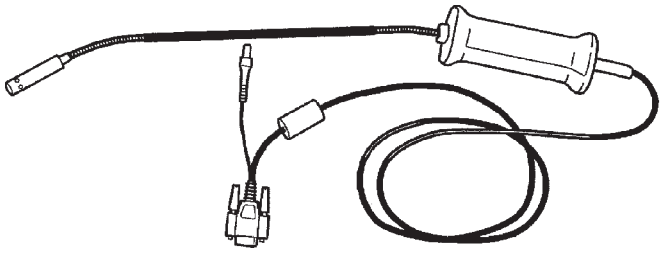

Belt Tension Gauge Adapter – 8371

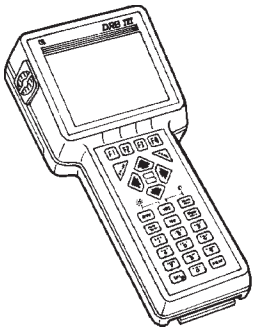

DRB III® with PEP Module – OT-CH6010A

2001 PT CRUISER

BATTERY

TABLE OF CONTENTS

page

DESCRIPTION AND OPERATION
BATTERY 1
BATTERY IGNITION OFF DRAW (IOD) 2
DIAGNOSIS AND TESTING
BATTERY BUILT-IN TEST INDICATOR 2
BATTERY IGNITION OFF DRAW (IOD) 4
BATTERY LOAD TEST 4
BATTERY OPEN CIRCUIT VOLTAGE 5
SERVICE PROCEDURES
BATTERY CHARGING 5
BATTERY CHARGING TIME REQUIRED 6
CHARGING COMPLETELY DISCHARGED BATTERY 7
REMOVAL AND INSTALLATION
BATTERY 7
BATTERY CABLES 8
BATTERY HEATER 9
BATTERY THERMOWRAP 9
BATTERY TRAY 10
CLEANING AND INSPECTION
BATTERY 10
SPECIFICATIONS
BATTERY SPECIFICATIONS 11
TORQUE 11

DESCRIPTION AND OPERATION

BATTERY

DESCRIPTION

The Battery is a 12-volt, top post, non-servicable unit located underneath the air cleaner box in the left front corner of the engine compartment.

The battery stores, stabilizes, and delivers electrical current to operate various electrical systems in the vehicle. The determination of whether a battery is good or bad is made by its ability to accept a charge. It also must supply high-amperage current for a long enough period to be able to start the vehicle.

The original equipment (OE) battery is equipped with a hydrometer (test indicator) built into the battery cover.

OPERATION

The capability of the battery to store electrical current comes from a chemical reaction. This reaction takes place between the sulfuric acid solution (electrolyte) and the lead +/- plates in each cell of the battery. As the battery discharges, the plates react with the acid from the electrolyte. When the charging system charges the battery, the water is converted to sulfuric acid in the battery. The concentration of acid in the electrolyte is measured as specific gravity using a hydrometer. The specific gravity indicates the battery's state-of-charge. The OE battery is sealed and water cannot be added.

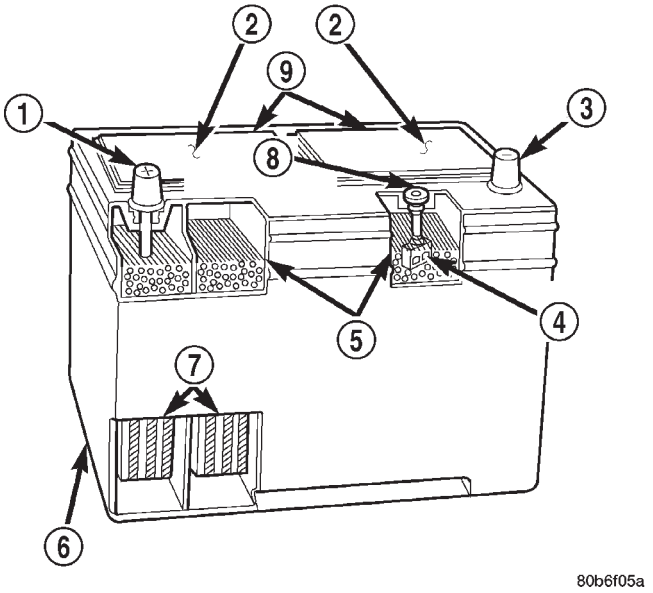

Fig. 1 Battery - Typical

1 – POSITIVE POST
2 – VENT CAPS
3 – NEGATIVE POST
4 – GREEN BALL
5 – ELECTROLYTE LEVEL
6 – MAINTENANCE-FREE BATTERY
7 – PLATE GROUPS
8 – TEST INDICATOR
9 – VENTS

The battery is vented to release gases that are created when the battery is being charged and discharged. The battery top, posts, and terminals should

DESCRIPTION AND OPERATION (Continued)

be cleaned when other under hood maintenance is performed.

When the electrolyte level is below the top of the plates, Clear in the test Indicator, the battery must be replaced. The battery must be completely charged, and the battery top, posts, and cable clamps must be cleaned before diagnostic procedures are performed.

BATTERY IGNITION OFF DRAW (IOD)

DESCRIPTION

A completely normal vehicle will have a small amount of current drain on the battery with the key out of the ignition. It can range from 5 to 25 milliamperes after all the modules time out.

OPERATION

If a vehicle will not be operated for approximately 20 days, the IOD fuse should be pulled to eliminate the vehicle electrical drain on the battery. The IOD fuse is located in the Fuse Block. Refer to the Fuse Cover/End Cap for proper fuse.

DIAGNOSIS AND TESTING

BATTERY BUILT-IN TEST INDICATOR

USING TEST INDICATOR

The Test Indicator (Fig. 8), (Fig. 2) and (Fig. 3) measures the specific gravity of the electrolyte. Specific Gravity (SG) of the electrolyte will show state-of-charge (voltage). The test indicator WILL NOT show cranking capacity of the battery. Refer to Battery Load Test for more information. Look into the sight glass (Fig. 8), (Fig. 3) and note the color of the indicator. Refer to the following description of colors:

GREEN = 75 to 100% state-of-charge

The battery is adequately charged for further testing and may be returned to use. If the vehicle will not crank for a maximum 15 seconds, refer to Battery Load Test in this group for more information.

BLACK OR DARK = 0 to 75% state-of-charge

The battery is INADEQUATELY charged and must be charged until green dot is visible, (12.4 volts or greater) before the battery is tested or returned to use. Refer to Causes of Battery Discharging in this group for more information.

CLEAR COLOR = Replace Battery

WARNING: DO NOT CHARGE, ASSIST BOOST, LOAD TEST, OR ADD WATER TO THE BATTERY WHEN CLEAR COLOR DOT IS VISIBLE. PERSONAL INJURY MAY OCCUR.

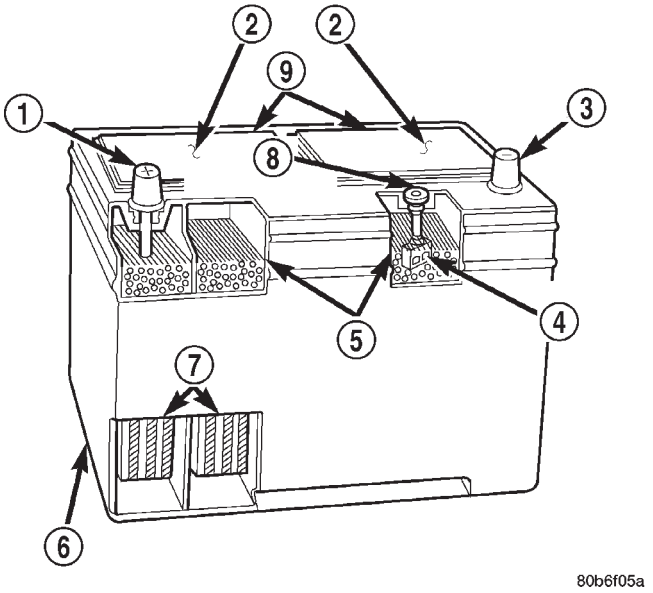

Fig. 2 Battery Construction and Test Indicator

1 – POSITIVE POST
2 – VENT CAPS
3 – NEGATIVE POST
4 – GREEN BALL
5 – ELECTROLYTE LEVEL
6 – MAINTENANCE-FREE BATTERY
7 – PLATE GROUPS
8 – TEST INDICATOR
9 – VENTS

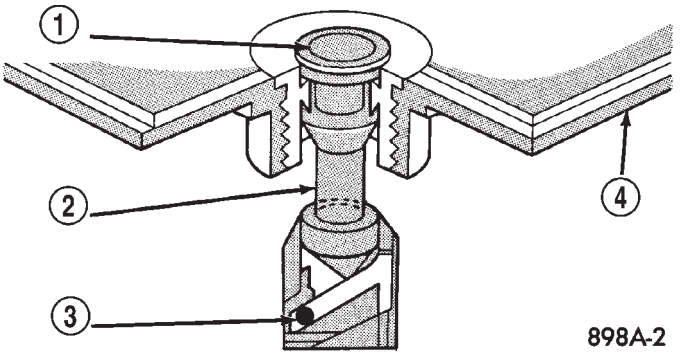

Fig. 3 Test Indicator

1 – SIGHT GLASS
2 – PLASTIC TUBE
3 – GREEN BALL
4 – BATTERY TOP

A clear color dot shows electrolyte level in battery is below the test indicator (Fig. 8). Water cannot be added to a maintenance free battery. The battery must be replaced. A low electrolyte level may be caused by an over charging condition. Refer to Charging System to determine if the charging system is OK or not.

DIAGNOSIS AND TESTING (Continued)

CAUSES OF BATTERY DISCHARGING

It is normal to have a small 5 to 25 milliamperes continuous electrical draw from the battery. This draw will take place with the ignition in the OFF position, and the courtesy, dome, storage compartments, and engine compartment lights OFF. The continuous draw is due to various electronic features or accessories that require electrical current with the ignition OFF to function properly. When a vehicle is not used over an extended period of approximately 20 days the IOD fuse should be pulled. The fuse is located in the PDC. Disconnecting this fuse will reduce the level of battery discharge. Refer to Battery Diagnosis and Testing table and to the proper procedures.

BATTERY DIAGNOSIS AND TESTING

STEPS	POSSIBLE CAUSE	CORRECTION
VISUAL INSPECTION CHECK FOR POSSIBLE DAMAGE TO BATTERY AND CLEAN BATTERY.	(1) LOOSE BATTERY POST, CRACKED BATTERY COVER OR CASE, LEAKS OR ANY OTHER PHYSICAL (2) BATTERY OK.	(1) REPLACE BATTERY (2) CHECK STATE OF CHARGE. REFER TO TEST INDICATOR.
TEST INDICATOR CHECK CHARGE EYE COLOR	(1) GREEN (2) BLACK (3) CLEAR	(1) BATTERY IS CHARGED. PERFORM BATTERY 0PEN CIRCUIT VOLTAGE TEST (2) PERFORM BATTERY CHARGING PROCEDURE. (3) REPLACE BATTERY.
BATTERY OPEN CIRCUIT VOLTAGE TEST	(1) BATTERY IS ABOVE 12.40 VOLTS (2) BATTERY IS BELOW 12.40 VOLTS.	(1) PERFORM THE BATTERY LOAD TEST. (2) PERFORM BATTERY CHARGING PROCEDURE.
BATTERY CHARGING	(1) BATTERY ACCEPTED CHARGE. (2) BATTERY WILL NOT ACCEPT CHARGE	(1) ENSURE THAT THE INDICATOR EYE IS GREEN AND PERFORM BATTERY 0PEN CIRCUIT VOLTAGE TEST (2) PERFORM CHARGING A COMPLETELY DISCHARGED BATTERY.
BATTERY LOAD TEST	(1) ACCEPTABLE MINIMUM VOLTAGE. (2) UNACCEPTABLE MINIMUM VOLTAGE	(1) BATTERY IS OK TO PUT IN USE, PERFORM BATTERY IGNITION OFF DRAW TEST. (2) REPLACE BATTERY AND PERFORM BATTERY IGNITION OFF DRAW TEST.
CHARGING A COMPLETELY DISCHARGED BATTERY	(1) BATTERY ACCEPTED CHARGE. (2) BATTERY WILL NOT ACCEPT CHARGE.	(1) ENSURE THAT THE INDICATOR EYE IS GREEN AND PERFORM BATTERY 0PEN CIRCUIT VOLTAGE TEST. (2) REPLACE BATTERY.
IGNITION OFF DRAW TEST	(1) IOD IS 5-25 MILLIAMPERES. (2) IOD EXCEEDS 25 MILLIAMPERES.	(1) VEHICLE IS NORMAL. (2) ELIMINATE EXCESS IOD DRAW.

DIAGNOSIS AND TESTING (Continued)

ABNORMAL BATTERY DISCHARGING

The following should be checked for and verified:

- Corroded battery posts, cables or terminals.
- Loose or worn generator drive belt.
- Electrical loads that exceed the output of the charging system due to equipment or accessories installed after delivery.
- Slow driving speeds in heavy traffic conditions or prolonged idling with high-amperage electrical systems in use.
- Defective electrical circuit or component causing excess Ignition Off Draw (IOD). Refer to Battery Ignition Off Draw (IOD).
- Defective charging system.
- Defective battery.

BATTERY IGNITION OFF DRAW (IOD)

DESCRIPTION

A completely normal vehicle will have a small amount of current drain on the battery with the key out of the ignition. It can range from 5 to 25 milliamperes after all the modules time out.

OPERATION

If a vehicle will not be operated for approximately 20 days, the IOD fuse should be pulled to eliminate the vehicle electrical drain on the battery. The IOD fuse is located in the Fuse Block. Refer to the Fuse Cover for proper fuse.

BATTERY LOAD TEST

A fully charged battery must have cranking capacity, to provide the starter motor and ignition system enough power to start the engine over a broad range of ambient temperatures. A battery load test will verify the actual cranking capability of the battery.

WARNING: IF BATTERY SHOWS SIGNS OF FREEZING, LEAKING, LOOSE POSTS, OR EXCESSIVELY LOW ELECTROLYTE LEVEL, DO NOT TEST. ACID BURNS OR AN EXPLOSIVE CONDITION MAY RESULT.

(1) Remove both battery cables, negative cable first. The battery top, cables and posts should be clean. If green dot is not visible in indicator, charge the battery. Refer to Battery Charging Procedures in this group.

(2) Connect a Volt/Ammeter/Load tester to the battery posts (Fig. 4). Rotate the load control knob of the Carbon pile rheostat to apply a 300 amp load. Apply this load for 15 seconds to remove the surface charge from the battery, and return the control knob to off (Fig. 5).

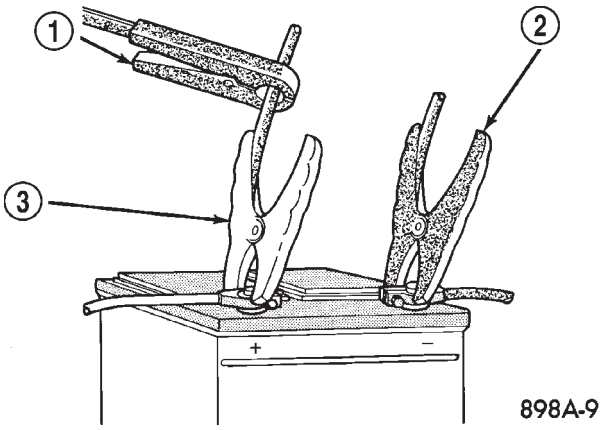

Fig. 4 Volt-Ammeter Load Tester Connections - Typical

1 – INDUCTION AMPMETER CLAMP
2 – NEGATIVE CLAMP
3 – POSITIVE CLAMP

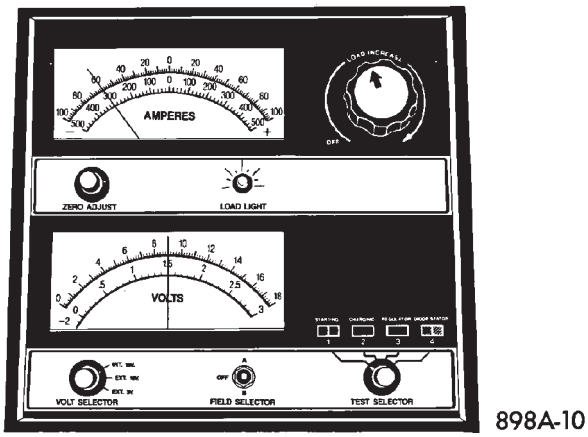

Fig. 5 Remove Surface Charge From Battery

(3) Allow the battery to stabilize for 2 minutes, and then verify open circuit voltage.

(4) Rotate the load control knob on the tester to maintain 50% of the battery cold crank rating for 15 seconds (Fig. 6). Record the loaded voltage reading and return the load control to off. Refer to the Battery Specifications at the rear of this group.

(5) Voltage drop will vary according to battery temperature at the time of the load test. Battery temperature can be estimated by the temperature of exposure over the preceding several hours. If the battery has been charged or boosted a few minutes prior to the test, the battery would be slightly warmer. Refer to the Battery Load Test Temperatures table for proper loaded voltage reading:

(6) If battery passes load test, it is in good condition and further tests are not necessary. If it fails load test, it should be replaced.

DIAGNOSIS AND TESTING (Continued)

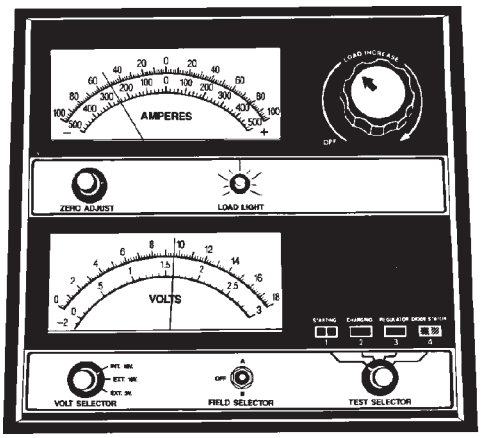

898A-11

Fig. 6 Load 50% Cold Crank Rating

BATTERY LOAD TEST TEMPERATURES

MINIMUM VOLTAGE	TEMPERATURE	
	°F	°C
9.6 VOLTS	70° AND ABOVE	21° AND ABOVE
9.5 VOLTS	60°	16°
9.4 VOLTS	50°	10°
9.3 VOLTS	40°	4°
9.1 VOLTS	30°	-1°
8.9 VOLTS	20°	-7°
8.7 VOLTS	10°	-12°
8.5 VOLTS	0°	-18°

BATTERY OPEN CIRCUIT VOLTAGE

An open circuit voltage no load test shows the state of charge of a battery and whether it is ready for a load test at 50 percent of the battery's cold crank rating. Refer to Battery Load Test. If a battery has open circuit voltage reading of 12.4 volts or greater, and will not pass the load test, replace the battery because it is defective. To test open circuit voltage, perform the following operation.

(1) Remove both battery cables, negative cable first. Battery top, cables and posts should be clean. If green dot is not visible in indicator, charge the battery. Refer to Service Procedures, Battery Charging in this section.

(2) Connect a Volt/Ammeter/Load tester to the battery posts (Fig. 4). Rotate the load control knob of the carbon pile rheostat to apply a 300 amp load. Apply this load for 15 seconds to remove the surface charge from the battery, and return the control knob to off (Fig. 5).

(3) Allow the battery to stabilize for 2 minutes, and then verify the open circuit voltage (Fig. 7).

(4) This voltage reading will approximate the state of charge of the battery. It will not reveal battery cranking capacity. Refer to Battery Open Circuit Voltage table.

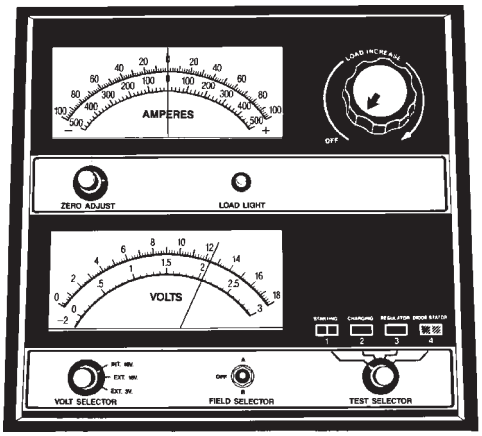

898A-7

Fig. 7 Testing Open Circuit Voltage

BATTERY OPEN CIRCUIT VOLTAGE

OPEN CIRCUIT VOLTS	CHARGE PERCENTAGE
11.7 VOLTS OR LESS	0%
12.0 VOLTS	25%
12.2 VOLTS	50%
12.4 VOLTS	75%
12.6 VOLTS OR MORE	100%

SERVICE PROCEDURES

BATTERY CHARGING

A battery is considered fully charged when it will meet all the following requirements.

- It has an open circuit voltage charge of at least 12.4 volts. Refer to the Battery Open Circuit Voltage table in this section.
- It passes the 15 second load test. Refer to Battery Load Test in this section.
- The built in test indicator dot is GREEN (Fig. 8).

NOTE: The battery cannot be refilled with water, it must be replaced.

SERVICE PROCEDURES (Continued)

WARNING: DO NOT CHARGE A BATTERY THAT HAS EXCESSIVELY LOW ELECTROLYTE LEVEL. BATTERY MAY SPARK INTERNALLY AND EXPLODE. EXPLOSIVE GASES FORM OVER THE BATTERY. DO NOT SMOKE, USE FLAME, OR CREATE SPARKS NEAR BATTERY. DO NOT ASSIST BOOST OR CHARGE A FROZEN BATTERY. BATTERY CASING MAY FRACTURE. BATTERY ACID IS POISON, AND MAY CAUSE SEVERE BURNS. BATTERIES CONTAIN SULFURIC ACID. AVOID CONTACT WITH SKIN, EYES, OR CLOTHING. IN THE EVENT OF CONTACT, FLUSH WITH WATER AND CALL PHYSICIAN IMMEDIATELY. KEEP OUT OF REACH OF CHILDREN.

CAUTION: Disconnect the battery NEGATIVE cable first, before charging battery to avoid damage to electrical systems. Lift the red battery boot cover from the positive cable clamp. Do not exceed 16.0 volts while charging battery. Refer to the instructions supplied with charging equipment

Battery electrolyte may bubble inside of battery case while being charged properly. If the electrolyte boils violently, or is discharged from the vent holes while charging, immediately reduce charging rate or turn off charger. Evaluate battery condition. Battery damage may occur if charging is excessive.

Some battery chargers are equipped with polarity sensing devices to protect the charger or battery from being damaged if improperly connected. If the battery state of charge is too low for the polarity sensor to detect, the sensor must be bypassed for charger to operate. Refer to operating instructions provided with battery charger being used.

CAUTION: Charge battery until test indicator appears green. Do not overcharge.

It may be necessary to jiggle the battery or vehicle to bring the green dot in the test indicator into view.

After the battery has been charged to 12.4 volts or greater, perform a load test to determine cranking capacity. Refer to Diagnosis and Testing, Battery Load Test in this section. If the battery passes the load test, the battery is OK to use. If battery will not pass the load test, it must be replaced. Properly clean and inspect battery hold downs, tray, terminals, cables, posts, and top before completing service.

BATTERY CHARGING TIME REQUIRED

WARNING: NEVER EXCEED 20 AMPS WHEN CHARGING A COLD -1°C (30°F) BATTERY. PERSONAL INJURY MAY RESULT.

The time required to charge a battery will vary depending upon the following factors.

SIZE OF BATTERY

A completely discharged large heavy-duty battery may require more recharging time than a completely discharged small capacity battery. Refer to the Battery Charging Timetable in this section for charging times.

BATTERY CHARGING TIMETABLE

CHARGING AMPERAGE	5 AMPERES	10 AMPERES	20 AMPERES
OPEN CIRCUIT VOLTAGE	HOURS CHARGING AT 21° C (70° F)		
12.25 TO 12.49	6 HOURS	3 HOURS	1.5 HOURS
12.00 TO 12.24	10 HOURS	5 HOURS	2.5 HOURS
10.00 TO 11.99	14 HOURS	7 HOURS	3.5 HOURS
*BELOW 10.00	18 HOURS	9 HOURS	4.5 HOURS
*REFER TO CHARGING A COMPLETELY DISCHARGED BATTERY			

TEMPERATURE

A longer time will be needed to charge a battery at -18°C (0°F) than at 27°C (80°F). When a fast charger is connected to a cold battery, current accepted by battery will be very low at first. In time, the battery will accept a higher rate as battery temperature warms.

CHARGER CAPACITY

A charger which can supply only five amperes will require a much longer period of charging than a charger that can supply 20 amperes or more.

SERVICE PROCEDURES (Continued)

STATE OF CHARGE

A completely discharged battery requires more charging time than a partially charged battery. Electrolyte is nearly pure water in a completely discharged battery. At first, the charging current amperage will be low. As water is converted back to sulfuric acid inside the battery, the current amp rate will rise. Also, the specific gravity of the electrolyte will rise, bringing the green ball (Fig. 8) into view at approximately 75 percent state-of-charge.

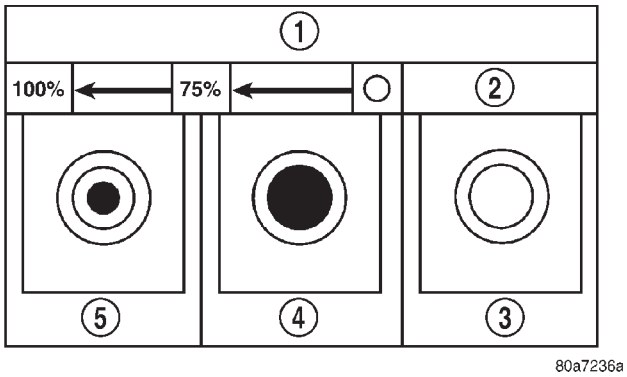

Fig. 8 Reading Test Indicator

1 – TEST INDICATOR/STATE OF CHARGE
2 – REPLACE BATTERY
3 – CLEAR
4 – BLACK
5 – GREEN

CHARGING COMPLETELY DISCHARGED BATTERY

The following procedure should be used to recharge a completely discharged battery. Unless procedure is properly followed, a good battery may be needlessly replaced. Refer to Battery Charging Rate Table for proper charging time.

BATTERY CHARGING RATE

VOLTAGE	HOURS
16.0 VOLTS MAXIMUM	UP TO 4 HOURS
14.0 TO 15.9 VOLTS	UP TO 8 HOURS
13.9 VOLTS OR LESS	UP TO 16 HOURS

(1) Measure the voltage at battery posts with a voltmeter accurate to 1/10 volt (Fig. 9). If below 10 volts, charge current will be low, and it could take some time before it accepts a current in excess of a few milliamperes. Such low current may not be detectable on amp meters built into many chargers.

(2) Connect charger leads. Some chargers feature polarity protection circuitry that prevents operation unless charger is connected to battery posts correctly. A completely discharged battery may not have

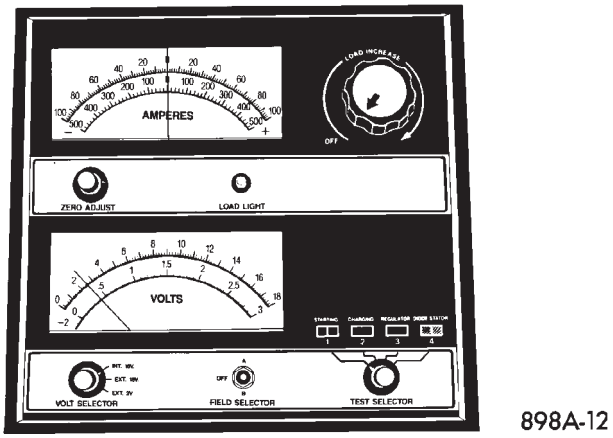

Fig. 9 Voltmeter Accurate to 1/10 Volt (Connected)

enough voltage to activate this circuitry. This may happen even though the leads are connected properly.

(3) Battery chargers vary in the amount of voltage and current they provide. For the time required for the battery to accept measurable charger current at various voltages, refer to the Battery Charging Rate table. If charge current is still not measurable after charging times, the battery should be replaced. If charge current is measurable during charging time, the battery may be good, and charging should be completed in the normal manner.

REMOVAL AND INSTALLATION

BATTERY

REMOVAL

WARNING: TO PROTECT THE HANDS FROM BATTERY ACID, A SUITABLE PAIR OF HEAVY DUTY RUBBER GLOVES, NOT THE HOUSEHOLD TYPE, SHOULD BE WORN WHEN REMOVING OR SERVICING A BATTERY. SAFETY GLASSES ALSO SHOULD BE WORN.

(1) Make sure ignition switch is in OFF position and all accessories are OFF.

(2) Open hood.

(3) Remove Air Cleaner Box. Refer to Fuel Delivery, Air Cleaner Box Removal and Installation.

(4) Disconnect and isolate the battery negative cable then the positive cable (Fig. 10).

(5) Loosen bolt and retainer that holds the battery down to the tray (Fig. 11).

(6) Lift battery out of battery tray and remove from vehicle.

(7) Remove thermowrap from battery.

REMOVAL AND INSTALLATION (Continued)

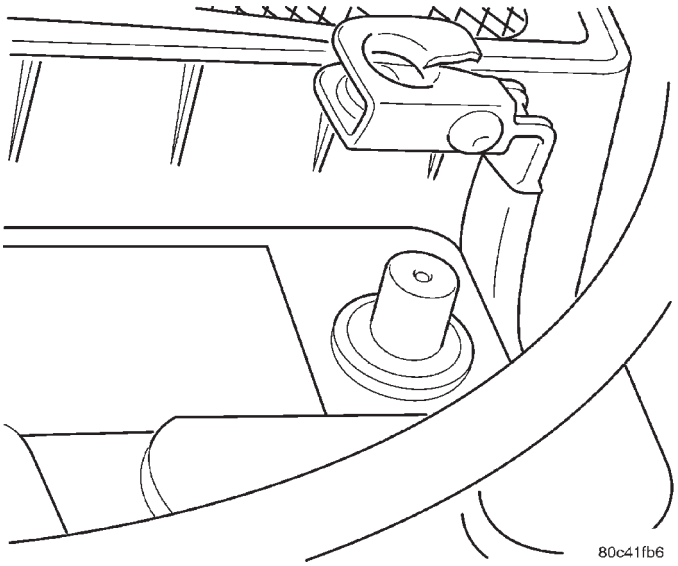

Fig. 10 Battery Negative Cable Remove/Install

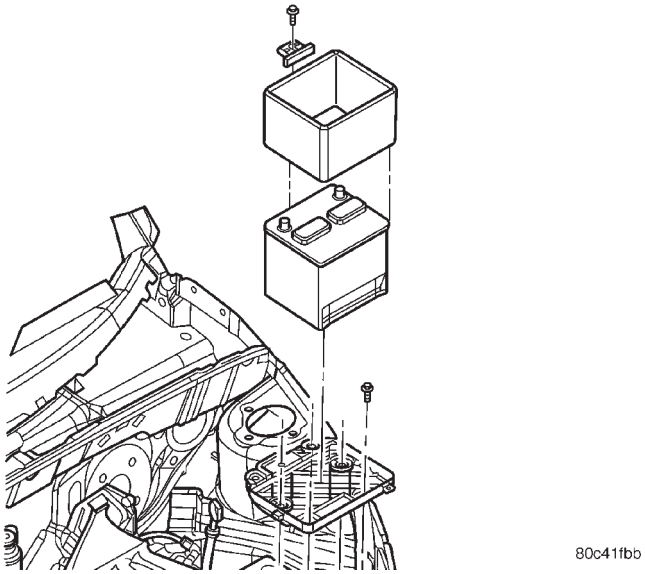

Fig. 11 Battery Remove/Install

INSTALLATION

When replacing battery, the Thermowrap MUST be transferred to the new battery. Refer to Battery Thermowrap Removal and Installation in this section.

(1) Install battery in vehicle making sure that the thermowrap is present and battery is properly positioned on battery tray.

(2) Install battery hold down clamp, making sure that it is properly positioned on battery.

(3) Connect battery cable clamps to battery posts. Install battery positive cable first.

(4) Tighten clamp nuts securely.

(5) Close hood.

(6) Verify operation of vehicle and systems.

BATTERY CABLES

NEGATIVE BATTERY CABLE

REMOVAL

(1) Open hood.

(2) Remove Battery. Refer to Removal and Installation, Battery in this section.

(3) Remove Battery Tray. Refer to Removal and Installation, Battery Tray in this section.

(4) Remove one nut retaining ground strap to left inner fender (Fig. 12).

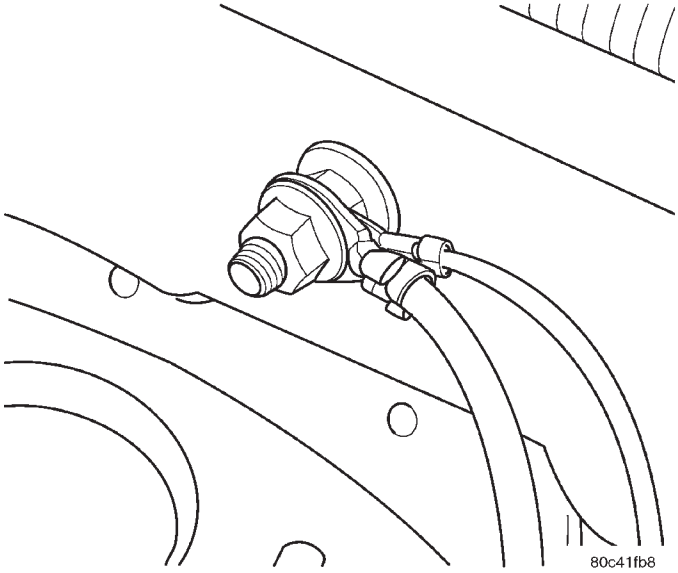

Fig. 12 Negative Battery Cable Ground Strap Connection

(5) Remove one negative battery cable retaining bolt at transmission.

(6) Remove negative battery cable from engine compartment and vehicle.

INSTALLATION

(1) Place negative battery cable into engine compartment.

(2) Install one negative battery cable retaining bolt at transmission.

(3) Install one nut retaining ground strap to left inner fender.

(4) Install Battery Tray. Refer to Removal and Installation, Battery Tray in this section.

(5) Install Battery. Refer to Removal and Installation, Battery in this section.

(6) Close hood.

(7) Verify operation of vehicle and systems.

REMOVAL AND INSTALLATION (Continued)

POSITIVE BATTERY CABLE

REMOVAL

(1) Set vehicle on hoist.
(2) Open hood.
(3) Remove Battery. Refer to Removal and Installation, Battery in this section.
(4) Remove Battery Tray. Refer to Removal and Installation, Battery Tray in this section.
(5) Remove Power Distribution Center (PDC) cover.
(6) Remove two 10 mm nuts retaining positive battery cable to PDC.
(7) Remove the tape retaining the positive battery cable to the plastic fastener near the transmission.
(8) Hoist vehicle.
(9) Remove one bolt holding transmission cooler line to structural support.
(10) Remove the positive battery cable to starter solenoid retaining nut.
(11) Remove positive battery cable from engine compartment and vehicle.

INSTALLATION

(1) Install positive battery cable into engine compartment.
(2) Install the positive battery cable to starter solenoid retaining nut.
(3) Install one bolt holding transmission cooler line to structural support.
(4) Lower vehicle.
(5) Install the tape retaining the positive battery cable to the plastic fastener near the transmission.
(6) Install two 10 mm nuts retaining positive battery cable to PDC.
(7) Install Power Distribution Center (PDC) cover.
(8) Install Battery Tray. Refer to Removal and Installation, Battery Tray in this section.
(9) Install Battery. Refer to Removal and Installation, Battery in this section.
(10) Close hood.
(11) Verify operation of vehicle and systems.
(12) Remove vehicle from hoist.

BATTERY HEATER

WARNING: TO PROTECT THE HANDS FROM BATTERY ACID, A SUITABLE PAIR OF HEAVY DUTY RUBBER GLOVES, NOT THE HOUSEHOLD TYPE, SHOULD BE WORN WHEN REMOVING OR SERVICING A BATTERY. SAFETY GLASSES ALSO SHOULD BE WORN.

REMOVAL

(1) Make sure ignition switch is in OFF position and all accessories are OFF.
(2) Open hood.
(3) Remove Air Cleaner Box. Refer to Fuel Delivery, Air Cleaner Box Removal and Installation.
(4) Disconnect and isolate the battery negative cable.
(5) Disconnect the battery positive cable.
(6) Loosen bolt and retainer that holds the battery down to the tray.
(7) Lift battery out of battery tray and remove from vehicle.
(8) Carefully lift the battery heater off over the battery taking care not to tear it.
(9) Remove the battery heater from battery.

INSTALLATION

When replacing battery, the battery heater (if equipped) MUST be transferred to the new battery.
(1) Slip the battery heater over the battery being careful not to tear it.
(2) Install battery in vehicle making sure that the battery heater is present and battery is properly positioned on battery tray.
(3) Install battery hold down clamp, making sure that it is properly positioned on battery.
(4) Connect battery cable clamps to battery posts. Install battery positive cable first.
(5) Tighten clamp nuts securely.
(6) Close hood.
(7) Verify operation of vehicle and systems.

BATTERY THERMOWRAP

WARNING: TO PROTECT THE HANDS FROM BATTERY ACID, A SUITABLE PAIR OF HEAVY DUTY RUBBER GLOVES, NOT THE HOUSEHOLD TYPE, SHOULD BE WORN WHEN REMOVING OR SERVICING A BATTERY. SAFETY GLASSES ALSO SHOULD BE WORN.

REMOVAL

(1) Make sure ignition switch is in OFF position and all accessories are OFF.
(2) Open hood.
(3) Remove Air Cleaner Box. Refer to Fuel Delivery, Air Cleaner Box Removal and Installation.
(4) Disconnect and isolate the battery negative cable.
(5) Disconnect the battery positive cable.
(6) Loosen bolt and retainer that holds the battery down to the tray.
(7) Lift battery out of battery tray and remove from vehicle.
(8) Carefully lift the thermowrap off over the battery (Fig. 13) taking care not to tear it.
(9) Remove the thermowrap from battery.

REMOVAL AND INSTALLATION (Continued)

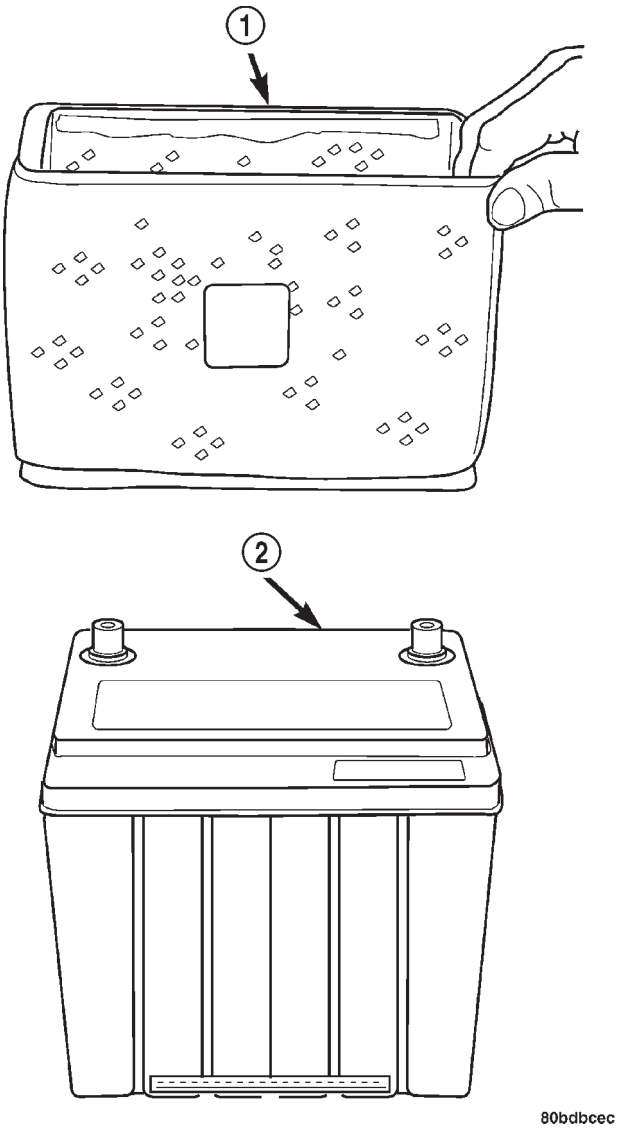

Fig. 13 Battery Thermowrap

1 – BATTERY THERMOWRAP
2 – BATTERY

INSTALLATION

When replacing battery, the Thermowrap MUST be transferred to the new battery.

(1) Slip the battery thermowrap over the battery being careful not to tear it.

(2) Install battery in vehicle making sure that the thermowrap is present and battery is properly positioned on battery tray.

(3) Install battery hold down clamp, making sure that it is properly positioned on battery.

(4) Connect battery cable clamps to battery posts. Install battery positive cable first.

(5) Tighten clamp nuts securely.

(6) Close hood.

(7) Verify operation of vehicle and systems.

BATTERY TRAY

REMOVAL

(1) Open hood.

(2) Remove the battery. Refer to Battery Removal and Installation in this section.

(3) Remove six bolts retaining the battery tray.

(4) Lift the battery tray out of the engine compartment and remove from the vehicle.

(5) Remove battery tray from vehicle.

INSTALLATION

(1) Place battery tray into place in the engine compartment.

(2) Install six bolts retaining the battery tray.

(3) Install the battery. Refer to Battery Removal and Installation in this section.

(4) Close hood.

(5) Verify operation of vehicle and systems.

CLEANING AND INSPECTION

BATTERY

CAUTION: Do not allow baking soda solution to enter vent holes, as damage to battery can result.

BATTERY CLEANING

(1) Clean top of battery with a solution of warm water and baking soda.

(2) Apply soda solution with a bristle brush and allow to soak until acid deposits loosen (Fig. 14).

(3) Rinse soda solution from battery with clear water and blot battery dry with paper toweling. Dispose of toweling in a safe manner. Refer to the WARNINGS on top of battery.

BATTERY INSPECTION

(1) Inspect battery case and cover for cracks, leakage or damaged hold down ledge. If battery is damaged replace it.

(2) Inspect battery tray for damage caused by acid from battery. If acid is present, clean area with baking soda solution.

(3) Clean battery posts with a battery post cleaning tool (Fig. 15).

(4) Clean battery cable clamps with a battery terminal cleaning tool (Fig. 16). Replace cables that are frayed or have broken clamps.

SPECIFICATIONS (Continued)

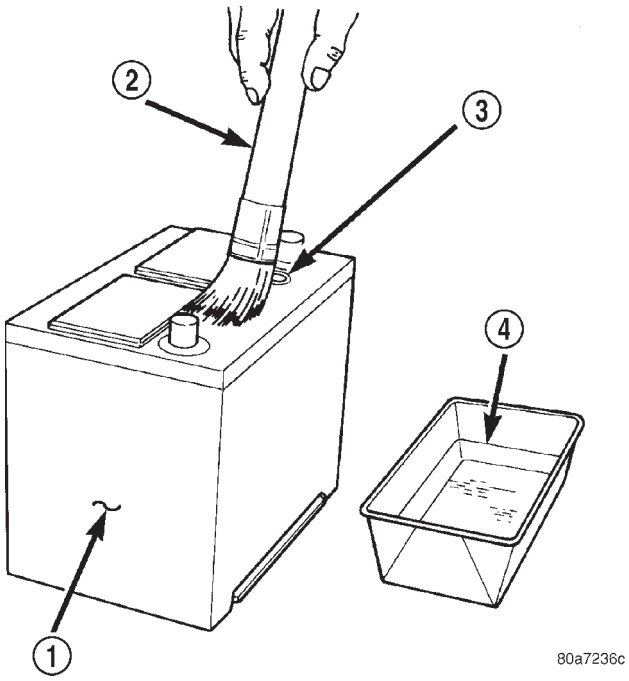

Fig. 14 Cleaning Battery - Typical

1 – BATTERY
2 – CLEANING BRUSH
3 – TEST INDICATOR
4 – WARM WATER AND BAKING SODA SOLUTION

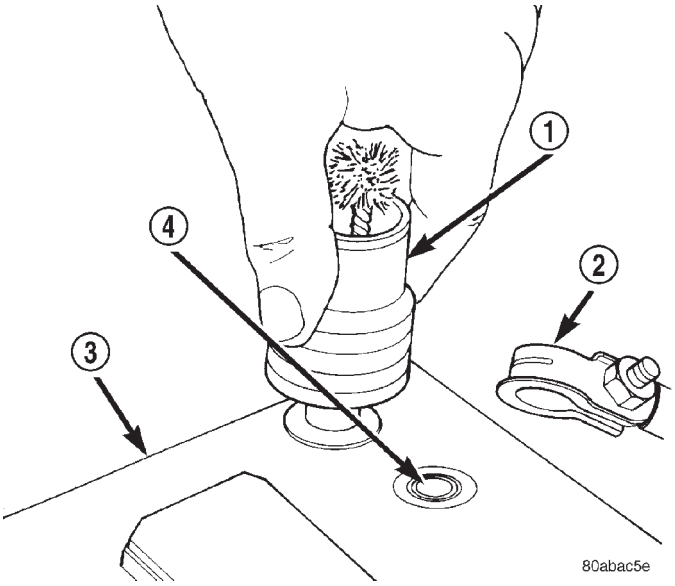

Fig. 15 Cleaning Battery Post - Typical

1 – BATTERY POST CLEANER
2 – BATTERY CABLE
3 – BATTERY
4 – TEST INDICATOR

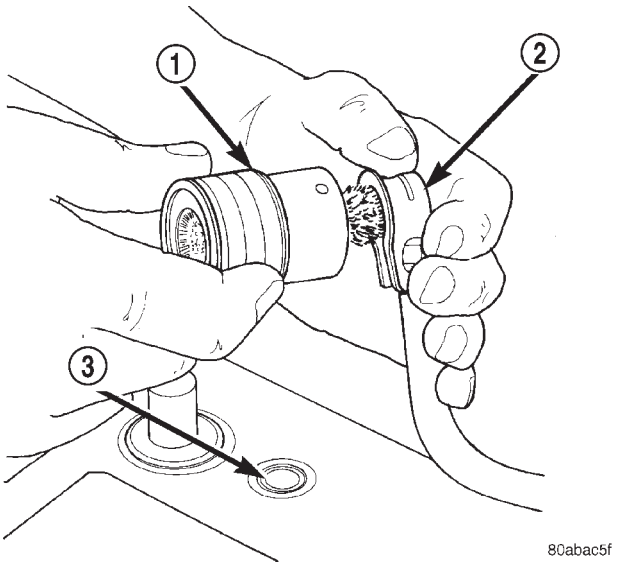

Fig. 16 Cleaning Battery Cable Terminal - Typical

1 – BATTERY CABLE CLEANER
2 – BATTERY CABLE
3 – TEST INDICATOR

SPECIFICATIONS

BATTERY SPECIFICATIONS

Load Test (Amps)	Cold Cranking Rating @ -18°C (0°F)	Reserve Capacity
225 Amp	450 Amp	85 Minutes

COLD CRANK RATING

The current battery can deliver for 30 seconds and maintain a terminal voltage of 7.2 volts or greater at –18° C (0° F).

RESERVE CAPACITY RATING

The length of time a battery can deliver 25 amps and maintain a minimum terminal voltage of 10.5 volts at 27°C (80°F).

TORQUE

DESCRIPTION	TORQUE
Battery Hold Down Bolt	110 ± 10 in. lbs.
Battery Tray Fasteners	105 ± 20 in. lbs.

STARTING SYSTEMS

TABLE OF CONTENTS

page

DESCRIPTION AND OPERATION
STARTING SYSTEM 1
STARTER MOTOR. 1
STARTER RELAY 1
FEED CIRCUIT AND CONTROL CIRCUIT 2
DIAGNOSIS AND TESTING
CONTROL CIRCUIT. 2
FEED CIRCUIT RESISTANCE 4
FEED CIRCUIT 4
STARTING SYSTEM 5
REMOVAL AND INSTALLATION
SAFETY SWITCHES 7
STARTER MOTOR. 7
STARTER RELAY 7
SPECIFICATIONS
STARTER MOTOR. 8
TORQUE 8

DESCRIPTION AND OPERATION

STARTING SYSTEM

DESCRIPTION

The starting system has:
- Ignition switch
- Starter relay
- Powertrain Control Module (PCM) for double start over ride
- Wiring harness
- Battery
- Starter motor with an integral solenoid

OPERATION

These components form two separate circuits. A high amperage circuit that feeds the starter motor up to 300+ amps, and a control circuit that operates on less than 20 amps.

The Powertrain Control Module (PCM) controls a double start over ride safety that does not allow the starter to be engaged if the engine is already running.

STARTER MOTOR

DESCRIPTION

The Starter Motor is a permanent magnet starter motor. It uses an integral non-servicable solenoid. It is attached to the front side of the engine bolted to the bell housing.

OPERATION

When the starter relay is energized, the solenoid contacts close. A planetary gear train transmits power between starter motor and pinion shaft. The fields have permanent magnets.

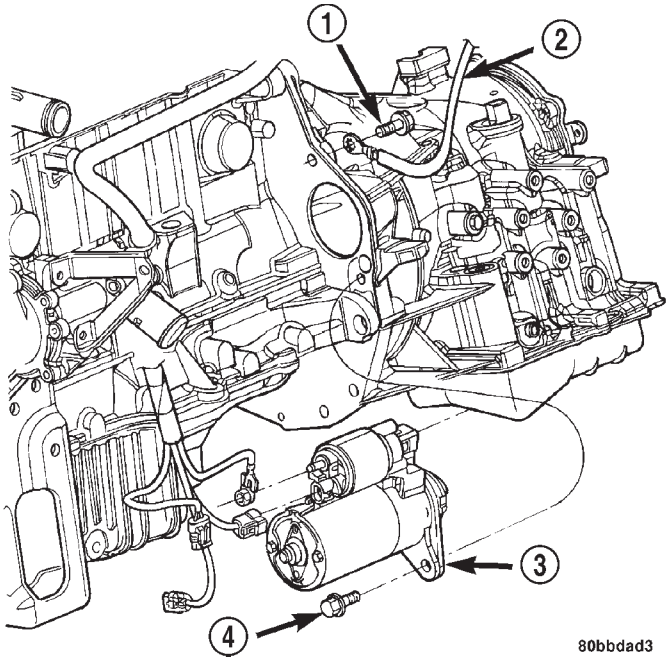

Fig. 1 Starter Location

1 – BOLT
2 – GROUND
3 – STARTER
4 – BOLT

STARTER RELAY

DESCRIPTION

The Starter Relay is a micro relay located in the Power Distribution Center (PDC), positioned in the left side of the engine compartment.

DESCRIPTION AND OPERATION (Continued)

OPERATION

As battery power is applied to the relay from the ignition switch, battery power is applied to the starter motor through the relay to the starter solenoid.

The starter relay ground is provided by the PCM. When the park/neutral switch contacts are closed, indicating Park or Neutral, the PCM will supply the ground path for the starter relay at key ON. This will occur if the engine RPM is below a predetermined value.

FEED CIRCUIT AND CONTROL CIRCUIT

DESCRIPTION

The Starting System has:

- Ignition Switch
- Starter Relay
- Park/Neutral Starting Back/Up Lamp Switch (automatic)
- Clutch Interlock/Upstop Switch (manual)
- Powertrain Control Module (PCM) for Double Start Override
- Wiring Harness
- Battery
- Starter Motor with an integral solenoid

OPERATION

These components form two separate circuits. A high amperage **Feed Circuit** that feeds the starter motor up to 300+ amps, and a **Control Circuit** that operates on less than 20 amps.

The PCM controls a double start override safety that does not allow the starter to be engaged if the engine is already running (above 200 rpm).

DIAGNOSIS AND TESTING

CONTROL CIRCUIT

The starting system control circuit has:

- Starter solenoid
- Starter relay
- Park/Neutral Starting and Back-Up Lamp Switch with automatic transmissions
- Clutch Interlock/Upstop Switch with manual transmissions
- Ignition switch
- Battery
- All related wiring and connections
- Double Start Override algorithm located in the PCM

WARNING: BEFORE PERFORMING ANY STARTER TESTS, THE IGNITION AND FUEL SYSTEMS MUST BE DISABLED.

- To disable the ignition and fuel systems, disconnect the Automatic Shutdown Relay (ASD). The ASD relay is located in the in the Power Distribution Center (PDC). Refer to the PDC cover for the proper relay location.

STARTER SOLENOID

WARNING: CHECK TO ENSURE THAT THE TRANSMISSION IS IN THE PARK POSITION WITH THE PARKING BRAKE APPLIED

(1) Verify battery condition. Battery must be in good condition with a full charge before performing any starter tests. Refer to Battery, Diagnosis and Testing, Battery Open Circuit Voltage tests.

(2) Perform Starter Solenoid test BEFORE performing the starter relay test.

(3) Raise the vehicle.

(4) Perform a visual inspection of the starter/starter solenoid for corrosion, loose connections or faulty wiring.

(5) Lower the vehicle.

(6) Locate and remove the starter relay from the Power Distribution Center (PDC). Refer to the PDC label for relay identification and location.

(7) Connect a starter switch or a jumper wire between the remote battery positive post and terminal 87 of the starter relay connector.

(a) If engine cranks, starter motor and starter solenoid is good. Go to the Starter Relay Test.

(b) If engine does not crank or solenoid chatters, check wiring and connectors from starter relay to starter solenoid for loose or corroded connections. Check for corroded connections at starter terminals.

(c) Repeat test. If engine still fails to crank properly, trouble is within starter or starter mounted solenoid, and replace starter.

STARTER RELAY

WARNING: CHECK TO ENSURE THAT THE TRANSMISSION IS IN THE PARK POSITION WITH THE PARKING BRAKE APPLIED.

RELAY TEST

The starter relay is located in the Power Distribution Center (PDC) in the engine compartment. Refer to the PDC label for relay identification and location. Use the Starter Relay Pin Call-Out table and (Fig. 2) for relay testing.

Remove the starter relay from the PDC as described in this group to perform the following tests:

(1) A relay in the de-energized position should have continuity between terminals 87A and 30, and

DIAGNOSIS AND TESTING (Continued)

no continuity between terminals 87 and 30. If OK, go to Step 2. If not OK, replace the faulty relay.

(2) Resistance between terminals 85 and 86 (electromagnet) should be 75 ±5 ohms. If OK, go to Step 3. If not OK, replace the faulty relay.

(3) Connect a battery B+ lead to terminals 86 and a ground lead to terminal 85 to energize the relay. The relay should click. Test for continuity between terminals 30 and 87, and no continuity between terminals 87A and 30. If OK, refer to Relay Circuit Test procedure. If not OK, replace the faulty relay.

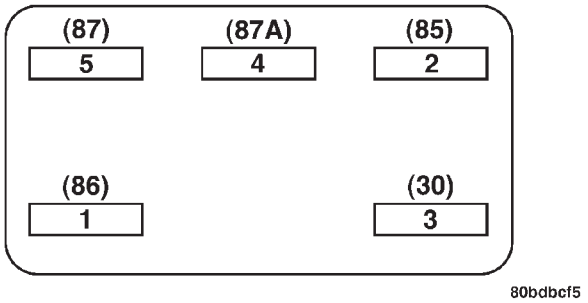

Fig. 2 Starter Relay

STARTER RELAY PIN CALL-OUT

PIN	CIRCUIT	COLOR	DESCRIPTION
1 (86)	A041	YL	IGNITION SWITCH OUTPUT (START)
2 (85)	K090	TN	PCM
3 (30)	A001	RD	FUSED B+
4 (87A)			NOT USED
5 (87)	T040	BR	STARTER SOLENOID

RELAY CIRCUIT TEST

(1) The relay common feed terminal cavity (30) is connected to battery voltage and should be hot at all times. If OK, go to Step 2. If not OK, repair the open circuit to the PDC fuse as required.

(2) The relay normally closed terminal (87A) is connected to terminal 30 in the de-energized position, but is not used for this application. Go to Step 3.

(3) The relay normally open terminal (87) is connected to the common feed terminal (30) in the energized position. This terminal supplies battery voltage to the starter solenoid field coils. There should be continuity between the cavity for relay terminal 87 and the starter solenoid terminal at all times. If OK, go to Step 4. If not OK, repair the open circuit to the starter solenoid as required.

(4) The coil battery terminal (86) is connected to the electromagnet in the relay. It is energized when the ignition switch is held in the START position. Check for battery voltage at the cavity for relay terminal 86 with the ignition switch in the START position, and no voltage when the ignition switch is released to the ON position. If OK, go to Step 5. If not OK, check for an open or short circuit to the ignition switch and repair, if required. If the circuit to the ignition switch is OK, see the Ignition Switch Test procedure in this group.

(5) The coil ground terminal (85) is connected to the electromagnet in the relay. It is grounded by the PCM only when the engine is not running and the gearshift selector lever is in the PARK or NEUTRAL positions (ATX) or the clutch pedal is depressed (MTX). Check for continuity between the relay cavity (85) and PCM connector cavity (31), repair if required.

(6) The PCM cavity (76) detects the closure of either the PARK, NEUTRAL, or CLUTCH INTERLOCK SWITCH. Check continuity between PCM cavity (76) and ground with activation of the appropriate switch or refer to Transaxle, Removal and Installation, Park/Neutral Starting and Back-Up Lamp Switch.

SAFETY SWITCHES

For diagnosis of:

- Clutch Interlock/Upstop Switch, refer to Clutch, Diagnosis and Testing.
- Park/Neutral Starting and Back-Up Lamp Switch, refer to Transaxle, Removal and Installation. Testing is located within the Removal and Installation procedures.

IGNITION SWITCH

After testing starter solenoid and relay, test ignition switch and wiring. Check all wiring for opens or shorts, and all connectors for being loose or corroded. Refer to Ignition Systems and Wiring Diagrams.

DIAGNOSIS AND TESTING (Continued)

BATTERY

Refer to Battery for Diagnosis and Testing of the battery.

ALL RELATED WIRING AND CONNECTORS

Refer to Wiring Diagrams.

FEED CIRCUIT RESISTANCE

Before proceeding with this operation, review Diagnosis and Testing, Starting System and Feed Circuit tests within this section.

The following operation will require a voltmeter, accurate to 1/10 of a volt.

CAUTION: The IGNITION and FUEL SYSTEMS must be disabled to prevent the engine from starting while performing the following tests.

(1) To disable the ignition and fuel systems, disconnect the Automatic Shutdown (ASD) Relay. The ASD relay is located in the Power Distribution Center (PDC). Refer to the PDC cover for proper relay location.

(2) With all wiring harnesses and components properly connected, perform the following:

(a) Connect the negative lead of the voltmeter to the battery negative post, and positive lead to the battery negative cable clamp. Rotate and hold the ignition switch in the START position. Observe the voltmeter. If voltage is detected, correct poor contact between cable clamp and post.

(b) Connect positive lead of the voltmeter to the battery positive post, and negative lead to the battery positive cable clamp. Rotate and hold the ignition switch key in the START position. Observe the voltmeter. If voltage is detected, correct poor contact between the cable clamp and post.

(c) Connect negative lead of voltmeter to battery negative terminal, and positive lead to engine block near the battery cable attaching point. Rotate and hold the ignition switch in the START position. If voltage reads above 0.2 volt, correct poor contact at ground cable attaching point. If voltage reading is still above 0.2 volt after correcting poor contacts, replace ground cable.

(3) Connect positive voltmeter lead to the starter motor housing and the negative lead to the battery negative terminal. Hold the ignition switch key in the START position. If voltage reads above 0.2 volt, correct poor starter to engine ground.

(a) Connect the positive voltmeter lead to the battery positive terminal, and negative lead to battery cable terminal on starter solenoid. Rotate and hold the ignition switch in the START position. If voltage reads above 0.2 volt, correct poor contact at battery cable to solenoid connection. If reading is still above 0.2 volt after correcting poor contacts, replace battery positive cable.

(b) If resistance tests do not detect feed circuit failures, replace the starter motor.

FEED CIRCUIT

The following procedure will require a suitable volt-ampere tester (Fig. 3).

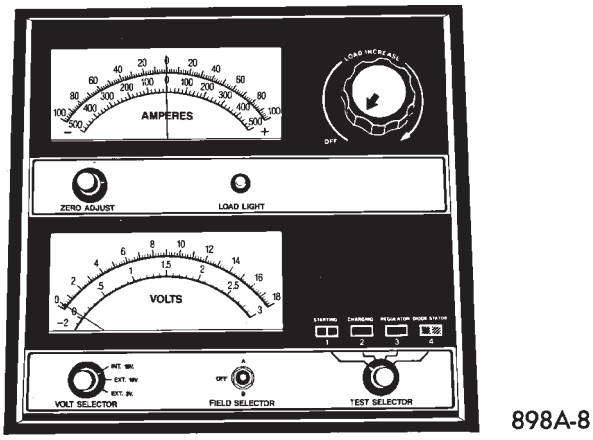

Fig. 3 Volt Ampere Tester - Typical

WARNING: BEFORE PERFORMING ANY STARTER MOTOR TESTS, THE IGNITION AND FUEL SYSTEMS MUST BE DISABLED TO PREVENT THE ENGINE FROM STARTING WHILE PERFORMING THE FOLLOWING TESTS.

(1) Connect a volt-ampere tester to the battery terminals (Fig. 4). Refer to the operating instructions provided with the tester being used.

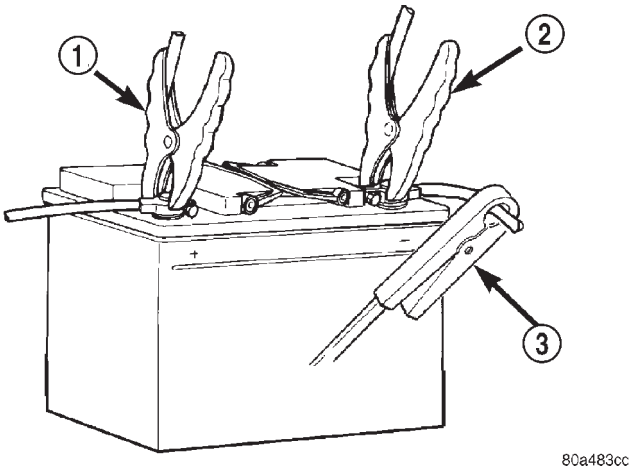

Fig. 4 Volt-Ampere Tester Connections - Typical

1 – POSITIVE CLAMP
2 – NEGATIVE CLAMP
3 – INDUCTION AMMETER CLAMP

(2) To disable the ignition and fuel systems, disconnect the Automatic Shutdown (ASD) Relay. The

DIAGNOSIS AND TESTING (Continued)

ASD relay is located in the Power Distribution Center (PDC). Refer to the PDC cover for proper relay location.

(3) Verify that all lights and accessories are OFF, and the transmission shift selector is in the PARK position or with the clutch pedal depressed and SET parking brake.

WARNING: DO NOT OVERHEAT THE STARTER MOTOR OR DRAW THE BATTERY VOLTAGE BELOW 9.6 VOLTS DURING CRANKING OPERATIONS. DAMAGE TO BATTERY AND STARTING SYSTEM WILL OCCUR.

(4) Rotate and hold the ignition switch in the START position. Observe the volt-ampere tester (Fig. 3).

- If voltage reads above 9.6 volts, and amperage draw reads above 280 amps (warm engine), check for engine seizing or faulty starter.
- If voltage reads 12.4 volts or greater and amperage reads 0 to 10 amps, check for corroded cables and/or bad connections.
- If voltage is below 9.6 volts and amperage draw is above 300 amps, the problem is the starter motor. Replace the starter. Refer to Removal and Installation, Starter Motor in this section.

(5) After the starting system problems have been corrected, verify the battery state-of-charge and charge battery if necessary. Disconnect all testing equipment and connect the ASD relay. Start the vehicle several times to assure the problem has been corrected.

STARTING SYSTEM

For circuit descriptions and diagrams, refer to Starting System in Wiring Diagrams.

WARNING: ON VEHICLES EQUIPPED WITH AIRBAGS, REFER TO RESTRAINT SYSTEMS BEFORE ATTEMPTING STEERING WHEEL, STEERING COLUMN, OR INSTRUMENT PANEL COMPONENT DIAGNOSIS OR SERVICE. FAILURE TO TAKE THE PROPER PRECAUTIONS COULD RESULT IN ACCIDENTAL AIRBAG DEPLOYMENT AND POSSIBLE PERSONAL INJURY.

INSPECTION

Before removing any unit from the starting system for repair or diagnosis, perform the following inspections:

- **Battery** - Visually inspect the battery for indications of physical damage and loose or corroded cable connections. Determine the state-of-charge and cranking capacity of the battery. Charge or replace the battery, if required. Refer to Battery for more information.
- **Ignition Switch** - Visually inspect the ignition switch for indications of physical damage and loose or corroded wire harness connections.
- **Clutch Interlock/Upstop Switch** - Visually inspect the clutch interlock/upstop switch for indications of physical damage and loose or corroded wire harness connections.
- **Park/Neutral Starting and Back-Up Lamp Switch** - Visually inspect the park/neutral starting and back-up lamp switch for indications of physical damage and loose or corroded wire harness connections.
- **Starter Relay** - Visually inspect the starter relay for indications of physical damage and loose or corroded wire harness connections.
- **Starter Motor** - Visually inspect the starter motor for indications of physical damage and loose or corroded wire harness connections.
- **Starter Solenoid** - Visually inspect the starter solenoid for indications of physical damage and loose or corroded wire harness connections.
- **Wiring** - Visually inspect the wire harness for damage. Repair or replace any faulty wiring, as required.

DIAGNOSIS AND TESTING (Continued)

STARTING SYSTEM DIAGNOSIS

CONDITION	POSSIBLE CAUSE	CORRECTION
STARTER FAILS TO ENGAGE.	1. BATTERY DISCHARGED OR FAULTY. 2. STARTING CIRCUIT WIRING FAULTY. 3. STARTER RELAY FAULTY. 4. IGNITION SWITCH FAULTY. 5. PARK/NEUTRAL STARTING AND BACK-UP LAMP SWITCH (AUTO TRANS) FAULTY OR MIS-ADJUSTED. 6. CLUTCH INTERLOCK/UPSTOP SWITCH (MAN TRANS) FAULTY. 7. STARTER SOLENOID FAULTY. 8. STARTER MOTOR FAULTY.	1. REFER TO BATTERY. CHARGE OR REPLACE BATTERY, IF REQUIRED. 2. REFER TO FEED CIRCUIT RESISTANCE TEST AND FEED CIRCUIT TEST IN THIS SECTION. 3. REFER TO RELAY TEST, IN THIS SECTION. REPLACE RELAY, IF NECESSARY. 4. REFER TO IGNITION SWITCH TEST, IN IGNITION SYSTEM OR WIRING DIAGRAMS. REPLACE SWITCH, IF NECESSARY. 5. REFER PARK/NEUTRAL STARTING AND BACK-UP LAMP SWITCH TEST IN TRANSAXLE. REPLACE SWITCH, IF NECESSARY. 6. REFER TO CLUTCH INTERLOCK/UPSTOP SWITCH TEST, IN CLUTCH (LOCATED WITHIN THE SWITCH REMOVAL AND INSTALLATION). REPLACE SWITCH, IF NECESSARY. 7. REFER TO DIAGNOSIS AND TESTING, CONTROL CIRCUIT TEST, IN THIS SECTION. REPLACE STARTER MOTOR, IF NECESSARY. 8. IF ALL OTHER STARTING SYSTEM COMPONENTS AND CIRCUITS CHECK OK, REPLACE STARTER MOTOR.
STARTER ENGAGES, FAILS TO TURN ENGINE.	1. BATTERY DISCHARGED OR FAULTY. 2. STARTING CIRCUIT WIRING FAULTY. 3. STARTER MOTOR FAULTY. 4. ENGINE SEIZED.	1. REFER TO BATTERY. CHARGE OR REPLACE BATTERY AS NECESSARY. 2. REFER TO THE FEED CIRCUIT RESISTANCE TEST AND THE FEED CIRCUIT TEST IN THIS SECTION. REPAIR AS NECESSARY. 3. IF ALL OTHER STARTING SYSTEM COMPONENTS AND CIRCUITS CHECK OK, REPLACE STARTER MOTOR. 4. REFER TO ENGINE, FOR DIAGNOSTIC AND SERVICE PROCEDURES.
STARTER ENGAGES, SPINS OUT BEFORE ENGINE STARTS.	1. BROKEN TEETH ON STARTER RING GEAR. 2. STARTER MOTOR FAULTY.	1. REMOVE STARTER MOTOR. INSPECT RING GEAR AND REPLACE IF NECESSARY. 2. IF ALL OTHER STARTING SYSTEM COMPONENTS AND CIRCUITS CHECK OK, REPLACE STARTER MOTOR.
STARTER DOES NOT DISENGAGE.	1. STARTER IMPROPERLY INSTALLED. 2. STARTER RELAY FAULTY. 3. IGNITION SWITCH FAULTY. 4. STARTER MOTOR FAULTY.	1. INSTALL STARTER. TIGHTEN STARTER MOUNTING HARDWARE TO CORRECT TORQUE SPECIFICATIONS. 2. REFER TO DIAGNOSIS AND TESTING, CONTROL CIRCUIT TEST IN THIS SECTION. REPLACE RELAY, IF NECESSARY. 3. REFER TO IGNITION SWITCH TEST, IN IGNITION SYSTEM. REPLACE SWITCH, IF NECESSARY. 4. IF ALL OTHER STARTING SYSTEM COMPONENTS AND CIRCUITS CHECK OK, REPLACE STARTER MOTOR.

REMOVAL AND INSTALLATION

SAFETY SWITCHES

For Removal and Installation of the:

- Clutch Interlock/Upstop Switch, refer to Clutch, Removal and Installation.
- Park/Neutral Starting and Back-Up Lamp Switch, refer to Transaxle, Removal and Installation.

STARTER MOTOR

REMOVAL

(1) Open Hood.

(2) Remove air cleaner box cover. Refer to Fuel Delivery, Removal and Installation, Air Cleaner Box.

(3) Disconnect and isolate the battery negative cable (Fig. 5).

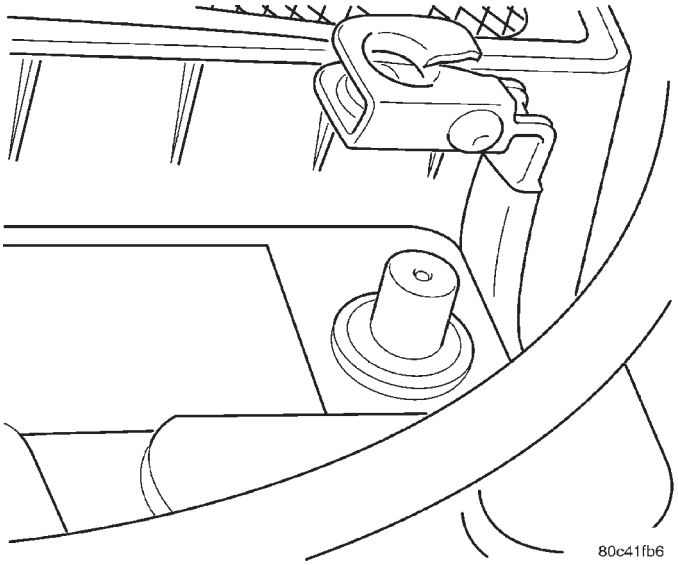

Fig. 5 Battery Negative Cable Remove/Install

(4) Raise vehicle on hoist.

(5) Remove Engine Structural Collar. Refer to Engine, Structural Collar Removal and Installation.

(6) Disconnect starter motor wiring (Fig. 6).

(7) Remove starter motor mounting bolts (Fig. 6).

(8) Remove starter motor from vehicle.

INSTALLATION

(1) Reinstall starter motor into vehicle lower engine compartment.

(2) Install starter motor mounting bolts and torque to 54 N·m (40 ft. lbs.).

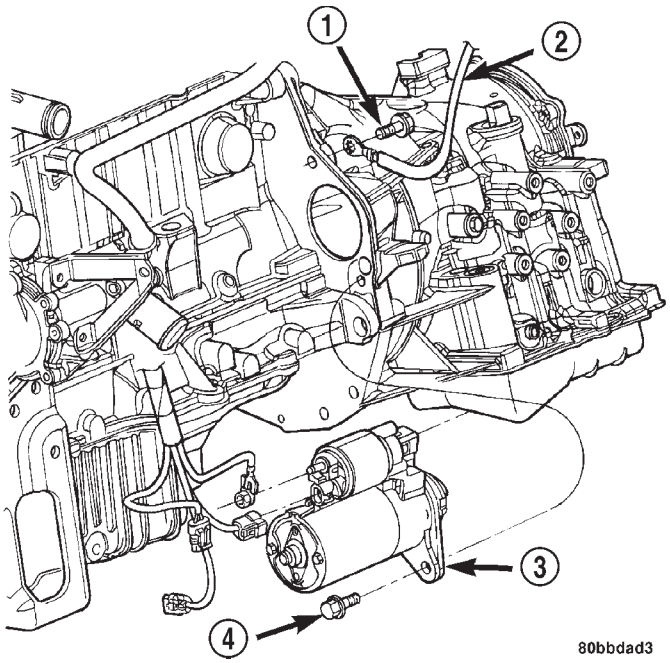

Fig. 6 Starter Remove/Install

1 – BOLT
2 – GROUND
3 – STARTER
4 – BOLT

(3) Connect starter motor wiring. Torque solenoid battery cable nut to 10 N·m (90 in. lbs.).

(4) Install Engine Structural Collar. Refer to Engine, Structural Collar Removal and Installation.

CAUTION: The torque procedure for the structural collar must be followed, as damage to the oil pan or collar could occur.

(5) Lower vehicle from hoist.

(6) Reconnect battery negative cable.

(7) Reinstall air cleaner box cover.

(8) Verify operation of vehicle and systems.

(9) Close hood and remove from hoist.

STARTER RELAY

The relay is located in the Power Distribution Center (PDC). Refer to the PDC cover for relay location.

SPECIFICATIONS

STARTER MOTOR

ENGINE APPLICATION	2.4L DOHC
POWER RATING	1.2 KW
VOLTAGE	12 VOLTS
NUMBER OF FIELDS	6
NUMBER OF POLES	6
BRUSHES	4
DRIVE	PLANETARY GEAR TRAIN
CRANKING AMPERAGE DRAW TEST	150 - 280 AMPS.

NOTE: Engine should be up to operating temperature. Extremely heavy oil or tight engine will increase starter amperage draw.

TORQUE

DESCRIPTION	TORQUE
Starter Mounting Bolts	54 N·m (40 ft. lbs.)
Starter Solenoid Battery Nut . .	10 N·m (90 in. lbs.)

CHARGING SYSTEM

TABLE OF CONTENTS

page

DESCRIPTION AND OPERATION
CHARGING SYSTEM 1
GENERATOR 1
BATTERY TEMPERATURE SENSOR 1
ELECTRONIC VOLTAGE REGULATOR 2
ON-BOARD DIAGNOSTIC SYSTEM 2

page

REMOVAL AND INSTALLATION
GENERATOR-2.4 L 3
SPECIFICATIONS
GENERATOR RATINGS 5
TORQUE 5

DESCRIPTION AND OPERATION

CHARGING SYSTEM

DESCRIPTION

The charging system consists of:

- Generator
- Electronic Voltage Regulator (EVR) circuitry within the Powertrain Control Module (PCM)
- Ignition switch (refer to the Ignition System for information)
- Battery (refer to the Battery for information)
- Battery temperature sensor
- Wiring harness and connections (refer to the Wiring for information)

OPERATION

The charging system is turned on and off with the ignition switch. When the ignition switch is turned to the ON position, battery voltage is applied to the generator rotor through one of the two field terminals to produce a magnetic field. The generator is driven by the engine through a serpentine belt and pulley arrangement.

The amount of DC current produced by the generator is controlled by the EVR (field control) circuitry, contained within the PCM. This circuitry is connected in series with the second rotor field terminal and ground.

Temperature data, along with data from monitored line voltage, is used by the PCM to vary the battery charging rate. This is done by cycling the ground path to control the strength of the rotor magnetic field. The PCM then compensates and regulates generator current output accordingly and to maintain the proper voltage depending on battery temperature.

All vehicles are equipped with On-Board Diagnostics (OBD). All OBD-sensed systems, including the EVR (field control) circuitry, are monitored by the PCM. Each monitored circuit is assigned a Diagnostic Trouble Code (DTC). The PCM will store a DTC in electronic memory for any failure it detects.

GENERATOR

DESCRIPTION

The generator is belt-driven by the engine. It is serviced only as a complete assembly. If the generator fails for any reason, the entire assembly must be replaced. The generator produces DC voltage.

OPERATION

As the energized rotor begins to rotate within the generator, the spinning magnetic field induces a current into the windings of the stator coil. Once the generator begins producing sufficient current, it also provides the current needed to energize the rotor.

The Y type stator 3 phase winding connections deliver the induced AC current to 3 positive and 3 negative diodes for rectification. From the diodes, rectified DC current is delivered to the vehicles electrical system through the generator's, battery, and ground connections.

Noise emitting from the generator may be caused by:

- Worn, loose or defective bearings
- Loose or defective drive pulley
- Incorrect, worn, damaged or misadjusted drive belt
- Loose mounting bolts
- Misaligned drive pulley
- Defective stator or diode
- Damaged internal fins
- Loose generator casting bolts

BATTERY TEMPERATURE SENSOR

DESCRIPTION

The IAT (Inlet Air Temperature) sensor attaches to the intake air duct (Fig. 1).

DESCRIPTION AND OPERATION (Continued)

The IAT Sensor is a Negative Temperature Coefficient (NTC) Sensor that provides information to the PCM regarding the temperature of the air entering the intake manifold.

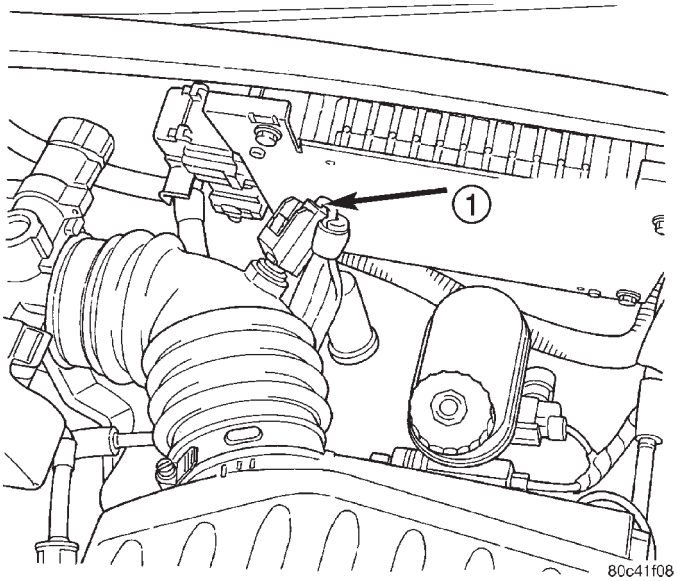

Fig. 1 Inlet Air Temperature Sensor

1 – INLET AIR TEMPERATURE SENSOR

OPERATION

Inlet/Intake Air Temperature

The inlet air temperature sensor replaces the intake air temperature sensor and the battery temperature sensor. The PCM uses the information from the inlet air temperature sensor along with other stored parameters to determine values to use as an intake air temperature and a battery temperature. The IAT sensor value is used by the PCM to determine air density.

The PCM uses this information to calculate:

- Injector pulse width
- Adjustment of ignition timing (to prevent spark knock at high intake air temperatures)

Battery Temperature

The battery temperature information along with data from monitored line voltage (B+), is used by the PCM to vary the battery charging rate. System voltage will be higher at colder temperatures and is gradually reduced at warmer temperatures.

The battery temperature information is also used for OBD II diagnostics. Certain faults and OBD II monitors are either enabled or disabled depending upon the battery temperature sensor input (example: disable purge, enable LDP). Most OBD II monitors are disabled below 20°F.

ELECTRONIC VOLTAGE REGULATOR

DESCRIPTION

The Electronic Voltage Regulator (EVR) is not a separate component. It is actually a voltage regulating circuit located within the Powertrain Control Module (PCM). The EVR is not serviced separately. If replacement is necessary, the PCM must be replaced.

OPERATION

The amount of direct current produced by the generator is controlled by EVR circuitry contained within the PCM. This circuitry is connected in series with the generators second rotor field terminal and its ground.

Voltage is regulated by cycling the ground path to control the strength of the rotor magnetic field. The EVR circuitry monitors system line voltage (B+) and battery temperature (Inlet/intake air temperature sensor for more information). It then determines a target charging voltage. If sensed battery voltage is 0.5 volts or lower than the target voltage, the PCM grounds the field winding until sensed battery voltage is 0.5 volts above target voltage. A circuit in the PCM cycles the ground side of the generator field up to 100 times per second (100Hz), but has the capability to ground the field control wire 100% of the time (full field) to achieve the target voltage. If the charging rate cannot be monitored (limp-in), a duty cycle of 25% is used by the PCM in order to have some generator output. Also refer to Charging System Operation for additional information.

ON-BOARD DIAGNOSTIC SYSTEM

OPERATION

GENERAL INFORMATION

The Powertrain Control Module (PCM) monitors critical input and output circuits of the charging system, making sure they are operational. A Diagnostic Trouble Code (DTC) is assigned to each input and output circuit monitored by the OBD system. Some circuits are checked continuously and some are checked only under certain conditions.

If the OBD system senses that a monitored circuit is bad, it will put a DTC into electronic memory. The DTC will stay in electronic memory as long as the circuit continues to be bad. The PCM is programmed to clear the memory after 50 engine starts if the problem does not occur again.

DIAGNOSTIC TROUBLE CODES

A DTC description can be read using the DRB scan tool. Refer to the appropriate Powertrain Diagnostic Procedures manual for information.

DESCRIPTION AND OPERATION (Continued)

A DTC does not identify which component in a circuit is bad. Thus, a DTC should be treated as a symptom, not as the cause for the problem. In some cases, because of the design of the diagnostic test procedure, a DTC can be the reason for another DTC to be set. Therefore, it is important that the test procedures be followed in sequence, to understand what caused a DTC to be set.

ERASING DIAGNOSTIC TROUBLE CODES

The DRB Scan Tool must be used to erase a DTC.

REMOVAL AND INSTALLATION

GENERATOR-2.4 L

REMOVAL

(1) Remove the air cleaner lid, disconnect the inlet air sensor and makeup air hose.

(2) Disconnect the negative battery cable.

(3) Loosen the upper generator adjustment lock nut (Fig. 2).

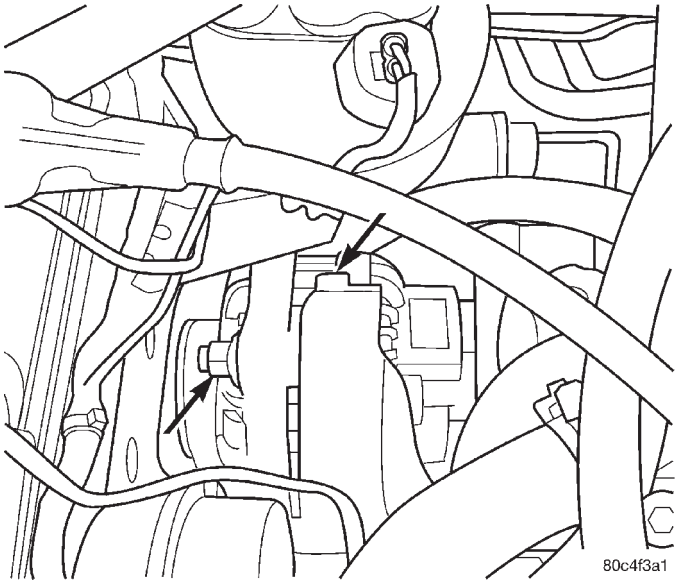

Fig. 2 Generator T-Bolt and Upper Pivot Bolt

(4) Raise vehicle on hoist.

(5) Remove the right front wheel.

(6) Remove the accessory drive splash shield (Fig. 3).

(7) Remove the support bracket (Fig. 4).

(8) Loosen the lower pivot bolt (Fig. 5).

(9) Loosen the accessory drive belt t-bolt.

(10) Unplug field circuit from generator (Fig. 5).

(11) Remove the B+ terminal nut and wire.

(12) Remove the generator belt, refer to the Cooling section for more information.

(13) Remove the axle retaining nut.

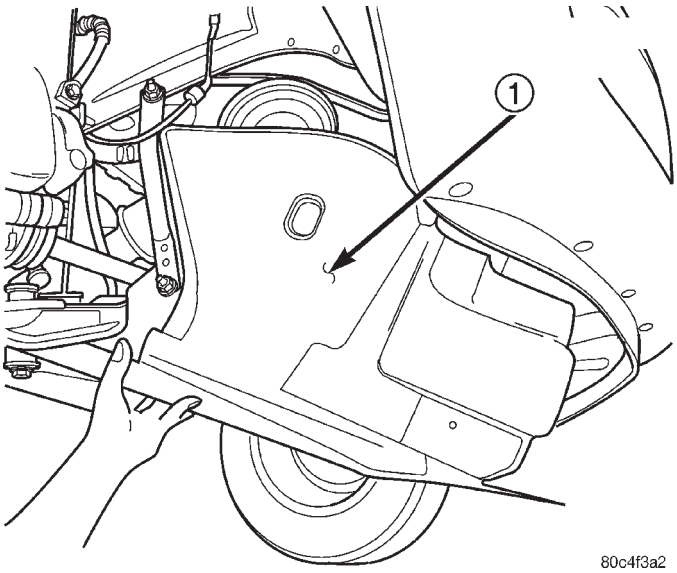

Fig. 3 Accessory Drive Splash Shield

1 – ACCESSORY DRIVE BELT SPLASH SHIELD

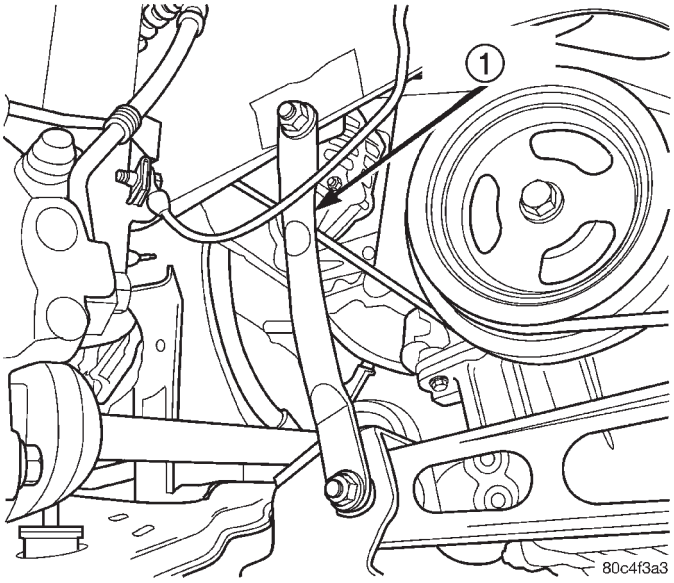

Fig. 4 Support Bracket

1 – SUPPORT BRACKET

(14) Remove the lower control arm from steering knuckle.

(15) Remove axle shaft. Put a container under the transmission to catch the transmission fluid from the transmission.

(16) Remove the generator lower mounting bolt and nut from the upper adjustment bracket.

(17) Remove generator out the bottom (Fig. 7).

INSTALLATION

(1) Install generator (Fig. 7) and loose assemble the bolt and nut (Fig. 5).

REMOVAL AND INSTALLATION (Continued)

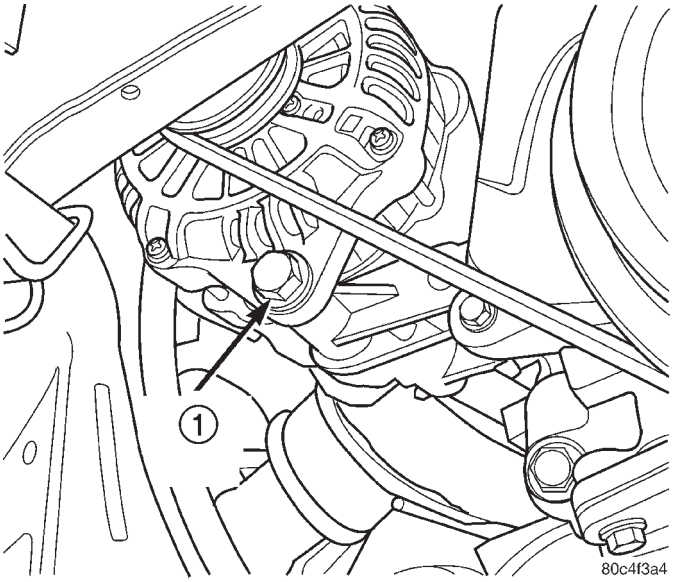

Fig. 5 Lower Pivot Bolt

1 – LOWER PIVOT BOLT

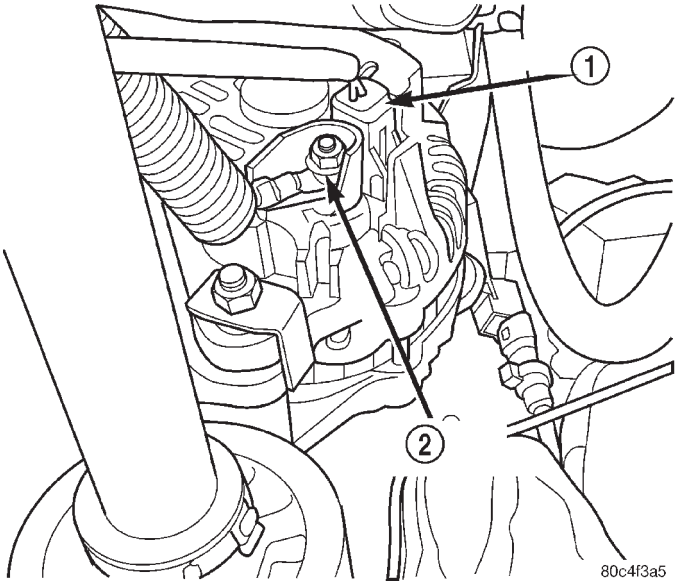

Fig. 6 Battery Connection

1 – FIELD CONNECTOR
2 – BATTERY CONNECTION

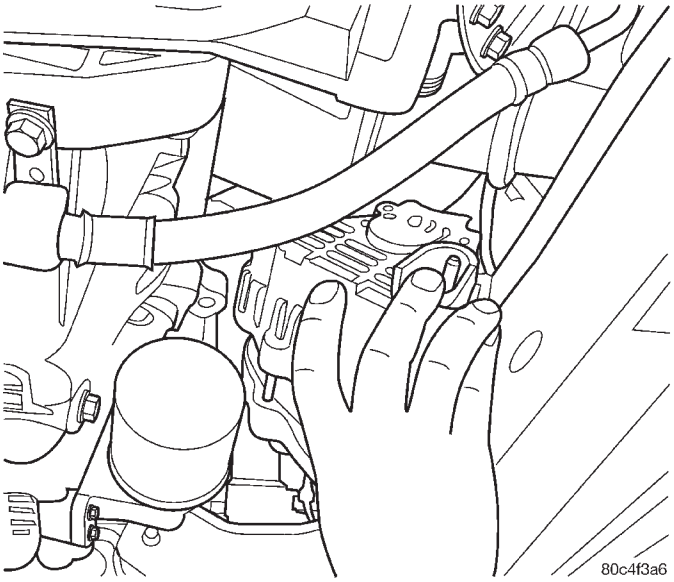

Fig. 7 Generator Removal

(2) Install the generator belt, refer to the Cooling section for more information.

(3) Install axle shaft, refer to the Axle section

(4) Install lower control arm to steering knuckle, refer to the Supension section.

(5) Install the lower ball joint nut and tighten

(6) Install the axle retaining nut and tighten, refer to the Axle section

(7) Install the support bracket (Fig. 4), refer to the body section.

(8) Install the B+ terminal nut and wire and tighten (Fig. 5) to 11.3 N·m (100 ins. lbs.).

(9) Plug in the field circuit to the generator

(10) Install the accessory drive splash shield (Fig. 3).

(11) Install the right front wheel.

(12) Lower vehicle.

(13) Tighten the upper pivot nut (Fig. 2) and tighten to 54 N·m (40 ft. lbs.)

(14) Connect the negative battery cable.

(15) Install the air cleaner lid and connect the inlet air temperature sensor and makeup hose.

(16) Check the transmission fluid.

SPECIFICATIONS

GENERATOR RATINGS

TYPE	ENGINES	MINIMUM TEST AMPS
MELCO	2.4L	120 amps
The Test Specifications are: 1. 2500 ±20 RPM 2. Voltage Output 15V ±.3V 3. Field Current 5amps ±.1amp		

TORQUE

DESCRIPTION	TORQUE
Battery Terminal Nut	10 N·m (90 in. lbs.)
Battery Hold Down Clamp Bolt	10 N·m (90 in. lbs.)
Generator B+ Terminal	11.3 N·m (100 in. lbs.)
Generator Upper T-bolt Bolt Nut	54 N·m (40 ft. lbs.)
Generator Lower Pivot Bolt	54 N·m (40 ft. lbs.)

IGNITION SYSTEM

TABLE OF CONTENTS

page

DESCRIPTION AND OPERATION
IGNITION SYSTEM 1
SPARK PLUGS 1
SPARK PLUG CABLES 2
ELECTRONIC IGNITION COIL—2.4L 2
AUTOMATIC SHUTDOWN RELAY. 3
CRANKSHAFT POSITION SENSOR—2.4L 3
CAMSHAFT POSITION SENSOR—2.4L 4
KNOCK SENSOR. 5
IGNITION SWITCH 6
LOCK KEY CYLINDER. 6
IGNITION INTERLOCK 6
REMOVAL AND INSTALLATION
SPARK PLUG CABLES—2.4L. 6
SPARK PLUG—2.4L. 6
IGNITION COIL—2.4L 7
AUTOMATIC SHUTDOWN RELAY. 7
CAMSHAFT POSITION SENSOR. 8
CRANKSHAFT POSITION SENSOR—2.4 L 8
KNOCK SENSOR. 9
IGNITION SWITCH 9
LOCK KEY CYLINDER. 11
IGNITION INTERLOCK 12
SPECIFICATIONS
VEHICLE EMISSION CONTROL
INFORMATION LABEL 12
FIRING ORDER. 12
TORQUE SPECIFICATION 12
SPARK PLUG CABLE RESISTANCE—2.4L. 12
SPARK PLUGS 12
IGNITION COILS. 13

DESCRIPTION AND OPERATION

IGNITION SYSTEM

DESCRIPTION

NOTE: The 2.4L engines use a fixed ignition timing system. Basic ignition timing is not adjustable. All spark advance is determined by the Powertrain Control Module (PCM).

The distributorless ignition system used on 2.4L engines (Fig. 1) is referred to as the Direct Ignition System (DIS). **Basic ignition timing is not adjustable.** The system's three main components are the coil pack, crankshaft position sensor, and camshaft position sensor.

OPERATION

The crankshaft position sensor and camshaft position sensor are hall effect devices. The camshaft position sensor and crankshaft position sensor generate pulses that are inputs to the PCM. The PCM determines crankshaft position from these sensors. The PCM calculates injector sequence and ignition timing from crankshaft position. For a description of both sensors, refer to Camshaft Position Sensor and Crankshaft Position Sensor in this section.

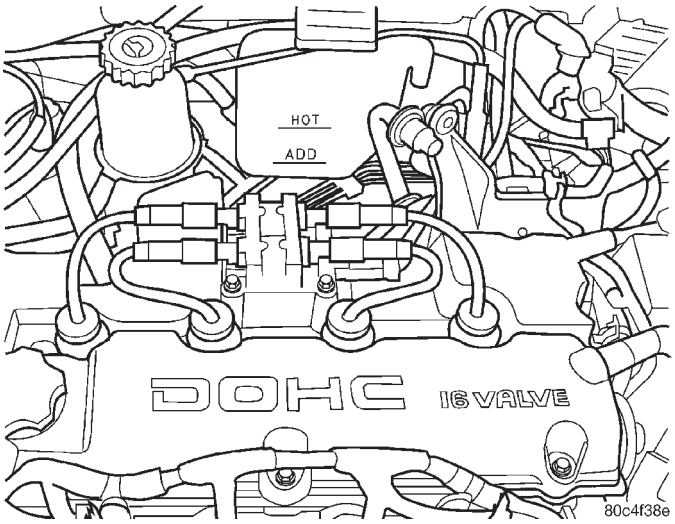

Fig. 1 Ignition Coil

SPARK PLUGS

The engine uses resistor type spark plugs.

Remove the spark plugs and examine them for burned electrodes and fouled, cracked or broken porcelain insulators. Keep plugs arranged in the order in which they were removed from the engine. An isolated plug displaying an abnormal condition indicates that a problem exists in the corresponding cylinder.

Spark plugs that have low mileage may be cleaned and reused if not otherwise defective. Adjust the gap

DESCRIPTION AND OPERATION (Continued)

between the electrodes (Fig. 2) to the dimensions specified in the chart at the end of this section by bending the ground electrode (just above the attachment weld) with the appropriate tool.

Never apply any force between the electrode or damage to the center electrode assembly will result.

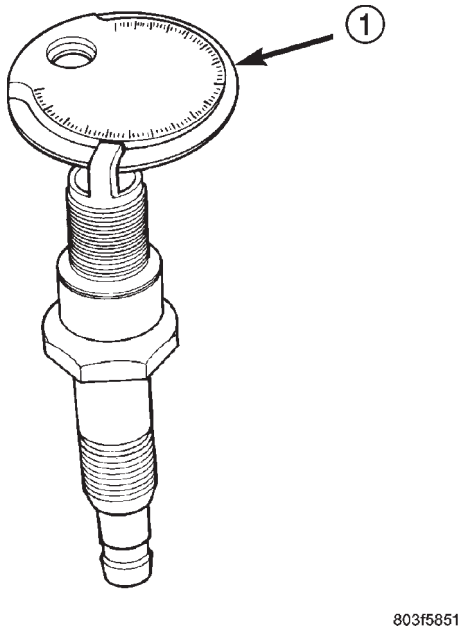

Fig. 2 Checking Spark Plug Electrode Gap

1 – TAPER GAUGE

WARNING: The tapered seat plugs for this application are torque-critical! It is imperative that 17.6 N·m +/- 2 (13 +/- 2 ft. lbs.) is NOT exceeded!

Always tighten spark plugs to the specified torque. Over tightening can cause distortion and damage. Tighten spark plugs to 17.6 +/- 2 N·m (13 +/- 2 ft. lbs.) torque.

SPARK PLUG CABLES

DESCRIPTION

Spark Plug cables are sometimes referred to as secondary ignition wires. They transfer electrical current from the coil pack, to individual spark plugs at each cylinder. The resistor type, nonmetallic spark plug cables provide suppression of radio frequency emissions from the ignition system.

Check the spark plug cable connections for good contact at the coil and at the spark plugs. Terminals should be fully seated. The nipples and spark plug covers should be in good condition. Nipples should fit tightly on the coil and spark plug cover should fit tight around spark plug insulators. Loose cable connections can cause ignition malfunctions by permitting water to enter the towers, corroding, and increasing resistance. **To maintain proper sealing at the terminal connections, the connections should not be broken unless testing indicates high resistance, an open circuit or other damage.**

Clean high tension cables with a cloth moistened with a non-flammable solvent and wipe dry. Check for brittle or cracked insulation. Plastic clips in various locations protect the cables from damage. When the cables are replaced the clips must be used to prevent damage to the cables.

ELECTRONIC IGNITION COIL—2.4L

WARNING: THE DIRECT IGNITION SYSTEM GENERATES APPROXIMATELY 40,000 VOLTS. PERSONAL INJURY COULD RESULT FROM CONTACT WITH THIS SYSTEM.

DESCRIPTION

The coil pack consists of 2 coils molded together. The coil pack is mounted on the valve cover (Fig. 3).

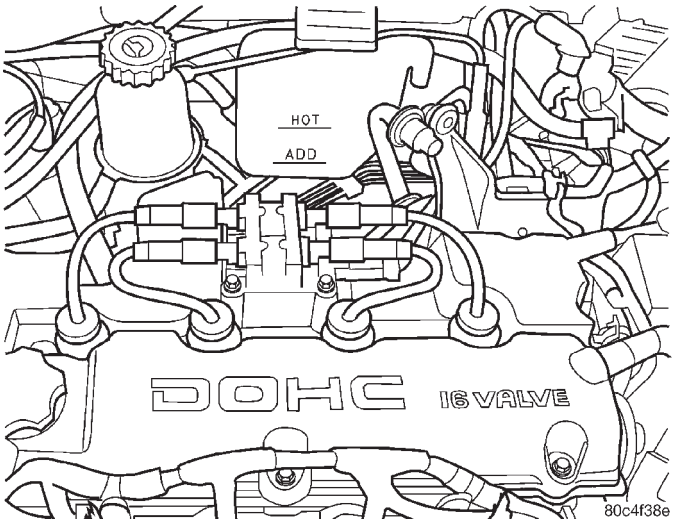

Fig. 3 Ignition Coil Pack—2.4L Engine

OPERATION

High tension leads route to each cylinder from the coil. The coil fires two spark plugs every power stroke. One plug is the cylinder under compression, the other cylinder fires on the exhaust stroke. Coil number one fires cylinders 1 and 4. Coil number two fires cylinders 2 and 3. The PCM determines which of the coils to charge and fire at the correct time.

The Auto Shutdown (ASD) relay provides battery voltage to the ignition coil. The PCM provides a ground contact (circuit) for energizing the coil. When the PCM breaks the contact, the energy in the coil primary transfers to the secondary causing the spark. The PCM will de-energize the ASD relay if it does not receive the crankshaft position sensor and camshaft position sensor inputs.

DESCRIPTION AND OPERATION (Continued)

AUTOMATIC SHUTDOWN RELAY

DESCRIPTION

The ASD relay is located in the PDC (Fig. 4). The inside top of the PDC cover has a label showing relay and fuse identification.

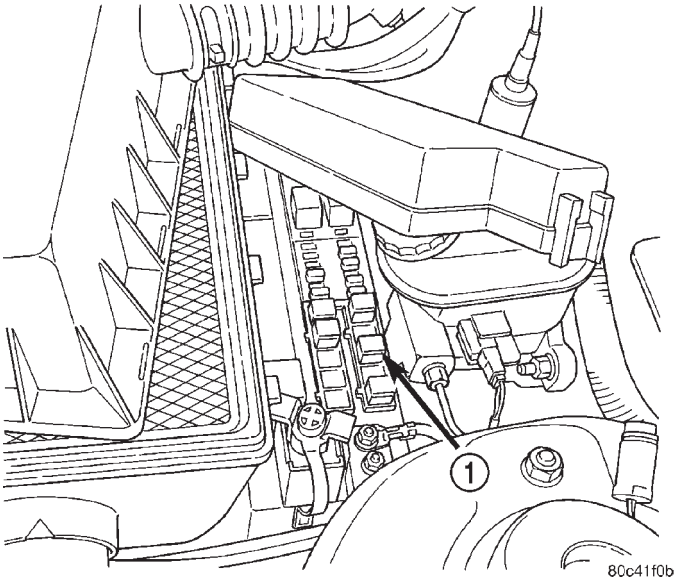

Fig. 4 Power Distribution Center (PDC)

1 – PDC

OPERATION

The Automatic Shutdown (ASD) relay supplies battery voltage to the fuel injectors, generator field, electronic ignition coil and the heating elements in the oxygen sensors.

Refer to the Wiring Diagrams for circuit information.

The PCM controls the ASD relay by switching the ground path for the solenoid side of the relay on and off. The PCM turns the ground path off when the ignition switch is in the Off position unless the O2 Heater Monitor test is being run. Refer to the On-Board Diagnostics in the Emission Control section. When the ignition switch is in On or Start, the PCM momentarily turns on the ASD relay. While the relay is on the PCM monitors the crankshaft and camshaft position sensor signals to determine engine speed and ignition timing (coil dwell). If the PCM does not receive crankshaft and camshaft position sensor signals when the ignition switch is in the Run position, it will de-energize the ASD relay.

CRANKSHAFT POSITION SENSOR—2.4L

DESCRIPTION

The crankshaft position sensor mounts to the engine block below the generator and near the oil filter (Fig. 5).

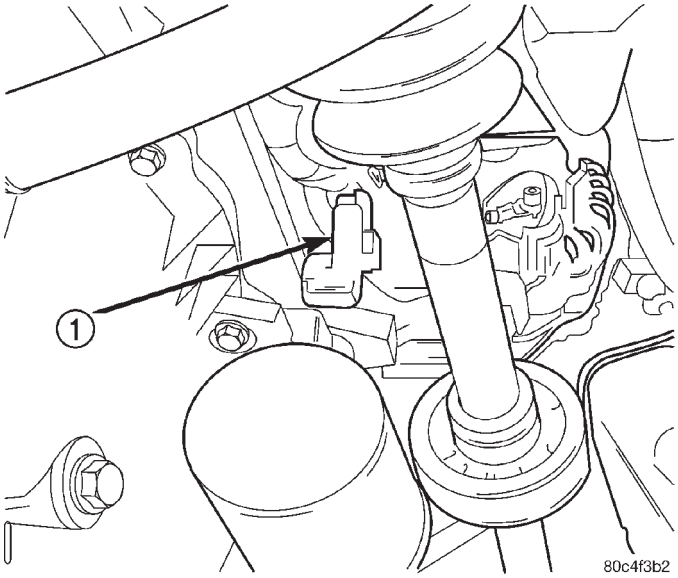

Fig. 5 Crankshaft Position Sensor

1 – CRANKSHAFT POSITION SENSOR

OPERATION

The PCM sends approximately 9 volts to the Hall-effect sensor. This voltage is required to operate the Hall-effect chip and the electronics inside the sensor. A ground for the sensor is provided through the sensor return circuit. The input to the PCM occurs on a 5 volt output reference circuit that operates as follows: The Hall-effect sensor contains a powerful magnet. As the magnetic field passes over the dense portion of the counterweight, the 5-volt signal is pulled to ground (.3 volts) through a transistor in the sensor. When the magnetic field passes over the notches in the crankshaft counterwieght, the magnetic field turns off the transistor in the sensor, causing the PCM to register the 5-volt signal. The PCM identifies crankshaft position by registering the change from 5 to 0 volts, as signaled from the Crankshaft Position sensor.

The PCM determines what cylinder to fire from the crankshaft position sensor input and the camshaft position sensor input. The second crankshaft counterweight has machined into it two sets of four timing reference notches including a 60 degree signature notch (Fig. 6). From the crankshaft position sensor input the PCM determines engine speed and crankshaft angle (position).

DESCRIPTION AND OPERATION (Continued)

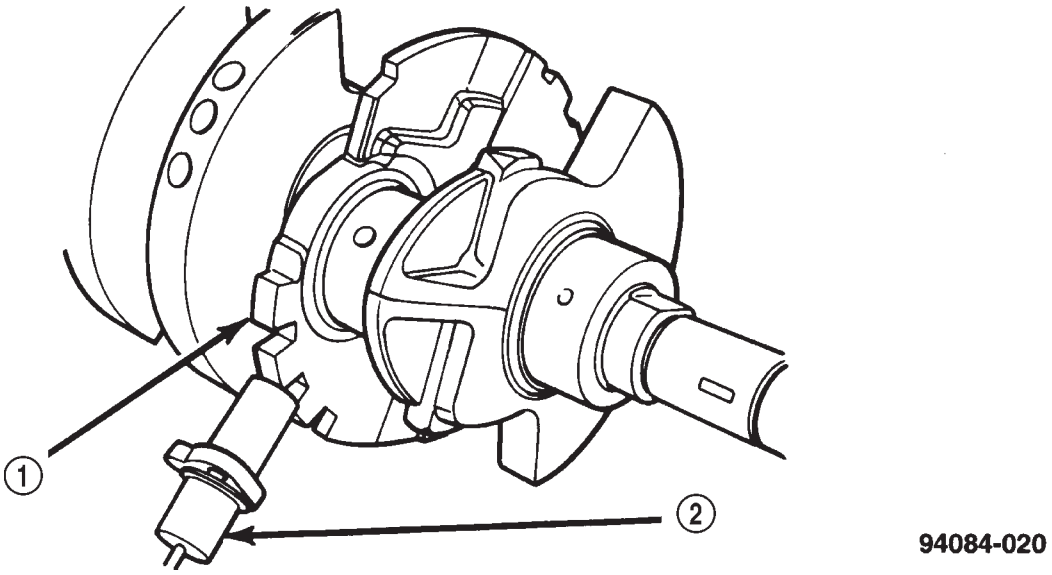

Fig. 6 Timing Reference Notches —Typical

1 – MACHINED NOTCHES
2 – CRANKSHAFT POSITION SENSOR

The notches generate pulses from high to low in the crankshaft position sensor output voltage. When a metal portion of the counterweight aligns with the crankshaft position sensor, the sensor output voltage goes low (less than 0.5 volts). When a notch aligns with the sensor, voltage goes high (5.0 volts). As a group of notches pass under the sensor, the output voltage switches from low (metal) to high (notch) then back to low.

CAMSHAFT POSITION SENSOR—2.4L

DESCRIPTION

The camshaft position sensor is mounted to the rear of the cylinder head. The sensor also acts as a thrust plate to control camshaft endplay (Fig. 8).

OPERATION

The PCM sends approximately 9 volts to the Hall-effect sensor. This voltage is required to operate the Hall-effect chip and the electronics inside the sensor. The input to the PCM occurs on a 5 volt output reference circuit. A ground for the sensor is provided through the sensor return circuit. The PCM identifies camshaft position by registering the change from 5 to 0 volts, as signaled from the Camshaft Position sensor.

A target magnet attaches to the rear of the camshaft and indexes to the correct position. The target magnet has four different poles arranged in an asymmetrical pattern. As the target magnet rotates, the camshaft position sensor senses the change in polarity (Fig. 9).

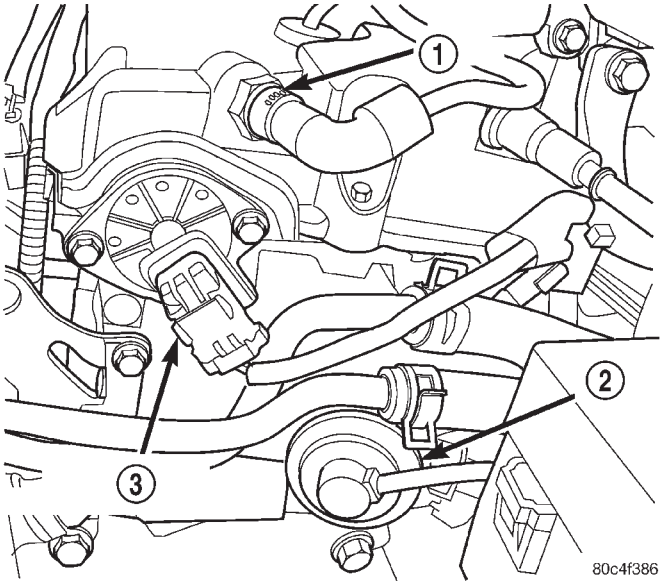

Fig. 7 Camshaft Position Sensor—2.4L DOHC

1 – PCV VALVE
2 – EGR VALVE
3 – CAMSHAFT POSITION SENSOR

The PCM determines fuel injection synchronization and cylinder identification from inputs provided by the camshaft position sensor (Fig. 7) and crankshaft position sensor. From the two inputs, the PCM determines crankshaft position.

DESCRIPTION AND OPERATION (Continued)

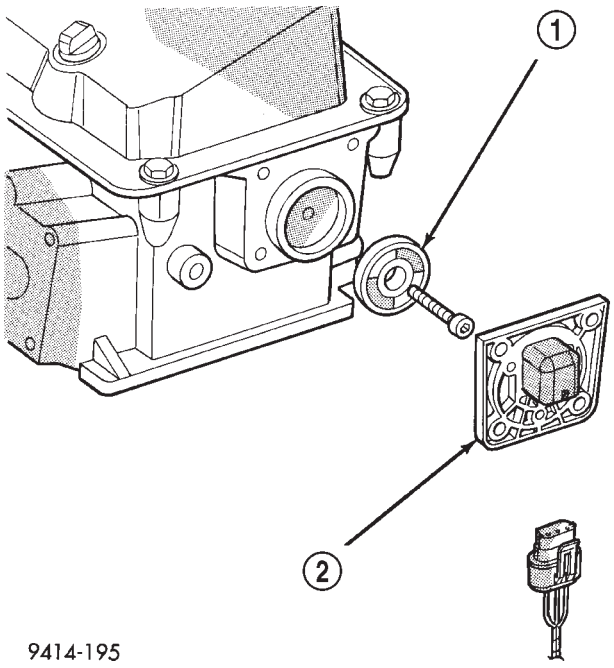

Fig. 8 Target Magnet—Typical

1 – CAM MAGNET/TARGET
2 – CAMSHAFT POSITION SENSOR

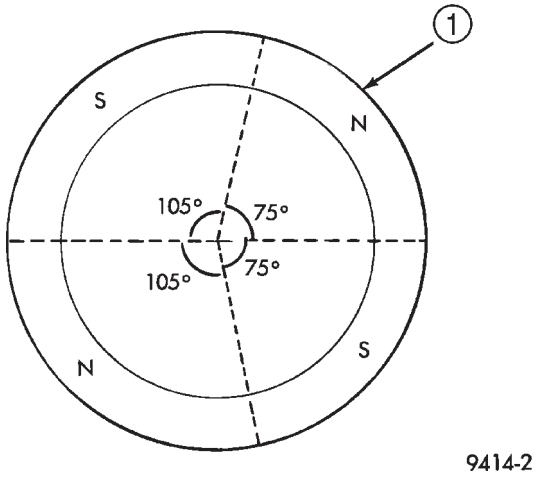

Fig. 9 Target Magnet Polarity

1 – TARGET MAGNET

The sensor input switches from high (5 volts) to low (0.30 volts) as the target magnet rotates. When the north pole of the target magnet passes under the sensor, the output switches high. The sensor output switches low when the south pole of the target magnet passes underneath.

KNOCK SENSOR

DESCRIPTION

The knock sensor threads into the cylinder block. The knock sensor is designed to detect engine vibration that is caused by detonation.

OPERATION

When the knock sensor detects a knock in one of the cylinders, it sends an input signal to the PCM. In response, the PCM retards ignition timing for all cylinders by a scheduled amount.

Knock sensors contain a piezoelectric material which constantly vibrates and sends an input voltage (signal) to the PCM while the engine operates. As the intensity of the crystal's vibration increases, the knock sensor output voltage also increases.

The voltage signal produced by the knock sensor increases with the amplitude of vibration. The PCM receives as an input the knock sensor voltage signal. If the signal rises above a predetermined level, the PCM will store that value in memory and retard ignition timing to reduce engine knock. If the knock sensor voltage exceeds a preset value, the PCM retards ignition timing for all cylinders. It is not a selective cylinder retard.

The PCM ignores knock sensor input during engine idle conditions. Once the engine speed exceeds a specified value, knock retard is allowed.

Knock retard uses its own short term and long term memory program.

Long term memory stores previous detonation information in its battery-backed RAM. The maximum authority that long term memory has over timing retard can be calibrated.

Short term memory is allowed to retard timing up to a preset amount under all operating conditions (as long as rpm is above the minimum rpm) except WOT. The PCM, using short term memory, can respond quickly to retard timing when engine knock is detected. Short term memory is lost any time the ignition key is turned off.

NOTE: Over or under tightening affects knock sensor performance, possibly causing improper spark control.

DESCRIPTION AND OPERATION (Continued)

IGNITION SWITCH

In the RUN position, the ignition switch connects power from the Power Distribution Center (PDC) to a fuse in the fuse block, back to a bus bar in the PDC. The bus bar feeds circuits for the Powertrain Control Module (PCM), Proportional purge solenoid, EGR solenoid, and ABS system. The bus bar in the PDC feeds the coil side of the radiator fan relay, A/C compressor clutch relay, and the fuel pump relay. It also feeds the Airbag Control Module (ACM)

LOCK KEY CYLINDER

DESCRIPTION

The lock cylinder is inserted in the end of the housing opposite the ignition switch.

OPERATION

The ignition key rotates the cylinder to 5 different detents (Fig. 10) :

- Accessory
- Off (lock)
- Unlock
- On/Run
- Start

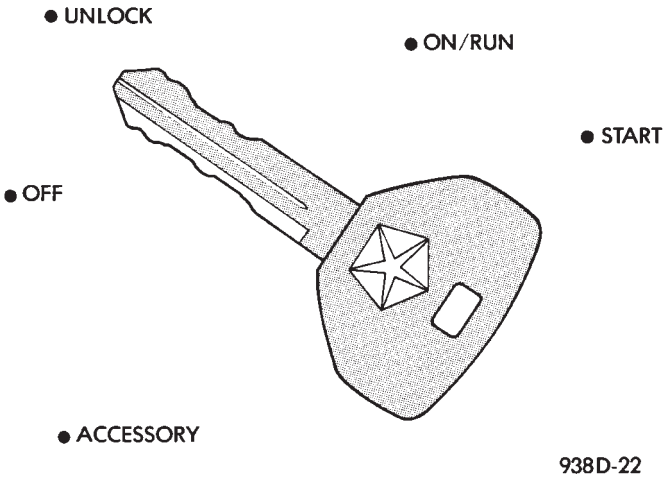

Fig. 10 Ignition Lock Cylinder Detents

IGNITION INTERLOCK

OPERATION

All vehicles equipped with automatic transaxles have an interlock system. The system prevents shifting the vehicle out of Park unless the ignition lock cylinder is in the Unlock, Run or Start position. In addition, the operator cannot rotate the key to the lock position unless the shifter is in the park position. On vehicles equipped with floor shift refer to the - Transaxle for Automatic Transmission Shifter/ Ignition Interlock.

REMOVAL AND INSTALLATION

SPARK PLUG CABLES—2.4L

Clean high tension cables with a cloth moistened with a non-flammable solvent. Wipe the cables dry. Check for brittle or cracked insulation.

Resistance cables are identified by the words **Electronic Suppression**.

REMOVAL

(1) Remove the air cleaner lid, disconnect the inlet air sensor and makeup air hose.

(2) Disconnect the negative battery cable.

(3) Remove the upper intake manifold, refer to the Engine section for more information.

(4) Disconnect the cable from the ignition coil first.

(5) The cables insulate the spark plugs and cover the top of the spark plug tubes. To remove the cables, lightly grasp the top of the cable. Rotate the insulator 90° and pull straight up (Fig. 11).

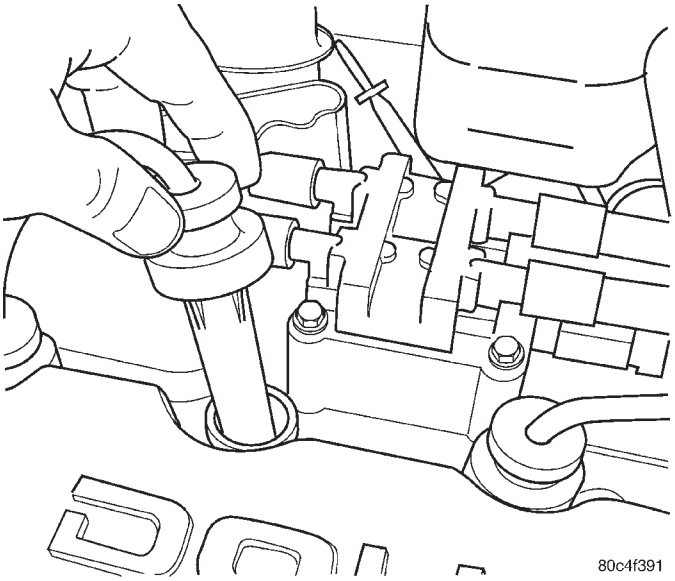

Fig. 11 Spark Plug Cable

INSTALLATION

(1) To install the cables, lightly grasp the top of the cable. Rotate the insulator and push straight down.

(2) Connect the cable to the ignition coil.

(3) Install the upper intake manifold, refer to the Engine section for more information

(4) Connect the negative battery cable.

(5) Install the air cleaner lid and connect the inlet air temperature sensor and makeup hose.

SPARK PLUG—2.4L

Failure to route the cables properly could cause the radio to reproduce ignition noise, cross ignition of the spark plugs or short circuit the cables to ground.

REMOVAL AND INSTALLATION (Continued)

NOTE: REMOVE cables from coil first before removing spark plug insulator.

Special care should be used when installing spark plugs in the 2.4L cylinder head spark plug wells. Be sure the plugs do not drop into the wells, damage to the electrodes can occur.

Always tighten spark plugs to the specified torque. Over tightening can cause distortion resulting in a change in the spark plug gap. Overtightening can also damage the cylinder head.

REMOVAL

(1) Remove the air cleaner lid, disconnect the inlet air sensor and makeup air hose.

(2) Disconnect the negative battery cable.

(3) Remove the upper intake manifold, refer to the Engine section for more information.

(4) Disconnect the cable from the ignition coil first (Fig. 11).

Always remove the spark plug cable by grasping the top of the spark plug insulator, rotate the boot 90° and pulling straight up in a steady motion.

(5) Remove the spark plug using a quality socket with a rubber or foam insert.

(6) Inspect the spark plug condition.

INSTALLATION

(1) To avoid cross threading, start the spark plug into the cylinder head by hand.

WARNING: The tapered seat plugs for this application are torque-critical! It is imperative that 17.6 N·m +/- 2 (13 +/- 2 ft. lbs.) is NOT exceeded!

(2) Tighten spark plugs to 17.6 +/- 2 N·m (13 +/- 2 ft. lbs.) torque.

(3) Install spark plug insulators over spark plugs. Ensure the top of the spark plug insulator covers the upper end of the spark plug tube.

(4) Install spark plug cable to coil.

(5) Install the upper intake manifold, refer to the Engine section for more information

(6) Connect the negative battery cable.

(7) Install the air cleaner lid and connect the inlet air temperature sensor and makeup hose.

IGNITION COIL—2.4L

The electronic ignition coil pack attaches directly to the valve cover (Fig. 12).

REMOVAL

(1) Remove the negative battery cable.

(2) Disconnect electrical connector from coil pack.

(3) Remove coil pack mounting nuts.

(4) Remove coil pack.

INSTALLATION

(1) Install coil pack on valve cover. Tighten the bolts to 11.8 N·m (105 ±20 in. lbs.).

(2) Transfer spark plug cables to new coil pack. The coil pack towers are numbered with the cylinder identification. Be sure the ignition cables snap onto the towers.

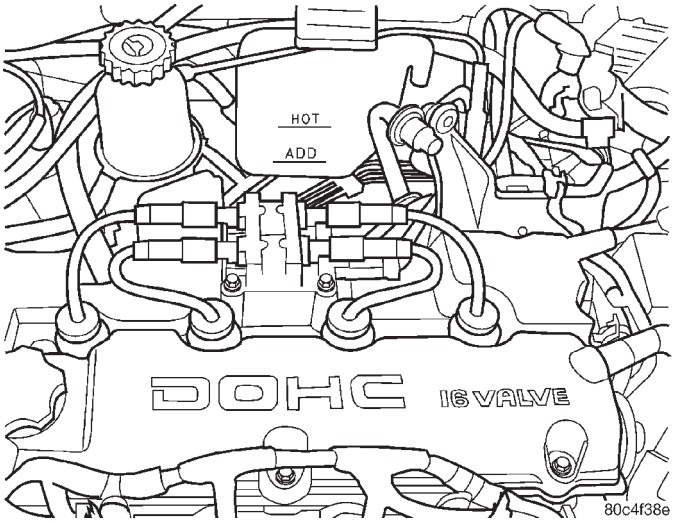

Fig. 12 Electronic Ignition Coil Pack—2.4L

(3) Install the negative battery cable.

AUTOMATIC SHUTDOWN RELAY

The relay is located in the Power Distribution Center (PDC) (Fig. 13). For the location of the relay within the PDC, refer to the PDC cover for location. Check electrical terminals for corrosion and repair as necessary.

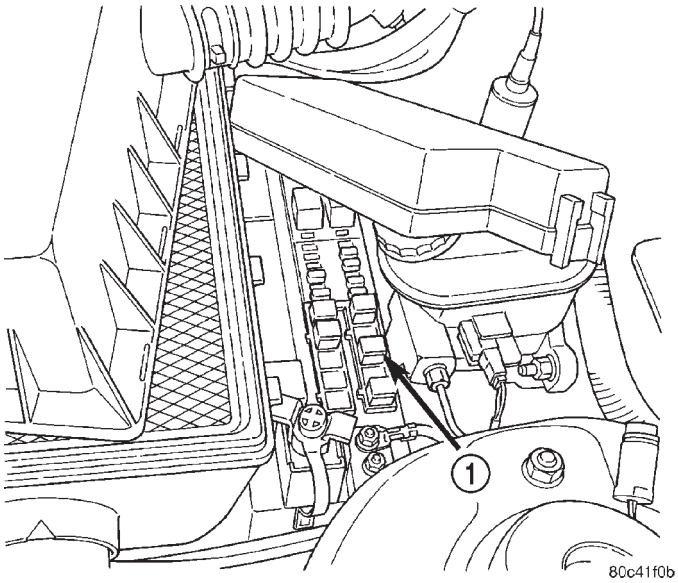

Fig. 13 Power Distribution Center (PDC)

1 – PDC

REMOVAL AND INSTALLATION (Continued)

CAMSHAFT POSITION SENSOR

The camshaft position sensor is mounted to the rear of the cylinder head (Fig. 14).

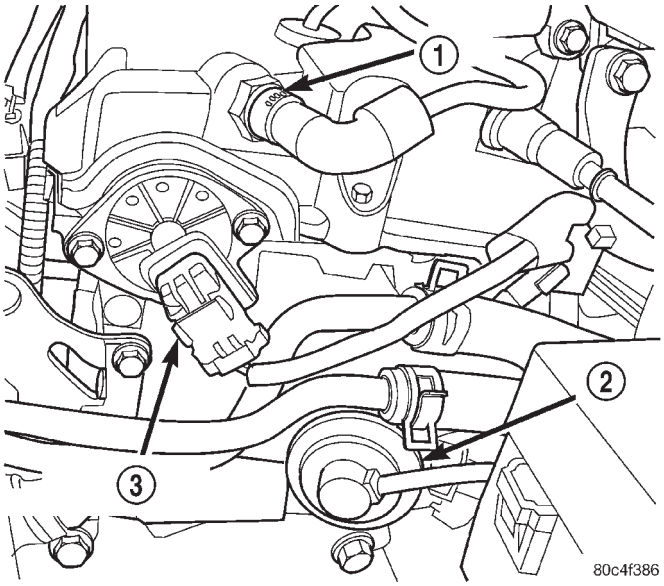

Fig. 14 Camshaft Position Sensor Location—DOHC

1 – PCV VALVE
2 – EGR VALVE
3 – CAMSHAFT POSITION SENSOR

REMOVAL

(1) Remove the air cleaner lid, disconnect the inlet air temperature sensor and makeup air hose.

(2) Remove the negative battery cable.

(3) Disconnect electrical connector from camshaft position sensor.

(4) Remove camshaft position sensor mounting screws. Remove sensor.

(5) Loosen screw attaching target magnet to rear of camshaft (Fig. 15).

INSTALLATION

The target magnet has locating dowels that fit into machined locating holes in the end of the camshaft (Fig. 16).

(1) Install target magnet in end of camshaft. Tighten mounting screw to 3.6 N·m (32 ±5 in. lbs.) torque. Over torqueing could cause cracks in magnet. If magnet cracks replace it.

(2) Install camshaft position sensor. Tighten sensor mounting screws to 13 N·m (115 ±15 in. lbs.) torque.

(3) Carefully attach electrical connector to camshaft position sensor. Installation at an angle may damage the sensor pins.

(4) Install the negative battery cable.

(5) Install the air cleaner lid, connect the inlet air temperature sensor and makeup air hose.

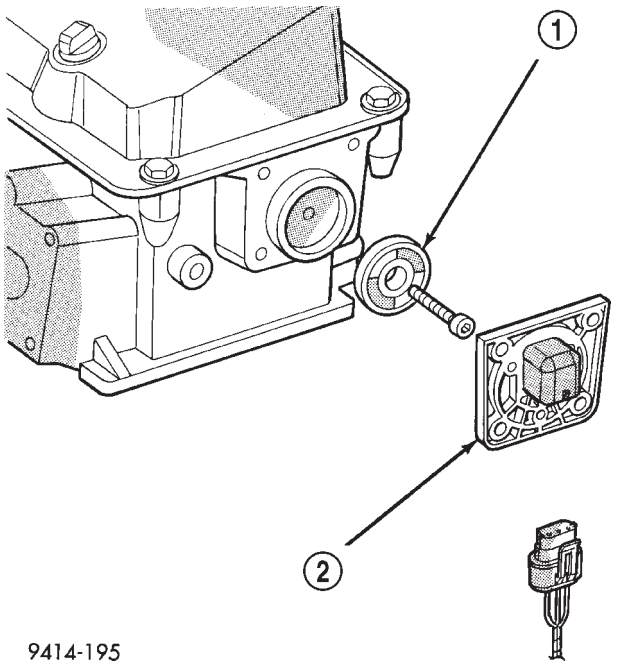

Fig. 15 Target Magnet Removal/Installation

1 – CAM MAGNET/TARGET
2 – CAMSHAFT POSITION SENSOR

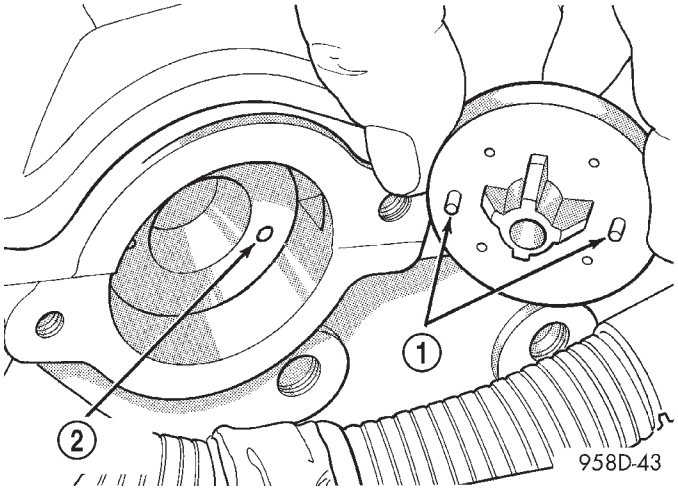

Fig. 16 Target Magnet Installation

1 – LOCATING DOWELS
2 – LOCATING HOLES (2)

CRANKSHAFT POSITION SENSOR—2.4 L

The crankshaft position sensor mounts to the engine block below the generator, just above the oil filter (Fig. 17).

REMOVAL

(1) Remove the air cleaner lid, disconnect the inlet air temperature sensor and makeup air hose.

(2) Remove the negative battery cable.

(3) Raise the vehicle and support.

REMOVAL AND INSTALLATION (Continued)

(4) Disconnect electrical connector from crankshaft position sensor.

(5) Remove sensor mounting screw. Remove sensor.

INSTALLATION

(1) Install sensor and tighten the screw to 13 N·m (115 ±15 in. lbs.).

(2) Connect electrical connector to crankshaft position sensor.

(3) Lower vehicle.

(4) Install the negative battery cable.

(5) Install the air cleaner lid, connect the inlet air temperature sensor and makeup air hose.

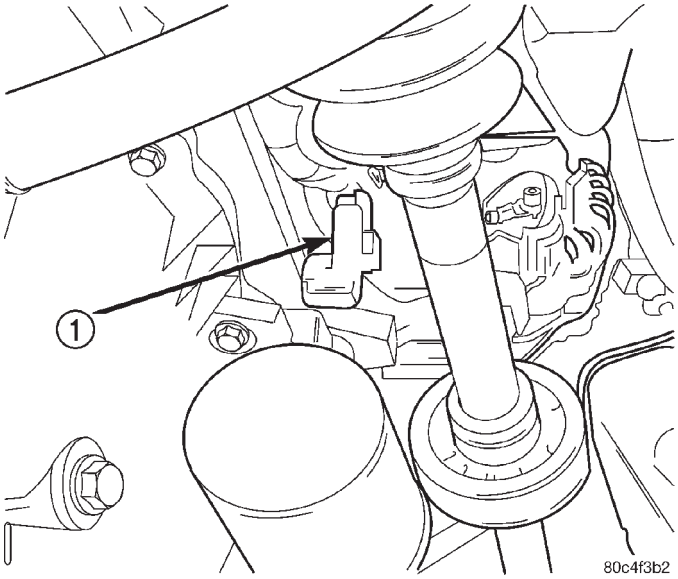

Fig. 17 Crankshaft Position Sensor—2.4L

1 – CRANKSHAFT POSITION SENSOR

KNOCK SENSOR

The knock sensor threads into the side of the cylinder block in front of the starter (Fig. 18).

REMOVAL

(1) Disconnect electrical connector from knock sensor.

(2) Use a crow foot socket to remove the knock sensors.

INSTALLATION

(1) Install knock sensor. Tighten knock sensor to 10 N·m (7 ft. lbs.) torque. **Over or under tightening effects knock sensor performance, possibly causing improper spark control.**

(2) Attach electrical connector to knock sensor.

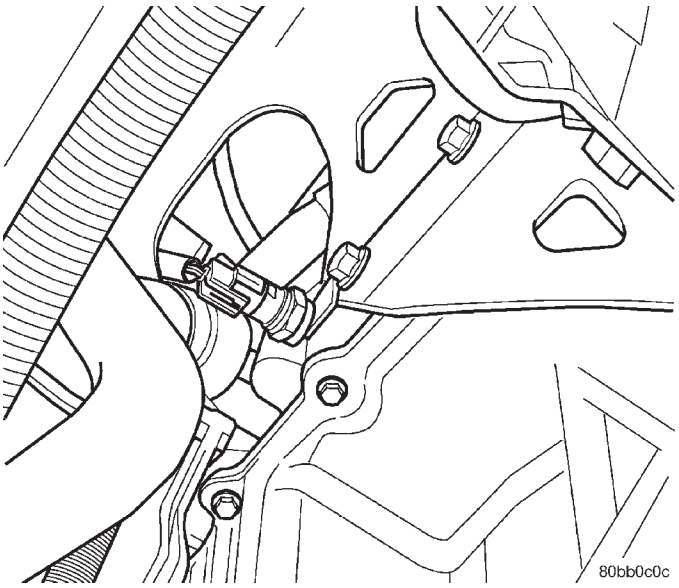

Fig. 18 Knock Sensor

IGNITION SWITCH

The ignition switch attaches to the lock cylinder housing on the end opposite the lock cylinder (Fig. 19). For ignition switch terminal and circuit identification, refer to the Wiring Diagrams sections.

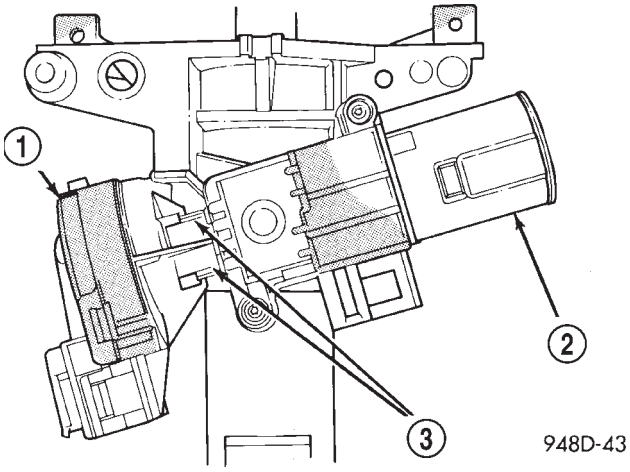

Fig. 19 Ignition Switch—Viewed From Below Column

1 – IGNITION SWITCH
2 – LOCK CYLINDER HOUSING
3 – RETAINING TABS

REMOVAL

(1) Remove the air cleaner lid, disconnect the inlet air temperature sensor and makeup air hose.

(2) Disconnect negative cable from battery.

(3) Place key cylinder in RUN position. Through the hole in the lower shroud, depress lock cylinder retaining tab and remove key cylinder (Fig. 20).

REMOVAL AND INSTALLATION (Continued)

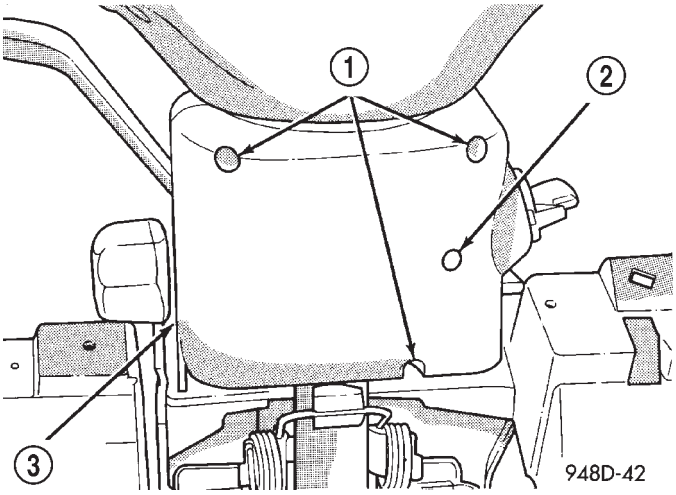

Fig. 20 Steering Column Shrouds

1 – SCREW ACCESS HOLE
2 – TAB ACCESS HOLE
3 – LOWER SHROUD

(4) Remove upper and lower shrouds from steering column.

(5) Disconnect electrical connectors from ignition switch (Fig. 21).

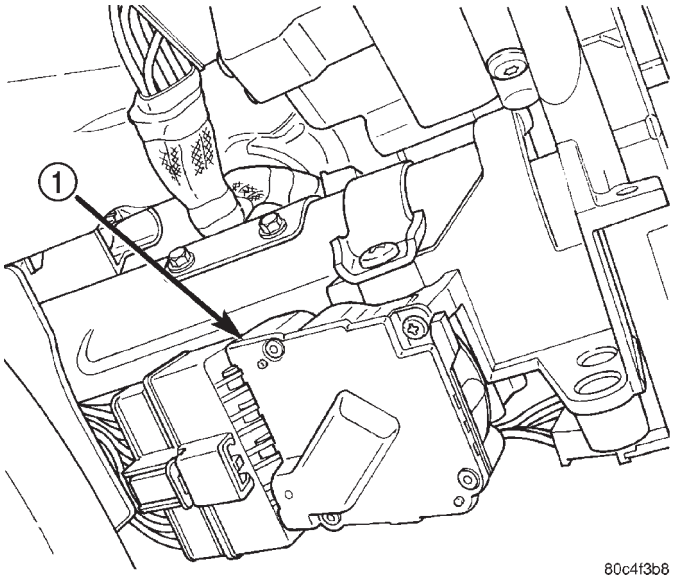

Fig. 21 Ignition Switch

1 – IGNITION SWITCH

(6) Remove the 2 screws on the top of the multi-function switch and relocate (Fig. 22).

(8) Remove ignition switch mounting screw (Fig. 23) with a #10 Torx® bit.

(9) Pull ignition switch from steering column (Fig. 24).

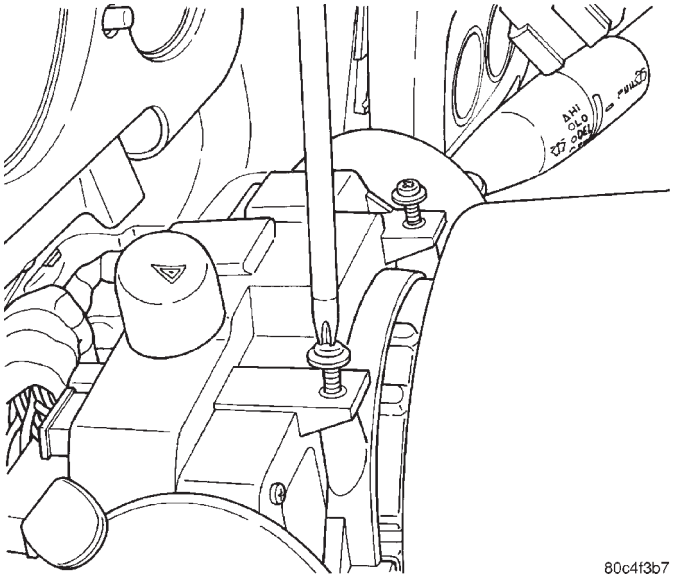

Fig. 22 Multi-Function Switch

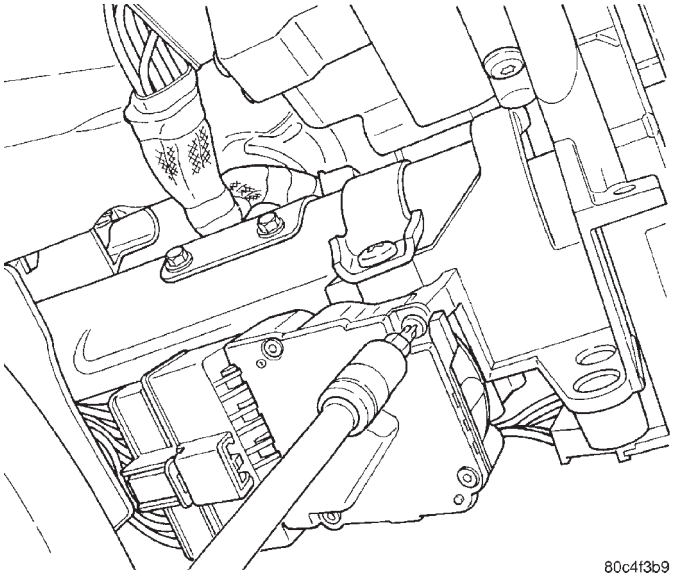

Fig. 23 Ignition Switch Mounting Screw

INSTALLATION

(1) Ensure the ignition switch is in the RUN position and the actuator shaft in the lock housing is in the RUN position.

(2) Carefully install the ignition switch. The switch will snap over the retaining tabs (Fig. 25). Install mounting screw (Fig. 23).

(3) Install electrical connectors to ignition switch.

(4) Install the multi-function switch and tighten the 2 screws (Fig. 22).

(5) Install upper and lower shrouds.

(6) Install key cylinder (cylinder retaining tab will depress only in the RUN position).

(7) Connect negative cable to battery.

(8) Install the air cleaner lid, connect the inlet air temperature sensor and makeup air hose.

REMOVAL AND INSTALLATION (Continued)

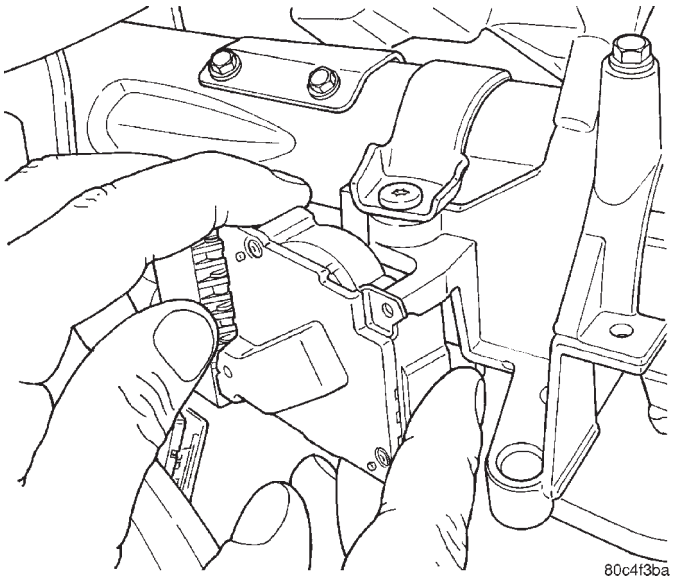

Fig. 24 Removing Ignition Switch

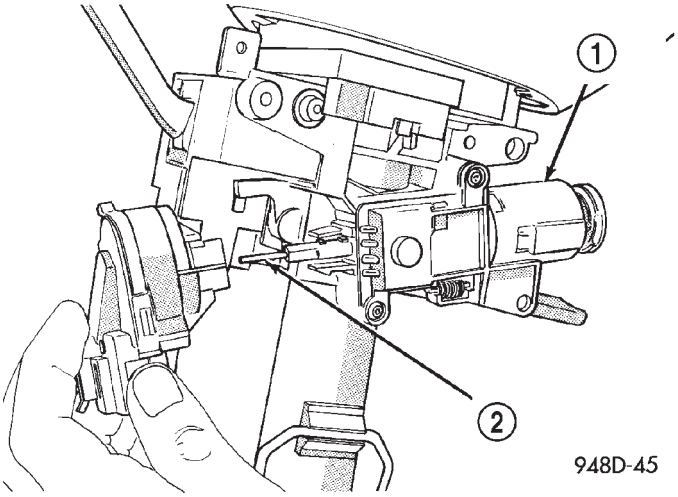

Fig. 25 Ignition Switch Installation

1 – LOCK CYLINDER HOUSING
2 – SHAFT

(10) Check for proper operation of ignition switch and key-in warning switch.

LOCK KEY CYLINDER

The lock cylinder is inserted in the end of the housing opposite the ignition switch. The ignition key rotates the cylinder to 5 different detentes (Fig. 26) :

- Accessory
- Off (lock)
- Unlock
- On/Run
- Start

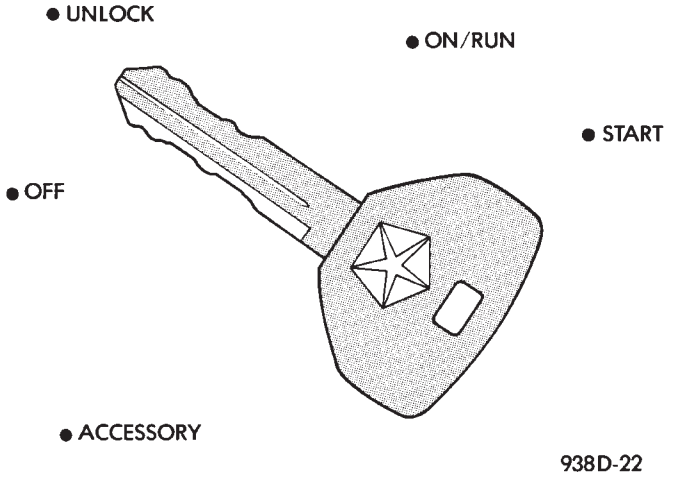

Fig. 26 Ignition Lock Cylinder Detentes

REMOVAL

(1) Disconnect negative cable from battery.

(2) Place key cylinder in RUN position. Through the hole in the lower shroud, depress lock cylinder retaining tab and remove key cylinder.

INSTALLATION

(1) Install key in lock cylinder. Turn key to run position (retaining tab on lock cylinder can be depressed).

(2) The shaft at the end of the lock cylinder aligns with the socket in the end of the housing. To align the socket with the lock cylinder, ensure the socket is in the Run position (Fig. 27).

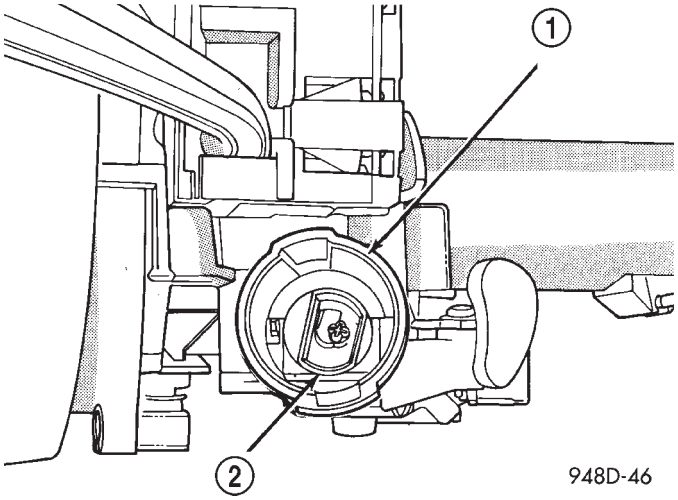

Fig. 27 Socket in Lock Cylinder Housing

1 – LOCK CYLINDER HOUSING
2 – SOCKET

REMOVAL AND INSTALLATION (Continued)

(3) Align the lock cylinder with the grooves in the housing. Slide the lock cylinder into the housing until the tab sticks through the opening in the housing.
(4) Turn the key to the Off position. Remove the key.
(5) Connect negative cable to battery.

IGNITION INTERLOCK

Refer to the Transaxle section for Shifter/Ignition Interlock Service.

SPECIFICATIONS

VEHICLE EMISSION CONTROL INFORMATION LABEL

DESCRIPTION

All models have a Vehicle Emission Control Information (VECI) Label. Chrysler permanently attaches the label in the engine compartment. It cannot be removed without defacing information and destroying the label.

The label contains the vehicle's emission specifications and vacuum hose routings. All hoses must be connected and routed according to the label.

FIRING ORDER

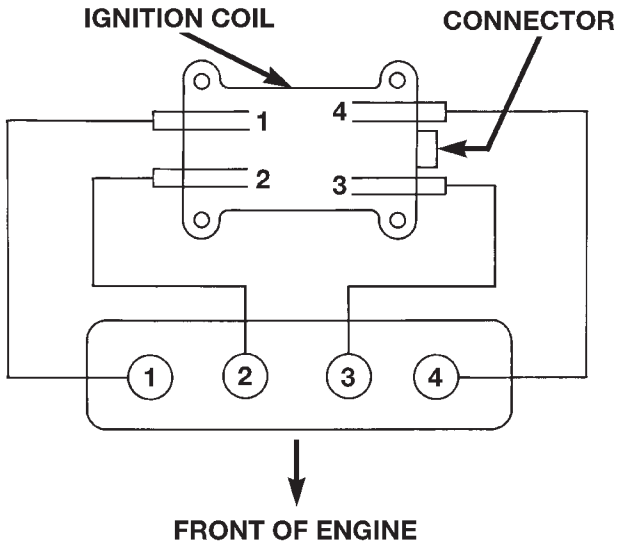

FIRING ORDER 1-3-4-2 8008a549

FIRING ORDER—2.4L

TORQUE SPECIFICATION

DESCRIPTION	TORQUE
Air Inlet tube Clamp	3 N·m (25 in. lbs.)
Camshaft Position Sensor Screw	13 N·m (115 +/-15 in. lbs.)
Cam Magnet/Target	3.6 N·m (32 +/-5 in. lbs.)
Coolant Sensor	27 N·m (20 ft. lbs.)
Crankshaft Position Sensor Screw	13 N·m (115 +/-15 in. lbs.)
EGR Tube to Intake	11 N·m (95 in. lbs.)
Ignition Coil Bolts	12 N·m (105 +/-20 in. lbs.)
Knock Sensor	10 N·m (90 in. lbs.)
Spark Plugs	17.6 +/- 2 N·m (13 +/- 2 ft. lbs.)

SPARK PLUG CABLE RESISTANCE—2.4L

CABLE	RESISTANCE
All Cables	2500 ohms— 8300 ohms

SPARK PLUGS

ENGINE	PLUG TYPE	ELECTRODE GAP
2.4L	RE14MCC5	1.24 to 1.37 mm (0.048 to 0.053 in.)

SPECIFICATIONS (Continued)

IGNITION COILS

Engines	Coil Manufacture	Primary Resistance at 21°C-27°C (70°F-80°F)	Secondary Resistance at 21°C-27°C (70°F-80°F)
2.4L	Toyodenso/ Diamond	0.51 TO 0.61 Ohms	11,500 to 13,500 Ohms

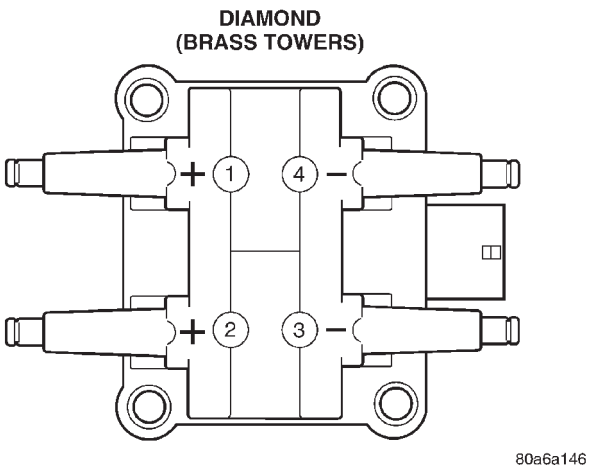

Coil Polarity

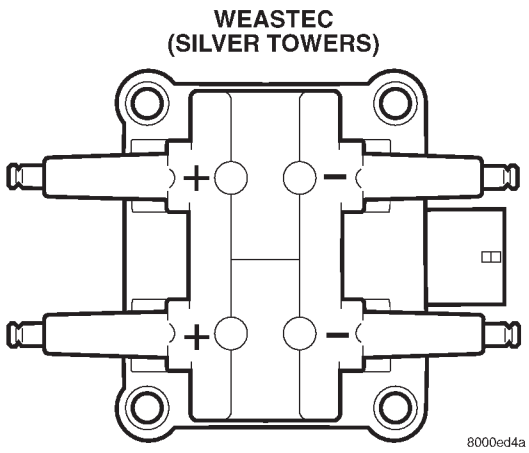

Coil Polarity

INSTRUMENT PANEL SYSTEMS

TABLE OF CONTENTS

	page
DESCRIPTION AND OPERATION	
INSTRUMENT PANEL ASSEMBLY	1
INSTRUMENT CLUSTER	1
WARNING AND INDICATOR LAMPS	2
DIAGNOSIS AND TESTING	
AIRBAG WARNING SYSTEM	3
BRAKE SYSTEM WARNING LAMP TEST	3
INSTRUMENT CLUSTER WARNING/ INDICATOR LAMPS	3
LOW OIL PRESSURE WARNING LAMP TEST	4
MULTIPLE/INDIVIDUAL GAUGES INOPERATIVE	4
SERVICE PROCEDURES	
INSTRUMENT CLUSTER SELF-DIAGNOSTICS	4
REMOVAL AND INSTALLATION	
ACCESSORY SWITCH BEZEL	5
A/C OUTLET HOUSING	6
CENTER CONSOLE FLOOD LAMP	7
CLUSTER AREA SUPPORT PANEL	8
GLOVE BOX ASSEMBLY	8
GLOVE BOX DOOR/BIN/LATCH	9
GLOVE BOX LOCK CYLINDER	9
HVAC CONTROL	10
HVAC CONTROL KNOBS	10
INSTRUMENT CLUSTER/MASK and LENS	11
INSTRUMENT CLUSTER BEZEL	11
INSTRUMENT CLUSTER LAMPS	12
INSTRUMENT PANEL ASSEMBLY	13
INSTRUMENT PANEL CENTER BEZEL	18
INSTRUMENT PANEL END CAP	19
INSTRUMENT PANEL TOP COVER	20
LEFT LOWER INSTRUMENT PANEL BEZEL	22
STEERING COLUMN SHROUDS	22
TRACTION CONTROL SWITCH	23

DESCRIPTION AND OPERATION

INSTRUMENT PANEL ASSEMBLY

DESCRIPTION

The Instrument Panel can be removed as an assembly after a few parts are removed to allow access to the retaining bolts.

OPERATION

Once removed, the instrument panel can be serviced for replacement. Most of the parts of the instrument panel can be replaced individually without removing the complete instrument panel assembly.

INSTRUMENT CLUSTER

DESCRIPTION

The cluster electronically drives the speedometer, odometer, fuel/temperature gauges, and tachometer. On the back of the cluster are two self-docking connectors, a 26-way and a 10-way.

All the indicators are located within the three gauges:

- Speedometer
- Tachometer
- Fuel/Temperature Gauge

This is a smart cluster and used to control many Body Control Module (BCM) functions.

The purpose of the instrument cluster gauges and indicator lamps is to keep the driver informed about the operating condition of the vehicle. If an abnormal condition occurs, the driver is informed by indicator lamp and a chime. The driver can seek service before damage occurs.

OPERATION

The instrument cluster controls the courtesy lamps. It receives and sends messages to other modules via the PCI bus circuit. It controls all the instrument illumination and the chime is also an integral part of the cluster.

All gauges are the analog type. When the ignition switch is moved to the OFF position, the cluster drives each gauge to its lowest position. The individual gauges are not serviceable and require complete replacement of the cluster if one or more gauges are inoperable.

One button is used to switch the display from trip to total mileage. Holding the button when the display is in the trip mode will reset the trip mileage. This button is also used to put the cluster in self-diagnostic mode. Refer to Service Procedures, Instrument Cluster Self-Diagnostics in this section. Most of the indicators will come on briefly for a bulb check when

DESCRIPTION AND OPERATION (Continued)

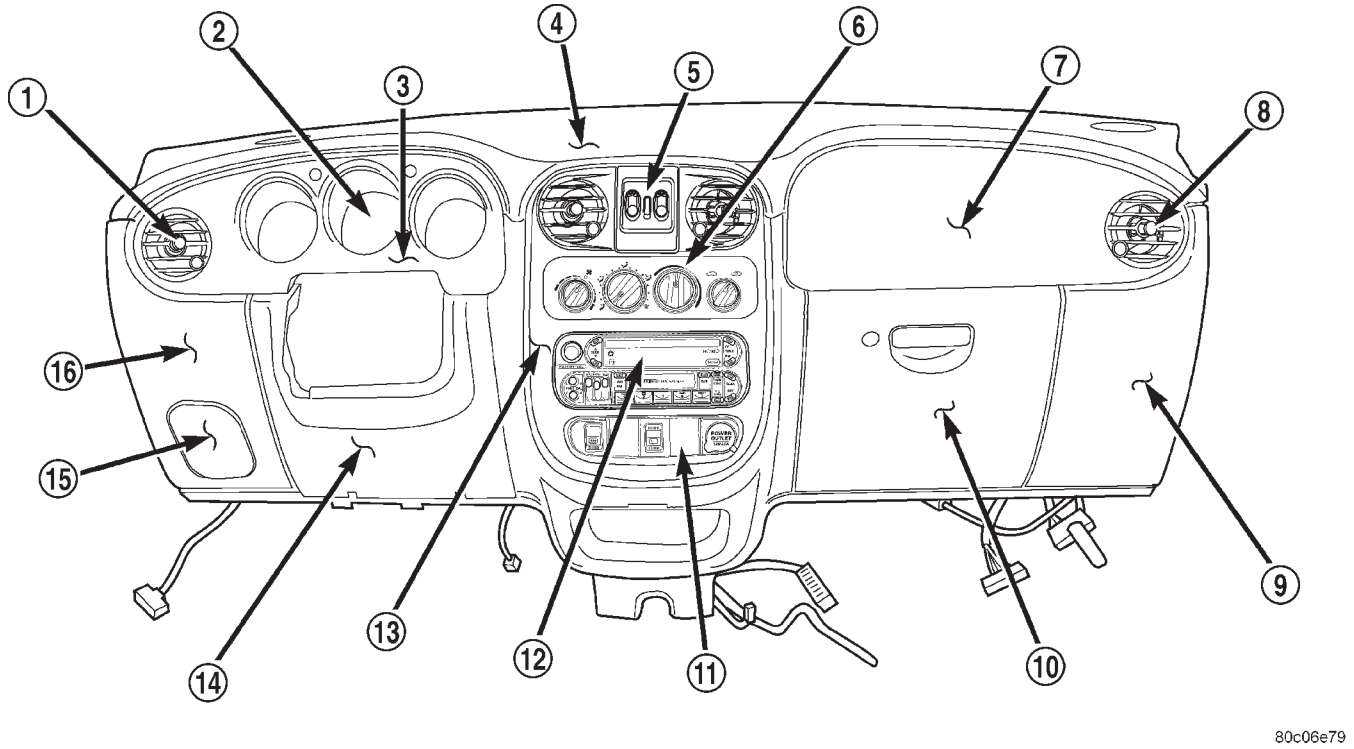

Fig. 1 Instrument Panel Assembly

1 – LEFT I/P A/C OUTLET HOUSING
2 – INSTRUMENT CLUSTER
3 – INSTRUMENT CLUSTER BEZEL
4 – I/P TOP COVER
5 – POWER WINDOW SWITCH
6 – HVAC CONTROL
7 – PASSENGER AIRBAG MODULE/COVER
8 – RIGHT I/P A/C OUTLET HOUSING
9 – RIGHT I/P ENDCAP
10 – I/P GLOVE BOX ASSEMBLY
11 – ACCESSORY SWITCH BEZEL
12 – RADIO
13 – I/P CENTER BEZEL
14 – LEFT LOWER I/P TRIM
15 – FUSE COVER
16 – LEFT I/P ENDCAP

the ignition is turned from OFF to ON. The LED's are non serviceable and if one or more warning indictor LED's are out, the entire cluster must be replaced.

In the event that the instrument cluster looses communication with all other modules on the PCI bus, the cluster will display "nobuS" in the VF display. The VF display also displays "Door", "Cruise", "Trac", and odometer trip or total.

If the cluster does not detect voltage on the courtesy lamp circuit, the message "FUSE" will alternate with the odometer/trip odometer for 30 seconds after the ignition is turned on and for 15 seconds after the vehicle is first moved. The lack of voltage can be due to the M1 Fused B(+) (IOD) fuse being open, a bad or missing courtesy lamp bulb, or a circuit problem.

Indicator lamps use ON/OFF switch functions for operation, while gauges use a sending unit or sensor.

The instrument cluster will learn some features of the vehicle that it is installed in so swapping clusters from vehicle to vehicle is not recommended.

The features that are learned are:

- ABS
- SKIM
- RKE
- Air Bags
- Cruise Control
- Lowest Fuel Level

WARNING AND INDICATOR LAMPS

DESCRIPTION

The instrument cluster has warning lamps and indicators for the following systems:

- Airbag
- Anti-lock Brakes (ABS) if equipped
- Brake Warning
- Charging System
- Front Fog Lamps (if equipped)
- High Beam
- Low Fuel
- Low Oil Pressure
- Engine Temperature

DESCRIPTION AND OPERATION (Continued)

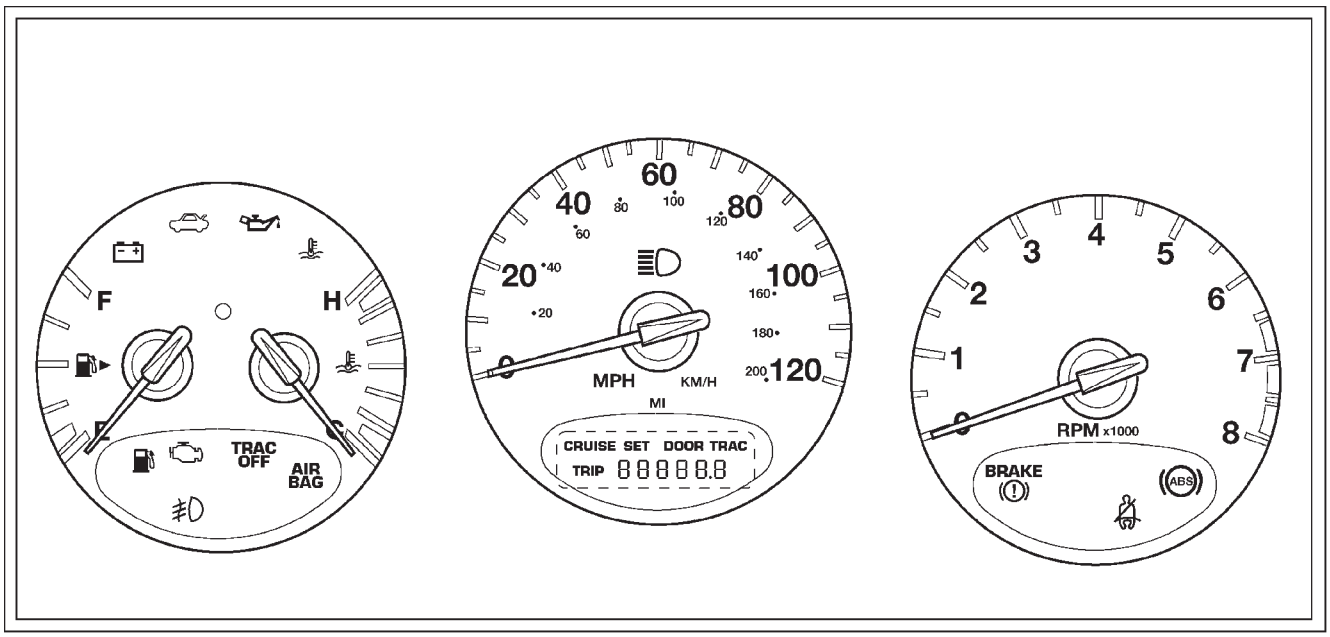

Fig. 2 Instrument Cluster

- Malfunction Indicator Lamp (MIL) (service engine soon)
- Seat Belt Warning
- Security System
- Trac-Off (ABS equipped vehicles only)
- Liftgate Ajar

The instrument cluster has a Vacuum Fluorescent (VF) display for the following systems:

- Cruise
- Door (ajar)
- Odometer
- Trac (ABS equipped vehicles only)
- Trip

OPERATION

The gauges are the magnetic air-core type. When the ignition switch is OFF, the gauge pointers should rest at or below the lowest graduation. The instrument cluster may be checked quickly by using the cluster self-diagnostics. Refer to Service Procedures, Instrument Cluster Self-Diagnostics in this section. Also refer to the proper Body Diagnostic Procedures manual for cluster self-diagnostic results.

DIAGNOSIS AND TESTING

AIRBAG WARNING SYSTEM

For testing of this system refer to Restraint Systems, Diagnosis and Testing, Airbag System.

BRAKE SYSTEM WARNING LAMP TEST

The brake warning lamp illuminates when the parking brake is applied with the ignition switch turned to the ON position. The same lamp will also illuminate if one of the two (hydraulic or ABS) service brake systems fail when the brake pedal is applied.

To test the system:

- As the ignition switch is turned to the START position the lamp should light.
- Turn ignition switch to the ON position and apply the parking brake. The lamp should light.

If lamp fails to light inspect for:

- A burned out lamp
- Loose, corroded or damaged socket
- A damaged circuit board
- A broken or disconnected wire at the switch
- Defective switch

To test the service brake warning system, refer to Brakes, Diagnosis and Testing, Base Brake System Diagnosis Charts, Red Brake Warning Lamp.

INSTRUMENT CLUSTER WARNING/INDICATOR LAMPS

Every time the vehicle is switched to the START/RUN position, the cluster goes through a BULB CHECK. This tests most of the indicator lamps and Vacuum Fluorescent (VF) displays. If any of the lamps fail to light during the bulb check, refer to the proper Body Diagnostic Procedures manual. The lamps are not replaceable except for the high beam

DIAGNOSIS AND TESTING (Continued)

indicator, turn signal indicators, and gauge illumination bulbs. Non of these though will illuminate, along with the security indicator, during the bulb check at initial KEY ON.

To diagnose the cluster lamps first place the cluster in self-diagnostic mode. With the ignition switch in the OFF position, press the trip odometer reset button down. Simultaneously turn the ignition key to the ON position and release the trip reset button. All the indicator lamps and VF displays should illuminate except for the fog lamp, turn signal, liftgate ajar, and high beam select indicators.

LOW OIL PRESSURE WARNING LAMP TEST

The low oil pressure warning lamp will illuminate when the ignition switch is turned to the ON position without the engine running. The lamp also illuminates if the engine oil pressure drops below a predetermined safe oil pressure level.

To test the system, turn the ignition switch to the ON position. If the lamp fails to light, inspect for a broken or disconnected wire at the oil pressure switch, located on the rear of the engine. If the wire at the connector checks good, pull the connector loose from the switch and with a jumper wire, ground the connector to the engine. With the ignition switch turned to the ON position, check the warning lamp. If the lamp still fails to light, inspect for a burned out lamp in the cluster. Refer to the proper Body Diagnostic Procedures manual for more in depth testing.

MULTIPLE/INDIVIDUAL GAUGES INOPERATIVE

Test speedometer, tachometer and other gauges for malfunction:

(1) First perform Cluster Self-Diagnostics. Refer to Service Procedures, Instrument Cluster Self-Diagnostics in this section. If there is a response, watch for the effected gauge(s) for operation. Replace cluster as necessary. If there is no response to the cluster self-diagnostics, go to Step 2.

(2) Remove the cluster. Refer to Removal and Installation, Instrument Cluster in this section.

(3) Check for ignition voltage at Pin 14 of the 26-way cluster wire harness connector. Refer to Wiring Diagrams for connector views. Check for battery voltage at Pin 4 of the 26-way connector. If no voltage, repair as necessary.

(4) Check Pin 1 of the 26-way connector for continuity to ground. If no ground, repair as necessary.

(5) If the voltage and ground are OK, and the pins or the connectors are not distorted, replace the instrument cluster. Refer to Removal and Installation, Instrument Cluster in this section.

26-WAY CLUSTER HARNESS CONNECTOR PIN CALL-OUT

CAV.	FUNCTION
1	POWER GROUND
2	LOGIC GROUND
3	PARK LAMP ILLUMINATION FEED
4	BATTERY FEED - M1
5	
6	
7	DOME/MAP/CARGO LAMP
8	
9	DRIVER DOOR AJAR
10	LEFT TURN OUTPUT
11	LEFT TURN SIGNAL INPUT
12	LEFT TURN OUTPUT
13	RIGHT TURN SIGNAL INPUT
14	IGNITION RUN/START
15	SPARE OUTPUT C
16	SPARE OUTPUT B
17	LOW BEAM SENSE
18	HIGH BEAM
19	KEY-IN IGNITION
20	SEAT BELT
21	PARK BRAKE
22	PANEL ILLUMINATION DRIVER
23	PASSENGER DOOR AJAR
24	LIFTGATE AJAR
25	
26	PCI BUS

SERVICE PROCEDURES

INSTRUMENT CLUSTER SELF-DIAGNOSTICS

To put the instrument cluster in Self-Diagnostic Mode, press the trip reset button down and then turn the ignition to the ON position simultaneously, then release the button. The gauges will increment to selected stops and all indicators will light with the exception of the turn signals, liftgate ajar, and fog lamp indicators. The oil lamp will come on when the ignition is turned ON and the engine is OFF. Refer to the proper Body Diagnostic Procedures manual if one or more indicators don't light, or a gauge does not appear to be functioning correctly.

SERVICE PROCEDURES (Continued)

10-WAY CLUSTER HARNESS CONNECTOR PIN CALL-OUT

CAV.	FUNCTION
1	FRONT FOG
2	VEHICLE THEFT/SECURITY SYSTEM (VTSS)
3	SPARE INPUT 5
4	SPARE INPUT 4
5	SPARE INPUT 3
6	REAR FOG
7	PANEL DIMMING LEVEL
8	SPARE INPUT 1
9	FUEL SENSOR
10	SPARE INPUT 2

NOTE: If a vehicle/instrument cluster is received with the instrument cluster gauge pointers on the wrong side of the pointer stops, the cluster "Self-Diagnostics" should be run to reset the pointers. The gauge pointers should then step through the scales and then sweep back to the proper side of the pointer stops.

REMOVAL AND INSTALLATION

ACCESSORY SWITCH BEZEL

NOTE: The accessory switches are serviced separately, but the cigar lighter/power outlet is not.

REMOVAL

(1) Open hood.

(2) Disconnect and isolate the battery negative cable (Fig. 4).

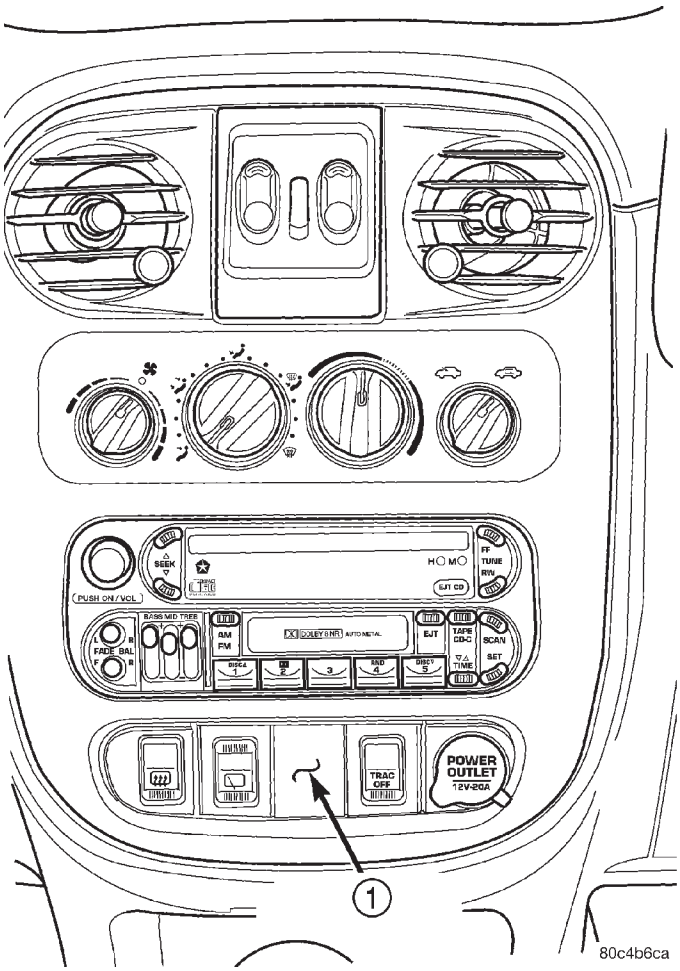

Fig. 3 Accessory Switch Bezel Location

1 – ACCESSORY SWITCH BEZEL

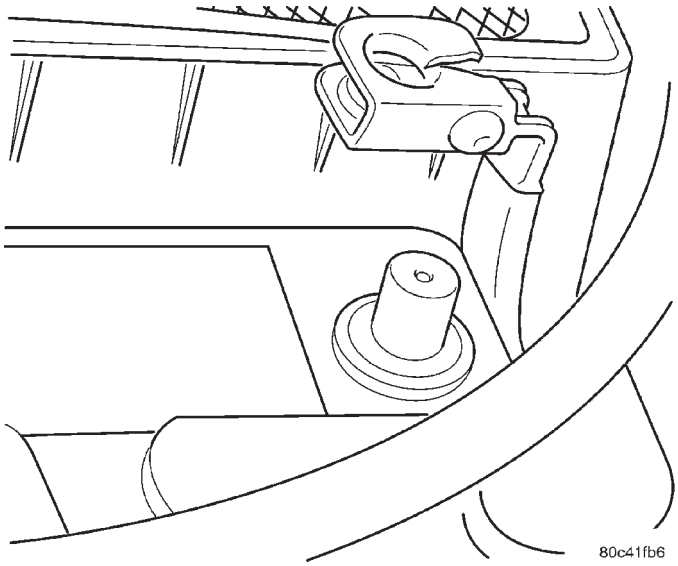

Fig. 4 Disconnect and Isolate Battery Negative Cable

REMOVAL AND INSTALLATION (Continued)

(3) Remove the instrument panel center bezel. Refer to Removal and Installation, Instrument Panel Center Bezel in this section.

(4) Remove two screws retaining the accessory switch bezel (Fig. 5).

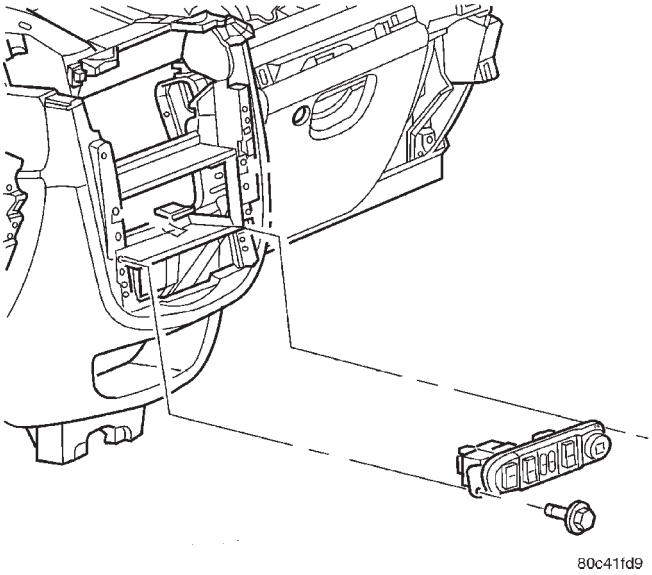

Fig. 5 Accessory Switch Bezel Remove/Install

(5) Disconnect the harness connectors to the following (Fig. 6):

- Rear Window Defogger Switch (if equipped)
- Traction Control Switch (if equipped)
- Cigar Lighter/Power Outlet
- Rear Windshield Washer/Wiper Switch

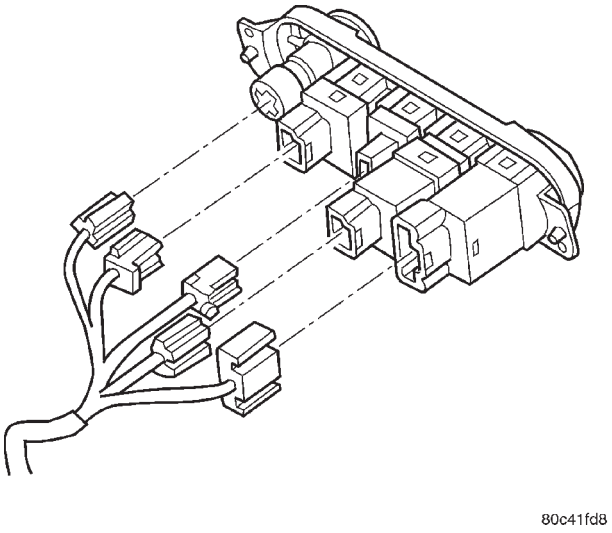

Fig. 6 Accessory Switch Bezel Connectors Remove/Install

(6) To remove switches from bezel, use both thumbs and slightly pull out on the two walls that are holding the switches (Fig. 7).

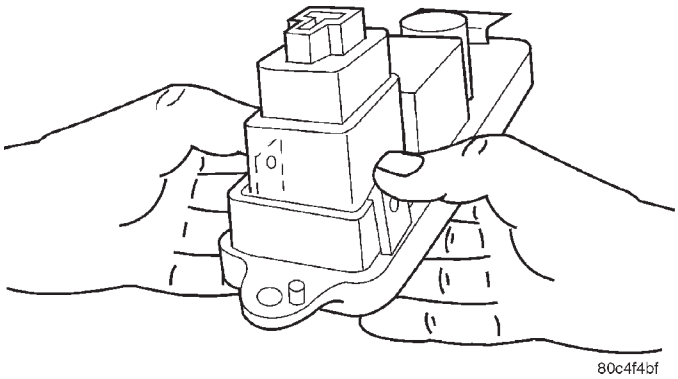

Fig. 7 Accessory Switch Bezel Switch Remove/ Install - Typical

INSTALLATION

If replacing the accessory switch bezel, you must transfer the switches to the new bezel.

(1) Reconnect accessory switch bezel connectors (Fig. 6).

(2) Reinstall switch bezel into instrument panel opening and install two retaining screws (Fig. 5).

(3) Reinstall instrument panel center bezel. Refer to Removal and Installation, Instrument Panel Center Bezel in this section.

(4) Reconnect the battery negative cable (Fig. 4).

(5) Close the hood.

(6) Verify vehicle and system operation.

A/C OUTLET HOUSING

CLUSTER BEZEL MOUNTED

REMOVAL

(1) Open hood.

(2) Disconnect and isolate the battery negative cable (Fig. 4).

(3) Remove the instrument panel top cover. Refer to Removal and Installation, Instrument Panel Top Cover in this section.

(4) Remove the left lower instrument panel bezel. Refer to Removal and Installation, Left Lower Instrument Panel Bezel in this section.

(5) Remove the left instrument panel end cap. Refer to Removal and Installation, Instrument Panel End Cap in this section.

(6) Grab the sides of the instrument cluster bezel and gently give a quick pull to unsnap the cluster bezel (Fig. 19).

(7) Disconnect the turn signal lamps from the instrument cluster bezel (Fig. 20).

(8) Remove bezel from vehicle.

(9) Remove the three retaining screws to the cluster bezel mounted a/c outlet housing and remove.

REMOVAL AND INSTALLATION (Continued)

INSTALLATION

(1) Install the three retaining screws to the cluster bezel mounted a/c outlet housing.

(2) Place the cluster bezel near the instrument cluster and insert the turn signal lamps into the instrument cluster bezel (Fig. 20).

(3) Position instrument cluster bezel in position making sure all fasteners are lined up with their respective slots.

(4) Gently, but forcefully, snap the instrument cluster bezel into place (Fig. 19).

(5) Install the left instrument panel end cap. Refer to Removal and Installation, Instrument Panel End Cap in this section.

(6) Install the left lower instrument panel bezel. Refer to Removal and Installation, Left Lower Instrument Panel Bezel in this section.

(7) Install the instrument panel top cover. Refer to Removal and Installation, Instrument Panel Top Cover in this section.

(8) Connect the battery negative cable (Fig. 4).

(9) Close the hood.

(10) Verify vehicle and system operation.

PASSENGER OUTBOARD PANEL MOUNTED

REMOVAL

(1) Open hood.

(2) Disconnect and isolate the battery negative cable (Fig. 4).

(3) Remove the passenger side airbag module. Refer to Restraint Systems Removal and Installation, Passenger Side Airbag Module.

(4) Remove the three retaining screws to the passenger outboard panel mounted a/c outlet housing and remove.

INSTALLATION

(1) Install the three retaining screws to the passenger outboard panel mounted a/c outlet housing.

(2) Reinstall the passenger side airbag module. Refer to Restraint Systems Removal and Installation, Passenger Side Airbag Module.

(3) Reconnect the battery negative cable (Fig. 4).

(4) Close the hood.

(5) Verify vehicle and system operation.

CENTER CONSOLE FLOOD LAMP

REMOVAL

(1) Open hood.

(2) Disconnect and isolate the battery negative cable (Fig. 4).

(3) Insert a small screwdriver into notch by clip (Fig. 8) and gently pry out unit.

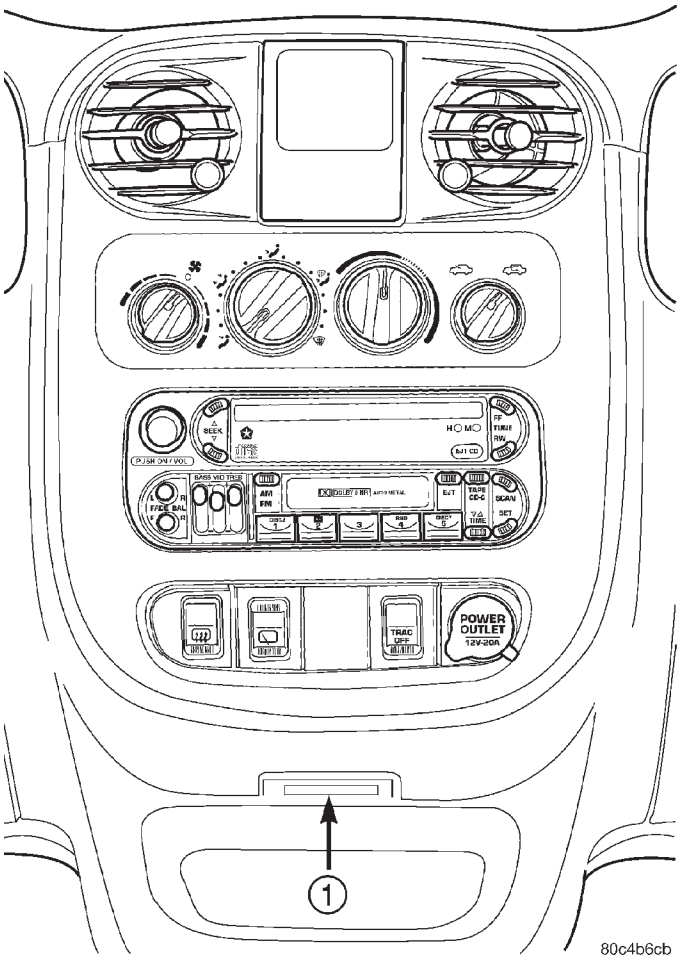

Fig. 8 Center Console Flood Lamp Location

1 – CENTER CONSOLE FLOOD LAMP

(4) Slide back rear cover to expose bulb.

(5) Replace bulb.

REMOVAL AND INSTALLATION (Continued)

INSTALLATION

(1) Insert new bulb.
(2) Gently secure bulb back into slot.

NOTE: When installing the retainer, ensure that the forward tabs are inserted properly into the slots in the instrument panel.

(3) Connect the battery negative cable (Fig. 4).
(4) Close hood.
(5) Verify vehicle and system operation.

CLUSTER AREA SUPPORT PANEL

CAUTION: DO NOT turn cluster upside down for longer than 30 minutes (preferably NEVER). This can result in dampening fluid within the gauge pointer assembly to leak causing permanent damage to the instrument cluster gauges.

DO NOT expose the instrument cluster to direct sunlight for extended periods of time. Any overexposure to direct sunlight permanently warps the internal mask of the instrument cluster, causing the pointers to stick. It is acceptable to store the instrument cluster on the floor of the vehicle, gauges facing up, out of direct sunlight.

DO NOT do an electrical "HOT SWAP" when replacing or testing clusters. Ensure that the ignition is OFF with the M1 fuse removed, or the battery negative cable is disconnected. Partial mating of the cluster connector circuits can damage and/or destroy the cluster microprocessor if power is available.

DO NOT swap clusters between vehicles. The instrument cluster has learned information stored in its microprocessor for Airbags, Anti-Lock Brakes, Cruise, and Smart Key Immobilizer. Swapping clusters between cars, may result in the improper illumination of cluster indicators associated with the above features.

REMOVAL

(1) Open hood.
(2) Disconnect and isolate the battery negative cable (Fig. 4).
(3) Remove the instrument cluster bezel. Refer to Removal and Installation, Instrument Cluster Bezel in this section.
(4) Remove four screws to the instrument cluster (Fig. 16) and pull straight back to release off of self-docking connectors (Fig. 17).
(5) Remove the four screws to the cluster area support panel (Fig. 9).
(6) Lift out of instrument panel and release self-docking connectors from panel.
(7) Remove panel from vehicle.

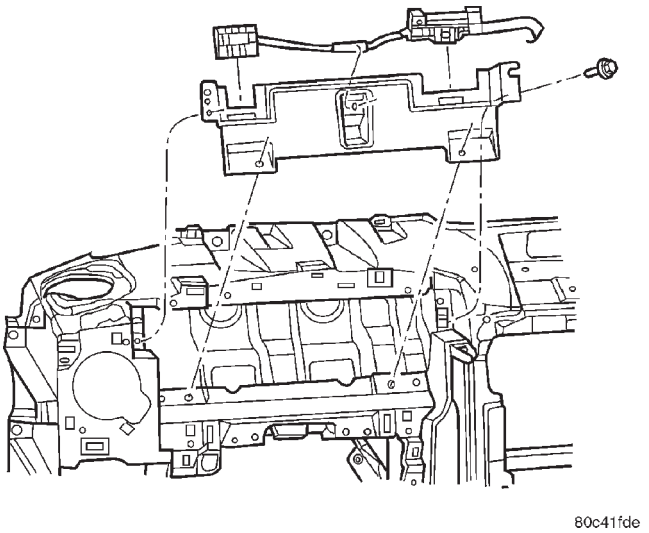

Fig. 9 Cluster Area Support Panel Remove/Install

INSTALLATION

(1) Install self-docking connectors on panel.
(2) Install panel to instrument panel with four screws (Fig. 9).
(3) Align the cluster over the self-docking connectors and push firmly into place until seated.
(4) Install four screws to the instrument cluster (Fig. 16) and pull straight back to release off of self-docking connectors (Fig. 17).
(5) Install the instrument cluster bezel. Refer to Removal and Installation, Instrument Cluster Bezel in this section.
(6) Connect the battery negative cable (Fig. 4).
(7) Close hood.
(8) Verify vehicle and system operation.

GLOVE BOX ASSEMBLY

REMOVAL

(1) Open front passenger door.
(2) Open glove box door, push in on box/bin sides to release the glove box.
(3) Allow the glove box to drop down. With a firm quick motion, pull the glove box assembly straight down off the hinge pivots.

INSTALLATION

(1) Place glove box assembly in position and make sure the orientation of the hinge is correct and snap glove box assembly hinge into place (Fig. 10).
(2) Lift glove box assembly up, push in on the box/bin sides to allow the glove box to pass by the instrument panel.
(3) Close glove box.
(4) Shut passenger door.

REMOVAL AND INSTALLATION (Continued)

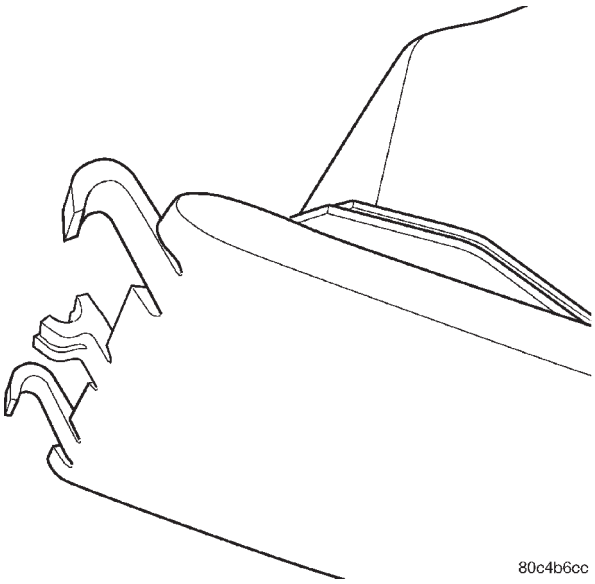

Fig. 10 Glove Box Assembly Hinge

GLOVE BOX DOOR/BIN/LATCH

REMOVAL

(1) Open front passenger door.

(2) Remove glove box assembly. Refer to Removal and Installation, Glove Box Assembly in this section.

(3) With glove box assembly on bench, remove eleven glove box assembly screws (Fig. 11).

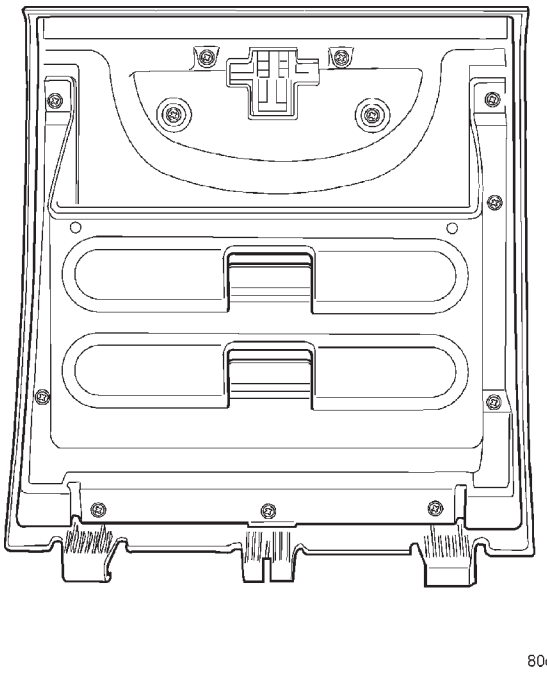

Fig. 11 Glove Box Assembly Screws

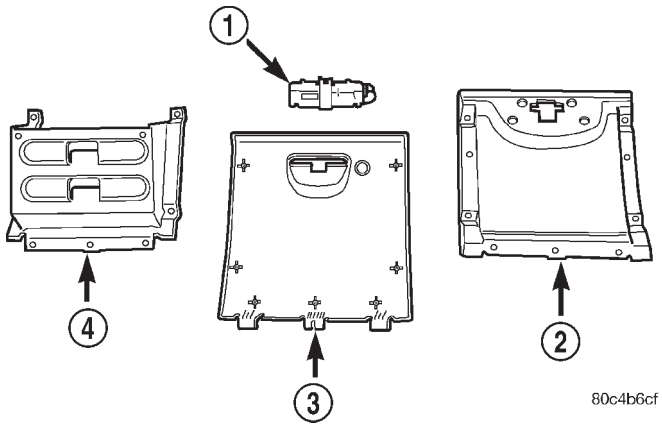

Fig. 12 Glove Box Assembly Breakdown

1 – LATCH
2 – INNER DOOR
3 – OUTER DOOR
4 – BOX

INSTALLATION

(1) Reassemble glove box assembly (Fig. 11) and (Fig. 12).

(2) Install glove box assembly. Refer to Removal and Installation, Glove Box Assembly in this section.

(3) Close passenger door.

GLOVE BOX LOCK CYLINDER

REMOVAL

(1) Open passenger door.

(2) Remove and disassemble glove box assembly. Refer to Removal and Installation, Glove Box Door/Bin/Latch in this section.

(3) Insert key into glove box lock cylinder. Using a small pocket screwdriver or equivalent, push in on retaining tab as you turn the lock cylinder 90° and pull out lock cylinder (Fig. 13) and (Fig. 14).

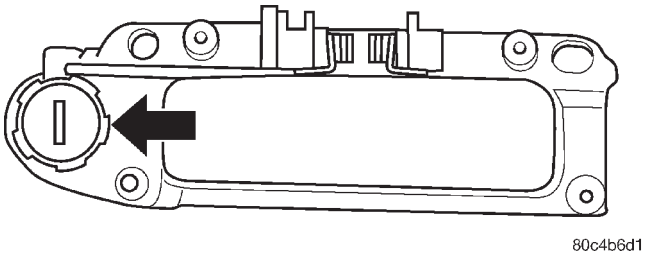

Fig. 13 Glove Box Lock Cylinder Release Tab Location

REMOVAL AND INSTALLATION (Continued)

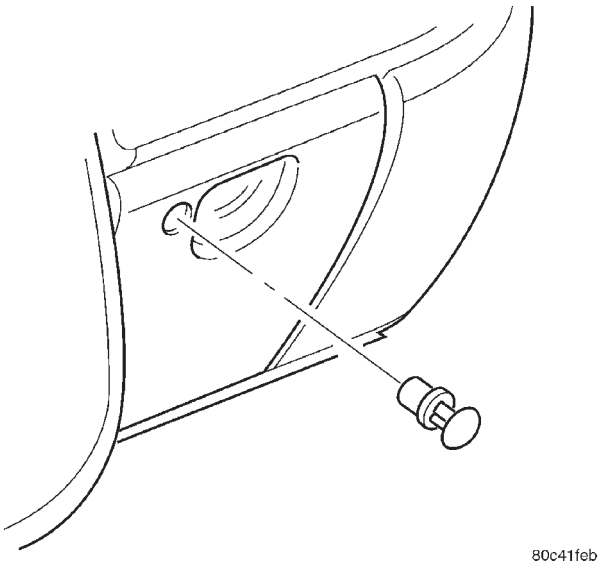

Fig. 14 Glove Box Lock Cylinder Remove/Install

INSTALLATION

(1) Insert key into lock cylinder.

(2) Push lock cylinder into latch and turn to straight up and down position.

(3) Remove key.

(4) Reassemble glove box assembly and reinstall into vehicle. Refer to Removal and Installation, Glove Box Door/Bin/Latch in this section.

HVAC CONTROL

REMOVAL

(1) Open hood.

(2) Disconnect and isolate the battery negative cable (Fig. 4).

(3) Using a trim stick or equivalent, gently pry out the front power window switch from the instrument panel center bezel. Disconnect the harness connector and remove (Fig. 29).

(4) Remove the one center bezel retaining screw (Fig. 31).

(5) Pull off the HVAC control knobs (Fig. 30).

(6) Using a trim stick or equivalent, gently pry off the center bezel and remove (Fig. 31).

(7) Remove two screws retaining HVAC control.

(8) Pull the HVAC control out of instrument panel.

(9) Disconnect the one wiring connector, one vacuum harness connector, and the two control cables.

(10) Remove control head from vehicle.

INSTALLATION

(1) Place the HVAC control in the instrument panel opening.

(2) Connect two control cables.

(3) Connect the vacuum harness connector.

(4) Connect the one wiring connector.

(5) Install the two screws retaining the HVAC control head.

(6) Place the center bezel into position, lining up the fasteners with the slots and snap into place.

(7) Install the HVAC control knobs.

(8) Install the one center bezel retaining screw.

(9) Connect the harness connector to the front power window switch. Align the front power window switch into the instrument panel center bezel opening and snap into place.

(10) Connect the battery negative cable (Fig. 4).

(11) Close hood.

(12) Verify vehicle and system operation.

HVAC CONTROL KNOBS

REMOVAL

(1) Open door.

(2) Pull off the HVAC control knobs (Fig. 15).

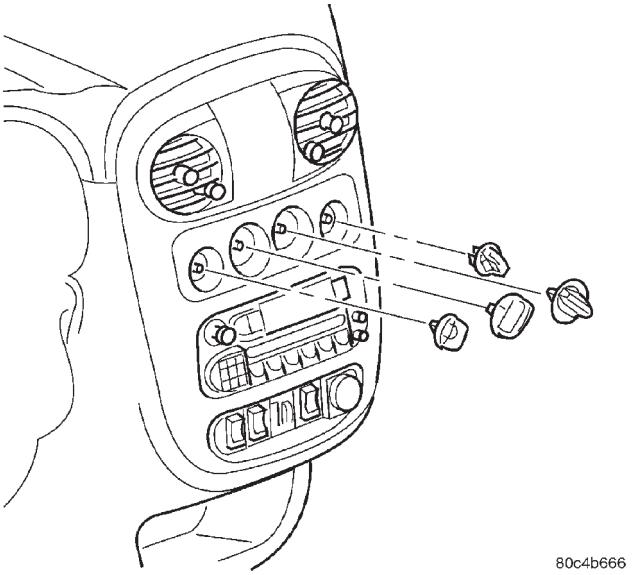

Fig. 15 HVAC Control Knobs Remove/Install

INSTALLATION

(1) Install the HVAC control knobs (Fig. 15).

(2) Close door.

(3) Verify vehicle and system operation.

REMOVAL AND INSTALLATION (Continued)

INSTRUMENT CLUSTER/MASK and LENS

CAUTION: DO NOT turn cluster upside down for longer than 30 minutes (preferably NEVER). This can result in dampening fluid within the gauge pointer assembly to leak causing permanent damage to the instrument cluster gauges.

DO NOT expose the instrument cluster to direct sunlight for extended periods of time. Any overexposure to direct sunlight permanently warps the internal mask of the instrument cluster, causing the pointers to stick. It is acceptable to store the instrument cluster on the floor of the vehicle, gauges facing up, out of direct sunlight.

DO NOT do an electrical "HOT SWAP" when replacing or testing clusters. Ensure that the ignition is OFF with the M1 fuse removed, or the battery negative cable is disconnected. Partial mating of the cluster connector circuits can damage and/or destroy the cluster microprocessor if power is available.

DO NOT swap clusters between vehicles. The instrument cluster has learned information stored in its microprocessor for Airbags, Anti-Lock Brakes, Cruise, and Smart Key Immobilizer. Swapping clusters between cars, may result in the improper illumination of cluster indicators associated with the above features.

REMOVAL

(1) Open hood.

(2) Disconnect and isolate the battery negative cable (Fig. 4).

(3) Remove the instrument cluster bezel. Refer to Removal and Installation, Instrument Cluster Bezel in this section.

(4) Remove four screws to the instrument cluster (Fig. 16) and pull straight back to release off of self-docking connectors (Fig. 17).

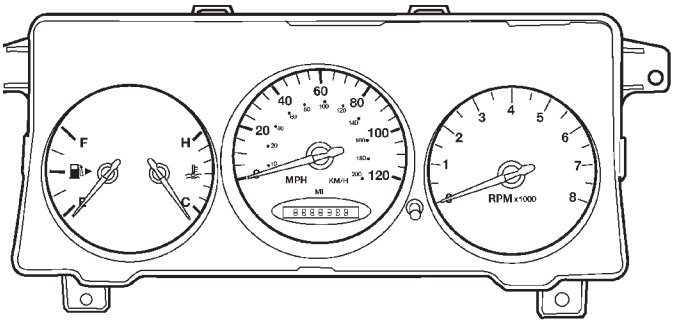

80c4b6c8

Fig. 16 Instrument Cluster

MASK/LENS REMOVE/INSTALL

(1) To separate the mask/lens from the cluster housing, depress the locking tabs, starting at one point and working all the way around the cluster, and then pull up on the mask/lens (Fig. 18). To install new mask/lens, just place in position and snap together.

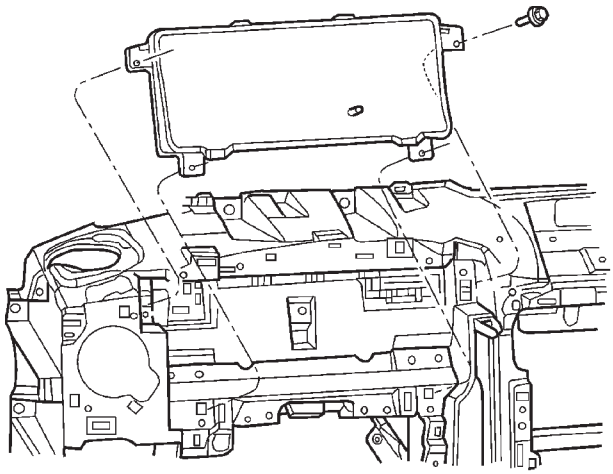

80c41fdf

Fig. 17 Instrument Cluster Remove/Install

INSTALLATION

(1) Align the cluster over the self-docking connectors and push firmly into place until seated.

(2) Install four screws to the instrument cluster (Fig. 16) and pull straight back to release off of self-docking connectors (Fig. 17).

(3) Install the instrument cluster bezel. Refer to Removal and Installation, Instrument Cluster Bezel in this section.

(4) Connect the battery negative cable (Fig. 4).

(5) Close hood.

(6) Verify vehicle and system operation.

INSTRUMENT CLUSTER BEZEL

REMOVAL

(1) Open hood.

(2) Disconnect and isolate the battery negative cable (Fig. 4).

(3) Remove the instrument panel top cover. Refer to Removal and Installation, Instrument Panel Top Cover in this section.

(4) Remove the left lower instrument panel bezel. Refer to Removal and Installation, Left Lower Instrument Panel Bezel in this section.

(5) Remove the left instrument panel end cap. Refer to Removal and Installation, Instrument Panel End Cap in this section.

(6) Grab the sides of the instrument cluster bezel and gently give a quick pull to unsnap the cluster bezel (Fig. 19).

(7) Disconnect the turn signal lamps from the instrument cluster bezel (Fig. 20).

(8) Remove bezel from vehicle.

If replacing the instrument cluster bezel, the A/C outlet housing assembly must be transferred to the new bezel. Refer to Removal and Installation, A/C Outlet Housing Assembly in this section.

REMOVAL AND INSTALLATION (Continued)

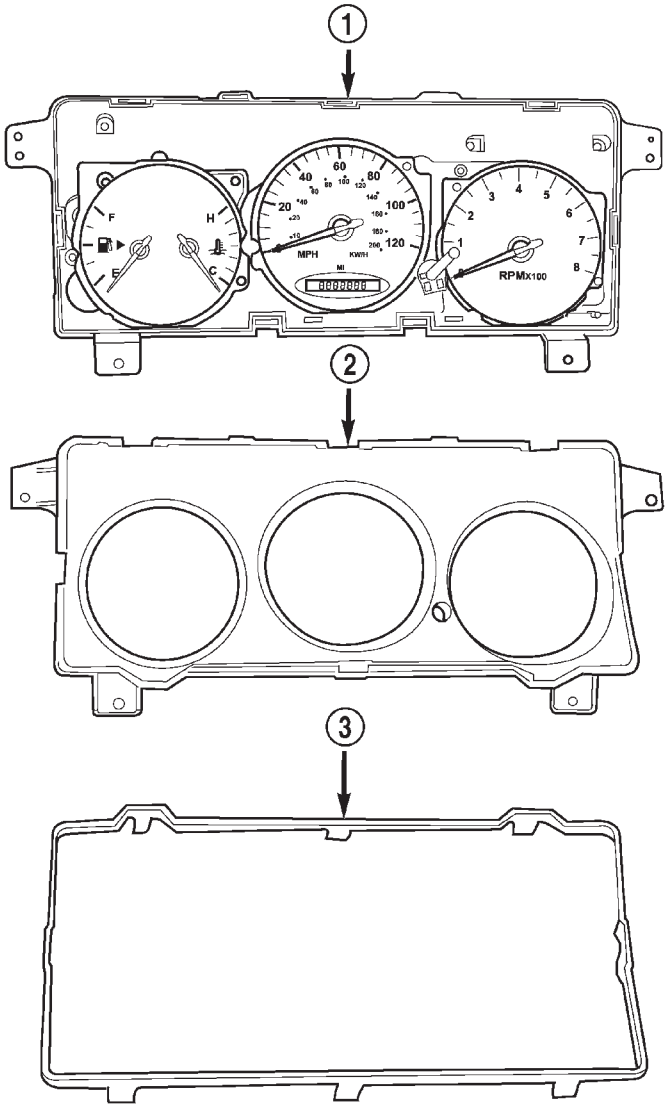

80c4b6c9

Fig. 18 Instrument Cluster Breakdown

1 – CLUSTER
2 – MASK
3 – LENS

INSTALLATION

(1) Insert turn signal lamps into the instrument cluster bezel (Fig. 20).

(2) Position instrument cluster bezel in position making sure all fasteners are lined up with their respective slots.

(3) Gently, but forcefully, snap the instrument cluster bezel into place (Fig. 19).

(4) Install the left instrument panel end cap. Refer to Removal and Installation, Instrument Panel End Cap in this section.

(5) Install the left lower instrument panel bezel. Refer to Removal and Installation, Left Lower Instrument Panel Bezel in this section.

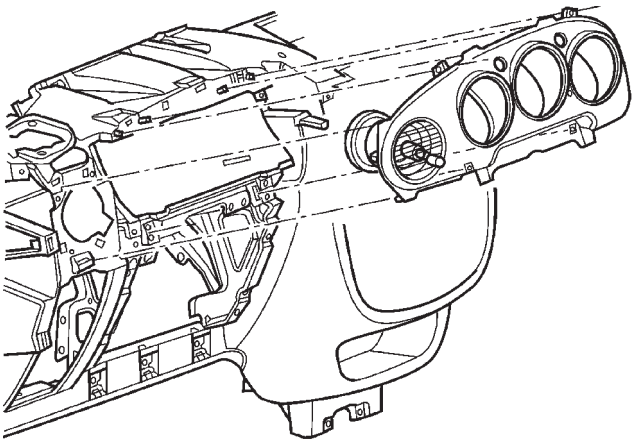

80c41fdc

Fig. 19 Instrument Cluster Bezel Remove/Install

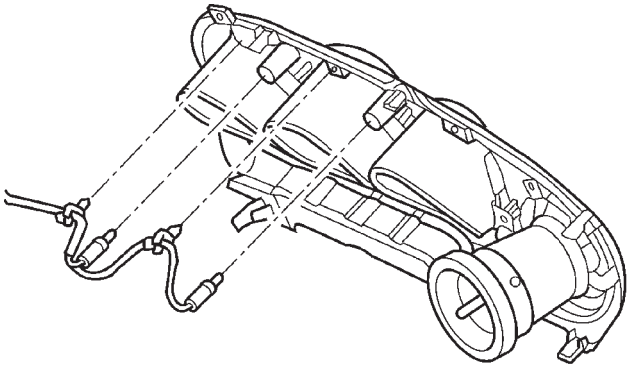

80c41fda

Fig. 20 Turn Signal Indicator Lamps Remove/Install

(6) Install the instrument panel top cover. Refer to Removal and Installation, Instrument Panel Top Cover in this section.

(7) Connect the battery negative cable (Fig. 4).

(8) Close the hood.

(9) Verify vehicle and system operation.

INSTRUMENT CLUSTER LAMPS

WARNINGS/INDICATORS

The instrument cluster warning/indicator lamps are not serviceable except for the turn signals (Fig. 21) and the high beam indicator (Fig. 22). The instrument cluster must first be removed. Refer to Instrument Cluster Removal and Installation in this section. Then the defective bulb and socket turns out. If any of the other indicators are burned out, the entire cluster must be replaced.

ILLUMINATION LAMPS

The illumination bulbs (Fig. 22) are serviceable. The instrument cluster must first be removed, refer to

REMOVAL AND INSTALLATION (Continued)

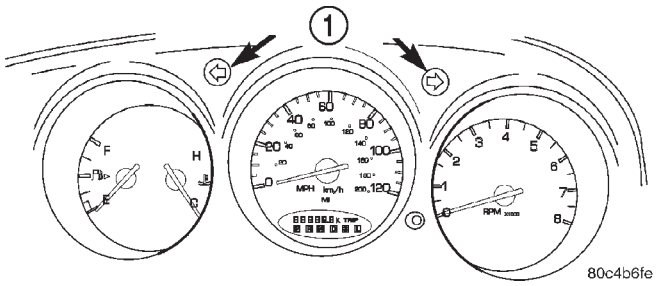

Fig. 21 Turn Signal Indicator Lamps

1 – TURN SIGNAL INDICATORS

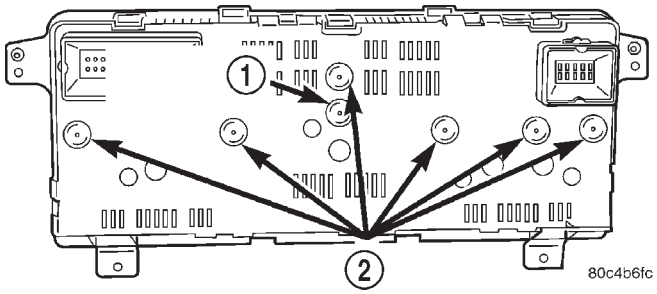

Fig. 22 Instrument Cluster Service Bulbs

1 – HIGH BEAM INDICATOR
2 – ILLUMINATION BULBS

Instrument Cluster Removal and Installation in this section. Then the defective bulb and socket turns out.

INSTRUMENT PANEL ASSEMBLY

REMOVAL

(1) Open hood.

(2) Disconnect and isolate the battery negative cable (Fig. 4).

(3) Remove the instrument panel top cover.

(a) Using a trim stick (special tool #C-4755) or equivalent, gently pry off the left and right A-pillar trim.

(b) Using a trim stick or equivalent, gently pry out the front power window switch from the instrument panel center bezel. Disconnect the harness connector and remove.

(c) Remove the one center bezel retaining screw.

(d) Pull off the HVAC control knobs.

(e) Using a trim stick or equivalent, gently pry off the center bezel and remove.

(f) Remove the two top cover retaining screws.

(g) Gently pull rearward on the top cover and unlatch it from the instrument panel and remove.

(4) Remove two screws retaining HVAC control.

(5) Pull the HVAC control out of instrument panel, disconnect the one wiring connector, the one vacuum harness connector, and disconnect the two control cables. Remove HVAC control from vehicle.

(6) Remove the two retaining screws to the upper and lower steering column shrouds.

(7) Gently pry the upper and lower shrouds apart and remove from steering column.

(8) Remove the left lower instrument panel bezel. Pull top rearward, lower to floor and with a quick pulling motion remove off instrument panel.

(9) Disconnect the steering column wire connectors:

(a) Ignition Switch

(b) Multi-Function Switch

(c) Clockspring

CAUTION: Lock the steering wheel in the straight ahead position. This will prevent clockspring damage when the steering wheel rotates freely.

(10) Remove steering column:

(a) Remove the steering column pinch bolt at the base of the lower coupler.

(b) Remove the four retaining nuts to the steering column.

(c) Pull column rearward and out of instrument panel opening and remove from vehicle.

(11) Remove the two brake pedal support bracket, instrument panel retaining bolts (Fig. 23).

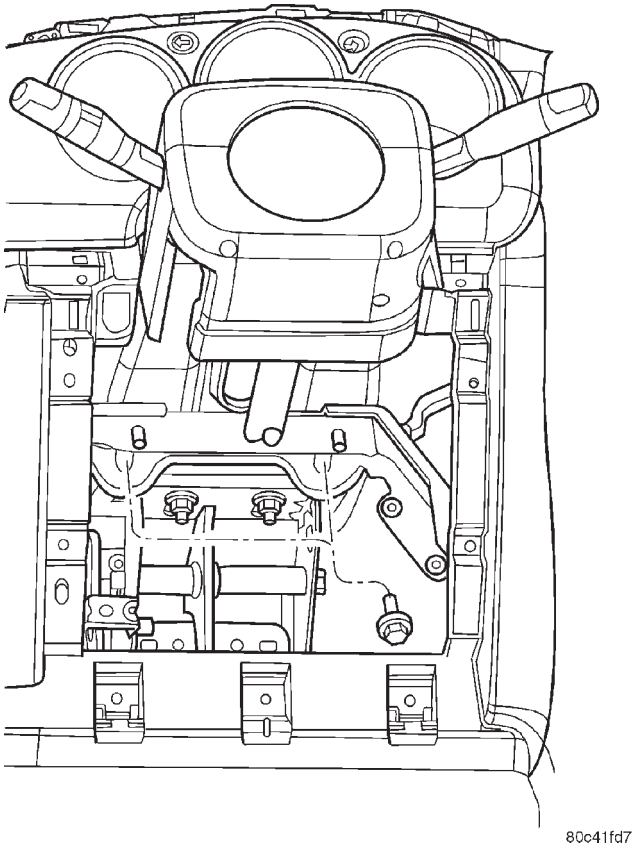

Fig. 23 Brake Pedal Support Bracket, Instrument Panel Retaining Bolts Remove Install

(12) Remove two screws to the left instrument panel end cap.

(13) Pull the left end cap rearward to unsnap and remove it from vehicle.

(14) Disconnect the five left side wiring connectors:

REMOVAL AND INSTALLATION (Continued)

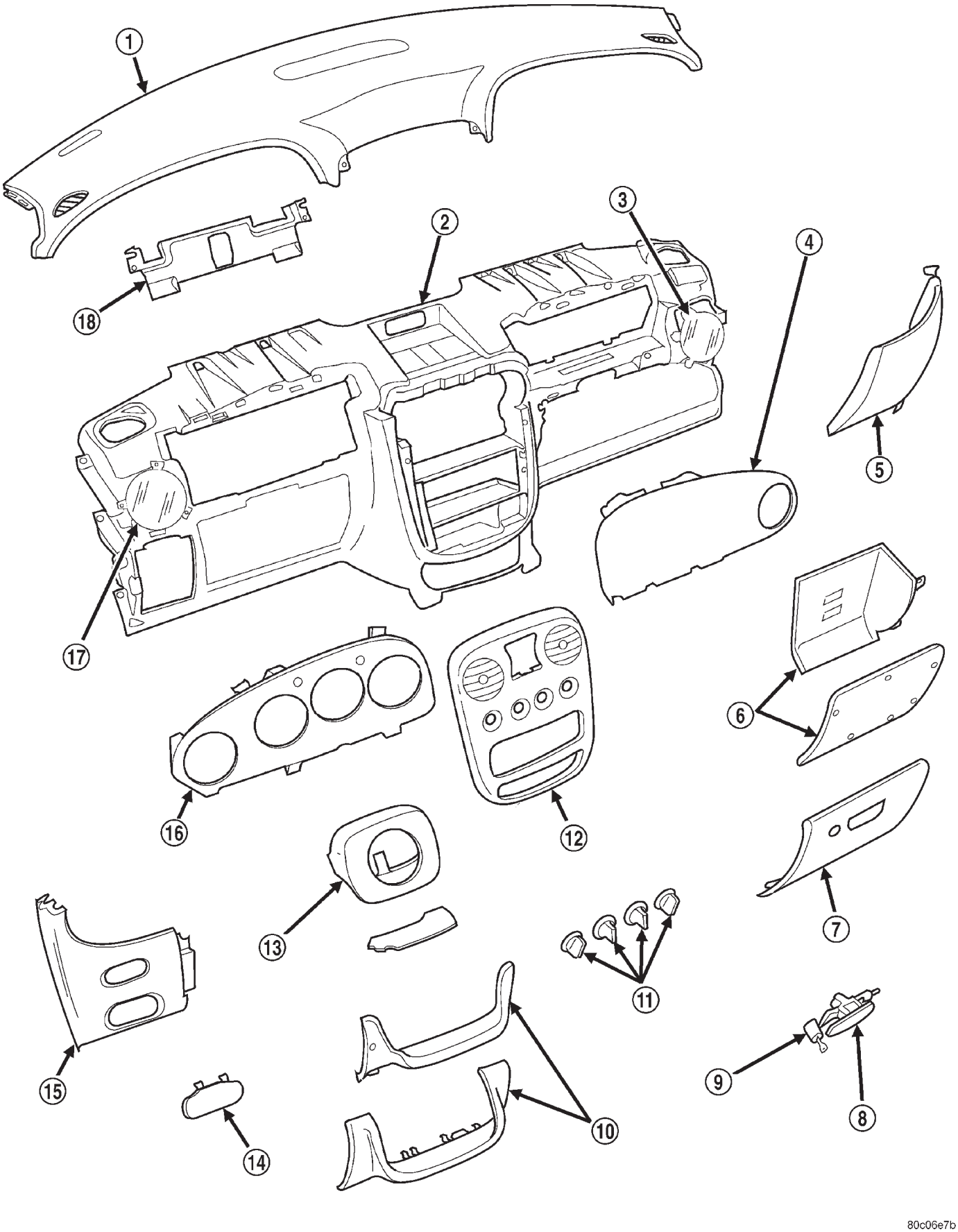

Fig. 24 Instrument Panel Assembly

REMOVAL AND INSTALLATION (Continued)

1 – COVER, INSTRUMENT PANEL TOP
2 – ASSEMBLY, INSTRUMENT PANEL
3 – HOUSING, INSTRUMENT PANEL OUTBOARD A/C OUTLET ASSEMBLY
4 – MODULE, PASSENGER AIRBAG COVER, PASSENGER AIRBAG MODULE
5 – ENDCAP, INSTRUMENT PANEL
6 – BOX, INSTRUMENT PANEL GLOVE BOX ASSEMBLY
7 – DOOR, INSTRUMENT PANEL GLOVE BOX
8 – LATCH, INSTRUMENT PANEL GLOVE BOX ASSEMBLY
9 – CYLINDER, LOCK
10 – BEZEL, INSTRUMENT PANEL LOWER
11 – KNOBS, A/C CONTROL ASSEMBLY
12 – BEZEL, INSTRUMENT PANEL CENTER
13 – SHROUD, STEERING COLUMN
14 – COVER, FUSES
15 – ENDCAP, INSTRUMENT PANEL
16 – BEZEL, INSTRUMENT CLUSTER
17 – HOUSING, INSTRUMENT PANEL CLUSTER BEZEL A/C OUTLET ASSEMBLY
18 – PANEL, CLUSTER AREA SUPPORT

(a) Data Link Connector
(b) Two main instrument panel connectors.
(c) Brake Switch
(d) Left Side Body Harness
(e) Left Door Harness

(15) Remove the three left side A-pillar, instrument panel retaining bolts (Fig. 25).

(16) Remove two retaining bolts at the left side of the center support bracket (Fig. 26).

(17) Remove four screws to center console.

(18) Using a trim stick or equivalent, gently pry rear power window switch out of console and disconnect wiring and remove.

(19) Pull parking brake handle all the way up.

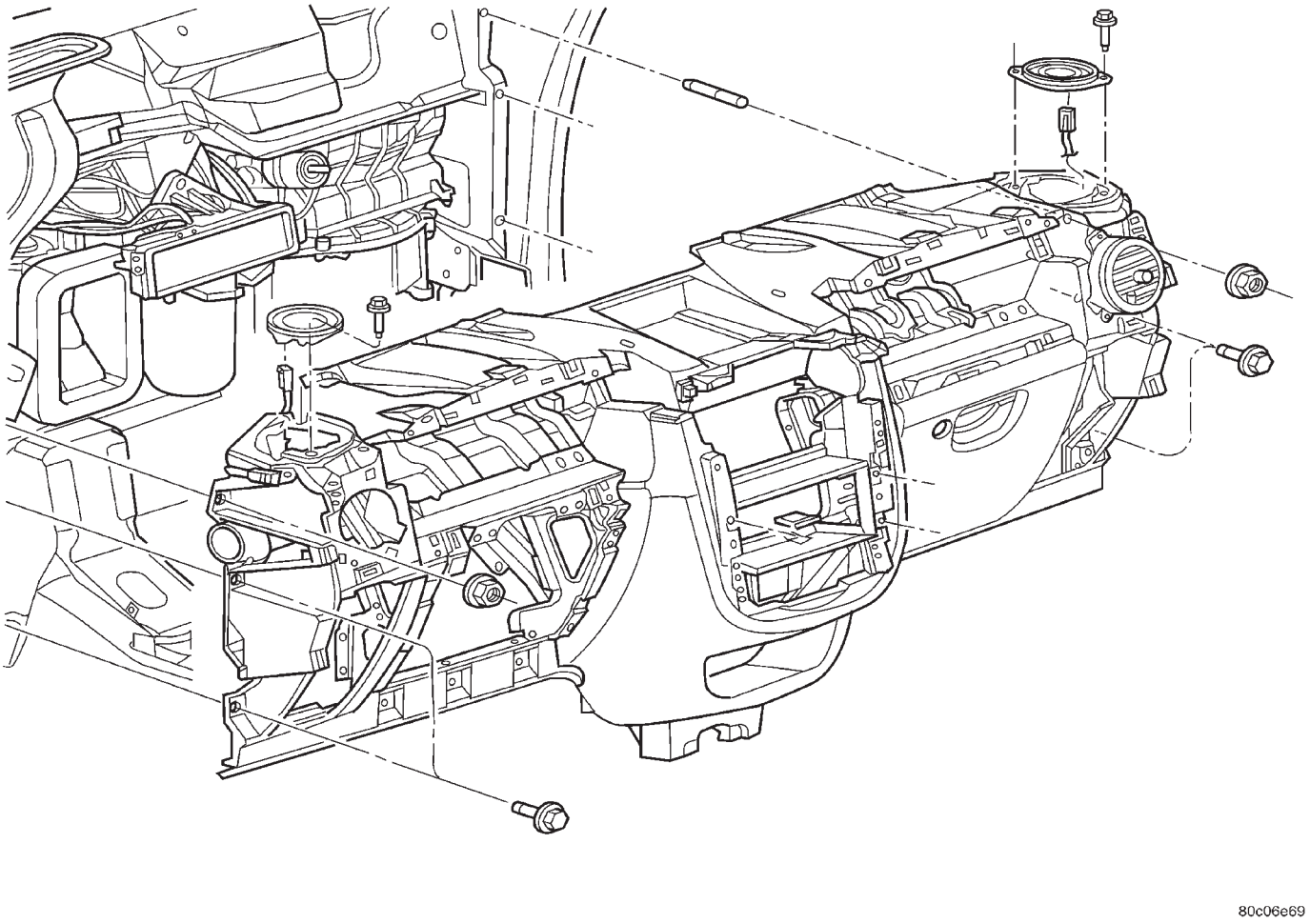

Fig. 25 Instrument Panel A-Pillar Retaining Bolts

REMOVAL AND INSTALLATION (Continued)

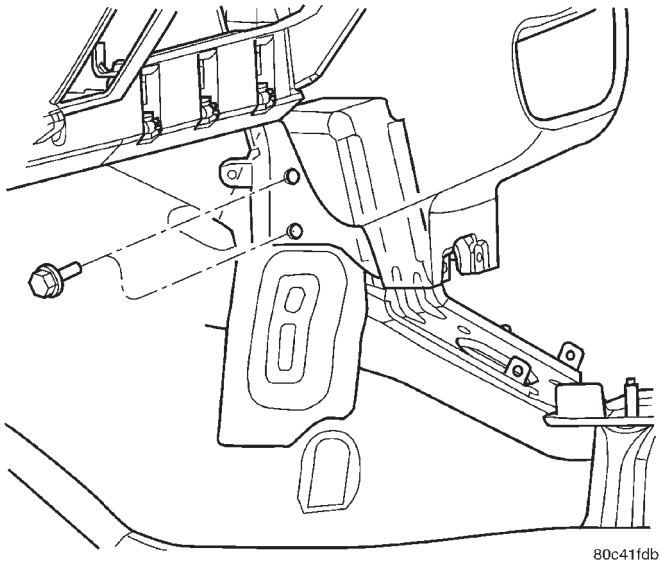

Fig. 26 Instrument Panel Center Support Retaining Bolts

(20) Lift up the front of the center console to gain access to the power outlet connector.

(21) Disconnect one wire connector to console mounted auxiliary power outlet.

(22) Pull up on rear of console first to clear parking brake handle and remove from vehicle.

(23) If equipped with an automatic, remove the shifter handle and shifter bezel.

(a) **Shifter Handle** - Loosen the set screw retaining the shifter handle and pull up on handle to remove.

(b) **Shifter Bezel** - Pull upward on edge of shifter bezel, disconnect the illumination lamp and remove bezel.

(24) Disconnect and remove the two remaining center console wiring connectors:

(a) Occupant Restraint Controller (ORC) connector

(b) Park Brake Switch connector

(25) Remove two retaining bolts at the right side of the center support bracket (Fig. 26).

NOTE: The center console wiring is routed underneath the rear floor heat duct. Loosen the retainers holding down the heat duct and you can maneuver the wiring from underneath it without removal.

(26) Remove glove box assembly:

(a) Open glove box and push in on the sides of the glove box bin to allow the retainers to clear the instrument panel.

(b) Let the glove box drop down and give it quick pull downward to disengage the hinge.

(27) Remove two screws to the right instrument panel end cap.

(28) Pull end cap rearward to unsnap and remove from vehicle.

(29) Remove the two right side A-pillar, instrument panel retaining bolts and one nut (Fig. 25).

(30) Disconnect the right side instrument panel wire connectors:

(a) Antenna

(b) Overhead Systems (Fig. 27)

(c) Blower Motor

(d) Left Door Harness

(e) Body Harness

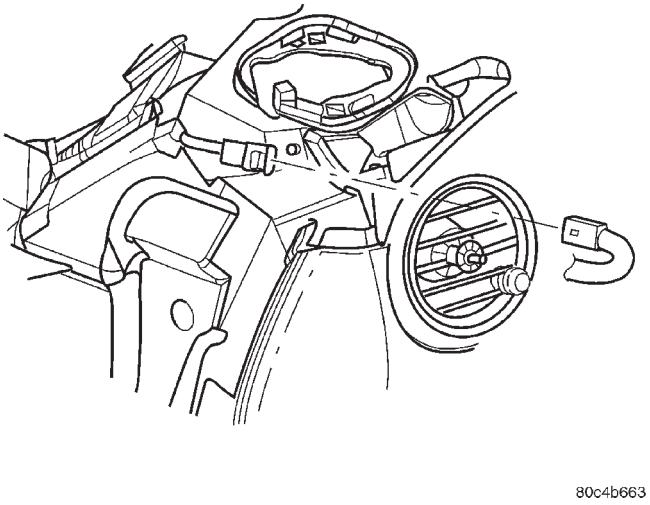

Fig. 27 Instrument Panel to Overhead Systems Jumper Harness Connector - Typical Left or Right

(31) Remove the four fence line instrument panel retaining bolts (Fig. 28).

(32) With the help of an assistant, carefully remove the instrument panel from the vehicle being careful not to damage the instrument panel or vehicle interior.

NOTE: If the instrument panel is being replaced, all the components left on the assembly must be transferred.

This would include:

- Passenger Airbag
- Instrument Cluster and Bezel
- Cluster Area Support Panel
- Remote Keyless Entry Module (if equipped)
- Radio
- Accessory Switch Bezel
- Left and Right Instrument Panel Speakers
- Instrument Panel Wire Harness
- Right Instrument Panel A/C Outlet Housing Assembly
- All A/C and Heat Duct work and Plumbing

REMOVAL AND INSTALLATION (Continued)

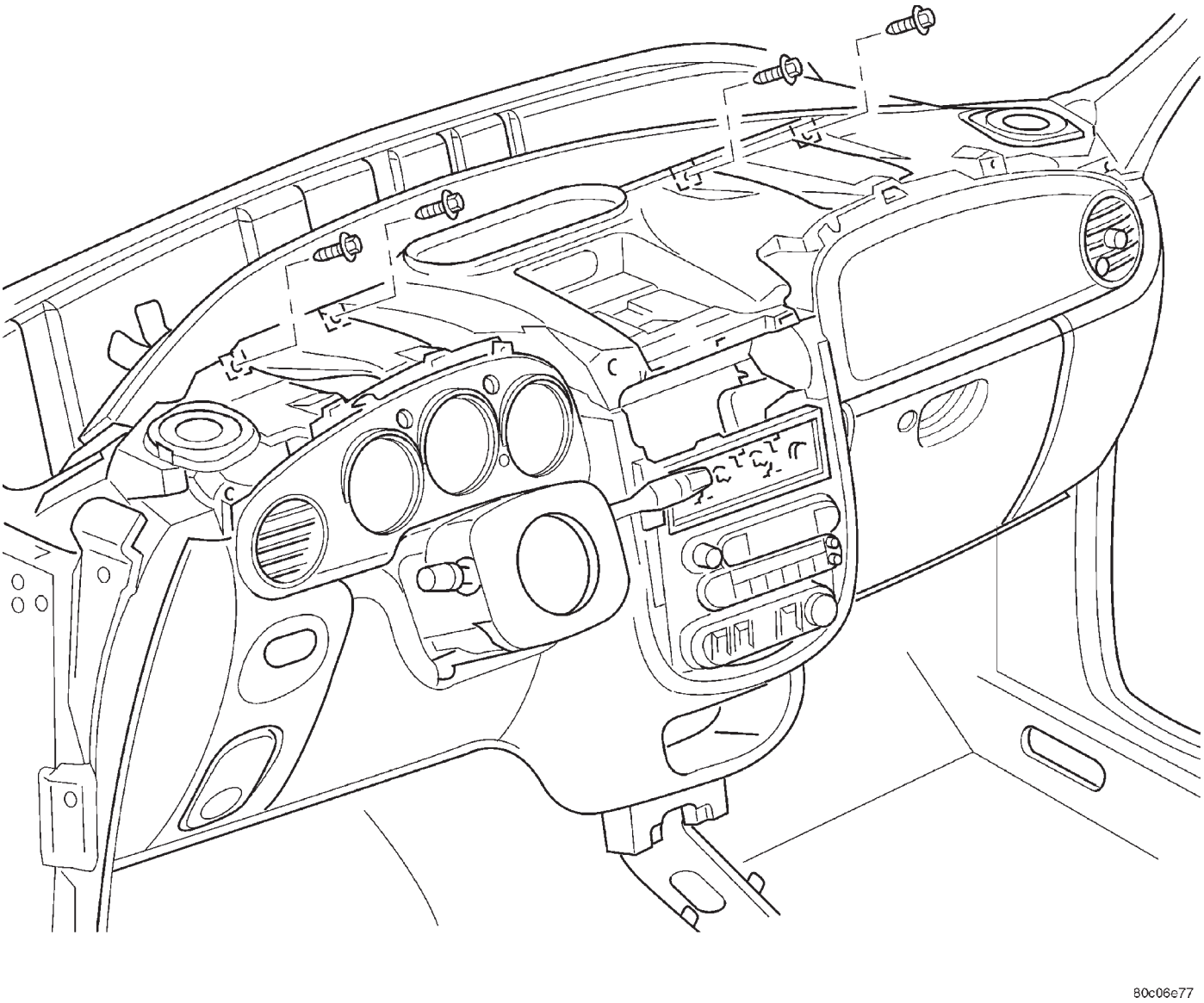

Fig. 28 Instrument Panel Fence Line Retaining Bolts

INSTALLATION

(1) With the help of an assistant, carefully install the instrument panel in the vehicle being careful not to damage the instrument panel or vehicle interior.

(2) Install the four fence line instrument panel retaining bolts (Fig. 28).

(3) Connect the right side instrument panel wire connectors:

(a) Antenna
(b) Overhead Systems (Fig. 27)
(c) Blower Motor
(d) Left Door Harness
(e) Body Harness

(4) Install the two right side A-pillar, instrument panel retaining bolts and one nut (Fig. 25).

(5) Place the right end cap in position and snap into place.

(6) Install two screws to the right instrument panel end cap.

(7) Install glove box assembly:

(a) Place glove box assembly in position and make the orientation of the hinge is correct and snap glove box assembly hinge into place (Fig. 10).

(b) Lift glove box assembly up, push in on the box/bin sides to allow the glove box to pass by the instrument panel.

(c) Close glove box.

NOTE: The center console wiring is routed underneath the rear floor heat duct. You can maneuver the wiring underneath the rear seat heat duct without removal.

(8) Install two retaining bolts at the right side of the center support bracket (Fig. 26).

REMOVAL AND INSTALLATION (Continued)

(9) Connect the following two center console wiring connectors:

(a) Occupant Restraint Controller (ORC) connector

(b) Park Brake Switch connector

(10) If equipped with an automatic, install the shifter handle and shifter bezel.

(a) **Shifter Bezel** - Connect the illumination lamp, place in position and snap into place.

(b) **Shifter Handle** - Place the shifter handle on the shifter assembly, tighten the set screw retaining the shifter handle.

(11) Place front of console into place and then rear over parking brake handle.

(12) Lift up the front of the console and connect one wire connector to console mounted auxiliary power outlet.

(13) Release parking brake handle.

(14) Connect wiring to rear power window switch and snap into rear of center console.

(15) Install four screws to center console.

(16) Install two retaining bolts at the left side of the center support bracket (Fig. 26).

(17) Install the two left side A-pillar, instrument panel retaining bolts and one nut (Fig. 25).

(18) Connect the five left side wiring connectors:

(a) Data Link Connector

(b) Two main instrument panel connectors.

(c) Brake Switch

(d) Left Side Body Harness

(e) Left Door Harness

(19) Place the left end cap in position and snap into place.

(20) Install two screws to the left instrument panel end cap.

(21) Install the two brake pedal support bracket, instrument panel retaining bolts (Fig. 23).

(22) Install steering column:

(a) Place column in instrument panel opening.

(b) Install the four retaining nuts to the steering column.

(c) Install the steering column pinch bolt at the base of the lower coupler.

(23) Connect the steering column wire connectors:

(a) Ignition Switch

(b) Multi-Function Switch

(c) Clockspring

(24) Place left lower instrument panel bezel in position and make sure the orientation of the hinge is correct and snap bezel hinge into place

(25) Roll bezel upward and snap into place.

(26) Place upper and lower steering column shrouds into place and snap together.

(27) Install the two retaining screws to the upper and lower steering column shrouds.

(28) Place HVAC control head into place in instrument panel.

(29) Connect the following onto the HVAC control head:

(a) Two control cables

(b) Vacuum harness connector

(c) One wiring connector

(30) Install the two screws retaining the HVAC control head.

(31) Install the instrument panel top cover.

(a) Place the top cover into place. Line up the fasteners with each slot and firmly snap into place.

(b) Install the two top cover retaining screws.

(c) Place the center bezel into position, lining up the fasteners with the slots and snap into place.

(d) Install the HVAC control knobs.

(e) Install the one center bezel retaining screw.

(f) Connect the harness connector to the front power window switch. Align the front power window switch into the instrument panel center bezel opening and snap into place.

(g) Install the left and right A-pillar trim.

(32) Connect the battery negative cable (Fig. 4).

(33) Close hood.

(34) Verify vehicle and system operation.

INSTRUMENT PANEL CENTER BEZEL

REMOVAL

(1) Open hood.

(2) Disconnect and isolate the battery negative cable (Fig. 4).

(3) Using a trim stick (special tool #C-4755) or equivalent, gently pry out the front power window switch from the instrument panel switch bezel (Fig. 29) and disconnect the switch electrical connector.

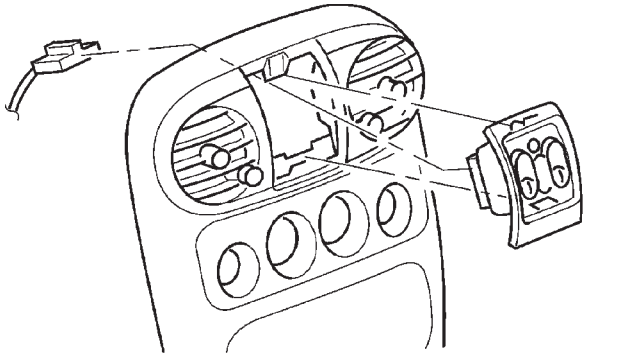

Fig. 29 Front Power Window Switch Remove/Install

(4) Remove HVAC control knobs from control head (Fig. 30).

REMOVAL AND INSTALLATION (Continued)

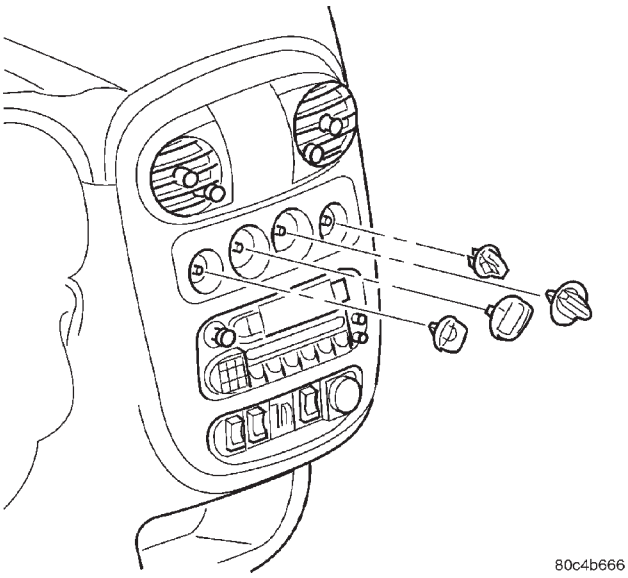

Fig. 30 HVAC Control Knobs Remove/Install

(5) Remove one retaining screw to center bezel inside window switch opening (Fig. 31).

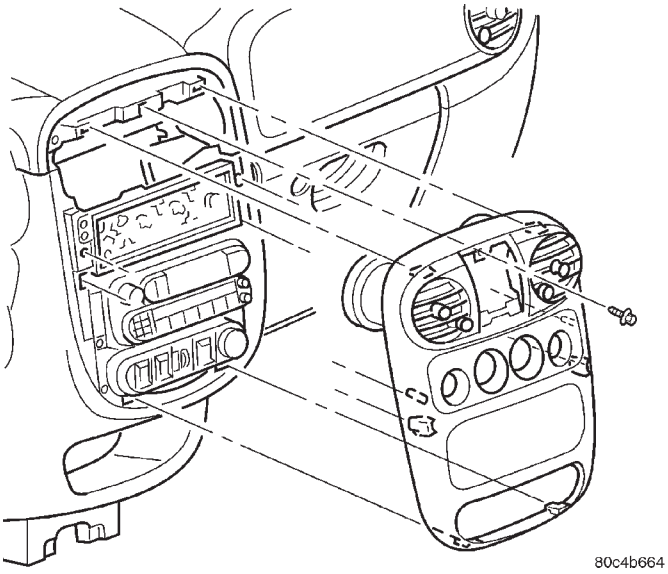

Fig. 31 Instrument Panel Center Bezel and Retaining Screw Remove/Install

(6) Using a trim stick or equivalent, gently pry the center bezel out of the instrument panel and remove (Fig. 31) from vehicle.

INSTALLATION

(1) Place center bezel over opening. Align the retaining clips and press firmly into place (Fig. 31).

(2) Install one center bezel retaining screw (Fig. 31).

(3) Reconnect the front power window switch connector and reinstall into center bezel opening (Fig. 29).

(4) Install the four HVAC control knobs (Fig. 30).

(5) Reconnect the battery negative cable (Fig. 4).

(6) Close hood.

(7) Verify operation of vehicle and systems.

INSTRUMENT PANEL END CAP

LEFT END CAP

REMOVAL

(1) Remove the left lower instrument panel bezel. Pull top rearward, lower to floor and with a quick pulling motion remove off instrument panel.

(2) Remove two screws to the left instrument panel end cap.

(3) Pull the left end cap rearward to unsnap (Fig. 32). Maneuver it out from underneath the left A-pillar trim and top cover. Removal of these components is not necessary.

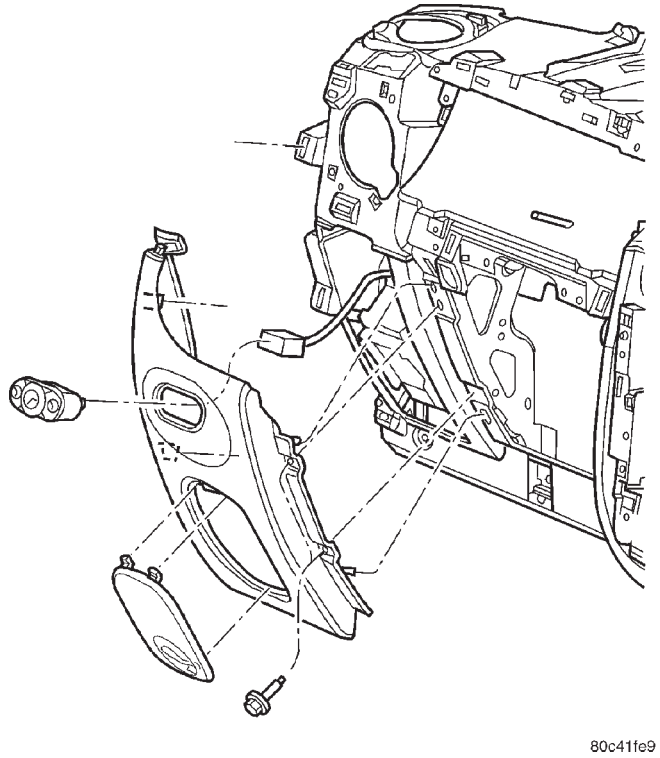

Fig. 32 Left Instrument Panel End Cap Remove/ Install

(4) Disconnect the power mirror switch wiring connector (if equipped) and remove from vehicle.

INSTALLATION

(1) Connect the power mirror switch wiring connector (if equipped).

(2) Place the left end cap in position and snap into place. Make sure that it is underneath the A-pillar trim and top cover.

(3) Install two screws to the left instrument panel end cap.

REMOVAL AND INSTALLATION (Continued)

(4) Place left lower instrument panel bezel in position and make sure the orientation of the hinge is correct and snap bezel hinge into place

(5) Roll bezel upward and snap into place.

RIGHT END CAP

REMOVAL

(1) Remove glove box assembly:

(2) Open glove box and push in on the sides of the glove box bin to allow the retainers to clear the instrument panel.

(3) Let the glove box drop down to the floor.

(4) Remove two screws to the right instrument panel end cap.

(5) Pull end cap rearward to unsnap and remove from vehicle. Maneuver it out from underneath the right A-pillar trim and top cover. Removal of these components is not necessary.

INSTALLATION

(1) Place the right end cap in position and snap into place. Make sure that it is underneath the A-pillar trim and top cover.

(2) Install two screws to the right instrument panel end cap.

(3) Lift glove box assembly up, push in on the box/bin sides to allow the glove box retainers to pass by the instrument panel.

(4) Close glove box door.

INSTRUMENT PANEL TOP COVER

REMOVAL

(1) Open hood.

(2) Disconnect and isolate the battery negative cable (Fig. 4).

(3) Using a trim stick (special tool #C-4755) or equivalent, gently pry off the left and right A-pillar trim.

(4) Using a trim stick or equivalent, gently pry out the front power window switch from the instrument panel center bezel. Disconnect the harness connector and remove (Fig. 29).

(5) Remove the one center bezel retaining screw (Fig. 31).

(6) Pull off the HVAC control knobs (Fig. 30).

(7) Using a trim stick or equivalent, gently pry off the center bezel and remove (Fig. 31).

(8) Remove the two top cover retaining screws (Fig. 33).

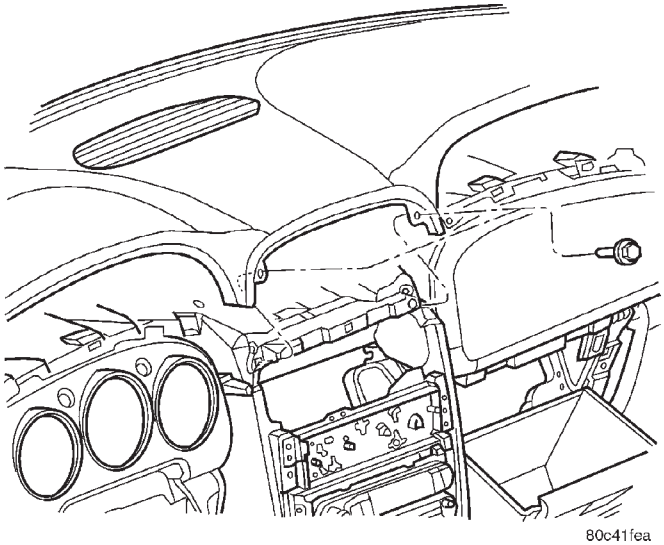

Fig. 33 Top Cover Retaining Screws Remove/Install

(9) Gently pull rearward on the top cover and unlatch it from the instrument panel and remove (Fig. 34).

INSTALLATION

(1) Place the top cover into place. Line up the fasteners with each slot and firmly, pushing forward, snap into place (Fig. 34).

(2) Install the two top cover retaining screws (Fig. 33).

(3) Place the center bezel into position, lining up the fasteners with the slots and snap into place (Fig. 31).

(4) Install the HVAC control knobs (Fig. 30).

(5) Install the one center bezel retaining screw (Fig. 31).

(6) Connect the harness connector to the front power window switch. Align the front power window switch into the instrument panel center bezel opening and snap into place (Fig. 29).

(7) Install the left and right A-pillar trim.

(8) Connect the battery negative cable (Fig. 4).

(9) Close hood.

(10) Verify vehicle and system operation.

REMOVAL AND INSTALLATION (Continued)

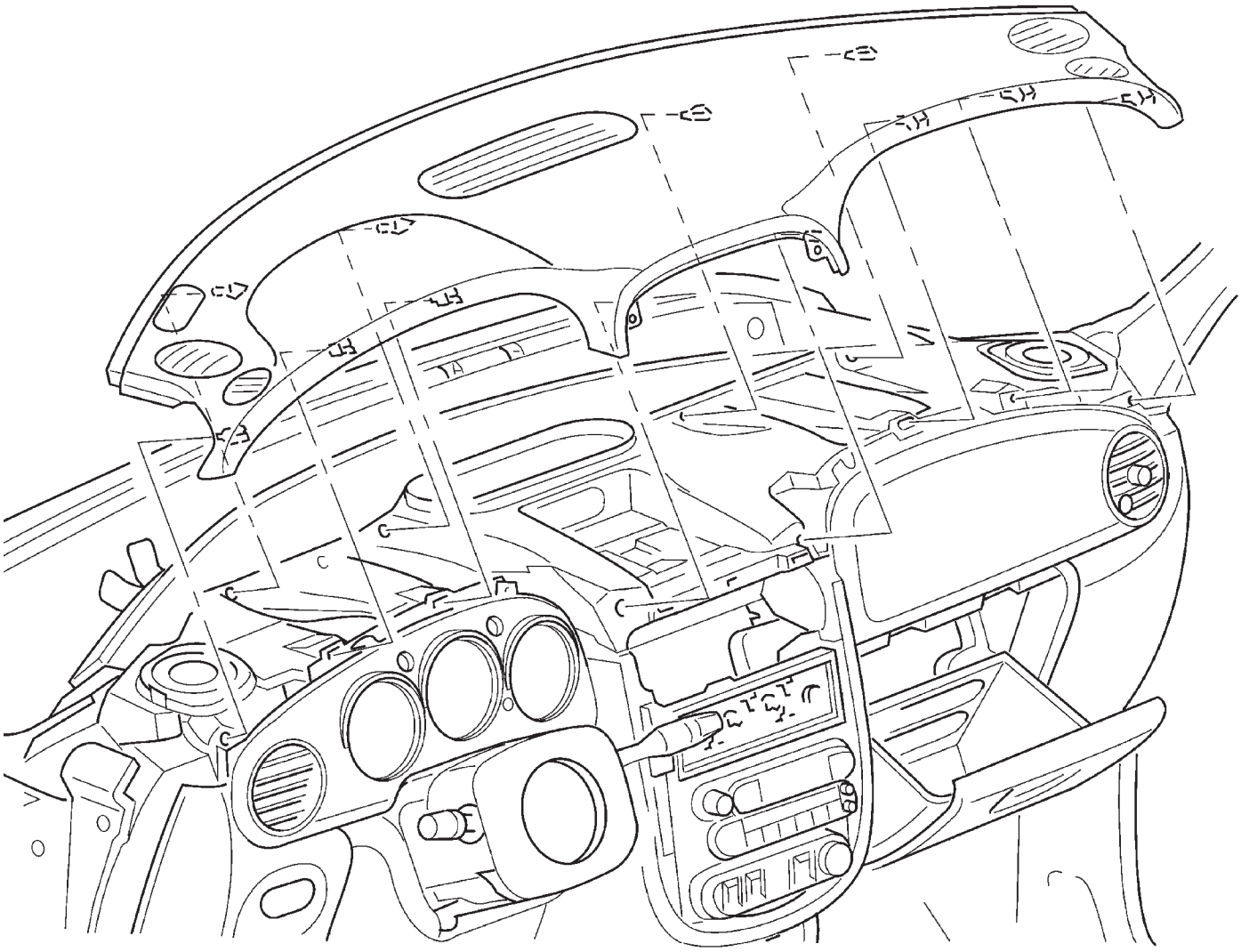

80c06e70

Fig. 34 Instrument Panel Top Cover Remove/Install

REMOVAL AND INSTALLATION (Continued)

LEFT LOWER INSTRUMENT PANEL BEZEL

REMOVAL

(1) Pull the top of the left lower instrument panel bezel rearward.

(2) Swing top of left lower instrument panel bezel to floor.

(3) With a quick pulling motion remove off instrument panel (Fig. 35).

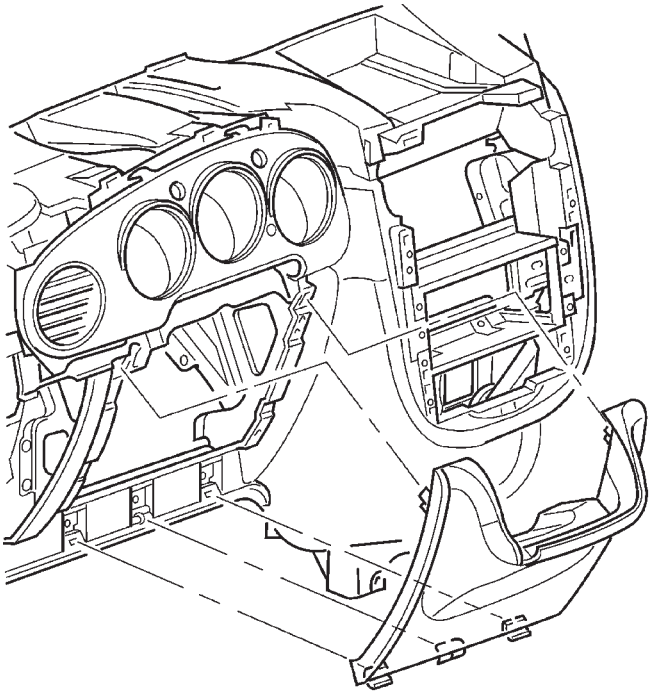

Fig. 35 Left Lower Instrument Panel Bezel Remove/ Install

INSTALLATION

(1) Place left lower instrument panel bezel in position and make sure the orientation of the hinge is correct and snap bezel hinge into place (Fig. 36).

(2) Roll bezel upward and snap into place (Fig. 35).

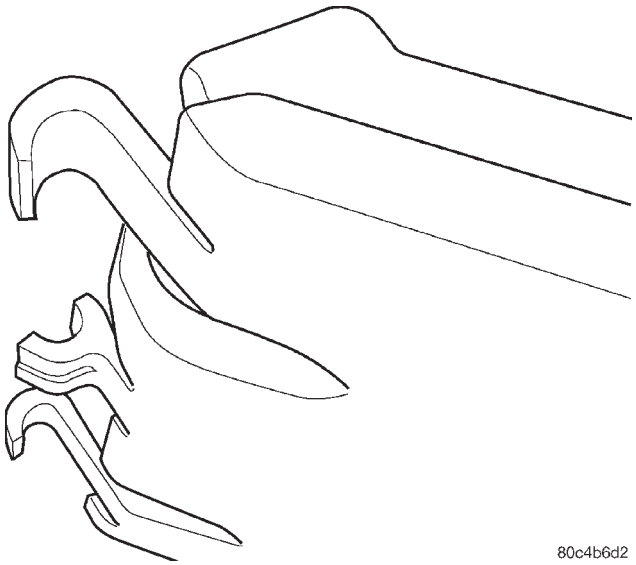

Fig. 36 Left Lower Instrument Panel Bezel Hinge

STEERING COLUMN SHROUDS

REMOVAL

(1) Remove left lower instrument panel bezel. Refer to Left Lower Instrument Panel Bezel Removal and Installation in this section.

(2) Remove two column shroud retaining screws.

(3) Separate upper and lower steering column shrouds (Fig. 37) and remove from vehicle.

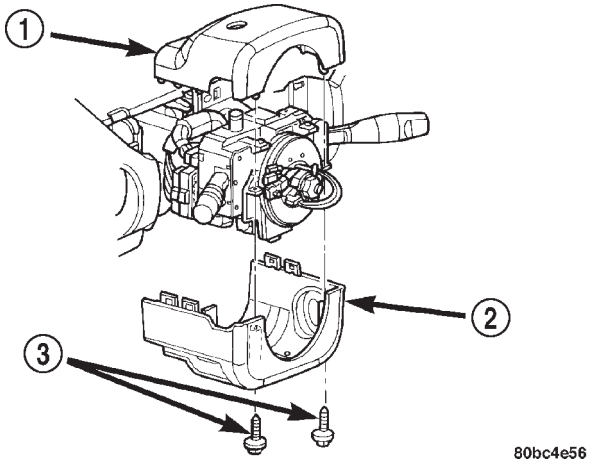

Fig. 37 Steering Column Shrouds

1 – UPPER SHROUD
2 – LOWER SHROUD
3 – MOUNTING SCREWS

REMOVAL AND INSTALLATION (Continued)

INSTALLATION

(1) Connect the upper and lower steering column shrouds (Fig. 37).

NOTE: Ensure that the locking tabs on the inboard and outboard sides of the shrouds are secure.

(2) Install the two column shroud retaining screws. Torque steering column shroud retaining screws to 2 N·m (18 in. lbs.).

(3) Install the left lower instrument panel bezel. Refer to Left Lower Instrument Panel Bezel Removal and Installation in this section.

TRACTION CONTROL SWITCH

The Traction Control Switch (Fig. 38) is located within the accessory switch bezel. If the switch is found defective, the bezel must be removed. Refer to Removal and Installation, Accessory Switch Bezel.

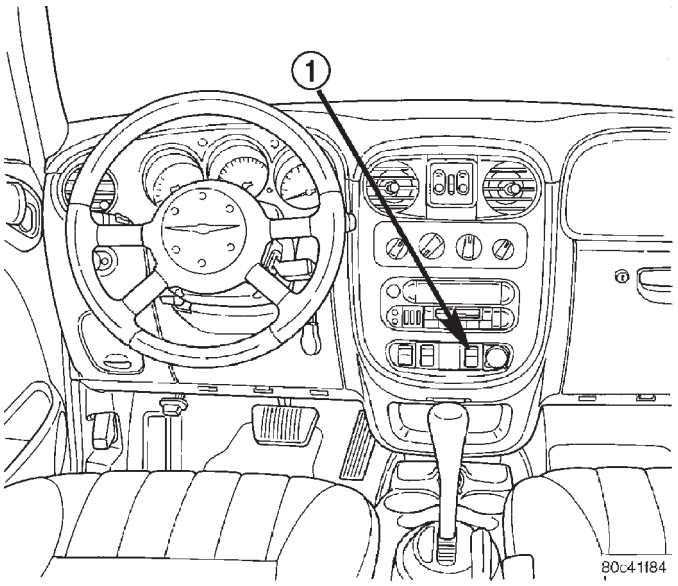

Fig. 38 Traction Control Switch Location

1 – TRACTION CONTROL SWITCH

INSTRUMENT PANEL AND SYSTEMS

TABLE OF CONTENTS

page

DESCRIPTION AND OPERATION
HEADLAMP LEVELING SYSTEM 1
HEADLAMP LEVELING SWITCH. 1
INSTRUMENT CLUSTER. 2
DIAGNOSIS AND TESTING
HEADLAMP LEVELING SWITCH. 2

page

REMOVAL AND INSTALLATION
INSTRUMENT PANEL - RHD 3
HEADLAMP LEVELING SWITCH. 3
INSTRUMENT CLUSTER. 4

DESCRIPTION AND OPERATION

HEADLAMP LEVELING SYSTEM

DESCRIPTION

Some vehicles are equipped with a remote headlamp leveling system. This system allows the driver to adjust the headlamp beam pattern from the interior of the vehicle to compensate for passenger or cargo load. Only the vertical axis of the headlamp beam can be adjusted.

A headlamp leveling switch is located on the instrument panel and controls the headlamp leveling motors/modules found on the headlamp modules. Leveling switch has four settings 0-3, 0 being the lowest, 3 being the highest headlight beam vertical setting.

When performing a headlamp beam pattern alignment on a vehicle equipped with headlamp leveling, be certain the headlamp leveling switch is in the “0” position before starting. Failure to do so will result in and incorrect headlamp alignment.

OPERATION

With the rotation of the headlamp leveling switch control knob, voltage is adjusted at the headlamp leveling switch (rheostat). This signals the headlamp leveling motors to adjust the vertical headlamp beam pattern accordingly. Headlamps must be “on” in order for the leveling system to function.

HEADLAMP LEVELING SWITCH

DESCRIPTION

Vehicles equipped with headlamp leveling use a headlamp leveling switch (Fig. 1). This switch is located in the accessory switch bezel, located on the I.P. and is the primary controller of the headlamp leveling system. The leveling switch has four settings 0-3, 0 being the lowest, 3 being the highest headlight beam vertical setting.

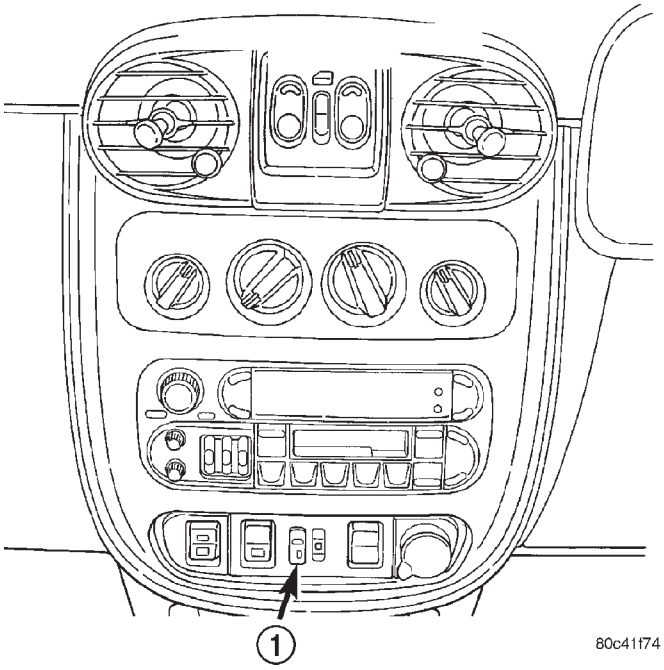

Fig. 1 Headlamp Leveling Switch
1 – HEADLAMP LEVELING SWITCH

OPERATION

With the rotation of the headlamp leveling switch control knob (Fig. 1), voltage is adjusted at the headlamp leveling switch (rheostat). This signals the headlamp leveling motors (headlamp module mounted) to adjust the vertical headlamp beam pattern accordingly. Headlamps must be “on” in order for the leveling system to function. Refer to Headlamp Leveling System Description and Operation for more information.

DESCRIPTION AND OPERATION (Continued)

INSTRUMENT CLUSTER

DESCRIPTION

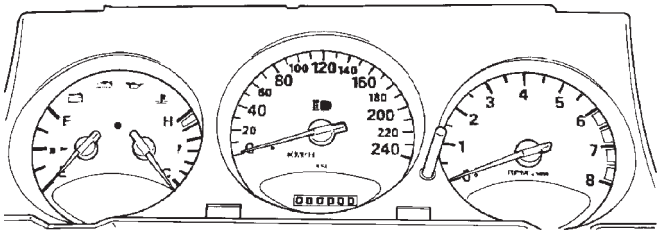

Fig. 2 BUX Instrument Cluster

The instrument cluster used on the PT body is referred to as a Electro-Mechanical Instrument Cluster (EMIC). Some of the features it controls are the instrument gauges (except fuel), courtesy lamps, chime control, daytime running lamps (DRL) and self diagnostics (cluster diagnostics). The turn signals are wired through the cluster. The cluster sends and receives messages via the PCI bus circuit. All instrument cluster indicators (Airbag, seat belt, etc.) are LED's and are not replaceable, with the exception of the high beam indicator which is a bulb. The gauges are not replaceable individually thereby requiring complete replacement of the cluster if one indicator or gauge becomes defective.

OPERATION

When the ignition key is on, the instrument cluster indicator lamps will come on for a brief bulb check. The seat belt indicator lamp will remain on until the (Driver) seat belt is fastened. The chime will sound for 6 seconds if the seat belt is unbuckled when the ignition is first turned on. The export instrument cluster operates in the same manner as non-export clusters. Refer to the appropriate Diagnostic Manual for complete diagnosis and testing of the instrument cluster.

INSTRUMENT CLUSTER SERVICE CAUTIONS

- DO NOT LEAVE INSTRUMENT CLUSTER EXPOSED TO OR CLOSE TO DIRECT SUNLIGHT. OVERHEATING WILL RESULT.
- DO NOT REMOVE/INSTALL INSTRUMENT CLUSTER WITH IOD (M1) FUSE INSTALLED AND OR IGNITION ON.
- DO NOT TURN INSTRUMENT CLUSTER UPSIDE DOWN FOR MORE THAN 20 MINUTES.
- DO NOT SWAP INSTRUMENT CLUSTERS BETWEEN TWO VEHICLES WHEN TRYING TO DIAGNOSE A POSSIBLE FAULTY CLUSTER.

DIAGNOSIS AND TESTING

HEADLAMP LEVELING SWITCH

The following test is designed to diagnose a possible faulty headlamp leveling switch. Refer to Headlamp Leveling System Description and Operation and/or Diagnosis and Testing for additional information.

(1) Disconnect and isolate the negative battery cable.

(2) Remove the center instrument panel bezel. Refer to Instrument Panel section for a detailed procedure.

(3) Remove the accessory switch bezel retaining screws and pull bezel away from I.P..

(4) Disconnect the headlamp leveling switch electrical connector.

(5) Using an Ohm meter and the table below, check the resistance between switch connector pins 1&2 (Fig. 3).

(6) If the test results are **not** as indicated in the table below, replace the switch. If test results **are** as indicated below, the switch is OK at this time and refer to Headlamp Leveling System Diagnosis and Testing in the Lamps section of the service manual.

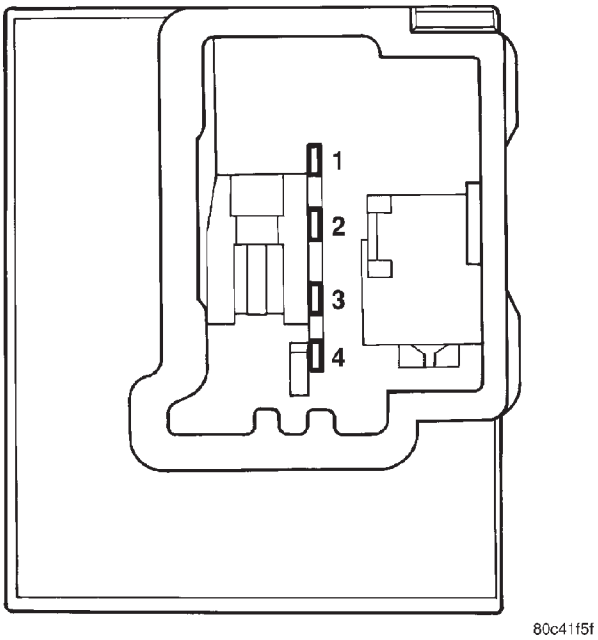

Fig. 3 Headlamp Leveling Switch

DIAGNOSIS AND TESTING (Continued)

HEADLAMP LEVELING SWITCH	
SWITCH POSITION	RESISTANCE BETWEEN PINS 1&2
0	0.752Ω
1	0.564Ω
2	348.8Ω
3	249.2Ω

REMOVAL AND INSTALLATION

INSTRUMENT PANEL - RHD

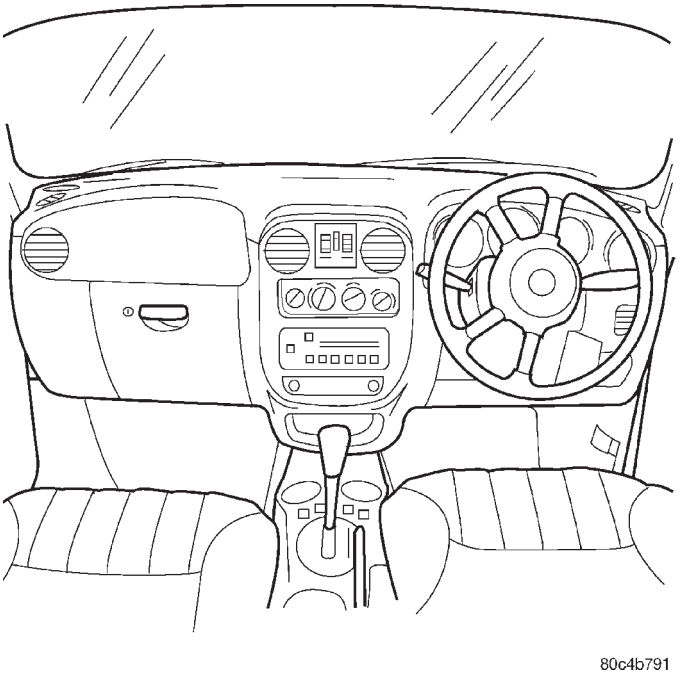

Fig. 4 RHD Instrument Panel

The RHD PT utilizes a identical / symmetrically opposite instrument panel (Fig. 4). Refer to the LHD instrument panel removal and installation procedure for detailed instructions.

HEADLAMP LEVELING SWITCH

REMOVAL

(1) Disconnect and isolate the negative battery cable.

(2) Remove the center instrument panel bezel. Refer to the Instrument Panel section of the service manual for a detailed procedure.

(3) Remove the accessory switch bezel retaining screws (Fig. 6) and pull bezel away from the I.P.

(4) Disconnect the headlamp leveling switch electrical connector (Fig. 5). Depress release tab and pull straight apart.

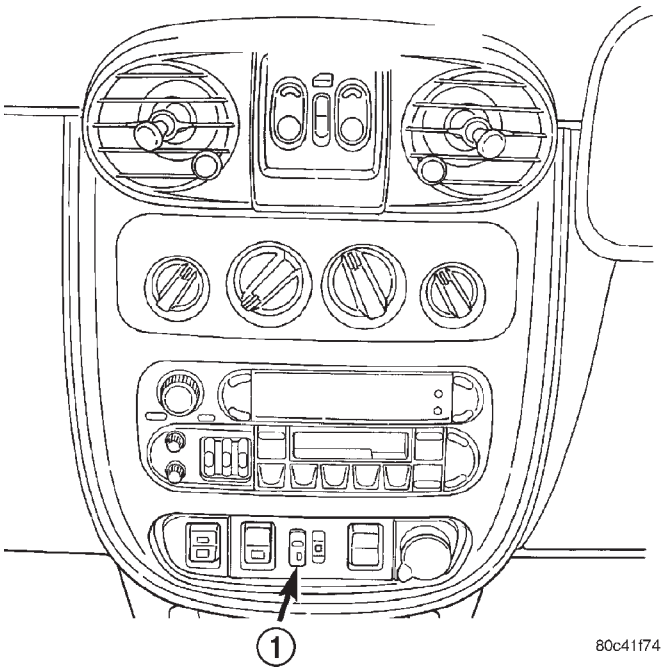

Fig. 5 Headlamp Leveling Switch Location

1 – HEADLAMP LEVELING SWITCH

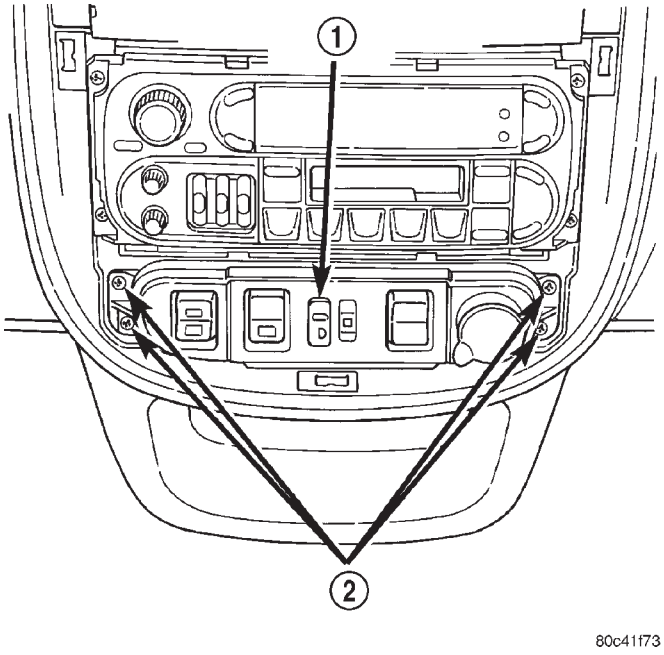

Fig. 6 Accessory Switch Bezel Retaining Screws

1 – HEADLAMP LEVELING SWITCH
2 – ACCESSORY SWITCH BANK RETAINING SCREWS

(5) Remove the headlamp leveling switch from the accessory switch bezel.

INSTALLATION

(1) Connect the headlamp leveling switch electrical connector.

REMOVAL AND INSTALLATION (Continued)

(2) Verify switch, headlamp leveling system operation.

(3) Install the headlamp leveling switch in the accessory switch bezel.

(4) Position and install the accessory switch bezel retaining screws (Fig. 6).

(5) Install the center instrument panel bezel. Refer to Instrument Panel for a detailed procedure.

(6) Connect the negative battery cable.

INSTRUMENT CLUSTER

The RHD PT utilizes a identical / symmetrically opposite instrument panel and components. Refer to the LHD instrument cluster removal and installation procedure for detailed instructions.

INSTRUMENT CLUSTER SERVICE CAUTIONS

• DO NOT LEAVE INSTRUMENT CLUSTER EXPOSED TO OR CLOSE TO DIRECT SUNLIGHT. OVERHEATING WILL RESULT.

• DO NOT REMOVE/INSTALL INSTRUMENT CLUSTER WITH IOD (M1) FUSE INSTALLED AND OR IGNITION ON.

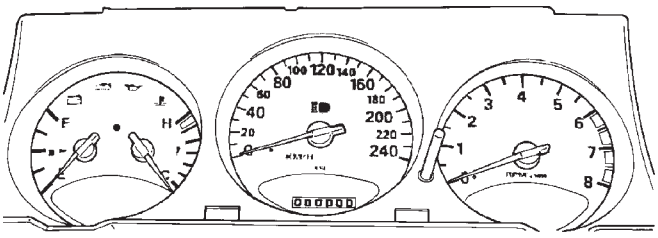

80c41f77

Fig. 7 BUX Instrument Cluster

• DO NOT TURN INSTRUMENT CLUSTER UPSIDE DOWN FOR MORE THAN 20 MINUTES.

• DO NOT SWAP INSTRUMENT CLUSTERS BETWEEN TWO VEHICLES WHEN TRYING TO DIAGNOSE A POSSIBLE FAULTY CLUSTER.

AUDIO SYSTEM

TABLE OF CONTENTS

page

DESCRIPTION AND OPERATION
AUDIO SYSTEM 1
INTERFERENCE ELIMINATION 1
DIAGNOSIS AND TESTING
AUDIO DIAGNOSTIC TEST PROCEDURES 1
IN-CAR ANTENNA TESTING 2
BENCH TEST FOR ANTENNA 8

page

REMOVAL AND INSTALLATION
D-PILLAR SPEAKER 8
FRONT DOOR SPEAKER. 9
INSTRUMENT PANEL SPEAKER. 10
MAST and ANTENNA ASSEMBLY. 12
RADIO 13

DESCRIPTION AND OPERATION

AUDIO SYSTEM

DESCRIPTION

Operating instructions for the factory installed audio systems can be found in the Owner's Manual provided with the vehicle.

The available radio options are:

- AM/FM/CD/Cassette
- AM/FM Cassette w/CD Changer Controls

NOTE: All factory-installed radios are readily identifiable by a three-digit alphabetical sales code, which is imprinted on the face plate lens, just below the Pentastar emblem.

OPERATION

The vehicles are equipped with an Interior (Ignition Off Draw) fuse in the Power Distribution Center located in the engine compartment. After the Interior (IOD) fuse or battery has been disconnected the clock will require resetting. The radio station presets have a nonvolatile memory and will retain the preset stations after a battery disconnect.

INTERFERENCE ELIMINATION

DESCRIPTION

The radio utilizes a ground wire terminal plugged on to the radio chassis. The terminal should be securely attached. The engine has separate ground straps to suppress ignition noise which may interfere with radio reception.

OPERATION

Inductive type spark plug cables in the high tension circuit of the ignition system complete the interference suppression. Faulty or deteriorated spark plug wires should be replaced.

DIAGNOSIS AND TESTING

AUDIO DIAGNOSTIC TEST PROCEDURES

NOTE: The CD player will only operate between approximate temperatures of -23°C and +65°C (-10°F and +145°F).

Whenever a radio malfunction occurs;
(1) First check FUSES:
(a) Power Distribution Center (PDC), Interior lamp fuse, M1 - Radio Memory Feed
(b) Fuse Block:
(I) Fuse 12, Illumination in the fuse block
(II) Fuse 16, Ignition feed in the fuse block

NOTE: The vehicles are shipped with the INTERIOR LAMP fuse disconnected.

(2) Verify, the radio wire harness are properly connected before starting normal diagnosis and repair procedures. Refer to Audio Diagnostic Charts and/or Wiring Diagrams, Radio.

DIAGNOSIS AND TESTING (Continued)

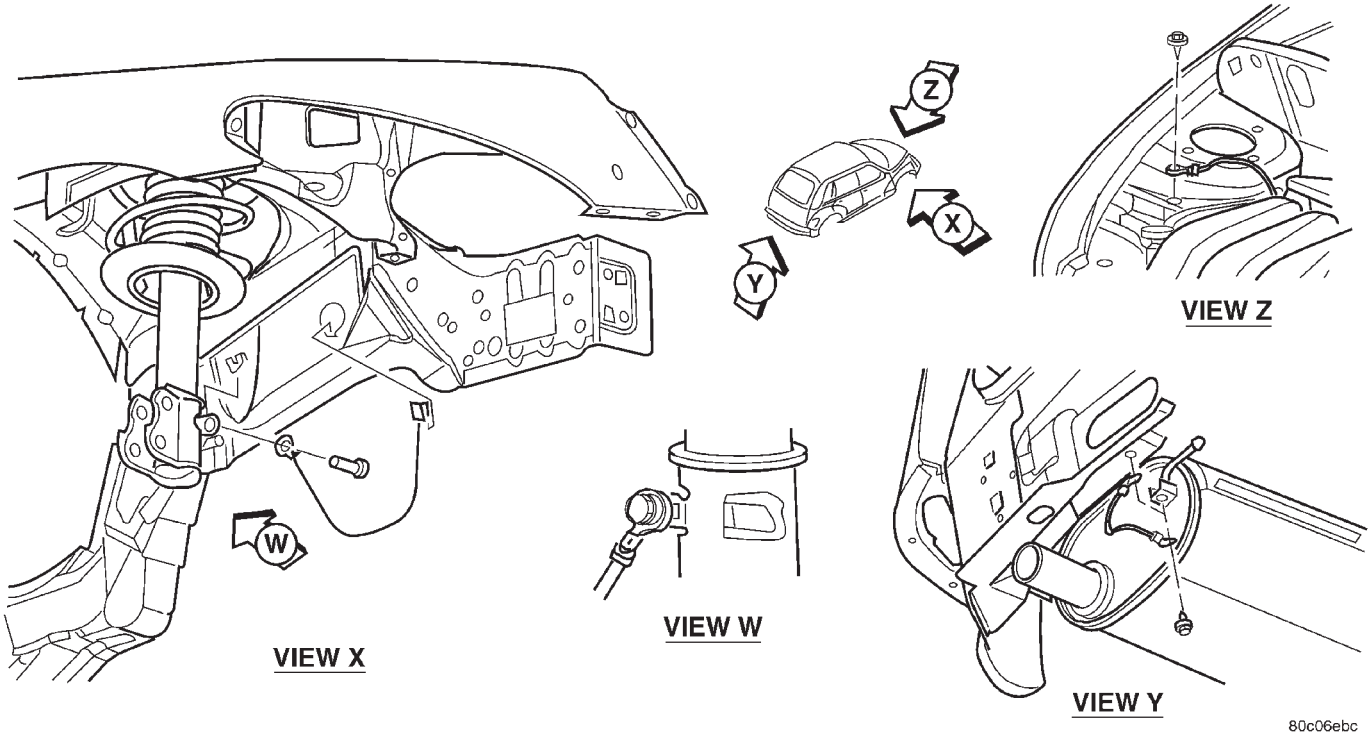

Fig. 1 Interference Elimination Ground Strap Location

IN-CAR ANTENNA TESTING

The antenna has a short cable which connects into the instrument panel harness. The connection is made on the right side of the instrument panel.

Antenna performance may be tested by substituting a known good antenna. It is also possible to check short or open circuits with an ohmmeter or continuity light once the antenna cable is disconnected from the radio as follows:

(1) Continuity should be present between the antenna mast and radio end pin of antenna cable plug (Fig. 2).

(2) No continuity should be observed or a very high resistance of several megohms between the ground shell of the connector and radio end pin.

(3) Continuity should be observed between the ground shell of the connector and the mounting hardware on the vehicle antenna. The wheel well splash shield must be removed for access to the antenna that is mounted on load beam.

DIAGNOSIS AND TESTING (Continued)

RADIO CONNECTORS

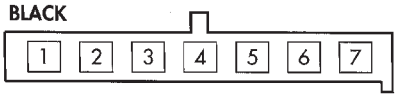

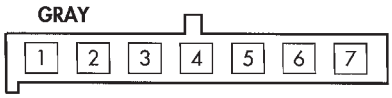

VIEW FROM WIRE END

LEGEND:

1 - AMP ON-OFF SIGNAL/ANT UP SIGNAL
2 - LEFT REAR SPEAKER FEED (+)
3 - RIGHT REAR SPEAKER FEED (+)
4 - LEFT FRONT SPEAKER FEED (+)
5 - RIGHT FRONT SPEAKER FEED (+)
6 - LEFT REAR SPEAKER RETURN (-)
7 - RIGHT REAR SPEAKER RETURN (-)

1 - RADIO MUTE
2 - LEFT FRONT SPEAKER RETURN (-)
3 - RIGHT FRONT SPEAKER RETURN (-)
4 - MARKER — (HEAD/PARK LAMPS)
5 - DIMMER — (PANEL, LAMPS, VARIABLE)
6 - ACCESSORY — (SWITCHED B+)
7 - BATTERY — (MEMORY)

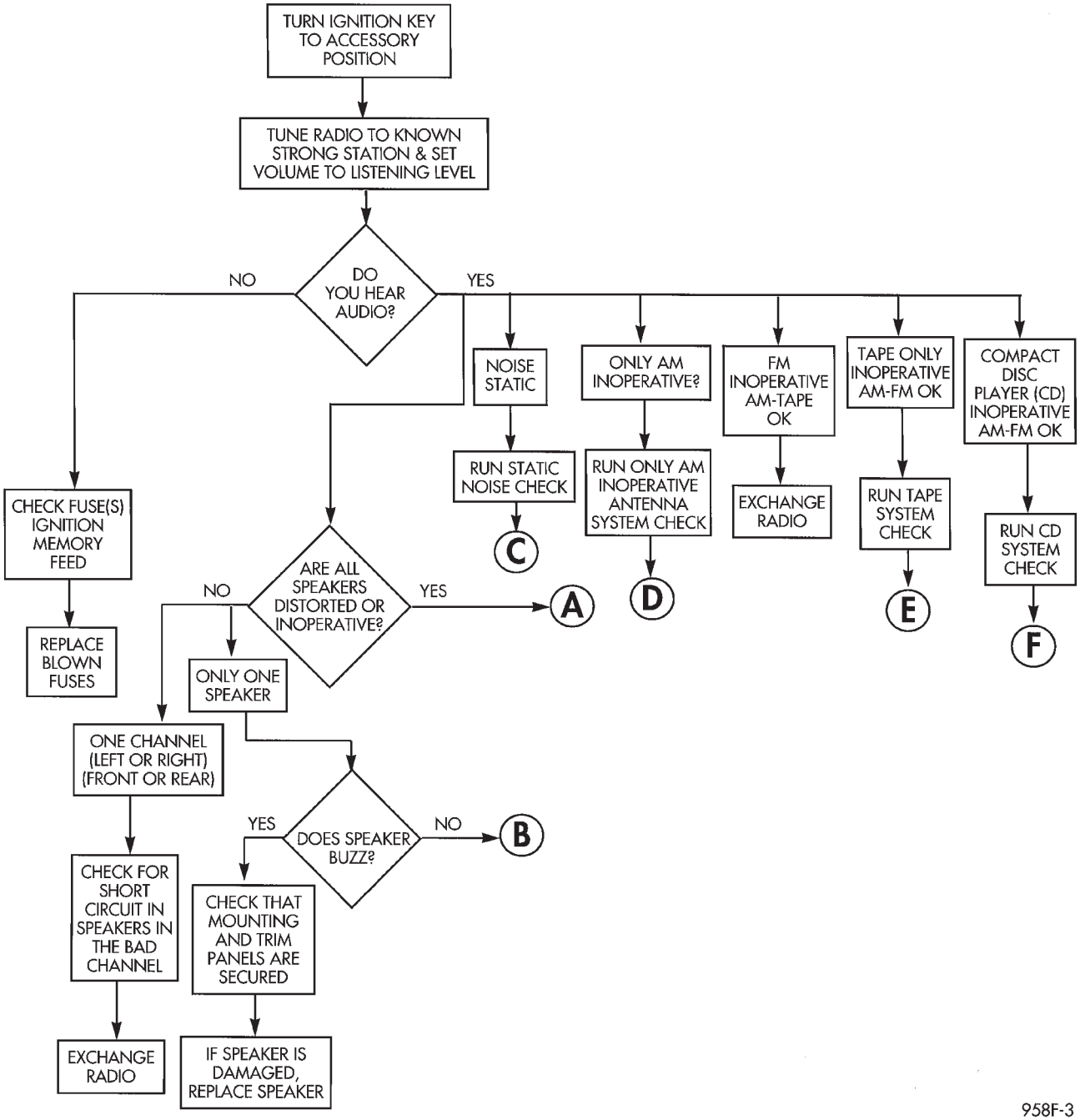

958F-3

DIAGNOSIS AND TESTING (Continued)

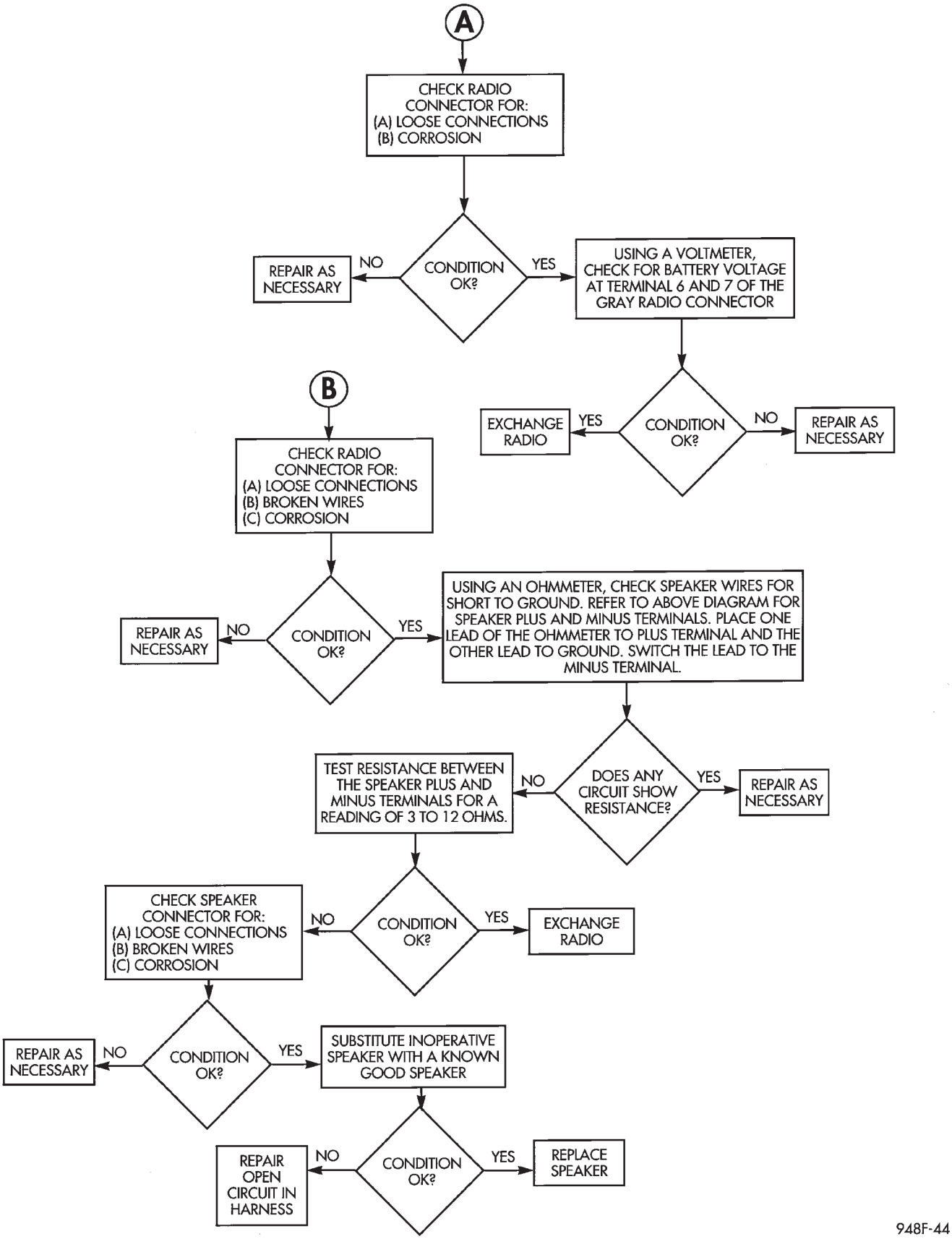

AM/FM STEREO CONTINUED

DIAGNOSIS AND TESTING (Continued)

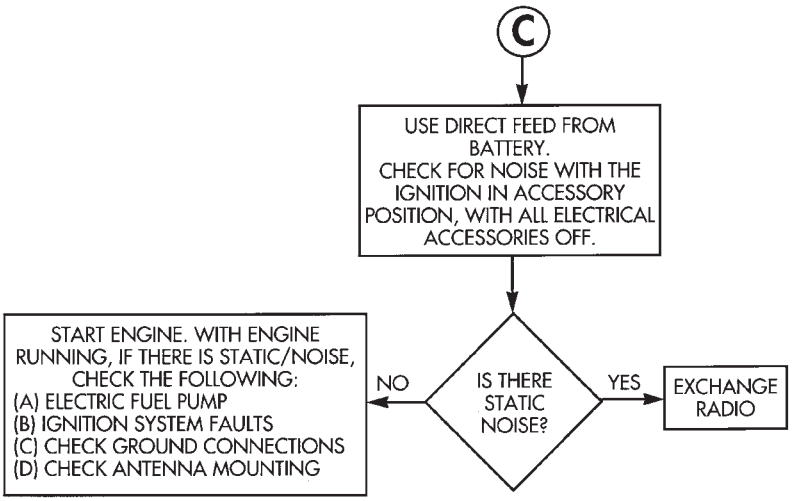

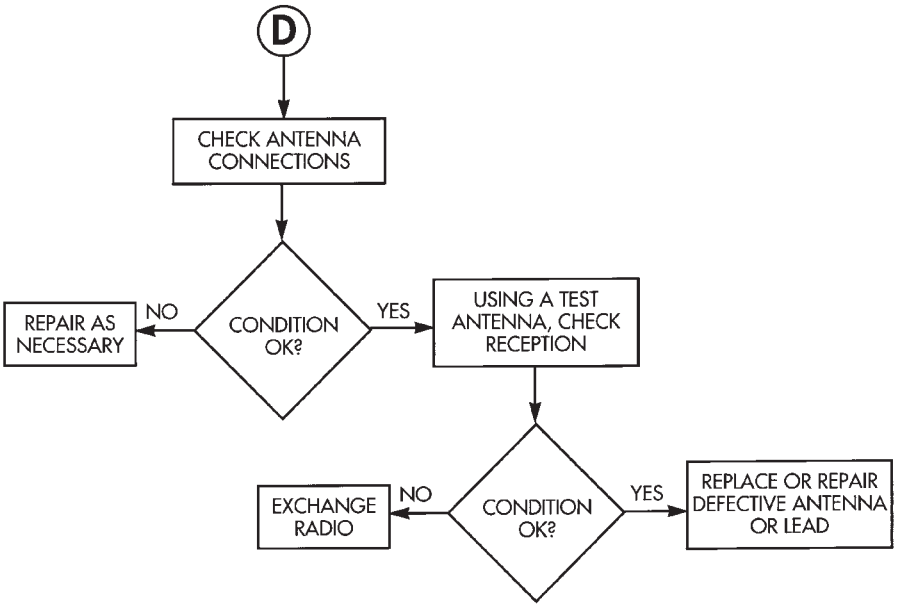

948F-16

DIAGNOSIS AND TESTING (Continued)

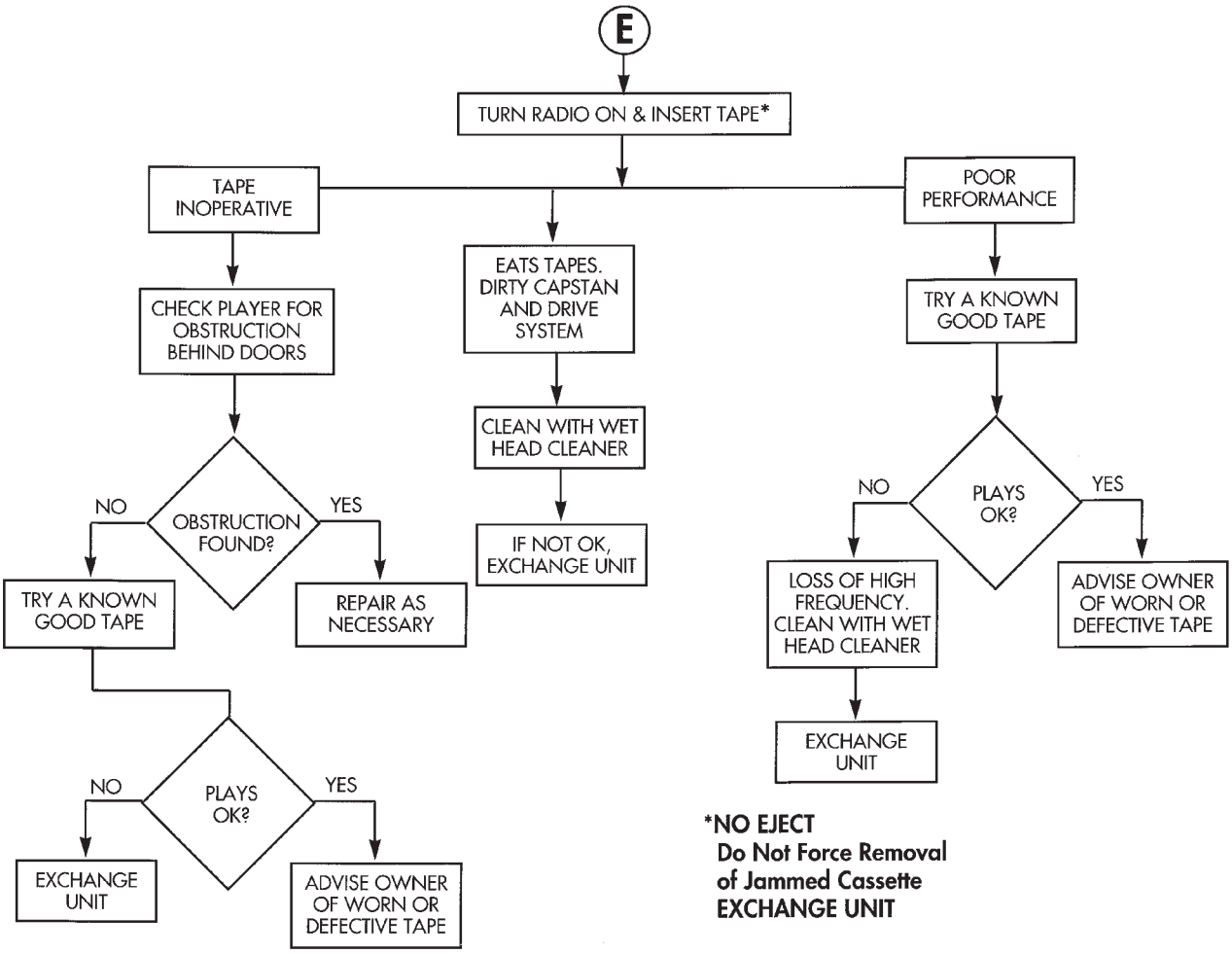

948F-17

DIAGNOSIS AND TESTING (Continued)

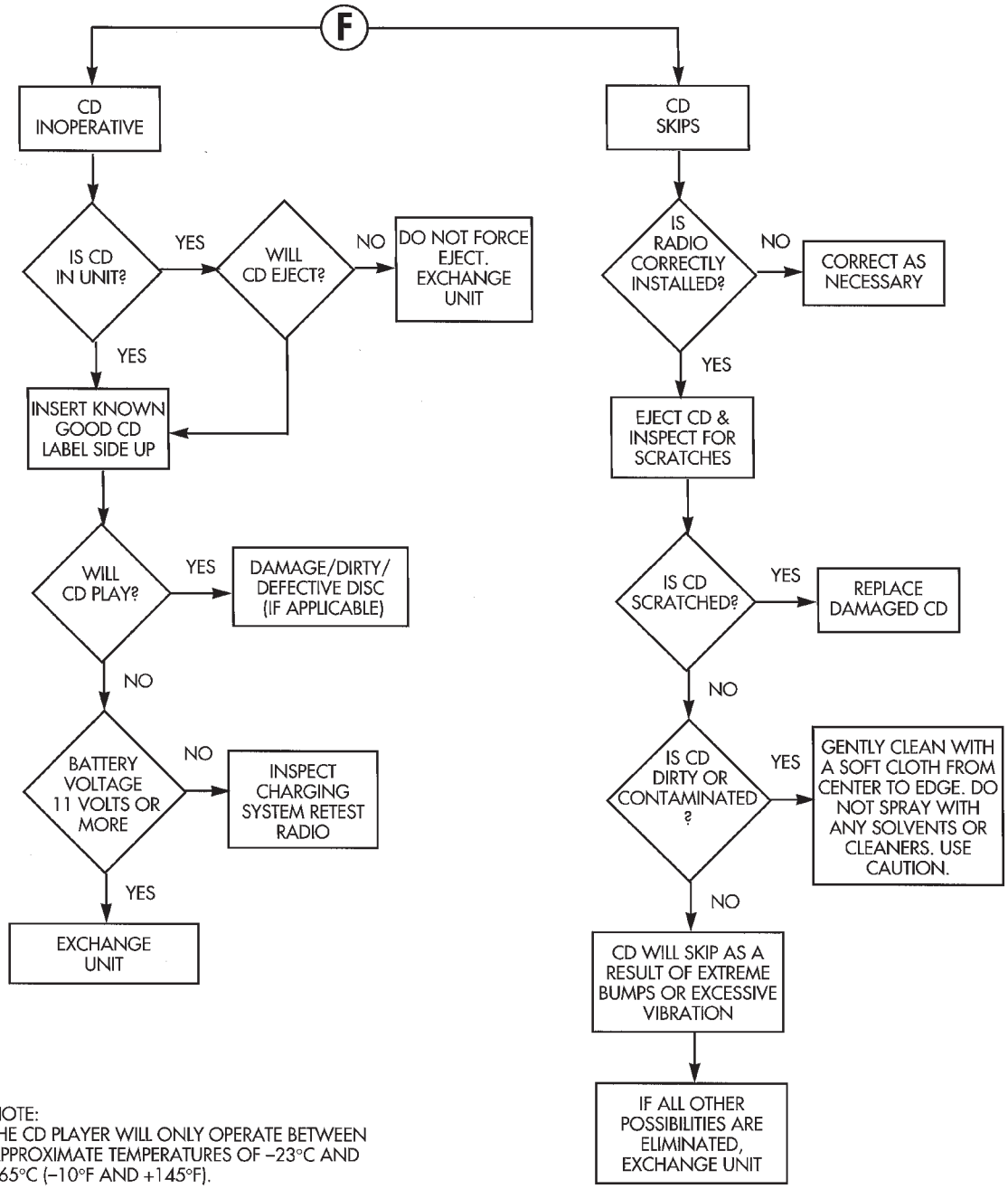

NOTE:
THE CD PLAYER WILL ONLY OPERATE BETWEEN APPROXIMATE TEMPERATURES OF −23°C AND +65°C (−10°F AND +145°F).

958F-4

AM/FM STEREO CONTINUED

DIAGNOSIS AND TESTING (Continued)

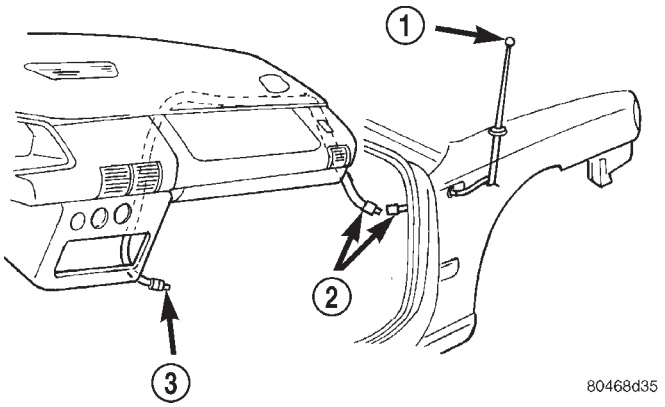

Fig. 2 Antenna Test Points - Typical

1 – TIP OF MAST TEST POINT
2 – DISCONNECT TEST POINTS
3 – RADIO END PIN TEST POINT

BENCH TEST FOR ANTENNA

It is also possible to check short or open circuits with an ohmmeter or continuity light once the antenna has been removed from the vehicle.

(1) Continuity should be present between the tip of the mast and radio lead in (Fig. 3).

(2) No continuity should be observed or a very high resistance of several megohms between the ground shell of the connector and radio end pin.

(3) Continuity should be observed between the ground shell of the connector and the mounting bracket. **Wiggle cable over its entire length to reveal intermittent short or open circuits during step 1, 2 and 3.**

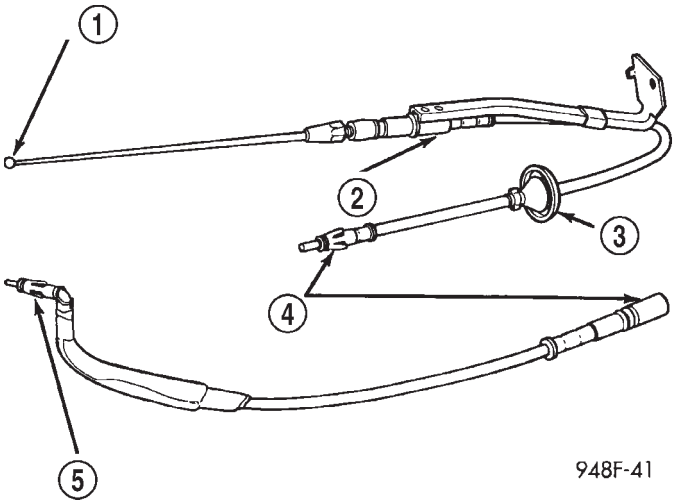

Fig. 3 Antenna Bench Test Points - Typical

1 – TIP OF MAST
2 – ANTENNA BODY
3 – PLUG
4 – CONNECTORS
5 – RADIO LEAD IN

REMOVAL AND INSTALLATION

D-PILLAR SPEAKER

REMOVAL

(1) Disconnect and isolate the battery negative cable (Fig. 4).

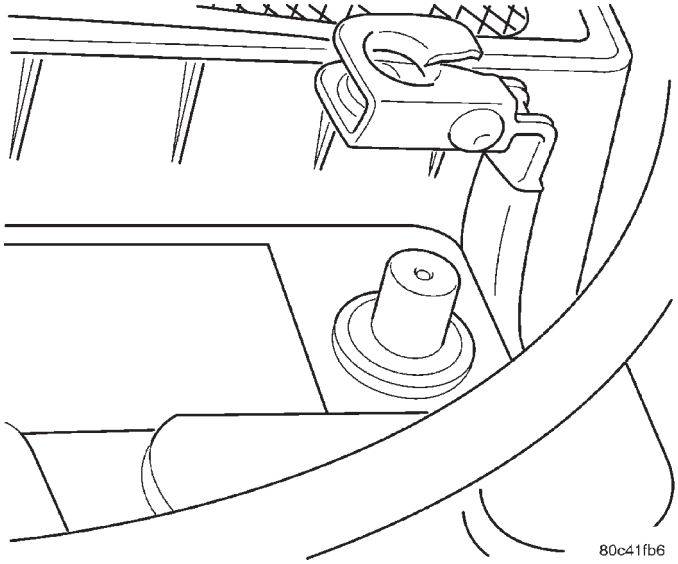

Fig. 4 Battery Negative Cable Remove/Install

(2) Using a trim stick (special tool #C-4755) or equivalent, gently pry up on the edge of the d-pillar trim panel and unsnap it from the d-pillar.

(3) Remove the D-pillar trim from the vehicle.

(4) Remove the four d-pillar speaker retaining screws (Fig. 5).

(5) Remove speaker and disconnect wire connector.

REMOVAL AND INSTALLATION (Continued)

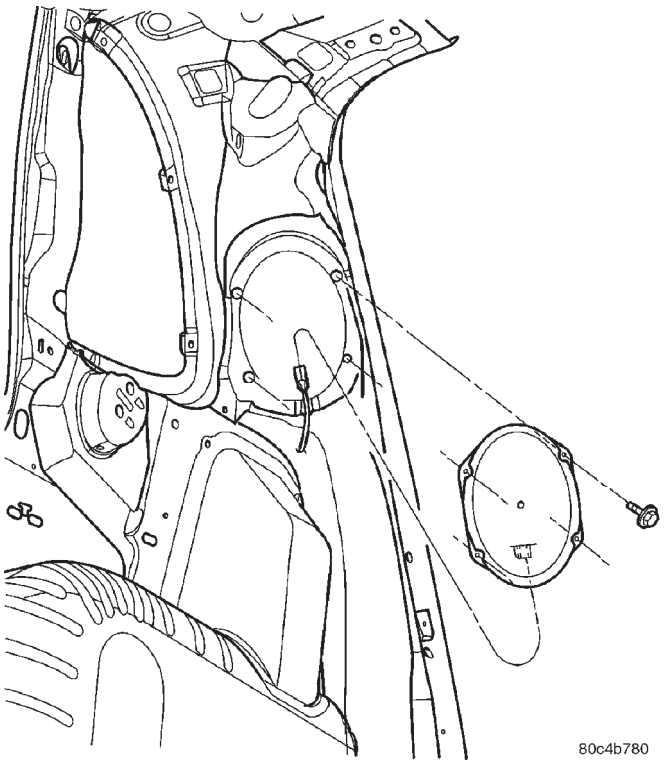

Fig. 5 D-Pillar Speaker Remove/Install

INSTALLATION

(1) Place speaker into opening, connect wire connector and install four speaker retaining screws (Fig. 5).

(2) Install the D-pillar trim. Align the trim panel with the fastener slots and snap into place.

(3) Connect the battery negative cable (Fig. 4).

(4) Verify vehicle and systems operation.

FRONT DOOR SPEAKER

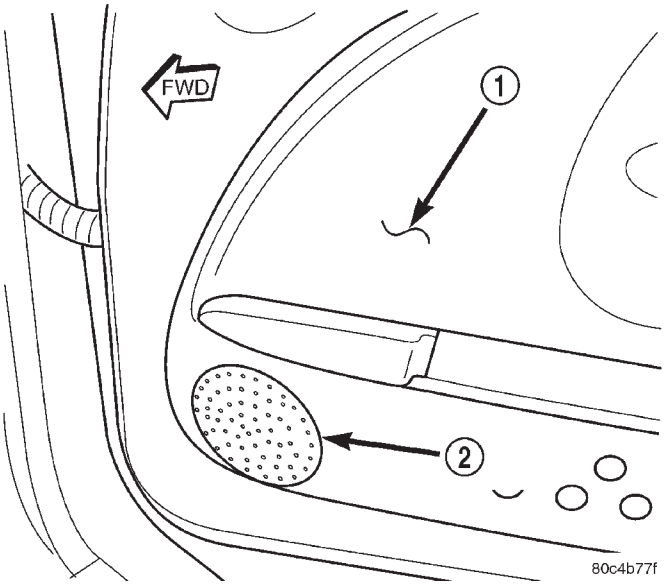

Fig. 6 Front Door Speaker Location

1 – DOOR TRIM PANEL
2 – DOOR SPEAKER

REMOVAL

(1) Disconnect and isolate the battery negative cable (Fig. 4).

(2) Remove front door trim. Refer to Body, Removal and Installation, Front Door Trim.

(3) Remove three speaker retaining screws (Fig. 7).

(4) Remove speaker assembly and disconnect wire connector from rear of speaker.

(5) Remove speaker from vehicle.

INSTALLATION

(1) Connect speaker wire connector.

(2) Place speaker into opening and install three speaker retaining screws (Fig. 7).

(3) Install front door trim. Refer to Body, Removal and Installation, Front Door Trim.

(4) Connect the battery negative cable (Fig. 4)

(5) Verify operation of vehicle and systems.

REMOVAL AND INSTALLATION (Continued)

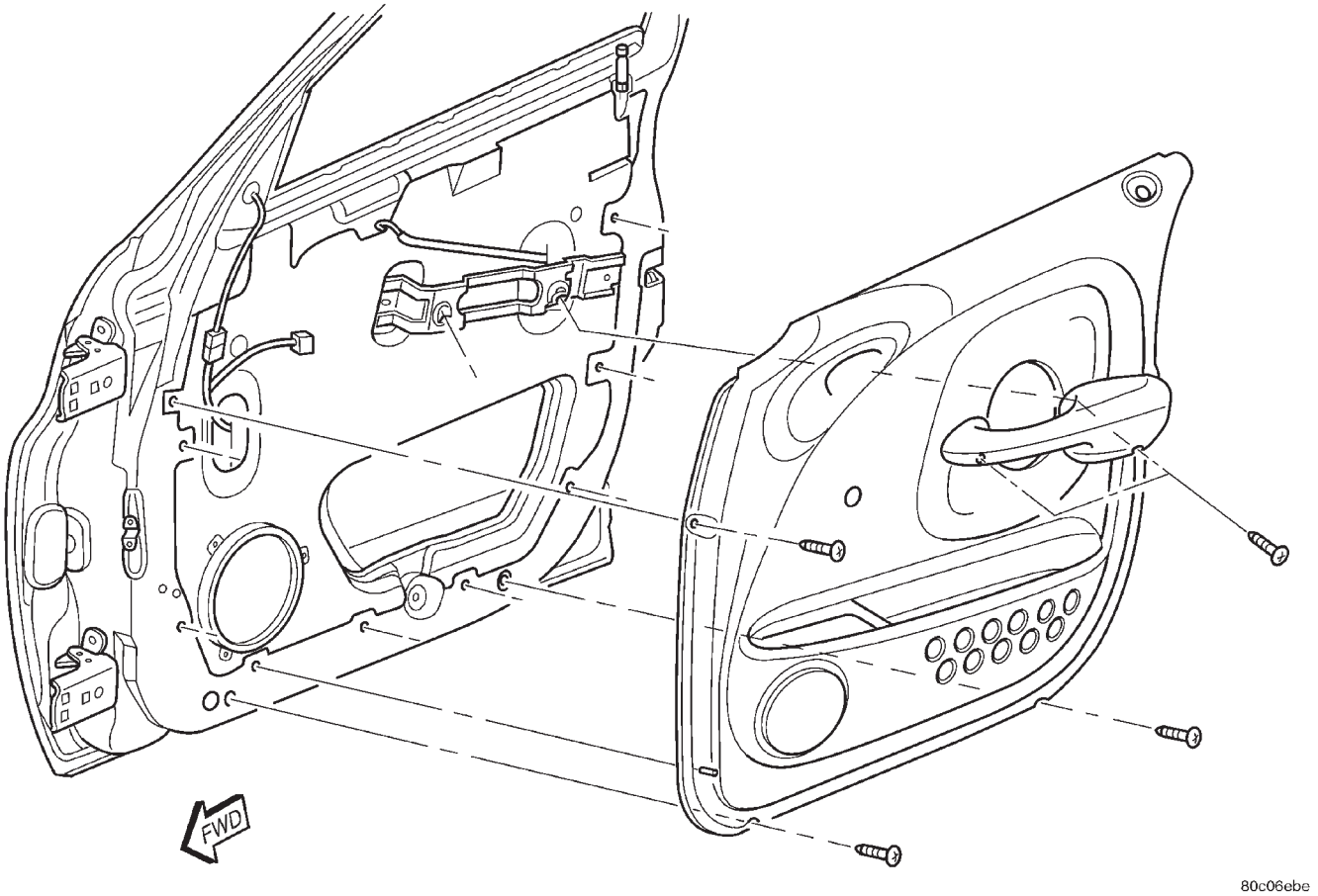

Fig. 7 Front Door Speaker Remove/Install

INSTRUMENT PANEL SPEAKER

REMOVAL

(1) Disconnect and isolate the battery negative cable (Fig. 4).

(2) Remove instrument panel top cover. Refer to Instrument Panel Systems, Instrument Panel Top Cover Removal and Installation.

(3) Remove two speaker retaining screws (Fig. 9).

(4) Remove speaker and disconnect wire connector.

INSTALLATION

(1) Connect speaker wire connector.

(2) Place speaker into opening and install two speaker retaining screws (Fig. 9).

(3) Install instrument panel top cover. Refer to Instrument Panel Systems, Instrument Panel Top Cover Removal and Installation.

(4) Connect the battery negative cable (Fig. 4).

(5) Verify operation of vehicle and systems.

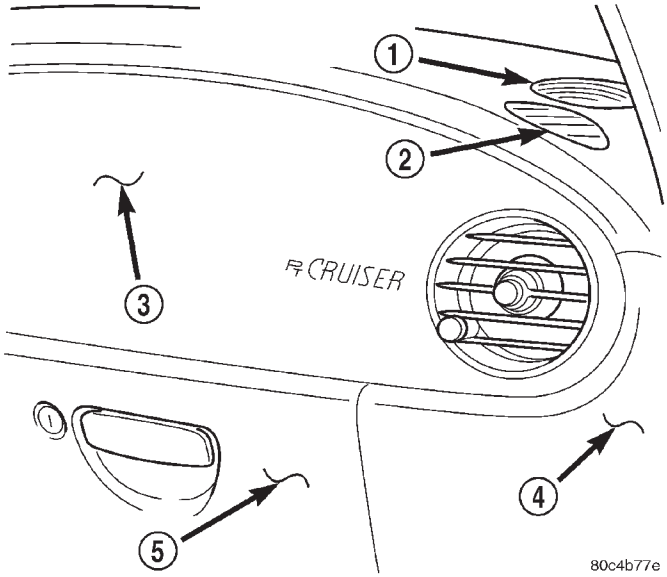

Fig. 8 Instrument Panel Speaker Location

1 – INSTRUMENT PANEL SPEAKER
2 – SIDE WINDOW DEMISTER
3 – PASSENGER AIRBAG MODULE
4 – RIGHT INSTRUMENT PANEL END COVER
5 – GLOVE BOX ASSEMBLY

REMOVAL AND INSTALLATION (Continued)

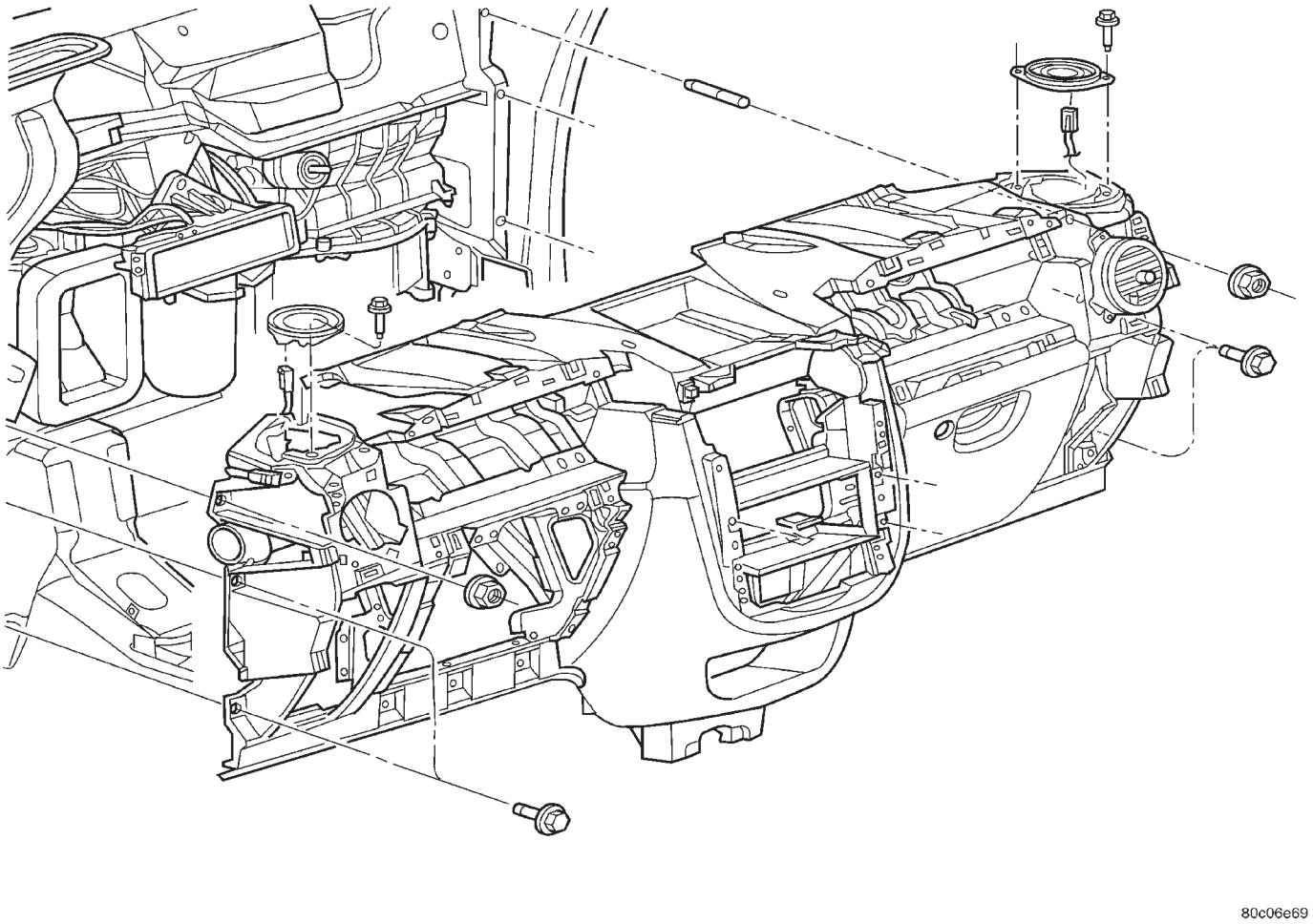

Fig. 9 Instrument Panel Speakers Remove/install

REMOVAL AND INSTALLATION (Continued)

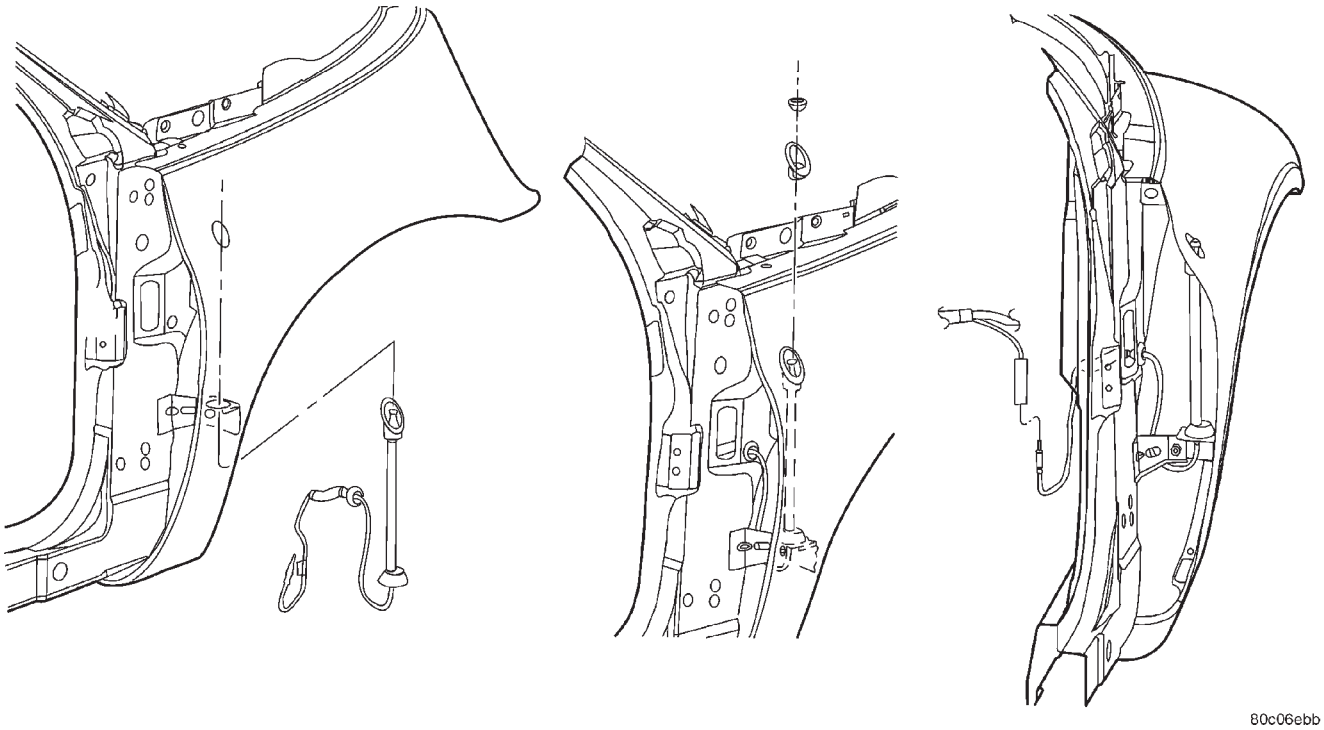

Fig. 10 Mast and Antenna Assembly Remove/Install

MAST and ANTENNA ASSEMBLY

REMOVAL

(1) Disconnect and isolate the battery negative cable (Fig. 4).

(2) Remove antenna mast by unscrewing mast from antenna body.

(3) Locate the antenna lead disconnect in the instrument panel wire harness above the right cowl trim panel. Disconnect the antenna cable from the instrument panel cable lead.

(4) Unfasten push pins from the rear of the plastic inner fender shield and move shield to gain access to mounting screws (Fig. 10).

(5) Remove mounting screws and remove antenna base and cable assembly from under the fender.

INSTALLATION

(1) Align antenna adapter tongue with grove in the fender hole and push adapter into fender.

(2) From under the fender, push the antenna base and cable assembly through the adapter in the fender. Tighten mounting screws to 7 N·m (75 in. lbs.).

(3) Seat the grommet in the side panel and connect the cable to the instrument panel harness connector.

(4) Install the plastic inner fender shield.

(5) Connect the antenna cable to the instrument panel cable lead.

(6) Install right cowl side trim panel.

(7) Connect the battery negative cable (Fig. 4).

(8) Verify operation of vehicle and systems.

REMOVAL AND INSTALLATION (Continued)

RADIO

NOTE: All factory-installed radios are readily identifiable by a three-digit alphabetical sales code, which is imprinted on the face plate lens, just below the Pentastar emblem.

REMOVAL

(1) Disconnect and isolate the battery negative cable (Fig. 4).

(2) Remove instrument panel center bezel. Refer to Instrument Panel Systems, Instrument Panel Center Bezel Removal and Installation.

(3) Remove four mounting screws on the radio and pull out of instrument panel (Fig. 11).

(4) Disconnect wiring and antenna cable and remove ground wire from radio.

(5) Remove radio from vehicle.

INSTALLATION

(1) Connect wiring antenna cable, and ground wire to radio.

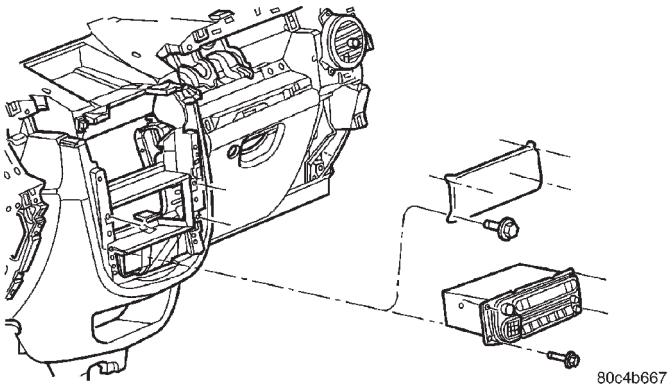

Fig. 11 Radio Remove/Install

(2) Push radio firmly into instrument panel opening and install the four radio mounting screws (Fig. 11).

(3) Install instrument panel center bezel. Refer to Instrument Panel Systems, Instrument Panel Center Bezel Removal and Installation.

(4) Connect the battery negative cable (Fig. 4).

(5) Verify operation of vehicle and systems.

AUDIO SYSTEMS

TABLE OF CONTENTS

page

DESCRIPTION AND OPERATION
MECHANICAL TELESCOPING ANTENNA 1
REMOVAL AND INSTALLATION
MECHANICAL TELESCOPING ANTENNA 2
ANTENNA MAST 4
SPECIAL TOOLS
AUDIO SYSTEMS 4

DESCRIPTION AND OPERATION

MECHANICAL TELESCOPING ANTENNA

DESCRIPTION

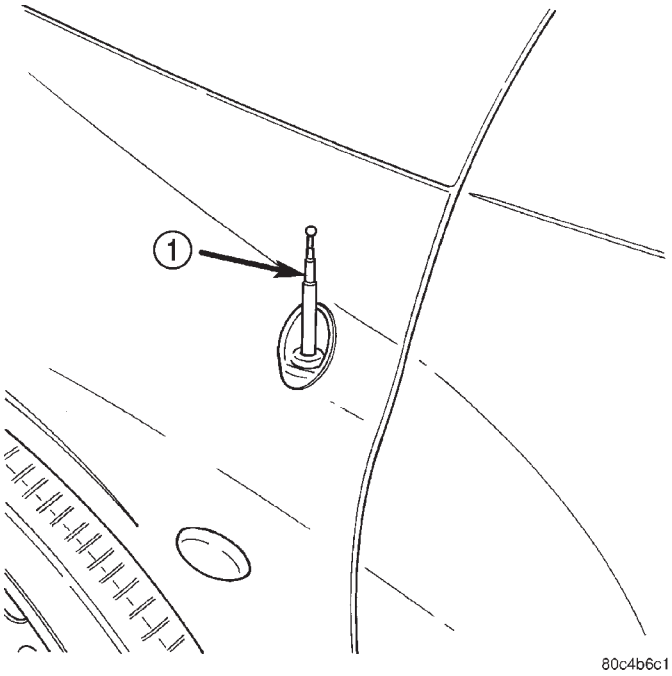

Fig. 1 Telescoping Antenna - Retracted
1 – MECHANICAL TELESCOPING ANTENNA

Some vehicles are equipped with a manually operated telescoping antenna. This antenna utilizes no motor and is intended to be raised or lowered by the operator. On Right Hand Drive (RHD) vehicles the antenna is located on the left side fender. On Left Hand Drive (LHD) vehicles the antenna is located on the right side fender. The antenna can be serviced as a complete assembly or in the event that just the mast becomes damaged, the antenna mast can be replaced separately.

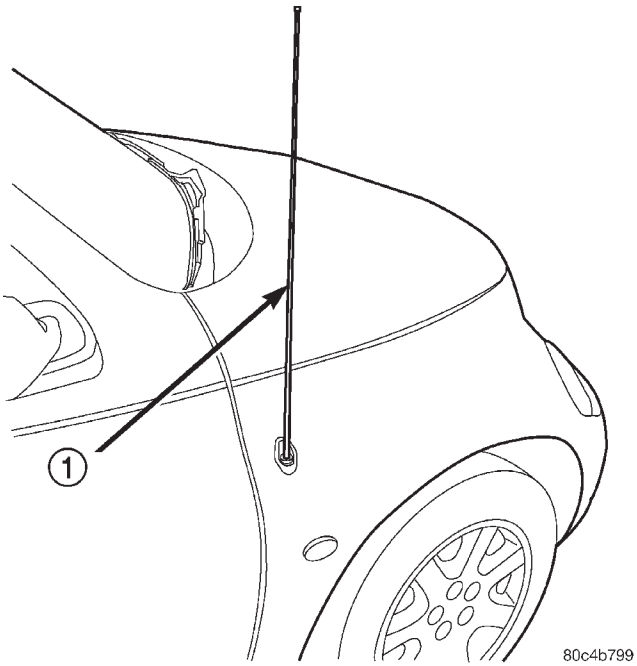

Fig. 2 Telescoping Antenna - Extended
1 – MECHANICAL TELESCOPING ANTENNA

OPERATION

When audio reception is desired the telescoping antenna can be pulled straight up to its full height by hand. Do not leave antenna extended when vehicle is parked or when visiting a automatic car wash. Serious antenna damage will result.

REMOVAL AND INSTALLATION

MECHANICAL TELESCOPING ANTENNA

REMOVAL

(1) Turn ignition key to the “off” position.

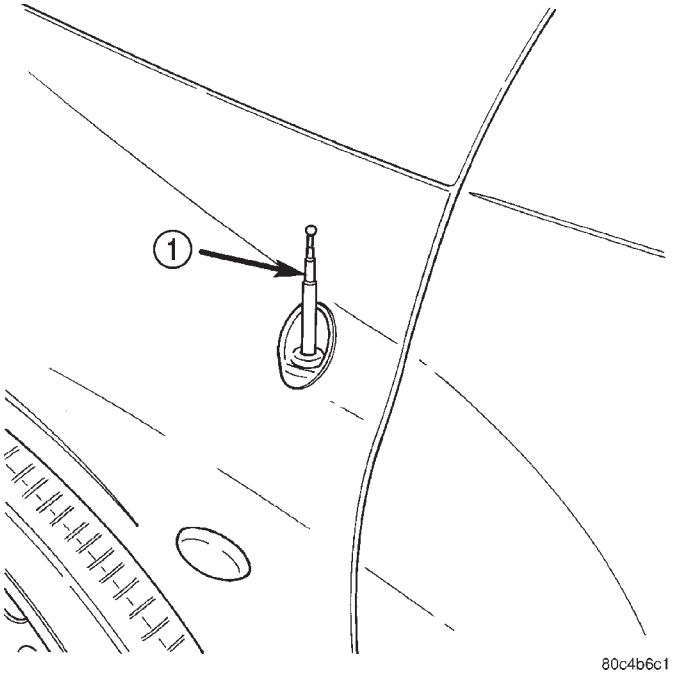

Fig. 3 Telescoping Antenna

1 – MECHANICAL TELESCOPING ANTENNA

(2) Mask area around antenna (Fig. 3) with masking tape to vehicle prevent paint damage.

(3) Remove the appropriate cowl trim panel to expose the antenna lead (Fig. 4). Disconnect antenna lead connection.

(4) Partially raise the vehicle on a hoist. Refer to the Lubrication and Maintenance section of this manual for instructions.

(5) Working on the appropriate side of the vehicle, remove the rearmost screws from the inner wheel well trim.

(6) Remove air blocker from wheel well. This will allow access to the telescoping antenna.

(7) Working in wheel well, remove antenna lead and grommet from the passenger compartment by pulling through the hole in the A-pillar.

(8) Remove antenna retaining nut shroud (Fig. 5).

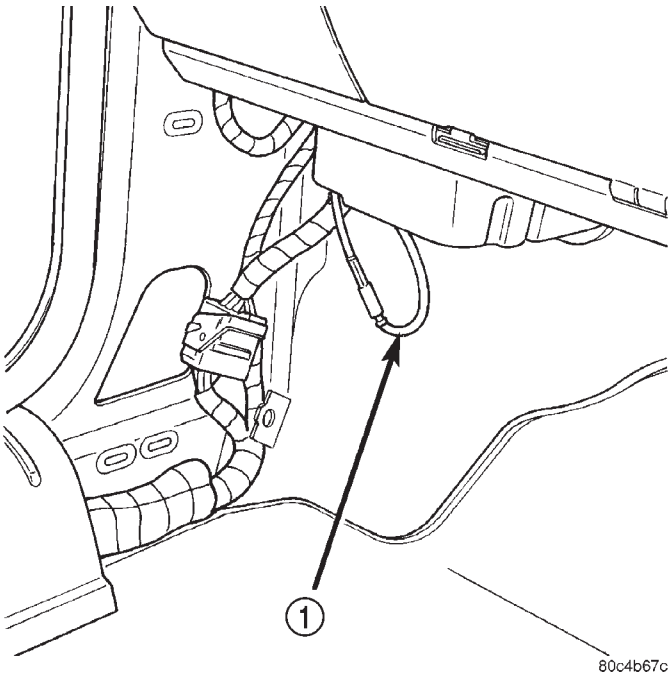

Fig. 4 Antenna Lead Location - RHD shown (LHD symmetrically opposite)

1 – ANTENNA CABLE

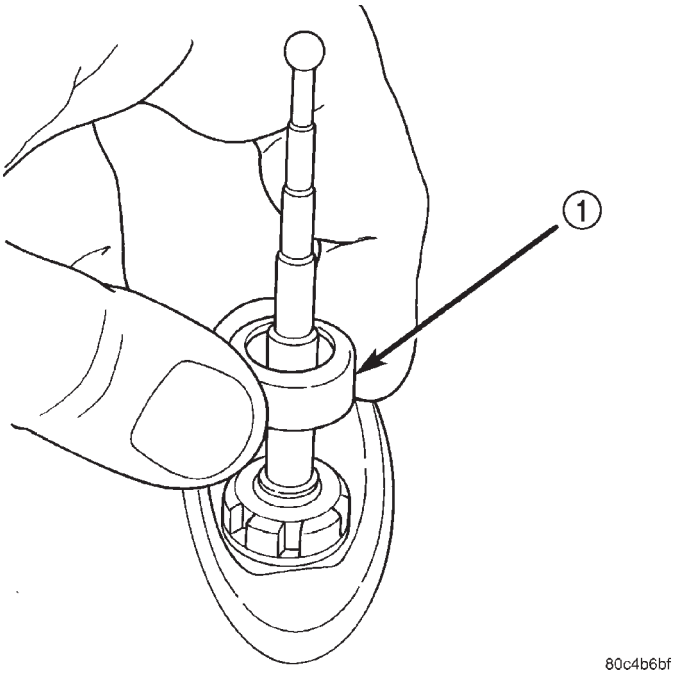

Fig. 5 Removing Nut Shroud

1 – NUT SHROUD

REMOVAL AND INSTALLATION (Continued)

(9) Remove antenna retaining nut (Fig. 6).

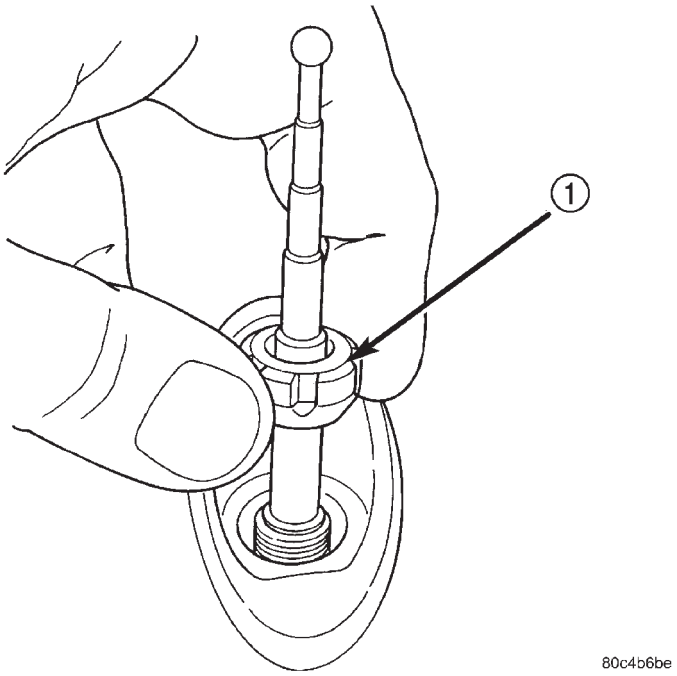

Fig. 6 Removing Antenna Nut

1 – CAP NUT

(10) Remove the antenna escutcheon (Fig. 7).

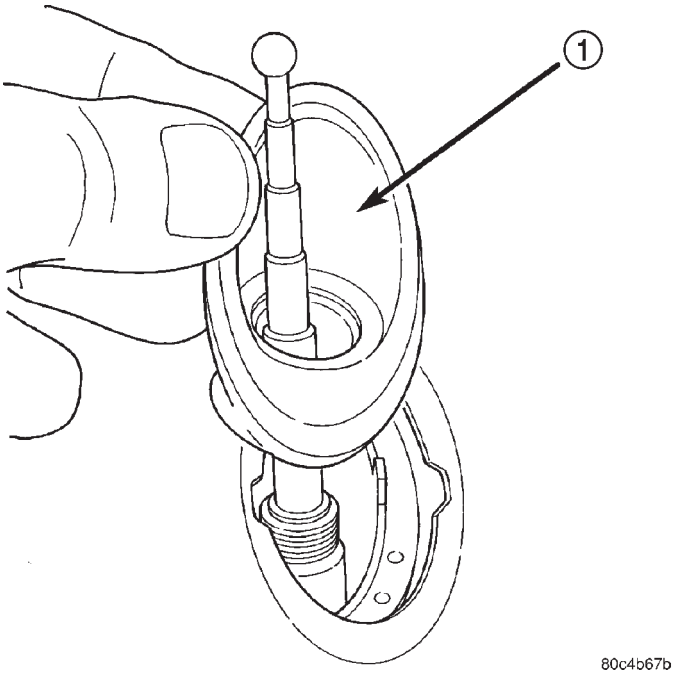

Fig. 7 Removing Antenna Escutcheon

1 – ESCUTCHEON

(11) Working through the wheel well, remove the antenna assembly from the vehicle.

INSTALLATION

(1) Position antenna assembly and push antenna lead through the hole in A-pillar. Install sealing grommet.

(2) Install air blocker and wheel well trim retaining screws.

(3) Install the antenna escutcheon (Fig. 7).

(4) Install antenna retaining nut (Fig. 6). Be certain antenna locating tabs are properly positioned for installation (Fig. 8). Torque nut to 6.8 N·m (60 in. lbs.).

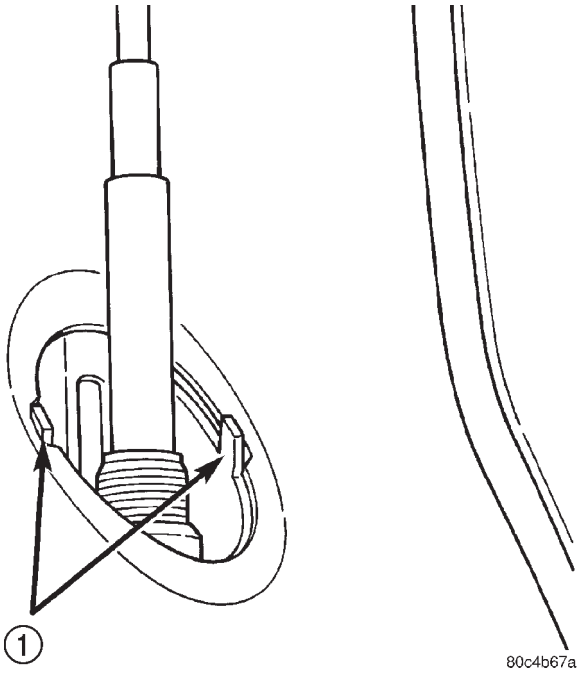

Fig. 8 Antenna Locating Tabs

1 – ANTENNA LOCATING TABS

(5) Install antenna retaining nut shroud (Fig. 5).

(6) Working inside the vehicle, connect the antenna lead wires and install the cowl trim panel.

(7) Verify proper operation of the antenna.

(8) If OK, remove masking tape and lower the vehicle from the hoist.

REMOVAL AND INSTALLATION (Continued)

ANTENNA MAST

REMOVAL

(1) Turn ignition key to the “off” position.
(2) Mask area around antenna with masking tape to prevent vehicle paint damage.
(3) Remove antenna retaining nut shroud (Fig. 9).

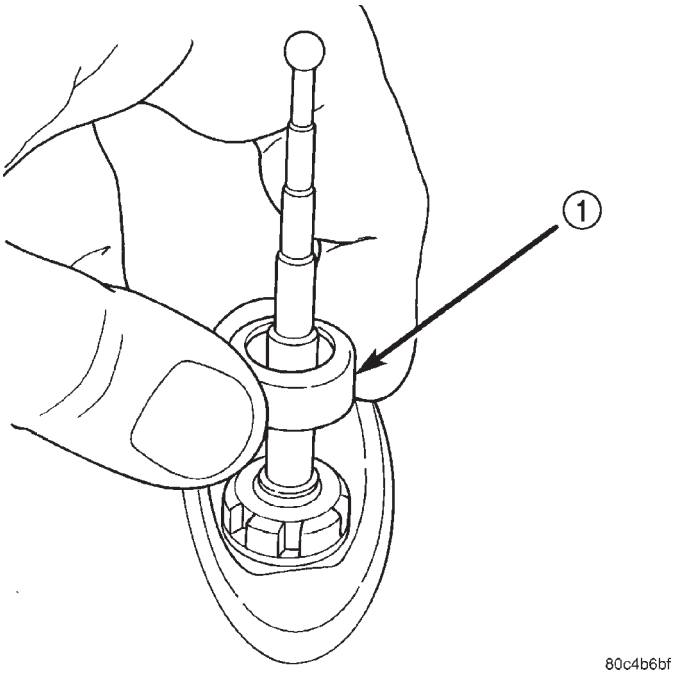

Fig. 9 Removing Nut Shroud

1 – NUT SHROUD

(4) Remove antenna retaining nut (Fig. 10)
(5) Using water and / or compressed air clean area around antenna mast. This will ease the mast removal and installation procedure.
(6) Using appropriate tool, grasp antenna mast and pull straight up to remove the mast from the antenna base. If antenna mast cannot be removed the entire antenna assembly must be replaced.

INSTALLATION

(1) Install replacement antenna mast by sliding down into the antenna base. The antenna nut is used to lock mast in position.

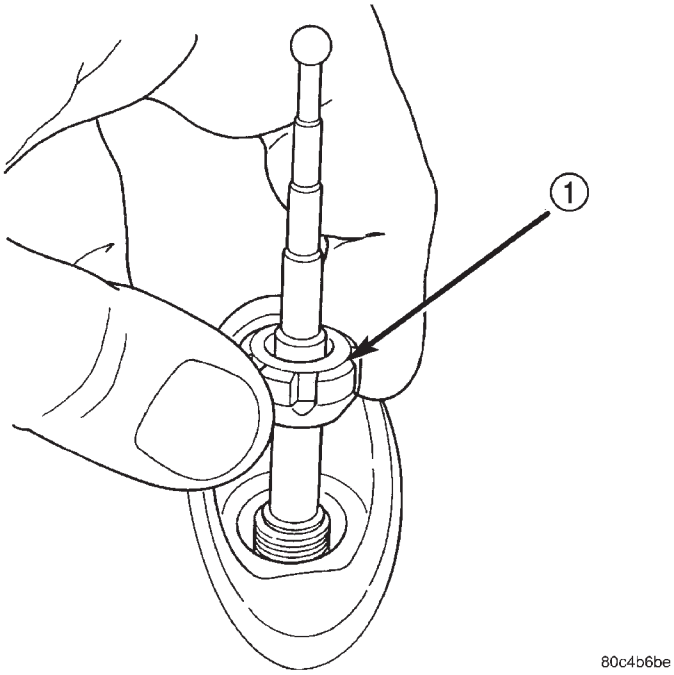

Fig. 10 Removing Antenna Nut

1 – CAP NUT

(2) Install antenna retaining nut (Fig. 10). Torque nut to 6.8 N·m (60 in. lbs.).
(3) Install antenna retaining nut shroud (Fig. 9).
(4) Verify proper operation of the antenna.

SPECIAL TOOLS

AUDIO SYSTEMS

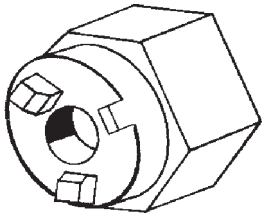

Antenna Nut Wrench C-4816

HORN SYSTEM

TABLE OF CONTENTS

	page
DESCRIPTION AND OPERATION	
HORN SYSTEM	1
HORN RELAY	1
HORN SWITCH	2
DIAGNOSIS AND TESTING	
HORN TEST	2
HORN RELAY TEST	2
HORN SWITCH TEST	3
HORN SYSTEM TEST	3
REMOVAL AND INSTALLATION	
HORN	5
HORN RELAY	5
HORN SWITCH	5

DESCRIPTION AND OPERATION

HORN SYSTEM

WARNING: ON VEHICLES EQUIPPED WITH AN AIRBAG, REFER TO RESTRAINT SYSTEMS FOR WARINGS AND CAUTIONS BEFORE SERVICING ANY PART OF THE HORN SWITCH OR CLOCKSPRING..

DESCRIPTION

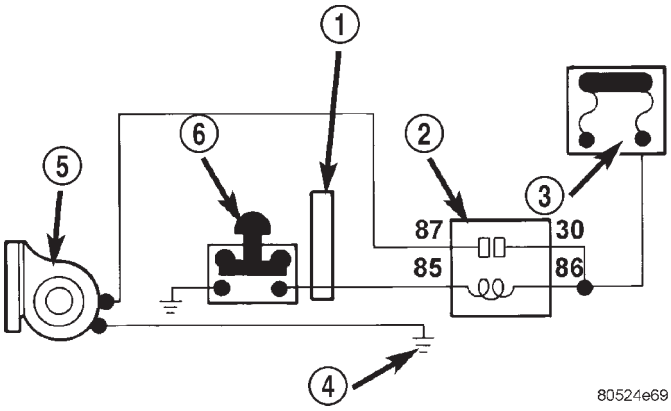

Fig. 1 Horn System

1 – CLOCK SPRING
2 – HORN RELAY
3 – 15 AMP FUSE
4 – HEAD LAMP GROUND
5 – HORN
6 – HORN SWITCH

The horn circuit consists of:
- Horn Switch
- Clockspring
- Horn Relay
- Horn Assembly
- Wiring Harness

The horn circuit feed is from the fuse in the fuse block to the horn relay in the Power Distribution Center (PDC). The PDC is mounted behind the battery tray in the left side of the engine compartment.

OPERATION

When the horn switch is depressed, it completes the ground circuit. The horn relay coil closes contacts and allows current to flow to the horn. The horn is grounded to the headlamp ground connection.

HORN RELAY

DESCRIPTION

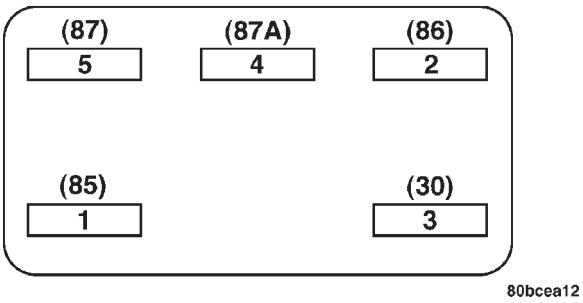

Fig. 2 Horn Relay

The horn relay is a International Standards Organization (ISO) micro-relay. The terminal designations and functions are the same as a conventional ISO relay. However, the micro-relay terminal orientation (or footprint) is different, current capacity is lower, and the relay case dimensions are smaller than on the conventional ISO relay.

OPERATION

The horn relay is a electromechanical device that switches current to the horn when the Driver Airbag Module Cover is depressed. See the Diagnosis and Testing section of this group for more information on the operation of the horn relay.

DESCRIPTION AND OPERATION (Continued)

The horn relay is located in the PDC. Refer to the PDC label for horn relay identification and location.

If a problem is encountered with a continuously sounding horn, it can usually be quickly resolved by removing the horn relay from the PDC until further diagnosis is completed. The horn relay cannot be repaired and, if faulty, it must be replaced.

HORN SWITCH

WARNING: ON VEHICLES EQUIPPED WITH AN AIRBAG, REFER TO RESTRAINT SYSTEMS FOR STEERING WHEEL REMOVAL.

DESCRIPTION

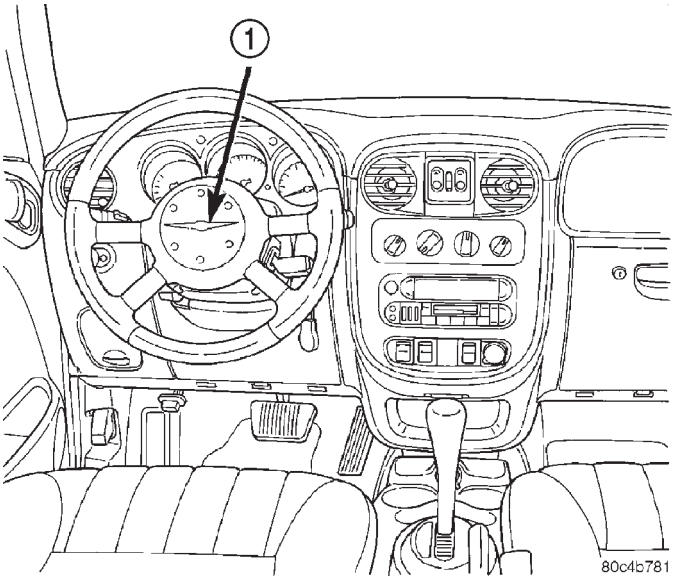

Fig. 3 Horn Switch Location

1 – HORN SWITCH

The horn switch is mounted inside the cover of the Driver Airbag Module.

OPERATION

When the Driver Airbag Cover is pressed, the horn switch makes contact to ground. The ground signal is carried to the horn relay and the horn sounds. The horn switch grounds to the airbag housing.

DIAGNOSIS AND TESTING

HORN TEST

(1) Disconnect wire connector at horn.

(2) Using a voltmeter, connect one lead to ground terminal and the other lead to the positive wire terminal (Fig. 4).

HORN CONNECTOR PIN CALL-OUT

PIN #	CIRCUIT NAME
1	GROUND
2	HORN RELAY OUTPUT

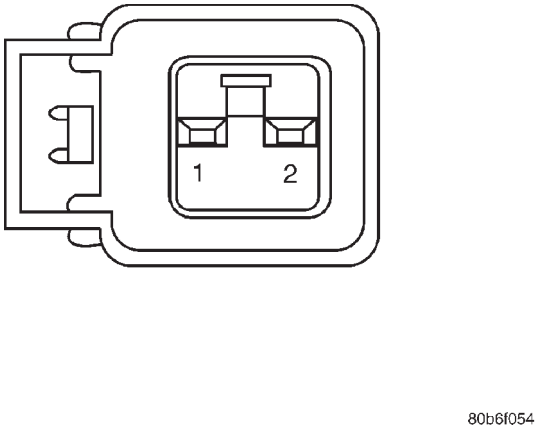

Fig. 4 Horn Harness Connector

(3) Depress the horn switch, battery voltage should be present.

(4) If no voltage, refer to Horn System Test. If voltage is OK, go to Step 5.

(5) Using ohmmeter, test ground wire for continuity to ground.

(6) If no ground repair as necessary.

(7) If wires test OK and horn does not sound, replace horn.

HORN RELAY TEST

(1) Remove horn relay from Power Distribution Center (PDC).

(2) Using ohmmeter, test for continuity between ground and circuit 65 of horn relay. Refer to Wiring Diagrams for circuit information.

(a) When the horn switch is not depressed, no continuity should be present.

(b) Continuity to ground when horn switch is depressed.

(c) If continuity is not correct repair horn switch or wiring as necessary, refer to Wiring Diagrams.

(3) Insert a jumper wire between circuit 63 and 66 of the PDC.

(a) If horn sounds replace relay.

(b) If the horn does not sound, install horn relay and refer to Horn Test.

(4) Using a voltmeter, test voltage at:

(a) Circuit 62 and 66 test for battery voltage from fuse C to body ground.

(b) If voltage is incorrect repair as necessary. Refer to Wiring Diagrams.

DIAGNOSIS AND TESTING (Continued)

(5) Check relay for 70 to 75 ohms resistance from terminal 85 to 86 (Fig. 2). If resistance not OK, replace relay.

HORN SWITCH TEST

(1) The horn switch grounds to the airbag housing.

(2) If the horn does not sound check for corrosion at:

- Horn wire
- Horn switch ground connected to airbag metal housing
- Airbag to steering wheel
- Ensure horn wire is properly connected and insulator is in place on wire

(3) Refer to Wiring Diagrams if wire circuit needs to be repaired.

(4) Remove horn relay from the Power Distribution Center.

(5) Using ohmmeter, connect one lead to ground and the other lead to cavity 65 of the power distribution center. Refer to Wiring Diagrams.

(6) Depress horn switch, there should have continuity. If no continuity, go to Step 7.

(7) Test continuity at horn switch, remove the Driver Airbag Module. Refer to Restraint Systems, Driver Airbag Module Removal and Installation.

(8) Using an ohmmeter, connect one lead to the airbag module ground and the other lead to the horn connector. Refer to Wiring Diagrams and (Fig. 4).

(9) Depress the horn switch, and the meter should show continuity. If there is no continuity, replace the Driver Airbag Module. If there is continuity, repair as necessary.

HORN SYSTEM TEST

Refer to Horn System Test table. If the horn does not sound, check the horn fuse located in the Power Distribution Center. If the fuse is blown, replace with the correct fuse. If the horn fails to sound and the new fuse blows when depressing the horn switch, a short circuit in the horn or the horn wiring between the fuse terminal and the horn is responsible, or a defective horn switch allowed the horn to burn out is responsible.

(1) If the fuse is OK, test horn relay. Refer to Horn Relay Test.

(2) If the relay is OK, test horn. Refer to Horn Test.

CAUTION: Continuous sounding of horn will cause horn to fail.

Should the horn sound continuously:

- Unplug the horn relay from Power Distribution Center (PDC).
- Refer to Horn Relay Test.

Refer to Wiring Diagrams for circuit and wiring information.

DIAGNOSIS AND TESTING (Continued)

HORN SYSTEM TEST

CONDITION	POSSIBLE CAUSE	CORRECTION
HORN SOUNDS CONTINUOUSLY. NOTE: IMMEDIATELY UNPLUG HORN RELAY IN THE (PDC)	(1) FAULTY HORN RELAY. (2) HORN CONTROL CIRCUIT TO RELAY SHORTED TO GROUND. (3) PINCHED HORN SWITCH WIRE UNDER DRIVER AIRBAG MODULE. (4) DEFECTIVE HORN SWITCH	(1) REFER TO HORN RELAY TEST IN THIS SECTION. (2) CHECK TERMINAL 65 IN PDC FOR CONTINUITY TO GROUND. IF CONTINUITY TO GROUND INDICATES: (A) STEERING WHEEL HORN SWITCH/ LEAD SHORTED TO GROUND. (B) WIRING HARNESS SHORTED TO GROUND. FIND THE SHORT AND REPAIR AS NECESSARY. (3) REPLACE DRIVER AIRBAG MODULE. (4) REPLACE DRIVER AIRBAG MODULE.
HORN SOUND INTERMITTENTLY AS THE STEERING WHEEL IS TURNED.	(1) HORN RELAY CONTROL CIRCUIT X3 IS SHORTED TO GROUND INSIDE STEERING WHEEL. (2) PINCHED HORN SWITCH WIRE UNDER DRIVER AIRBAG MODULE (3) DEFECTIVE HORN SWITCH	(1) REMOVE DRIVER AIRBAG MODULE AND/OR STEERING WHEEL. CHECK FOR RUBBING OR LOOSE WIRE/ CONNECTOR, REPAIR AS NECESSARY. (2) REPLACE DRIVER AIRBAG MODULE. (3) REPLACE DRIVER AIRBAG MODULE.
HORN DOES NOT SOUND	(1) CHECK FUSE 23 IN PDC (2) NO VOLTAGE AT HORN RELAY TERMINALS 62 & 66, AND FUSE IS OK. (3) OPEN CIRCUIT FROM TERMINAL 65 OF THE HORN RELAY TO HORN SWITCH X3 CIRCUIT. (4) DEFECTIVE OR DAMAGED HORN. (5) DEFECTIVE HORN SWITCH	(1) REPLACE FUSE IF BLOWN REPAIR AS NECESSARY. (2) NO VOLTAGE, REPAIR PDC AS NECESSARY. (3) REPAIR CIRCUIT AS NECESSARY. (4) VOLTAGE AT HORN WHEN HORN SWITCH IS PRESSED, REPLACE HORN. (5) REPLACE DRIVER AIRBAG MODULE.
FUSE BLOWS WHEN HORN SOUNDS	(1) SHORT CIRCUIT IN HORN OR HORN WIRING	(1) REMOVE HORN RELAY, CHECK FOR SHORTED HORN OR HORN WIRING. DISCONNECT HORN WIRE HARNESS TO ISOLATE SHORT AND REPAIR AS NECESSARY.
FUSE BLOWS WITHOUT BLOWING HORN NOTE: FOR WIRING REPAIRS REFER TO WIRING DIAGRAMS.	(1) SHORT CIRCUIT	(1) REMOVE RELAY, INSTALL NEW FUSE, IF FUSE DOES NOT BLOW REPLACE HORN RELAY. IF FUSE BLOWS WITH RELAY REMOVED, CHECK FOR SHORT TO GROUND WITH OHMMETER ON CIRCUIT BETWEEN TERMINALS 62 & 66 AND THE FUSE TERMINAL. REPAIR AS NECESSARY.

REMOVAL AND INSTALLATION

HORN

REMOVAL

(1) Open hood.

(2) Disconnect and isolate the battery negative cable (Fig. 5).

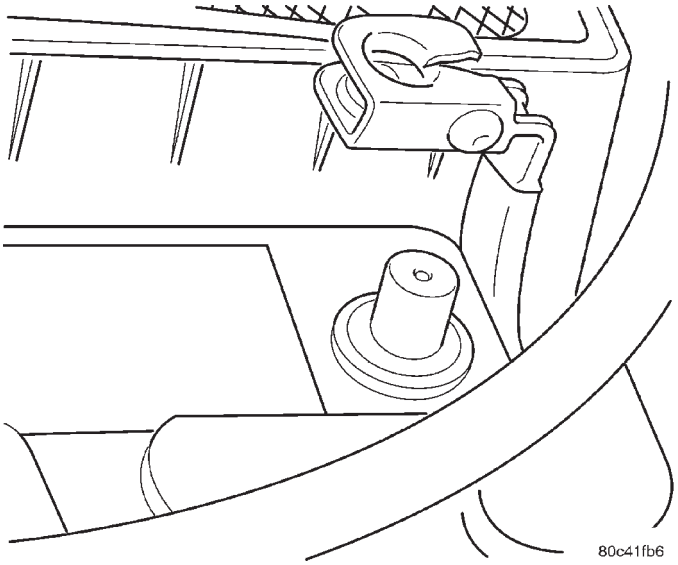

Fig. 5 Battery Negative Cable Remove/Install

(3) Remove the left front wheelhouse splash shield. Refer to Body, Removal and Installation, Front Wheelhouse Splash Shield.

(4) Disconnect the harness connector.

(5) Remove the two screws holding the horn assembly to the vehicle (Fig. 6).

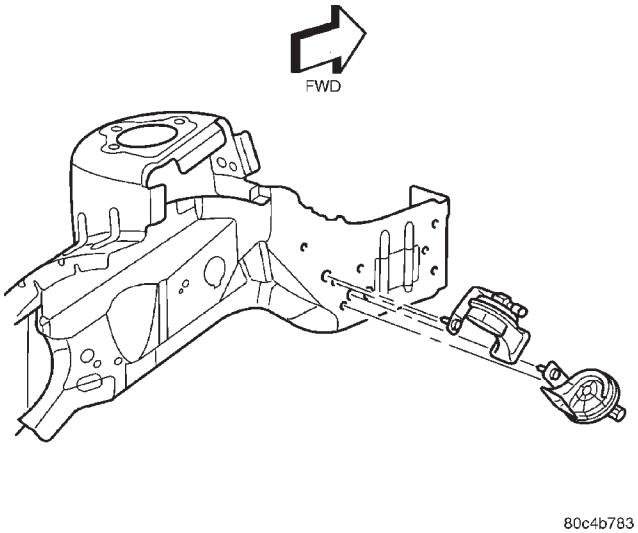

Fig. 6 Horn Assembly Remove/Install

NOTE: Both horns are removed the same way after the wheelhouse splash shield has been removed.

INSTALLATION

(1) Install the two screws holding the horn assembly to the vehicle (Fig. 6).

(2) Connect the harness connector.

(3) Install the left front wheelhouse splash shield. Refer to Body, Removal and Installation, Front Wheelhouse Splash Shield.

(4) Connect the battery negative cable (Fig. 5).

(5) Close hood.

(6) Verify operation of vehicle and systems.

HORN RELAY

REMOVAL

(1) Open hood.

(2) Disconnect and isolate the battery negative cable (Fig. 5).

(3) Remove the Power Distribution Center (PDC) cover and locate the horn relay (Fig. 7).

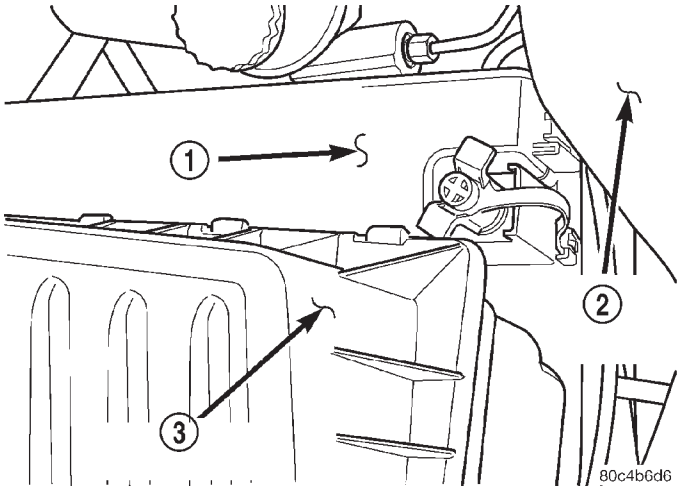

Fig. 7 Power Distribution Center (PDC) Location

1 – POWER DISTRIBUTION CENTER (PDC)
2 – LEFT STRUT TOWER
3 – AIR CLEANER BOX COVER

(4) Remove the horn relay.

INSTALLATION

(1) Install the horn relay.

(2) Install the PDC cover (Fig. 7).

(3) Connect the battery negative cable (Fig. 5).

(4) Close hood.

(5) Verify operation of vehicle and systems.

HORN SWITCH

WARNING: ON VEHICLES EQUIPPED WITH AN AIRBAG, REFER TO RESTRAINT SYSTEMS FOR WARNINGS AND CAUTIONS BEFORE SERVICING THE HORN SWITCH.

REMOVAL AND INSTALLATION (Continued)

REMOVAL

(1) Open hood.

(2) Disconnect and isolate the battery negative cable (Fig. 5).

(3) Remove the driver airbag module. Refer to Restraint Systems, Removal and Installation, Driver Airbag Module.

(4) With the driver airbag module on the bench, remove the one nut to the inflator retaining the ground eyelet for the horn switch (Fig. 8).

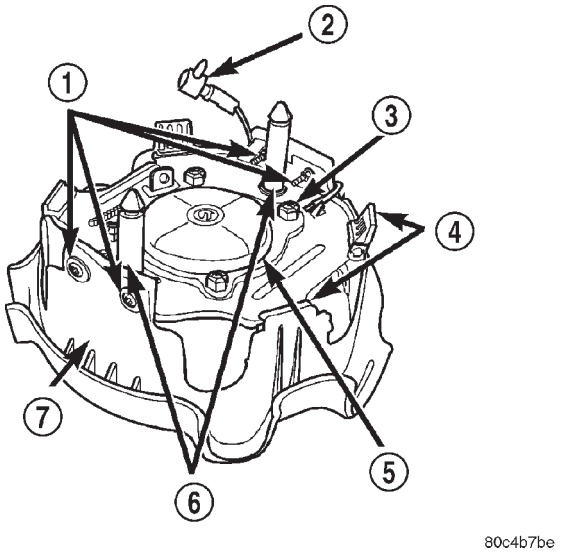

Fig. 8 Driver Airbag Module/Module Cover/Horn Switch

1 – AIRBAG COVER/HORN SWITCH RETAINING SCREWS
2 – HORN SWITCH BATTERY FEED
3 – HORN SWITCH GROUND
4 – COVER/SWITCH RETAINING
5 – INFLATOR
6 – AIRBAG MODULE RETAINING PINS
7 – AIRBAG MODULE/COVER/HORN SWITCH

(5) Remove the horn switch battery feed from the retainer on the airbag module (Fig. 8).

(6) Remove the four screws holding the airbag cover/horn switch to the airbag module (Fig. 8).

(7) Release the four clips on the airbag cover/horn switch to the airbag module (Fig. 8).

(8) Remove cover from module (Fig. 9).

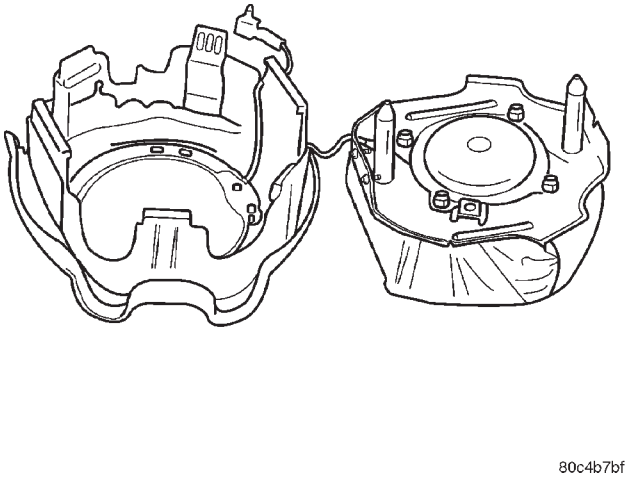

Fig. 9 Driver Airbag Module/Module Cover/Horn Switch - Remove/Install

INSTALLATION

(1) Install module into new horn switch/airbag cover (Fig. 9).

(2) Install the four screws holding the airbag cover/horn switch to the airbag module (Fig. 8) and torque to 1.5-2.5 N·m (12-21 in. lbs.).

(3) Install the horn switch battery feed into the retainer on the airbag module (Fig. 8).

(4) Install the one nut to the inflator retaining the ground eyelet for the horn switch (Fig. 8) and torque to 6-8 N·m (53-71 in. lbs.).

(5) Install the driver airbag module. Refer to Restraint Systems, Removal and Installation, Driver Airbag Module.

(6) Connect the battery negative cable (Fig. 5).

(7) Close hood.

(8) Verify vehicle and system operation.

VEHICLE SPEED CONTROL SYSTEM

TABLE OF CONTENTS

page

DESCRIPTION AND OPERATION
SPEED CONTROL SYSTEM 1
SPEED CONTROL SERVO-PCM OUTPUT. 2
SPEED CONTROL SWITCHES 2
INTERACTIVE SPEED CONTROL 3
BRAKE LAMP SWITCH. 4
SERVO CABLE 4
POWERTRAIN CONTROL MODULE 4
VACUUM RESERVOIR 5
VEHICLE SPEED AND DISTANCE. 5
ROAD TEST 5
CHECKING FOR DIAGNOSTIC CODES 5

REMOVAL AND INSTALLATION
SERVO 6
SPEED CONTROL SWITCH. 6
SPEED CONTROL SERVO CABLE. 7
VACUUM RESERVOIR 8

DESCRIPTION AND OPERATION

SPEED CONTROL SYSTEM

DESCRIPTION

The speed control system is electronically controlled and vacuum operated. The electronic control is integrated into the Powertrain Control Module, located on the left side of the engine compartment next to the air cleaner. The controls are located on the steering wheel and consist of a single switch. The ON, OFF, RESUME, ACCEL, SET, COAST, and CANCEL, lever is located on the right of the steering wheel (Fig. 1). For identification and location of the major components (Fig. 2).

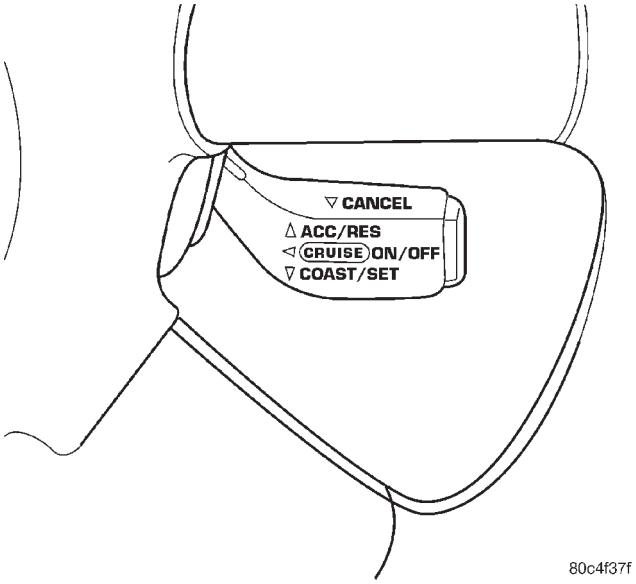

Fig. 1 Speed Control Switch

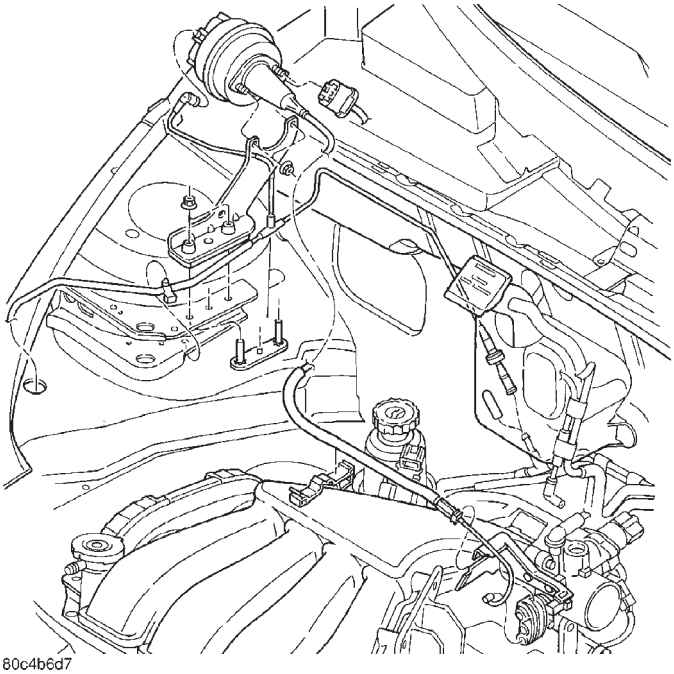

Fig. 2 Speed Control System

The system is designed to operate at speeds above 25 mph (40 km/h).

WARNING: THE USE OF SPEED CONTROL IS NOT RECOMMENDED WHEN DRIVING CONDITIONS DO NOT PERMIT MAINTAINING A CONSTANT SPEED, SUCH AS IN HEAVY TRAFFIC OR ON ROADS THAT ARE WINDING, ICY, SNOW COVERED, OR SLIPPERY.

OPERATION

When speed control is activated by depressing the ON switch, the PCM allows a set speed to be stored

DESCRIPTION AND OPERATION (Continued)

in RAM for speed control. To store a set speed, depress the SET switch while the vehicle is moving at a speed between 25 and 85 mph. In order for the speed control to engage, the brakes cannot be applied, nor can the gear selector be indicating the transmission is in Park or Neutral.

The speed control can be disengaged manually by:

- Stepping on the brake pedal
- Depressing the OFF switch
- Depressing the CANCEL switch.
- Depressing the clutch pedal

NOTE: Depressing the OFF switch or turning off the ignition switch will erase the set speed stored in the PCM.

For added safety, the speed control system is programmed to disengaged for any of the following conditions:

- An indication of Park or Neutral
- A rapid increase rpm (indicates that the clutch has been disengaged)
- Excessive engine rpm (indicates that the transmission may be in a low gear)
- The speed signal increases at a rate of 10 mph per second (indicates that the co-efficient of friction between the road surface and tires is extremely low)
- The speed signal decreases at a rate of 10 mph per second (indicates that the vehicle may have decelerated at an extremely high rate)

Once the speed control has been disengaged, depressing the RESUME switch when speed is greater than 25 mph allows the vehicle to resume control to the target speed that was stored in the PCM.

While the speed control is engaged, the driver can increase the vehicle speed by depressing the ACCEL switch. The new target speed is stored in the PCM when the ACCEL switch is released. The PCM also has a “tap-up” feature in which target speed increases by 2 mph for each momentary switch activation of the ACCEL switch. The PCM also provides a means to decelerate to a new lower target speed without disengaging speed control. Depress and hold the COAST switch until the desired speed is reached, then release the switch.

SPEED CONTROL SERVO-PCM OUTPUT

DESCRIPTION

The servo unit consists of a solenoid valve body, and a vacuum chamber. The solenoid valve body contains three solenoids:

- Vacuum
- Vent
- Dump

The vacuum chamber contains a diaphragm with a cable attached to control the throttle linkage.

OPERATION

The PCM controls the solenoid valve body. The solenoid valve body controls the application and release of vacuum to the diaphragm of the vacuum servo. The servo unit cannot be repaired and is serviced only as a complete assembly.

Power is supplied to the servo by the PCM through the brake switch. The PCM controls the ground path for the vacuum and vent solenoids.

The dump solenoid is energized anytime it receives power. If power to the dump solenoid is interrupted, the solenoid dumps vacuum in the servo. This provides a safety backup to the vent and vacuum solenoids.

The vacuum and vent solenoids must be grounded at the PCM to operate. When the PCM grounds the vacuum servo solenoid, the solenoid allows vacuum to enter the servo and pull open the throttle plate using the cable. When the PCM breaks the ground, the solenoid closes and no more vacuum is allowed to enter the servo. The PCM also operates the vent solenoid via ground. The vent solenoid opens and closes a passage to bleed or hold vacuum in the servo as required.

The PCM duty cycles the vacuum and vent solenoids to maintain the set speed, or to accelerate and decelerate the vehicle. To increase throttle opening, the PCM grounds the vacuum and vent solenoids. To decrease throttle opening, the PCM removes the grounds from the vacuum and vent solenoids.

SPEED CONTROL SWITCHES

DESCRIPTION

A stalk extending from the right side of the steering wheel hub. It rotates with the steering wheel.The switch cannot be repaired. If the switch fails, the entire switch module must be replaced.

OPERATION

The speed control system has five separate voltage inputs that are provided from a single multiplexed (MUX) switch that supply’s differant voltage inputs to the PCM. The switch names are: ON, OFF, SET, COAST, RESUME, ACCEL, and CANCEL. Based on conditions when the buttons or lever is pushed or pulled (and released), the five voltages ranges provided to the PCM result in the following functions: ON, OFF, SET, COAST, RESUME, ACCEL, and CANCEL.

All the functions are included, but they operation of the switch is different then most other applications. A push button in the end of the stalk toggles

DESCRIPTION AND OPERATION (Continued)

the system voltage between turning the speed control system on (for the first press) and off (for the second press). The Word Cruise will then illuminate on the cluster. Pushing the stalk down sets the cruise to maintain the current vehicle speed and is set into memory. Holding the stalk down allows the vehicle to coast to a lower speed. Pushing the stalk up causes the vehicle to resume the previously set speed that is set in memory. Holding it in the up position causes the vehicle speed to increase until the switch is released or the maximum allowable set speed is reached. Pulling the stalk toward the steering wheel cancels the operation of the speed control, allowing the vehicle to coast, but retaining the set speed in memory. Moving the stalk up momentarily causes the set speed to in crease by 2 mph (3.2 km/hr). Repeated movement of the stalk in the same direction has a cumulative effect on the set speed. The minimum set speed is reduced to 25 mph (40 km/hr) and a maximum set speed is 85 mph (137 km/hr).

INTERACTIVE SPEED CONTROL

Automatic transmission only.

DESCRIPTION

Interactive means that communication between the PCM and the TCM is taking place. Interactive speed control avoids unnecessary shifting for smoother, quieter operation and when downshifts are required, makes the shifts smoother.

CLIMBING A GRADE

DESCRIPTION

When climbing a grade the interactive speed control tries to maintain the set speed by increasing the throttle opening, while inability/delaying downshifts.

OPERATION

If opening the throttle alone cannot maintain the set speed and the vehicle speed drops more than three mph below the set speed, the transmission will downshift to third gear. If the vehicle continues to lose speed, by more than 6 mph, the transmission will downshift again maintain the set speed. After the vehicle encounters a less-steep grade, or has crested the grade (reduced the load on the powertrain) and can maintain the set speed at a reduced throttle position, the transmission will upshift, as appropriate, until the set speed can be maintained in Overdrive.

DOWNSHIFT DELAY

DESCRIPTION

Downshift delay features have been added to reduce the number and frequency of downshifts when operating in hilly or mountainous country.

OPERATION

While operating, interactive speed control delays or avoids downshifts by allowing up to nearly wide open throttle without the TCM scheduling a downshift. If the interactive speed control is not engaged or the throttle is manually overridden by the driver while interactive speed control is engaged, the downshift delay feature is not activated.

Torque converter lock and unlock shifts are not affected by the downshift delay feature and will occur at the same throttle angle at a given speed regardless of whether interactive speed control operates or not.

GRADE HUNTING

DESCRIPTION

All vehicles equipped with a four speed automatic transmission have a grade hunting feature for the 2nd to 3rd gear upshift and the 3rd to Overdrive upshift.

OPERATION

The TCM identifies the powertrain loading conditions and selects the proper gear to maintain the current vehicle speed. Under moderate loading conditions the transaxle will stay in 3rd gear until the top of the grade is reached or the powertrain loading is reduced.

If powertrain loading is severe, the transaxle may shift into 2nd gear and remain there until powertrain loading is reduced, then a 2nd to 3rd gear upshift will be scheduled. Grade hunting features always operate regardless of whether or not the interactive speed control is engaged. **If the interactive speed control is not engaged and powertrain loading is not reduced, the driver may have to completely lift off of the throttle before an upshift will occur**. If the driver does lift off the throttle to induce an upshift under these conditions, vehicle speed will reduce and the Overdrive to 3rd and 3rd to 2nd gear downshifts will reoccur when the throttle is reapplied. If grade hunting is repeatedly induced by the driver, transaxle damage may result.

DESCRIPTION AND OPERATION (Continued)

AUTOMATIC SPEED CONTROL OVERSPEED REDUCTION

DESCRIPTION

Transmission control software includes an automatic speed control overspeed reduction feature. This maintains vehicle speed at the selected set point when descending a grade.

OPERATION

The Transmission Control Module (TCM) first senses that the speed control is set. If the set speed is exceeded by more than 4 mph (6.5 km/hr) and the throttle is closed, the TCM causes the transaxle to downshift to THIRD gear. After downshifting, the automatic speed control resumes normal operation. To ensure that an upshift is appropriate after the set speed is reached, the TCM waits until the speed control system opens the throttle at least 6 degrees before upshifting to OVERDRIVE again.

If the driver applies the brakes, canceling automatic speed control operation with the transaxle still in THIRD gear, the TCM maintains this gear until the driver opens the throttle at least 6 degrees to avoid an inappropriate upshift. The upshift is also delayed for 2.5 seconds after reaching the 6 degrees throttle opening in anticipation that the driver might open the throttle enough to require THIRD gear. This will avoid unnecessary and disturbing transmission cycling. If the automatic speed control RESUME feature is used after braking, the upshift is delayed until the set speed is achieved to reduce cycling and provide better response.

BRAKE LAMP SWITCH

DESCRIPTION

The switch is mounted on the brake pedal mounting bracket under the instrument panel.

OPERATION

Vehicles equipped with the speed control option use a dual function brake lamp switch. The PCM monitors the state of the dual function brake lamp switch. Refer to the Brake section for more information on brake lamp switch service and adjustment procedures.

The brake switch is equipped with three sets of contacts, one normally open and the other two normally closed (brakes disengaged). The PCM sends a 12 volt signal to one of the normally closed contacts in the brake switch, which is returned to the PCM as a brake switch state signal. With the contacts closed, the 12 volt signal is pulled to ground causing the signal to go low. The low voltage signal, monitored by the PCM, indicates that the brakes are not applied. When the brakes are applied, the contacts open, causing the PCM's output brake signal to go high, disengaging the speed control, cutting off PCM power to the speed control solenoids.

The second set of normally closed contacts supplies 12 volts from the PCM any time speed control is turned on. Through the brake switch, current is routed to the speed control servo solenoids. The speed control solenoids (vacuum, vent and dump) are provided this current any time the speed control is ON and the brakes are disengaged.

When the driver applies the brakes, the contacts open and current is interrupted to the solenoids. The normally open contacts are fed battery voltage. When the brakes are applied, battery voltage is supplied to the brake lamps.

SERVO CABLE

DESCRIPTION

The speed control servo cable is connected between the speed control vacuum servo diaphragm and the throttle body control linkage.

OPERATION

This cable causes the throttle control linkage to open or close the throttle valve in response to movement of the vacuum servo diaphragm.

POWERTRAIN CONTROL MODULE

DESCRIPTION

The PCM is located in the engine compartment.

OPERATION

The speed control electronic control circuitry is integrated into the Powertrain Control Module (PCM). The PCM speed control functions are monitored by the On-Board Diagnostics (OBD). All OBD-sensed systems are monitored by the PCM. Each monitored circuit is assigned a Diagnostic Trouble Code (DTC). The PCM will store a DTC in electronic memory for any failure it detects. The PCM cannot be repaired and must be replaced if faulty.

USE THE DRB SCAN TOOL TO REPROGRAM THE NEW PCM WITH THE VEHICLES ORIGINAL IDENTIFICATION NUMBER (VIN) AND THE VEHICLES ORIGINAL MILEAGE. IF THIS STEP IS NOT DONE A DIAGNOSTIC TROUBLE CODE (DTC) MAY BE SET.

DESCRIPTION AND OPERATION (Continued)

VACUUM RESERVOIR

DESCRIPTION

The vacuum reservoir is located in the right front fender well on the frame rail (Fig. 3). It is made of plastic.

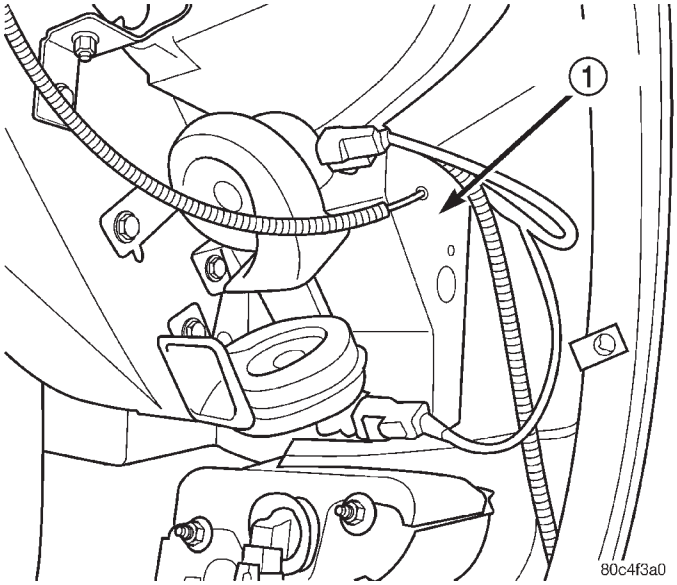

Fig. 3 Vacuum Reservoir

1 – VACUUM RESERVOIR

OPERATION

The reservoir stores engine vacuum in the reservoir. When engine vacuum drops, as in climbing a grade while driving, the reservoir supplies the vacuum needed to maintain proper speed control operation. The vacuum reservoir cannot be repaired and must be replaced if faulty.

VEHICLE SPEED AND DISTANCE

DESCRIPTION

The PCM receives a signal from the TCM and the transaxle output speed sensor over the bus communication line.

OPERATION

The 4 speed automatic Transmission Control Module (TCM) supplies the speed input to the PCM. The PCM determines acceleration rates. The speed control software in the PCM uses vehicle speed and acceleration to control to the set speed.

Vehicles with a manual transmission have a Vehicle Speed Sensor (VSS) mounted to an adapter near the transmission output shaft. The sensor is driven through the adapter by a speedometer pinion gear. The VSS pulse signal is monitored by the PCM to determine vehicle speed and to maintain speed control set speed. Refer to the appropriate Powertrain Diagnostic Procedures manual for diagnosis and testing of this component.

ROAD TEST

OPERATION

Perform a vehicle road test to verify reports of speed control system malfunction. The road test should include attention to the speedometer. Speedometer operation should be smooth and without flutter at all speeds.

Flutter in the speedometer indicates a problem which might cause surging in the speed control system. The cause of any speedometer problems should be corrected before proceeding. Refer to the Instrument Panel and Gauges for speedometer diagnosis.

If a road test verifies a surge following a set and the speedometer operates properly, check for:

If a road test verifies an inoperative system, and the speedometer operates properly, check for:

- A Diagnostic Trouble Code (DTC). If a DTC exists, conduct tests per the Powertrain Diagnostic Procedures service manual.
- A misadjusted brake (stop) lamp switch. This could also cause an intermittent problem.
- Loose or corroded electrical connections at the servo. Corrosion should be removed from electrical terminals and a light coating of Mopar Multipurpose Grease, or equivalent, applied.
- Leaking vacuum reservoir.
- Loose or leaking vacuum hoses or connections.
- Defective one-way vacuum check valve.
- Secure attachment at both ends of the speed control servo cable.
- Smooth operation of throttle linkage and throttle body air valve.
- Conduct electrical test at PCM.
- Failed speed control servo. Do the servo vacuum test.

CAUTION: When test probing for voltage or continuity at electrical connectors, care must be taken not to damage connector, terminals or seals. If these components are damaged, intermittent or complete system failure may occur.

CHECKING FOR DIAGNOSTIC CODES

OPERATION

When trying to verify a speed control system electronic malfunction: Connect a DRB scan tool if available to the data link connector. The connector is located at left side of the steering column, and at lower edge of the panel.

DESCRIPTION AND OPERATION (Continued)

A speed control malfunction may occur without a diagnostic code being indicated.

For further information and usage of the DRB scan tool and a more complete list of Diagnostic Trouble Code and No Trouble Codes, refer to the Powertrain Diagnostic Manual.

REMOVAL AND INSTALLATION

SERVO

REMOVAL

(1) Remove the air cleaner lid, and makeup air hose.

(2) Remove the negative battery cable.

(3) Remove two nuts attaching speed control cable and mounting bracket to servo (Fig. 4).

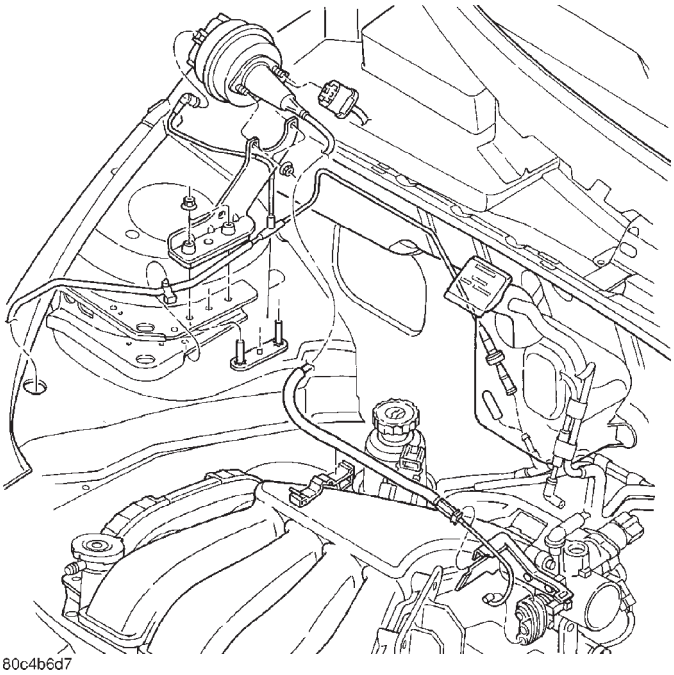

Fig. 4 Speed Control System

(4) Remove servo from the mounting bracket.

(5) Disconnect electrical connectors and vacuum hose.

(6) Remove the engine cover.

(7) Remove cable from throttle cam. Refer to Speed Control Servo Cable Removal/Installation in this section.

(8) Remove the 2 push nuts and discard.

(9) Remove clip attaching cable to servo (Fig. 5).

INSTALLATION

(1) Install hairpin clip to servo and cable (Fig. 5).

(2) Install servo studs through cable bell and then the bracket.

(3) Install nuts, tighten to 7 N·m (60 in. lbs.).

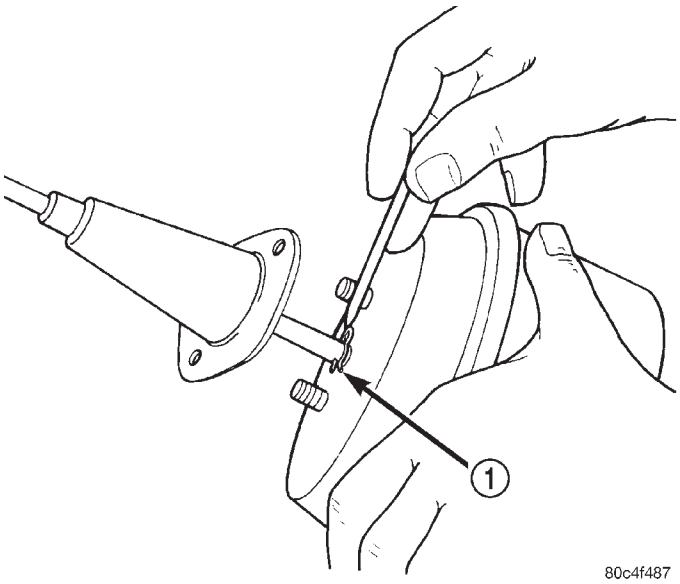

Fig. 5 Attaching Clip

1 – HAIRPIN CLIP

(4) Install speed control cable to throttle cam. Refer to Speed Control Servo Cable Removal/Installation in this section.

(5) Connect electrical connector.

(6) Connect the vacuum hose to servo.

(7) Install the engine cover.

(8) Install the negative battery cable.

(9) Install the air cleaner lid, and makeup air hose.

SPEED CONTROL SWITCH

The speed control switches is mounted in the steering wheel and wired through the clock spring device under the airbag module (Fig. 6).

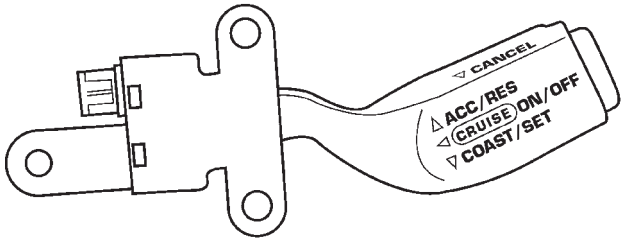

Fig. 6 Speed Control Switch

WARNING: IF REMOVAL OF AIRBAG MODULE IS NECESSARY, REFER TO THE RESTRAINT SYSTEMS.

REMOVAL AND INSTALLATION (Continued)

REMOVAL

(1) Remove the air cleaner lid, disconnect the inlet air temperature sensor and makeup air hose.
(2) Remove the negative battery cable.
(3) Turn off ignition.
(4) Remove air bag, refer to the Restraint systems section.
(5) Remove the top mounting screw (Fig. 7).

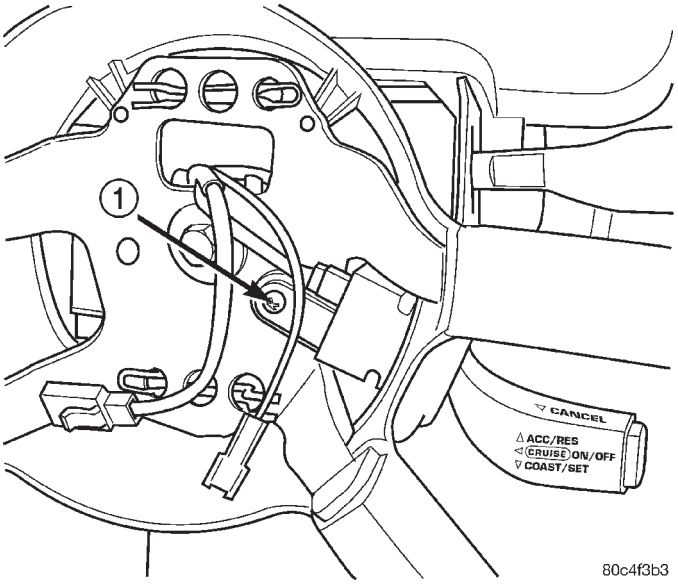

Fig. 7 Switch Top Mounting Screw

1 – TOP MOUNTING SCREW

(6) Rotate steering wheel so that the switch is in the 6 o'clock position. Remove 2 screws from the back side of the speed control switch.
(7) Disconnect the electrical connector.
(8) Remove switch (Fig. 8).

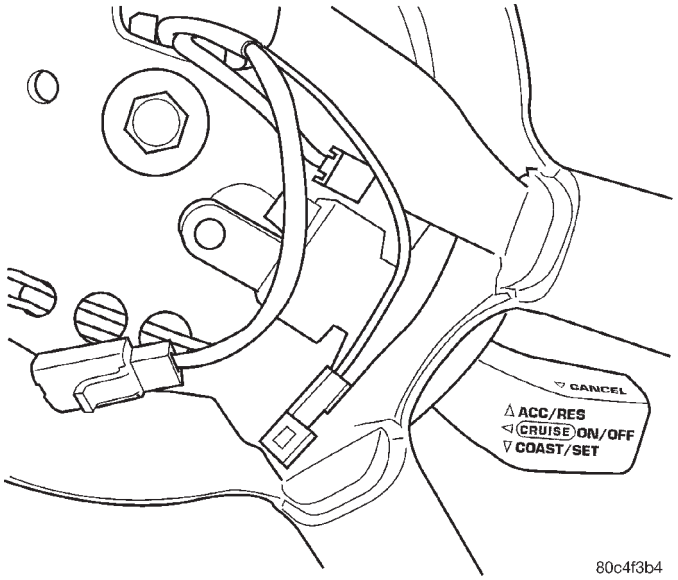

Fig. 8 Switch Removal

INSTALLATION

(1) Connect the electrical connector.
(2) Install switch (Fig. 8) and tighten the screws to 1.6 N·m (15 ins. lbs.). Make sure rubber seal is in place around switch.
(3) Install airbag, refer to the Restraint Systems section.
(4) Install the negative battery cable.
(5) Install the air cleaner lid, connect the inlet air temperature sensor and makeup air hose.

SPEED CONTROL SERVO CABLE

REMOVAL

(1) Remove the air cleaner lid, and makeup air hose.
(2) Remove the negative battery cable.
(3) Remove the engine cover and throttle control shield, if equipped.
(4) Remove two nuts attaching speed control cable and mounting bracket to servo (Fig. 12).
(5) Remove servo from the mounting bracket.
(6) Disconnect electrical connectors and vacuum hose.
(7) Remove retaining clip holding cable to servo (Fig. 9).

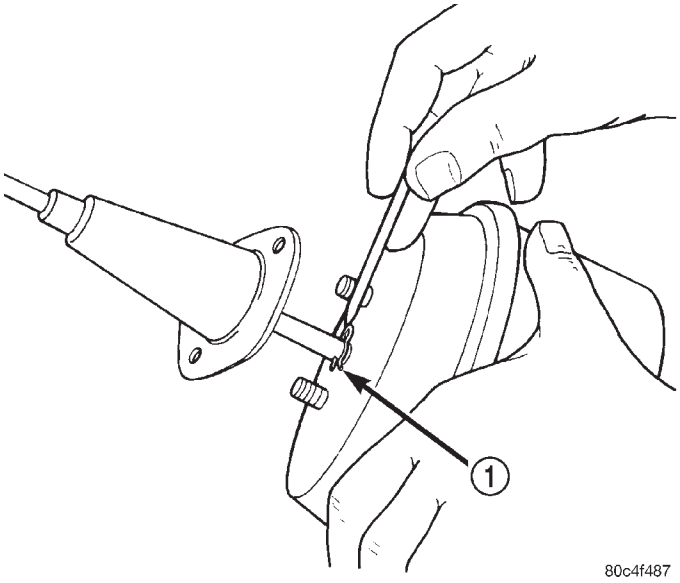

Fig. 9 Cable Clip

1 – HAIRPIN CLIP

REMOVAL AND INSTALLATION (Continued)

(8) Remove throttle cable clasp from the throttle body cam (Fig. 10).

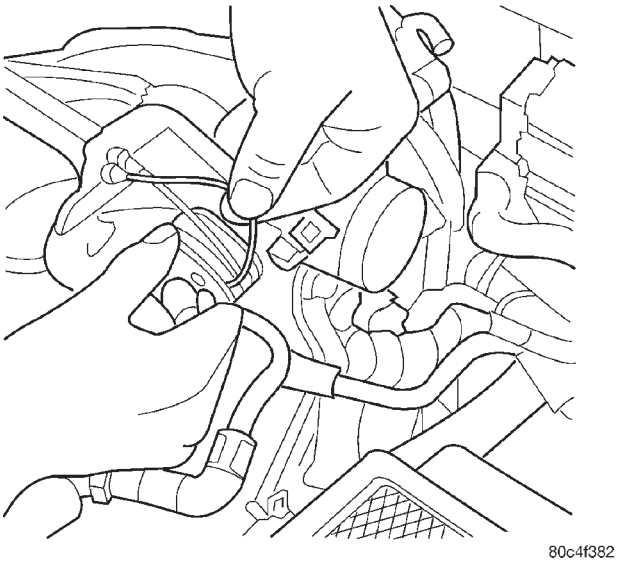

Fig. 10 Throttle Cable and Speed Control Cable

(9) Remove speed control cable from throttle cam by sliding clasp out hole used for throttle cable.

(10) Compress the retaining tabs on the cables and slide cables out of bracket (Fig. 11).

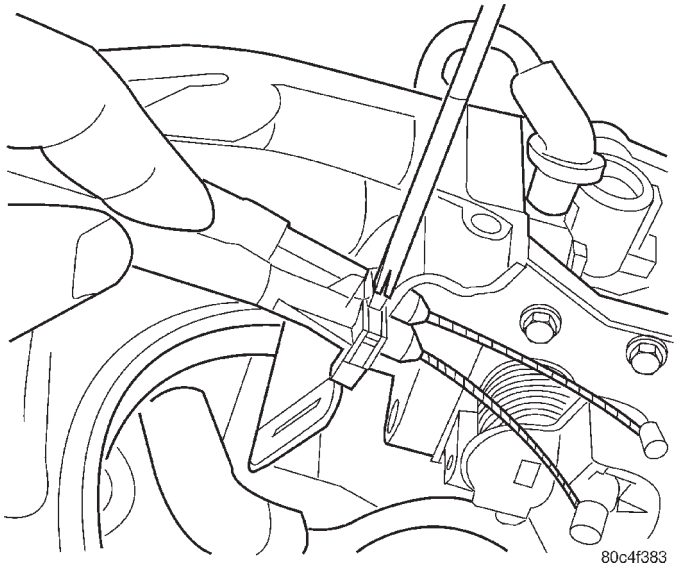

Fig. 11 Retaining Tabs

INSTALLATION

(1) Install cable core wire through center hole on bracket, onto servo center post.

(2) Install retaining clip to cable at servo (Fig. 9).

(3) Slide cable bell housing over servo mounting studs through the bracket.

(4) Install 2 nuts, tighten to 7 N·m (60 ins. lbs.).

(5) Slide cables into throttle cable bracket and engage retaining tabs (Fig. 10).

(6) Rotate the throttle cam forward to the wide open position and install speed control cable clasp (Fig. 10).

(7) Rotate the throttle cam forward to the wide open position and install throttle cable clasp.

(8) Install engine cover and throttle control shield, if equipped.

(9) Install the negative battery cable.

(10) Install the air cleaner lid, makeup air hose.

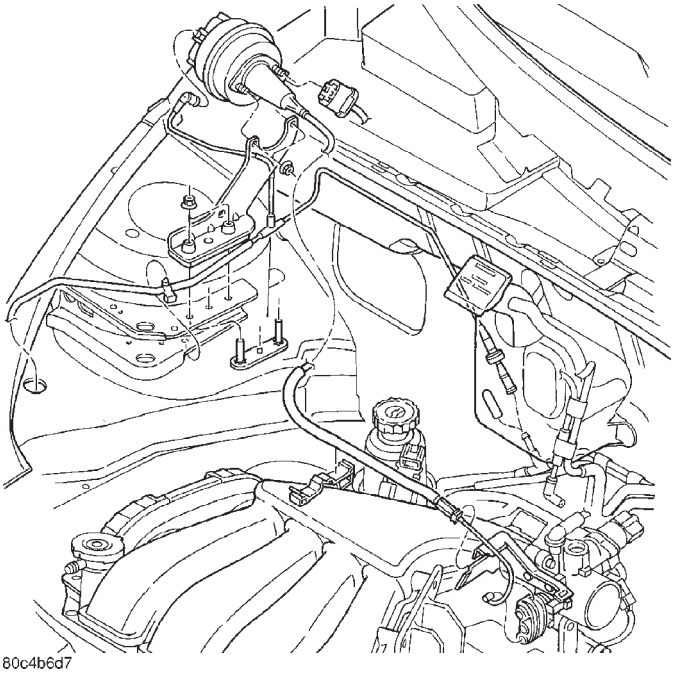

Fig. 12 Speed Control System

VACUUM RESERVOIR

The vacuum reservoir is located in the right front fender well on the frame rail (Fig. 14). It is made of plastic.

REMOVAL AND INSTALLATION (Continued)

REMOVAL

(1) Remove the air cleaner lid, disconnect the inlet air temperature sensor and makeup air hose.

(2) Remove the negative battery cable.

(3) Raise vehicle and support.

(4) Remove the right front wheel.

(5) Remove the front half of the inner splash shield and relocate rearward (Fig. 13).

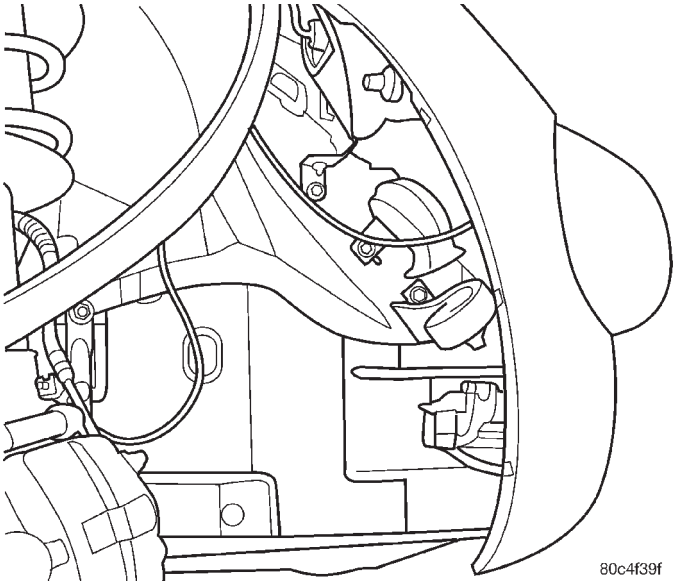

Fig. 13 Inner Splash Shield

(6) Remove the 2 screws from vacuum reservoir (Fig. 14).

(7) Disconnect vacuum hose from reservoir (Fig. 15).

INSTALLATION

(1) Connect hoses to reservoir.

(2) Install reservoir and tighten screws to 5 N·m (45 ins. lbs.) (Fig. 14).

(3) Install the inner splash shield (Fig. 13).

(4) Lower vehicle.

(5) Install the negative battery cable.

(6) Install the air cleaner lid, connect the inlet air temperature sensor and makeup air hose.

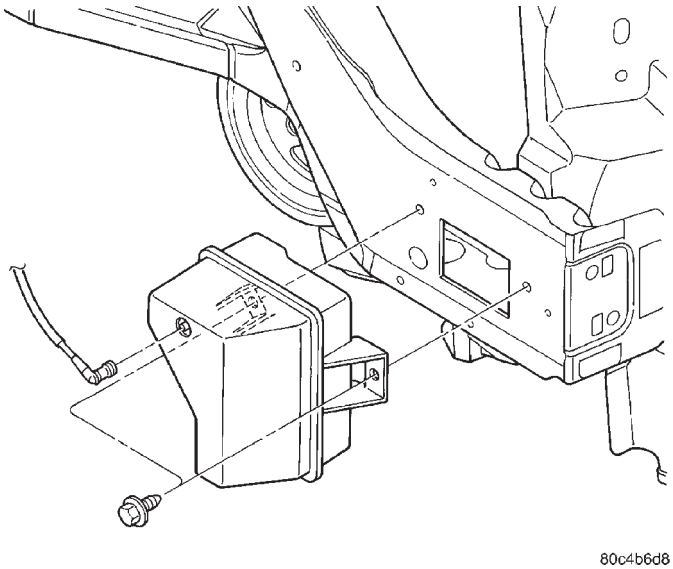

Fig. 14 Reservoir Mounting Screws

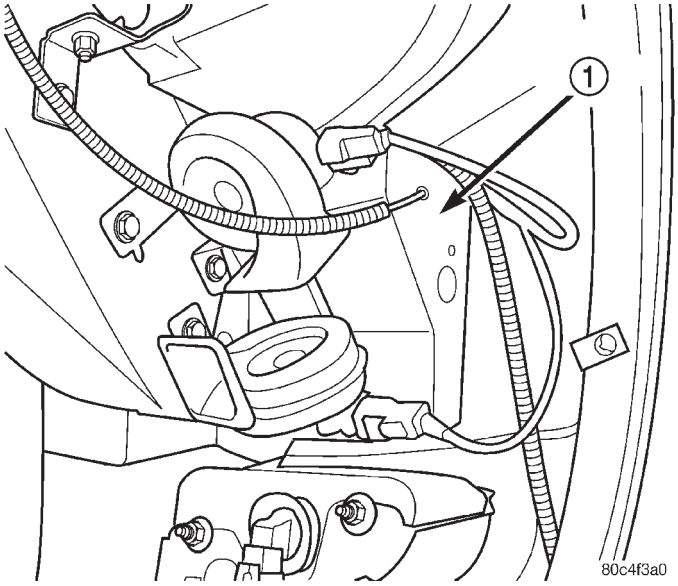

Fig. 15 Vacuum Reservoir

1 – VACUUM RESERVOIR

TURN SIGNAL AND HAZARD WARNING SYSTEMS

TABLE OF CONTENTS

	page
DESCRIPTION AND OPERATION	
TURN SIGNAL SYSTEM	1
HAZARD WARNING SYSTEM	2
HEADLAMP SWITCH	2
COMBINATION FLASHER	2
DIAGNOSIS AND TESTING	
MULTI-FUNCTION SWITCH	3
REMOVAL AND INSTALLATION	
COMBINATION FLASHER	6
MULTI-FUNCTION SWITCH	6

DESCRIPTION AND OPERATION

TURN SIGNAL SYSTEM

DESCRIPTION

The turn signals are part of the multi-function switch which contains (Fig. 1) :

- Electrical circuitry for turn signals
- Hazard warning switch
- Headlamp switch
- Fog Lamp Switch
- Headlamp beam select switch
- Optical Horn
- Instrument Panel Lamp Dimmer/Interior Lamp Switch
- Combination Flasher

The integrated turn signal switch assembly is mounted to the left hand side of the steering column.

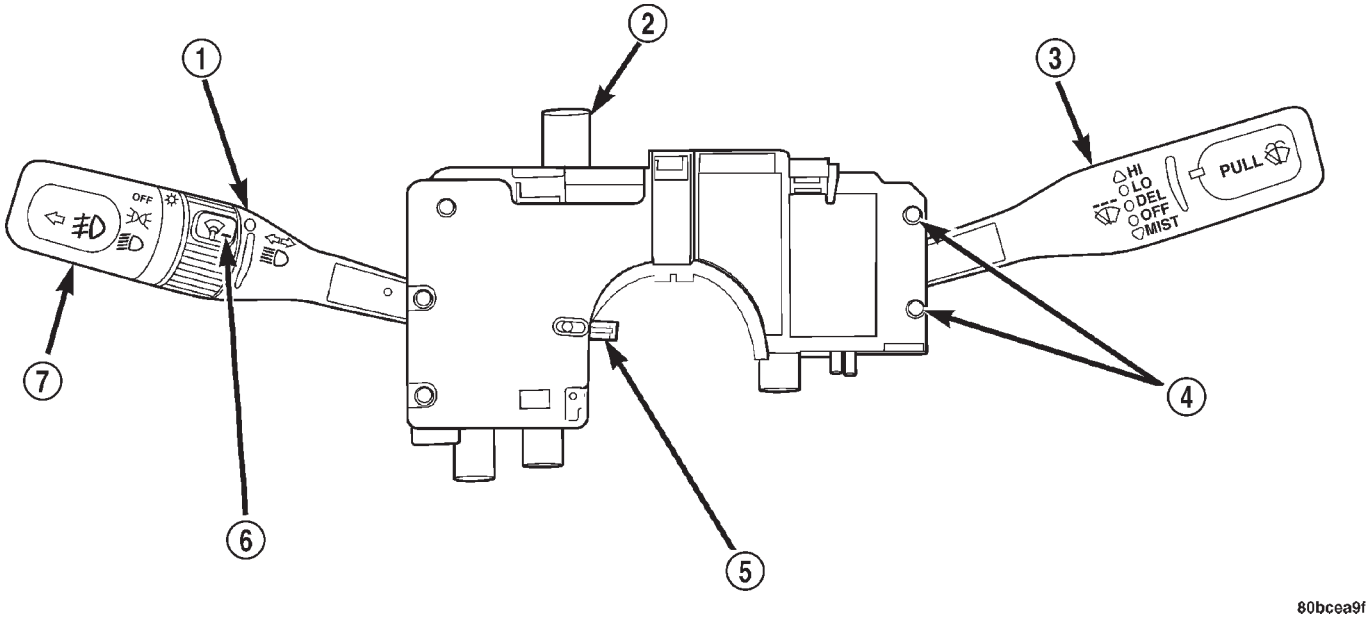

Fig. 1 Mutli-Function Switch

1 – TURN SIGNAL CONTROL STALK
2 – HAZARD WARNING SWITCH
3 – WINDSHIELD WIPER/WASHER CONTROL
4 – WINDSHIELD WIPER/WASHER SWITCH RETAINING SCREWS
5 – CANCELLING CAM
6 – PANEL DIMMER/INTERIOR LIGHT SWITCH
7 – EXTERIOR LIGHTING CONTROL/FOG LAMP

DESCRIPTION AND OPERATION (Continued)

OPERATION

When the driver wishes to signal his intentions to change direction of travel, he moves the lever upward to cause the right signals to flash and downward to cause the left signals to flash. After completion of a turn the system is deactivated automatically. As the steering wheel returns to the straight ahead position, a canceling cam molded to the clockspring mechanism comes in contact with the cancel actuator on the turn signal multi-function switch assembly. The cam lobe, pushing on the cancel actuator, returns the switch to the off position.

If only momentary signaling such as indication of a lane change is desired, the switch is actuated to a left or right intermediate detent position. In this position the signal lamps flash as described above, but the switch returns to the OFF position as soon as the lever is released.

When the system is activated, one of two indicator lamps mounted in the instrument cluster flashes in unison with the turn signal lamps, indicating to the driver that the system is operating.

HAZARD WARNING SYSTEM

DESCRIPTION

The hazard warning system is actuated by a push button located in the multi-function switch (Fig. 1) on the top of the steering column between the steering wheel and the instrument panel. The hazard switch is identified with a double triangle on front of the button.

The hazard warning system allows the vehicle operator to provide the drivers of other vehicles in near proximity an optical indication that the vehicle is disabled or is an obstacle to traffic flow. Unlike the turn signal system, the hazard warning system has battery current at all times, regardless of ignition switch position.

OPERATION

When the hazard warning system is activated, the combination flasher will cause both the right and left side turn signal indicator lamps, front park/turn signal lamps, front side marker lamps and rear turn signal lamps to flash on and off. If the exterior lamps are turned off, the front park/turn signal lamps and the front side marker lamps will flash in unison. If the exterior lamps are turned on, the front park/turn signal lamps and the side marker lamps will flash alternately.

HEADLAMP SWITCH

DESCRIPTION

The headlamp switch is integral to the left stalk of the multi-function switch (Fig. 1) located on the steering column behind the steering wheel. A knob on the end of the left control stalk controls all of the exterior lighting functions.

OPERATION

Turn the end of the control lever to the first detent for parking light operation. Turn to the second detent for headlight operation. To activate the front fog lights, turn ON the parking lights or the low beam headlights and pull out the end of the control lever.

The headlamp switch is part of the multi-function switch. Refer to Multi-Function Switch Diagnosis and Testing, Turn Signal and Hazard Warning Flasher Diagnosis table in this section. The headlamp switch cannot be repaired. If found defective, it must be replaced.

COMBINATION FLASHER

DESCRIPTION

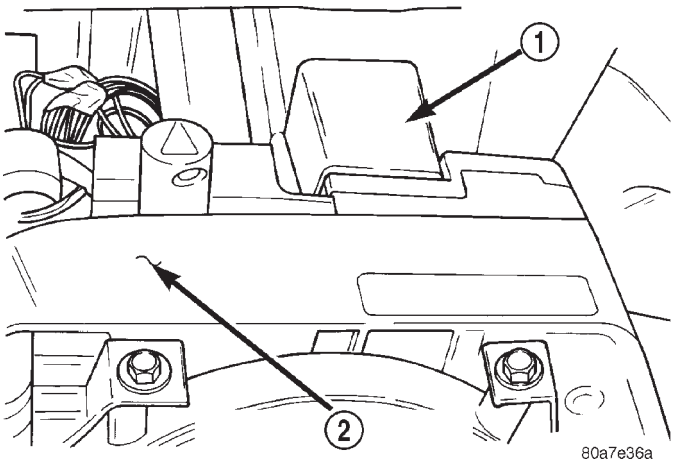

Fig. 2 Combination-Flasher

1 – COMBINATION FLASHER
2 – MULTI-FUNCTION SWITCH

The turn signal flasher and the hazard warning flasher are combined into one unit called a Combination Flasher (combo-flasher). The combo-flasher is a smart relay located on the back of the multi-function switch. The combo-flasher is black in color and has a dampener material wrapped on it. Constant battery voltage is supplied to the flasher so that it can perform the hazard warning function, and ignition switched battery voltage is supplied for the turn signal function. However, when the flasher is idle no current is drawn through the module. The unit does

DESCRIPTION AND OPERATION (Continued)

not become active until it is provided a signal ground from the turn signal switch or hazard warning switch.

OPERATION

The combo-flasher controls the flashing of the hazard warning system and the turn signal system. An inoperative bulb or incomplete turn signal circuit will cause the flasher rate to double. Typical flash rate is about ninety flashes per minute. When a bulb is burnt out, or when a circuit for a lamp is open, the turn signal flash rate will increase to a minimum of 180 flashes per minute. However, an open lamp circuit or burnt out bulb does not change the hazard warning flash rate.

Turn signal inputs that actuate the combination flasher are low current grounds, each drawing a maximum of 300 milliamperes. The turn signal inputs are provided to the flasher through the multi-function switch on the steering column. The hazard warning signal input is a low current ground drawing a maximum of 600 milliamperes. The hazard warning input can be provided through the multi-function switch on the steering column.

DIAGNOSIS AND TESTING

MULTI-FUNCTION SWITCH

FLASHER DIAGNOSIS

Should any function of the multi-function switch fail, the entire switch assembly must be replaced. Refer to Multi-Function Switch Removal and Installation in this section.

TURN SIGNAL AND HAZARD WARNING FLASHER DIAGNOSIS

CONDITION	POSSIBLE CAUSES	CORRECTION
TURN SIGNAL FLASHES AT TWICE THE NORMAL RATE.	(1) FAULTY EXTERNAL LAMP. (2) POOR GROUND AT LAMP. (3) OPEN CIRCUIT IN WIRING TO EXTERNAL LAMP. (4) FAULTY CONTACT IN SWITCH.	(1) REPLACE LAMP. (2) CHECK AND/OR REPAIR WIRING (3) REPAIR WIRING HARNESS. CHECK CONNECTORS. (4) REPLACE MULTI FUNCTION SWITCH.
INDICATOR LAMP ILLUMINATED BRIGHTLY, EXTERNAL LAMP GLOWS DIMLY AT A RAPID RATE.	(1) LOOSE OR CORRODED EXTERNAL LAMP CONNECTION. (2) POOR GROUND CIRCUIT AT EXTERNAL LAMP. (3) OPEN INSTRUMENT CLUSTER.	(1) REPLACE SOCKET CONNECTION. (2) REPAIR WIRING HARNESS. CHECK CONNECTORS. (3) REPLACE INSTRUMENT CLUSTER.
HAZARD WARNING SYSTEM DOES NOT FLASH.	(1) FAULTY FUSE. (2) FAULTY FLASHER. (3) OPEN CIRCUIT IN FEED WIRE TO SWITCH. (4) FAULTY CONTACT IN SWITCH. (5) OPEN OR GROUNDED CIRCUIT IN WIRING TO EXTERNAL LAMPS.	(1) REPLACE FUSE. (2) REPLACE FLASHER. (3) REPAIR WIRING HARNESS, CHECK CONNECTORS. (4) REPLACE MULTI FUNCTION SWITCH. (5) REPAIR WIRING HARNESS.
INDICATOR LAMP ILLUMINATES BRIGHTLY, EXTERNAL LAMP DOES NOT LIGHT.	(1) OPEN CIRCUIT IN WIRE TO EXTERNAL LAMP. (2) BURNED OUT LAMP.	(1) REPAIR WIRING HARNESS. (2) REPLACE LAMP.

DIAGNOSIS AND TESTING (Continued)

CONDITION	POSSIBLE CAUSES	CORRECTION
SYSTEM DOES NOT FLASH ON EITHER SIDE.	(1) FAULTY FUSE. (2) FAULTY FLASHER UNIT. (3) LOOSE BULKHEAD CONNECTOR. (4) LOOSE OR FAULTY REAR WIRING HARNESS OR TERMINALS. (5) OPEN CIRCUIT TO FLASHER UNIT. (6) OPEN CIRCUIT IN FEED WIRE TO TURN SIGNAL SWITCH. (7) FAULTY SWITCH CONNECTION IN SWITCH. (8) OPEN OR GROUNDED CIRCUIT IN WIRING TO EXTERNAL LAMPS.	(1) REPLACE FUSE. (2) REPLACE FLASHER. (3) TIGHTEN CONNECTOR. (4) REPAIR WIRING HARNESS (5) CHECK CONNECTORS, REPAIR WIRING HARNESS. (6) CHECK CONNECTORS, REPAIR WIRING HARNESS. (7) REPLACE MULTI FUNCTION SWITCH. (8) REPAIR WIRING HARNESS.
SYSTEM DOES NOT CANCEL AFTER COMPLETION OF THE TURN.	(1) BROKEN CANCELLING FINGER ON SWITCH. (2) BROKEN OR MISSING CANCELLING CAM ON CLOCKSPRING.	(1) REPLACE MULTI FUNCTION SWITCH. (2) REPLACE CLOCKSPRING.
EXTERNAL LAMPS OPERATE PROPERLY, NO INDICATOR LAMP OPERATION.	(1) FAULTY INDICATOR LAMP IN INSTRUMENT CLUSTER. (2) OPEN CIRCUIT OR WIRING.	(1) REPLACE LAMP. (2) REPAIR WIRING HARNESS.

SWITCH DIAGNOSIS

To test the switch:

(1) Disconnect and isolate the battery negative cable (Fig. 3).

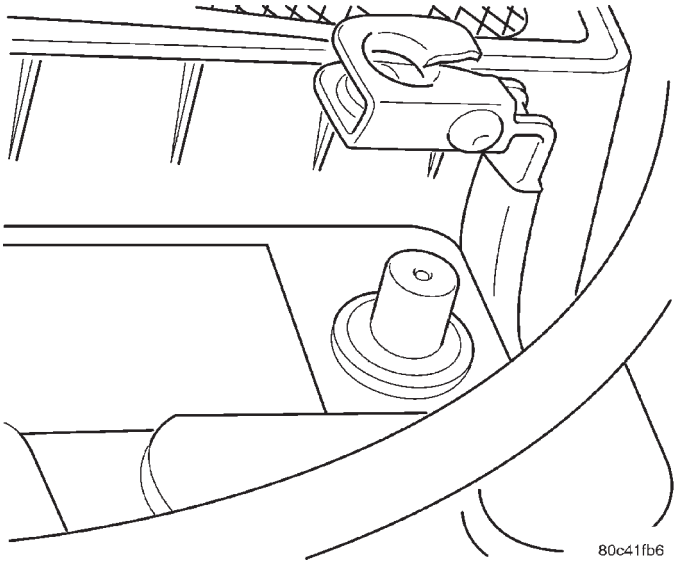

Fig. 3 Battery Negative Cable Remove/Install

(2) Remove the upper and lower steering column shrouds. Refer to Instrument Panel Systems, Removal and Installation, Steering Column Shrouds.

(3) Disconnect the switch connector.

Using an ohmmeter, test for continuity (no resistance) between the terminals of the switch as shown in the Multi-Function Switch Continuity Test table for diagnosis. Refer to (Fig. 4), (Fig. 5), and (Fig. 6) for connector terminal locations.

DIAGNOSIS AND TESTING (Continued)

MULTI-FUNCTION SWITCH CONTINUITY TEST

SWITCH POSITION	MODE	CONTINUITY BETWEEN
TURN SIGNAL IN NEUTRAL HAZARD WARNING SWITCH OFF	NEUTRAL	B-1 AND B-4 B-1 AND B-5
TURN SIGNAL ON HAZARD WARNING SWITCH OFF	LEFT TURN	A-2 AND B-2 A-2 AND B-4 B-1 AND B-5
	RIGHT TURN	A-2 AND B-5 A-2 AND B-6 B-1 AND B-4
TURN SIGNAL IN NEUTRAL HAZARD WARNING SWITCH ON	NEUTRAL	A-2 AND B-2 A-2 AND B-4 A-2 AND B-5 A-2 AND B-6 A-3 AND A-5 A-3 AND B-7
HEADLAMP BEAM ON	PARK	B-9 AND B-20
	LOW	B-16 AND B-18 B-16 AND B-19
	HIGH	B-17 AND B-18 B-17 AND B-19
OPTICAL HORN	ON	B-17 AND B-18 B-17 AND B-19
FRONT FOG	ON	B-13 AND B-14
WIPER	OFF	PIN C-1 AND C-6
	LOW/MIST	PIN C-4 AND C-6
	HIGH	PIN C-4 AND C-5
	WASH	PIN C-4 AND C-3
	INTERMITTENT	CANNOT BE CHECKED

MULTI-FUNCTION SWITCH DIMMER CONTROL RESISTANCE

SWITCH POSITION	RESISTANCE VALUE
DOME ALL	150 Ω
PARADE MODE	412 Ω
DIM 6 (BRIGHTEST INTENSITY)	768 Ω
DIM 5	1221 Ω
DIM 4	1825 Ω
DIM 3	2593 Ω
DIM 2	3743 Ω
DIM 1 (DIMMEST INTENSITY)	5653 Ω
OFF	8813 Ω

DIAGNOSIS AND TESTING (Continued)

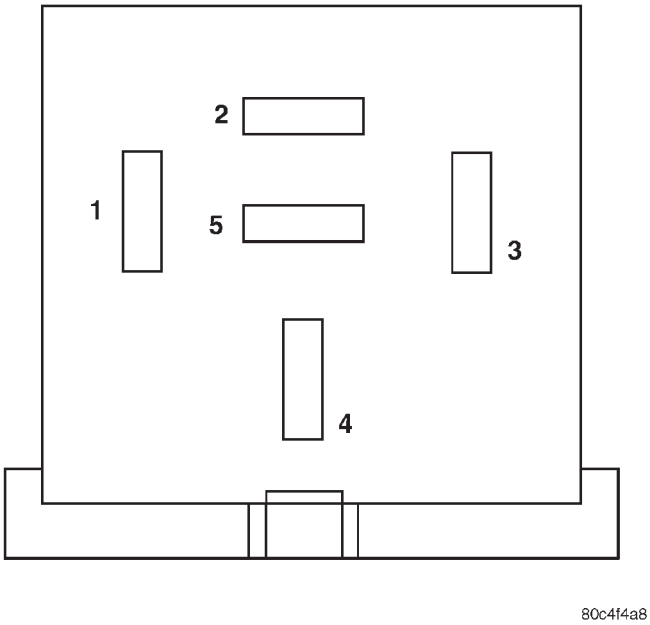

Fig. 4 Combination Flasher Connector (A)

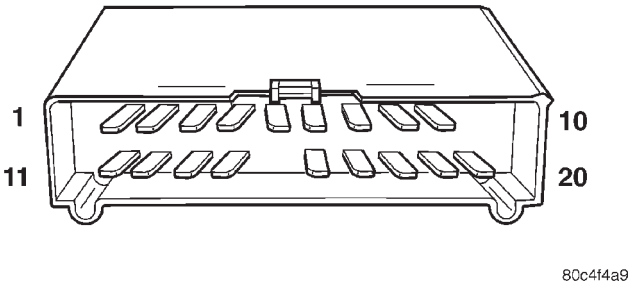

Fig. 5 Multi-Function Switch Connector (B)

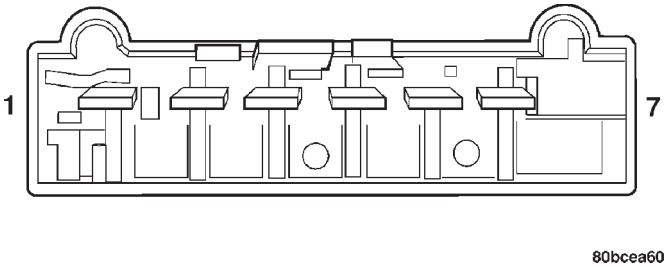

Fig. 6 Windshield Wiper/Washer Switch Connector (C)

REMOVAL AND INSTALLATION

COMBINATION FLASHER

The flasher is mounted to the back side of the multi-function switch (Fig. 2). The flasher is serviced separately from the multi-function switch.

REMOVAL

(1) Open hood.

(2) Disconnect and isolate the battery negative cable (Fig. 3).

(3) Remove the upper steering column shroud. Refer to Instrument Panel Systems, Steering Column Shroud Removal and Installation.

(4) The flasher can be removed by pulling it toward the instrument cluster (forward) (Fig. 7).

INSTALLATION

(1) Align the combo-flasher tabs and push into place (Fig. 7).

(2) Install the upper steering column shroud. Refer to Instrument Panel Systems, Steering Column Shroud Removal and Installation.

(3) Connect the battery negative cable (Fig. 3).

(4) Close hood.

(5) Verify vehicle and system operation.

MULTI-FUNCTION SWITCH

REMOVAL

(1) Open hood.

(2) Disconnect and isolate the battery negative cable (Fig. 3).

(3) Remove both upper and lower steering column shrouds. Refer to Instrument Panel Systems, Steering Column Shroud Removal and Installation.

(4) Disconnect both posi-lock harness connectors at the rear of the multi-function switch (Fig. 7)

(5) Remove multi-function switch mounting screws (Fig. 7) and remove switch from vehicle.

REMOVAL AND INSTALLATION (Continued)

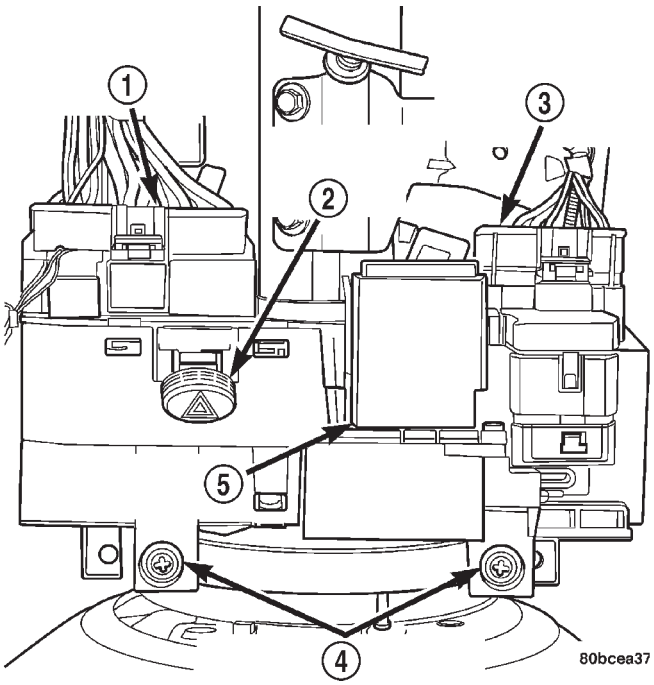

Fig. 7 Multi-Function Switch Remove/Install

1 – MULTI-FUNCTION SWITCH CONNECTOR
2 – HAZARD/WARNING SWITCH
3 – WINDSHIELD WIPER/WASHER SWITCH CONNECTOR
4 – MOUNTING SCREWS
5 – COMBINATION FLASHER

INSTALLATION

NOTE:

- **If replacing the multi-function switch, the combination flasher must be transferred to new switch.**
- **If replacing the multi-function switch, the windshield wiper/washer switch must be transferred to the new switch.**
- **Remove the two torx screws retaining the wiper/washer switch, place next to the new multi-function switch and install two screws.**

(1) Place switch into place and install mounting screws (Fig. 7). Torque multi-function switch to column retaining screws to 3 N·m (27 in. lbs.).

(2) Connect both posi-lock harness connectors at the rear of the multi-function switch (Fig. 7)

(3) Install both upper and lower steering column shrouds. Refer to Instrument Panel Systems, Steering Column Shroud Removal and Installation.

(4) Connect the battery negative cable (Fig. 3).

(5) Close hood.

(6) Verify vehicle and system operation.

TURN SIGNAL and HAZARD WARNING SYSTEMS

TABLE OF CONTENTS

page

DESCRIPTION AND OPERATION
REAR FOG LAMP SWITCH. 1
DIAGNOSIS AND TESTING
MULTI-FUNCTION with REAR FOG SWITCH 2

page

REMOVAL AND INSTALLATION
REAR FOG LAMP SWITCH. 3

DESCRIPTION AND OPERATION

REAR FOG LAMP SWITCH

DESCRIPTION

The rear fog lamp switch (Fig. 1) is incorporated into the multi-function switch. Some vehicles are equipped with a single rear fog lamp, some vehicles are equipped with dual rear fog lamps. The vehicle market (Asia, Europe, etc.) determines the position and number of rear fog lamps.

OPERATION

The multi-function switch contains the added circuitry for the operation of the rear fog lamp switch. Refer to the Owners Manual for switch operation instructions. Refer to Wiring Diagrams for complete rear fog lamp circuit diagram.

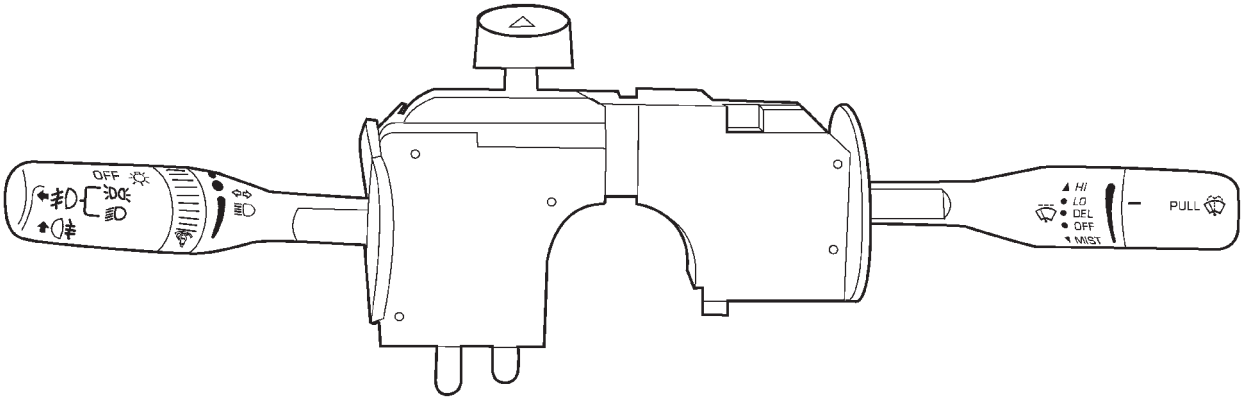

80c06ee1

Fig. 1 Multi-Function Switch with Rear Fog Lamp Option

DIAGNOSIS AND TESTING

MULTI-FUNCTION with REAR FOG SWITCH

FLASHER DIAGNOSIS

Should any function of the multi-function switch fail, the entire switch assembly must be replaced. Refer to Multi-Function Switch Removal and Installation in this section.

SWITCH DIAGNOSIS

To test the switch:

(1) Disconnect and isolate the battery negative cable (Fig. 2).

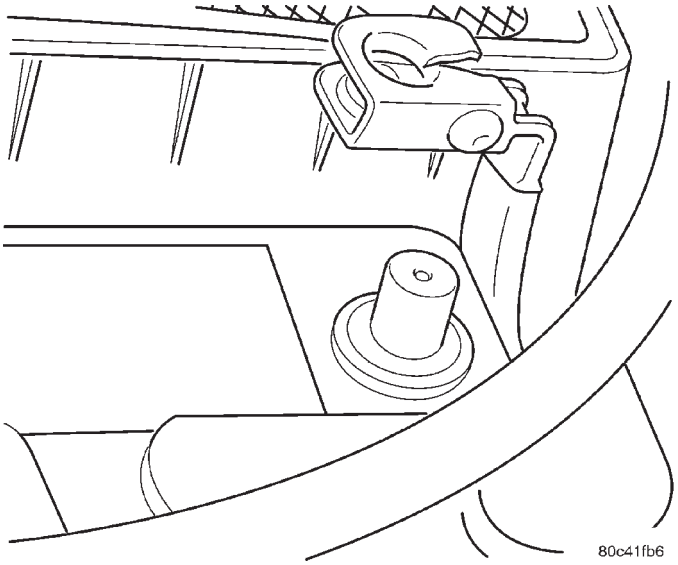

Fig. 2 Battery Negative Cable Remove/Install

(2) Remove the upper and lower steering column shrouds. Refer to Instrument Panel Systems, Removal and Installation, Steering Column Shrouds.

(3) Disconnect the switch connector.

Using an ohmmeter, test for continuity (no resistance) between the terminals of the switch as shown in the Multi-Function Switch Continuity Test table for diagnosis. Refer to (Fig. 3) for connector terminal locations.

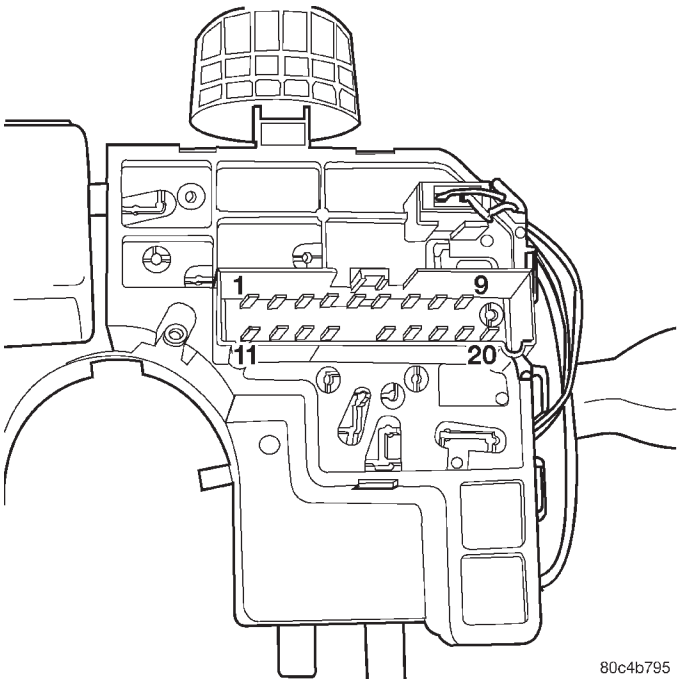

Fig. 3 BUX Multi-Function Switch Connector

DIAGNOSIS AND TESTING (Continued)

MULTI-FUNCTION SWITCH CONTINUITY TEST

SWITCH POSITION	MODE	CONTINUITY BETWEEN
TURN SIGNAL IN NEUTRAL HAZARD WARNING SWITCH OFF	NOTHING ON	1,4,5 AND 18,19
TURN SIGNAL ON HAZARD WARNING SWITCH OFF	LEFT TURN	1,5 AND 2,4 AND 18,19
	RIGHT TURN	1,4 AND 5,6 AND 18,19
TURN SIGNAL IN NEUTRAL HAZARD WARNING SWITCH ON	HAZARD ON	2,4,5,6 AND 18,19
PARKLAMP ON	PARK	1,4,5 AND 9,20 AND 18,19
HEADLAMP BEAM ON	LOW	1,4,5 AND 9,20 AND 16,18,19
	HIGH	1,4,5 AND 9,20 AND 17,18,19
OPTICAL HORN	ON	17,18,19
FRONT FOG	ON	1,4,5 AND 9,20 AND 13,14 AND 16,18,19
REAR FOG	ON	1,4,5 AND 9,20 AND 12,13,14 AND 16,18,19
INSTRUMENT PANEL DIMMER DETENT	6 BRIGHTEST	7 AND 8 768 OHMS
	5	7 AND 8 1221 OHMS
	4	7 AND 8 1825 OHMS
	3	7 AND 8 2593 OHMS
	2	7 AND 8 3743 OHMS
	1	7 AND 8 5653 OHMS
	OFF	7 AND 8 8813 OHMS
	PARADE	7 AND 8 412 OHMS
	DOME ON	7 AND 8 150 OHMS

REMOVAL AND INSTALLATION

REAR FOG LAMP SWITCH

The rear fog lamp switch is incorporated into the multi-function switch. Refer to Turn Signal and Hazzard Warning Systems - Multi-Function Switch Removal and Installation procedure for detailed instructions.

2001 PT CRUISER

WIPER AND WASHER SYSTEMS

TABLE OF CONTENTS

page

FRONT WINDSHIELD WIPER/WASHER SYSTEM 1

page

REAR WINDSHIELD WIPER/WASHER SYSTEM 15

FRONT WINDSHIELD WIPER/WASHER SYSTEM

TABLE OF CONTENTS

page

DESCRIPTION AND OPERATION
FRONT WINDSHIELD WIPER SYSTEM 1
FRONT WIPER BLADES 2
FRONT WINDSHIELD WASHER SYSTEM 2
FRONT WINDSHIELD WASHER NOZZLE(S) 3
DIAGNOSIS AND TESTING
FRONT WINDSHIELD WIPER DIAGNOSIS. 3
FRONT WINDSHIELD WIPER MOTOR. 5
WINDSHIELD WIPER/WASHER SWITCH 6
FRONT AND REAR WINDSHIELD WASHER SYSTEM 6
REMOVAL AND INSTALLATION
FRONT WINDSHIELD WIPER ARM 7
FRONT WINDSHIELD WIPER BLADE 7

page

FRONT WINDSHIELD WIPER BLADE ELEMENT 8
FRONT WINDSHIELD WIPER MODULE. 8
FRONT WINDSHIELD WIPER MOTOR. 9
FRONT WINDSHIELD WIPER/WASHER SWITCH 10
FRONT WINDSHIELD WASHER NOZZLE. 10
WINDSHIELD WASHER HOSE 11
WINDSHIELD WASHER PUMP. 11
WINDSHIELD WASHER RESERVOIR. 13
CLEANING AND INSPECTION
WINDSHIELD WIPER BLADE(S). 13
ADJUSTMENTS
FRONT WINDSHIELD WIPER ARM(S) 13

DESCRIPTION AND OPERATION

FRONT WINDSHIELD WIPER SYSTEM

DESCRIPTION

The front windshield wiper/washer switch is mounted on the right side of the multi-function switch on the steering column, behind the steering wheel.

The wiper system has LOW, HIGH, and INTERMITTENT switch positions. The intermittent wiper system, in addition to low and high speed, has a delay mode and a pulse wipe mode.

The intermittent wiper function is integral to the wiper switch. All electronics and relay are inside the switch assembly. The wiper switch also includes the MIST feature which provides a single wipe when actuated.

OPERATION

Move the control lever up to select the desired wiper speed. Move the lever upward to the second detent for Low speed wiper operation, or to the third detent for High speed operation.

Use the intermittent wiper when weather conditions make a single wiping cycle, with a variable pause between cycles, desirable. Move the lever to the DEL position, then select the delay interval by turning the end of the lever. The delay can be regulated from a maximum of approximately 18 ± 0.5 seconds between cycles, to a cycle every second ± 0.5 second.

The windshield wipers will only operate with the ignition switch in the ACCESSORY or IGNITION RUN position. The wiper circuit is protected against over loads by a fuse in the fuse block and a circuit breaker within the wiper motor. This protects the circuitry of the wiper system and the vehicle. The wiper motor has permanent magnet fields.

DESCRIPTION AND OPERATION (Continued)

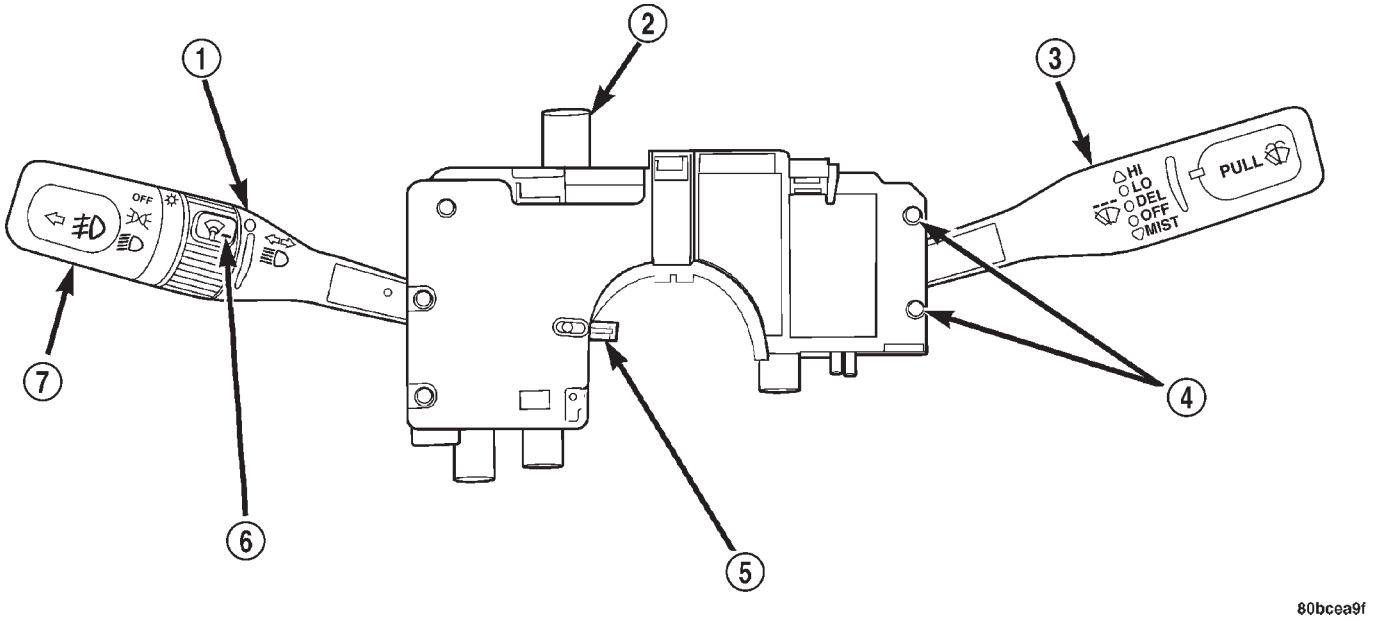

Fig. 1 Windshield Wiper/Washer Switch Location

1 – TURN SIGNAL CONTROL STALK
2 – HAZARD WARNING SWITCH
3 – WINDSHIELD WIPER/WASHER CONTROL
4 – WINDSHIELD WIPER/WASHER SWITCH RETAINING SCREWS
5 – CANCELLING CAM
6 – PANEL DIMMER/INTERIOR LIGHT SWITCH
7 – EXTERIOR LIGHTING CONTROL/FOG LAMP

The intermittent wiper delay mode has a range of 1 ± 0.5 to 18 ± 0.5 seconds. Pulse wipe is accomplished by holding stalk lever in the WASH position momentarily. The wiper blades then sweep once or twice after the WASH at low speed and then return to the previous wiper switch mode.

The wiper system completes the wipe cycle when the switch is turned OFF. The blades park in the lowest portion of the wipe pattern.

Push down on the wiper lever to activate a single wipe to clear off road mist or spray from a passing vehicle. As long as the lever is held down, the wipers will continue to operate.

FRONT WIPER BLADES

DESCRIPTION

The wiper blades are a rubber element with a steel vertebra that are mounted on the end of the windshield wiper arm and sweep across the front windshield to clear it of water, snow, and debris.

OPERATION

When the wiper blade rubber element is exposed to the weather for a long period of time, it tends to lose wiping ability. Periodic cleaning of the wiper blade element is suggested to remove the accumulation of salt and road film. The wiper blades, arms, and windshield should be cleaned with a sponge or cloth and a mild detergent or non-abrasive cleaner. If the blades continue to streak or smear, they should be replaced. The driver blade element is 500 mm in length and the passenger blade element is 525 mm in length.

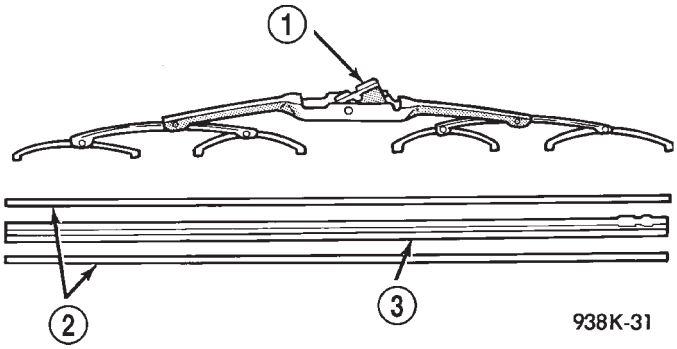

Fig. 2 Front Windshield Wiper Blade and Element

1 – ARM RELEASE TAB
2 – VERTEBRA
3 – RUBBER ELEMENT

FRONT WINDSHIELD WASHER SYSTEM

DESCRIPTION

This vehicle is equipped with an electrically operated windshield washer pump. The washers are operated by a switch in the multi-function switch control

DESCRIPTION AND OPERATION (Continued)

lever (Fig. 1). The lever is located on the right side of the steering column.

The electric pump assembly is mounted directly to the reservoir. A permanently lubricated motor is coupled to an impeller type pump. The pump and reservoir are serviced as separate assemblies.

OPERATION

To use the washer, pull the stalk lever toward you and hold while spray is desired. If the stalk lever is pulled while in the delay range, the wiper will operate for two wipe cycles (± 1) after the stalk lever is released, and then resume the intermittent interval previously selected.

The wash function can be accessed in the OFF position of the wiper control switch. Pulling the washer stalk lever rearward when the switch is in the OFF position will operate the wipers and washer motor pump continuously until the stalk lever is released. Releasing the stalk lever will stop the washer pump but the wipers will complete the current wipe cycle followed by an average of two more wipe cycles (± 1) before the wipers park and the module turns off.

If the stalk lever is pulled while in the OFF position, the wipers will operate for two wipe cycles, then turn OFF.

Fluid, gravity fed from the reservoir, is forced by the pump through rubber hoses to the hood mounted nozzles which direct the fluid streams to the windshield.

FRONT WINDSHIELD WASHER NOZZLE(S)

DESCRIPTION

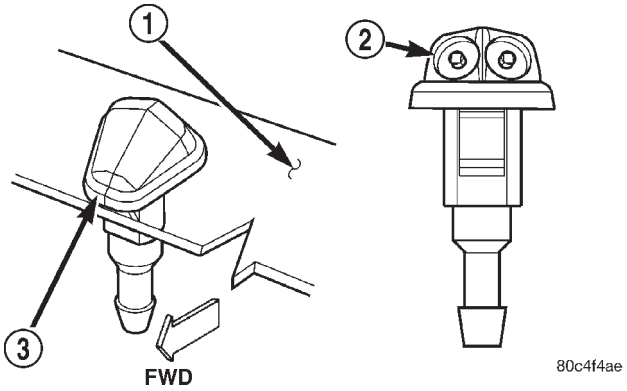

Fig. 3 Windshield Washer Nozzle

1 – HOOD
2 – ADJUST WITH A PIN
3 – NOZZLE

There are two hood mounted washer nozzles. The right and left nozzles are identical.

OPERATION

Each nozzle emits two streams into the wiper pattern (Fig. 4). If the nozzle performance is unsatisfactory they can be adjusted.

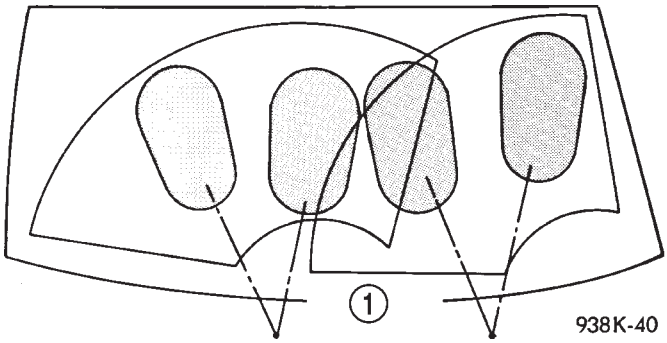

Fig. 4 Windshield Washer Pattern - Typical

1 – NOZZLE AIR TARGET

To adjust front washer nozzle(s):

• Insert a pin into the nozzle ball and move so that it sprays into the proper pattern area.

NOTE: Aim the spray towards the top of the pattern area. When proceeding down the road at speed, the spray will hit the windshield lower than when the vehicle is at rest.

DIAGNOSIS AND TESTING

FRONT WINDSHIELD WIPER DIAGNOSIS

The following is a list of general wiper motor system problems, the tests that are to be performed to locate the faulty part, and the corrective action to be taken.

Whatever the problem, disconnect motor wire harness and clean the terminals, then connect motor wire harness and test.

Refer to Wiring Diagrams for circuit information and connector call-outs.

MOTOR WILL NOT OPERATE IN SOME OR ALL SWITCH POSITIONS

(1) Check wiper fuse in the fuse block.

(a) If fuse is OK, go to Step 2.

(b) If fuse is defective, replace and check motor operation in all switch positions.

(c) If motor is still inoperative and the fuse does not blow, go to Step 2.

(d) If replacement fuse blows, go to Step 6.

(2) Disconnect motor harness connector.

(3) Check motor low speed. Using two jumper wires, connect one jumper wire between the battery positive terminal and terminal 4 of the motor connec-

DIAGNOSIS AND TESTING (Continued)

tor. Connect the other jumper wire to the battery negative terminal and terminal 1 (Fig. 5). Check motor high speed, connect the positive jumper wire to terminal 5 of the motor connector. Connect the negative jumper wire to terminal 1.

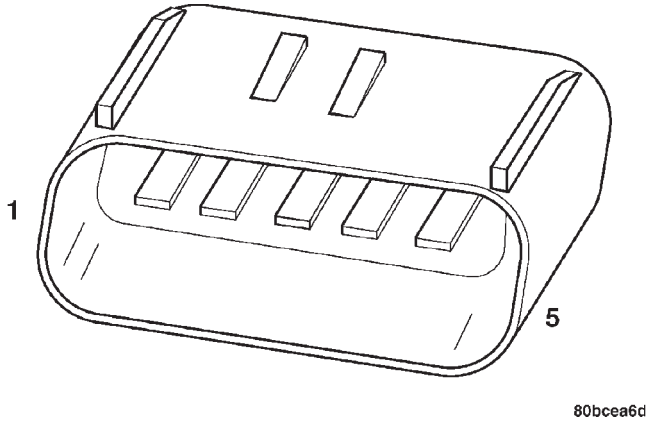

Fig. 5 Windshield Wiper Motor Connector

(a) If motor does not run in high or low speed go to Step 4.

(b) If motor does run, go to Step 5.

(4) Using an ohmmeter, check for good ground for the motor. If OK, replace motor. If not repair the ground circuit as necessary.

(5) Check terminal 2 of wiper switch connector for continuity to ground. If OK, go to Step 6. If not OK, repair the ground circuit as necessary.

(6) Using a voltmeter, with wiper switch connected, connect negative lead to terminal 1. Connect the positive lead to terminal 4 of the wiper switch connector (Fig. 6).

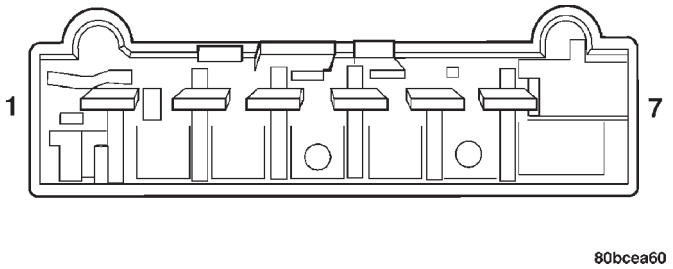

Fig. 6 Windshield Wiper Switch Connector

(a) If no voltage, repair wiring as necessary. If OK, go to Step b.

(b) Check wiper switch low speed. Connect voltmeter positive lead to terminal 6 of the wiper switch connector. Move wiper stalk to LOW position. If no voltage, replace switch.

(c) Check wiper switch high speed, connect voltmeter positive lead to terminal 5 of the wiper switch connector. Move wiper stalk to HIGH position. If no voltage, replace switch.

(7) Disconnect motor connector and replace wiper fuse in fuse block.

(a) If fuse does not blow, replace motor.

(b) If fuse blows, disconnect wiper switch and replace fuse.

(c) If fuse does not blow, replace switch.

(d) If fuse blows, repair wiring as necessary.

MOTOR OPERATES SLOWLY AT ALL SPEEDS

(1) Remove wiper arms and cowl screen. Disconnect motor linkage from motor. Connect an ammeter between battery positive terminal and terminal 4 of the motor connector. Turn wiper motor on and check ampere reading.

If motor runs and ammeter reading is more than 6 amps, go to Step 2. If less than 6 amps, go to Step 3.

(2) Using an ohmmeter, check the high and low circuits for a short to ground. Refer to Wiring Diagrams.

(3) Check to see if wiper linkage or pivots are binding or caught.

WIPERS RUN AT HIGH SPEED WITH SWITCH IN LOW SPEED POSITION OR WIPERS RUN AT LOW SPEED WITH SWITCH IN HIGH SPEED POSITION.

(1) Check for crossed wires in harness connector from wiper switch to motor.

(2) If OK, replace wiper switch.

WIPERS WILL OPERATE CONTINUOUSLY WITH THE SWITCH IN THE INTERMITTENT POSITION - WHEN WIPER SWITCH IS TURNED OFF, WIPERS STOP WHEREVER THEY ARE WITHOUT RETURNING TO PARK POSITION.

(1) Check at motor terminal 1 for a good ground.

(2) Turn ignition switch OFF. Disconnect the wiper switch harness connector. Using an ohmmeter with the motor in the park position, check for continuity between terminal 2 of the wiper switch harness connector (Fig. 7) and terminal 1 of the motor harness connector. If continuity, replace wiper switch. If no continuity, repair wiring as necessary.

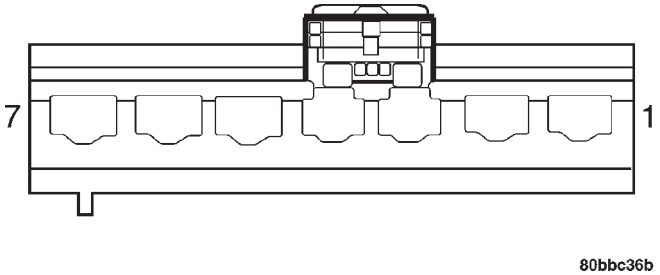

Fig. 7 Windshield Wiper Switch Harness Connector

DIAGNOSIS AND TESTING (Continued)

WIPERS DO NOT OPERATE WHEN WASHER MOTOR IS ENGAGED (PULSE WIPE) OR WIPERS DO OPERATE IN INTERMITTENT POSITION.

Check for a good ground at terminal 1 and at wiper switch terminal 2. If OK, replace wiper switch. If not OK, repair wiring as necessary.

FRONT WINDSHIELD WIPER MOTOR

Whenever a wiper motor malfunction occurs, verify that the wire harness is properly connected, then start normal diagnosis and repair procedures. Refer to Wiper Motor Test table.

WIPER MOTOR TEST

CONDITION	POSSIBLE CAUSES	CORRECTION
WIPER BLADES DO NOT PARK PROPERLY.	(1) WIPER ARMS IMPROPERLY PARKED. (2) WIPER ARMS ARE LOOSE ON PIVOT SHAFT. (3) MOTOR CRANK LOOSE AT OUTPUT SHAFT.	(1) REMOVE WIPER ARMS AND REPARK. REFER TO WIPER ARM REMOVAL AND INSTALLATION. (2) REMOVE WIPER ARM AND REPARK. REFER TO WIPER ARM REMOVAL AND INSTALLATION. (3) REMOVE WIPER ARM, RUN WIPER MOTOR TO PARK POSITION AND REMOVE THE MODULE. WITHOUT ROTATING THE MOTOR OUTPUT SHAFT, REMOVE THE CRANK AND CLEAN ANY FOREIGN MATTER FROM THE MOTOR SHAFT. INSTALL THE MOTOR CRANK IN ITS ORIGINAL POSITION.
MOTOR STOPS IN ANY POSITION WHEN THE SWITCH IS TURNED OFF.	(1) OPEN PARK CIRCUIT.	(1) CHECK PARK SWITCH BY DISCONNECTING THE WIRE CONNECTOR AND APPLY BATTERY VOLTAGE TO PIN 3. PLACE A JUMPER WIRE FROM PIN 2 TO PIN 4 AND THEN TO AN EXTERNAL GROUND TO PIN 1. REPLACE MOTOR IF IT DOES NOT PARK.
MOTOR WILL NOT STOP WHEN THE SWITCH IS TURNED OFF.	(1) FAULTY SWITCH.	(1) CHECK SWITCH IN LOW, HIGH AND INTERMITTENT POSITION. (2) ENSURE PARK SWITCH HAS CLEAN GROUND.
WIPER BLADES SLAP AGAINST COWL SCREEN OR WINDOW MOLDINGS.	(1) WIPER ARMS ARE PARKED INCORRECTLY.	(1) PARK WIPER ARMS. REFER TO WIPER ARM ADJUSTMENT.
BLADES CHATTER.	(1) FOREIGN SUBSTANCE SUCH AS POLISH ON GLASS OR BLADES. (2) ARMS TWISTED, BLADE AT WRONG ANGLE ON GLASS. (3) BLADE STRUCTURE BENT. (4) BLADE ELEMENT HAS PERMANENT SET.	(1) CLEAN GLASS AND BLADE ELEMENT WITH NON-ABRASIVE CLEANER. (2) REPLACE ARM. (3) REPLACE BLADE. (4) REPLACE BLADE ELEMENT.
WIPER KNOCK AT REVERSAL.	(1) LINKAGE BUSHINGS WORN. (2) ARMATURE ENDPLAY IN MOTOR.	(1) REPLACE WORN LINK. REFER TO WIPER LINKAGE REMOVAL AND INSTALLATION. (2) REPLACE WIPER MOTOR. REFER TO WIPER MOTOR REMOVAL AND INSTALLATION.

DIAGNOSIS AND TESTING (Continued)

CONDITION	POSSIBLE CAUSES	CORRECTION
WIPER MOTOR WILL NOT RUN.	(1) BLOWN FUSE. (2) NEW FUSE BLOWS. (3) NEW FUSE BLOWS. (4) NO VOLTAGE AT MOTOR. (5) POOR GROUND.	(1) REPLACE FUSE, AND RUN SYSTEM. (2) CHECK FOR SHORT IN WIRING OR SWITCH. (3) REPLACE FUSE, REMOVE MOTOR CONNECTOR, TURN SWITCH ON, FUSE DOES NOT BLOW, REPLACE MOTOR. (4) CHECK SWITCH AND WIRING HARNESS. REFER TO WIRING DIAGRAMS. (5) REPAIR GROUND WIRE CONNECTION AS NECESSARY.

WINDSHIELD WIPER/WASHER SWITCH

To test the switch, refer to the Front Windshield Wiper/Washer Switch Continuity Test table and (Fig. 8).

FRONT WINDSHIELD WIPER/WASHER SWITCH CONTINUITY TEST

SWITCH POSITION	MODE	CONTINUITY BETWEEN
WIPER	OFF	PIN C-1 AND C-6
	LOW/MIST	PIN C-4 AND C-6
	HIGH	PIN C-4 AND C-5
	WASH	PIN C-4 AND C-3
	INTERMITTENT	CANNOT BE CHECKED

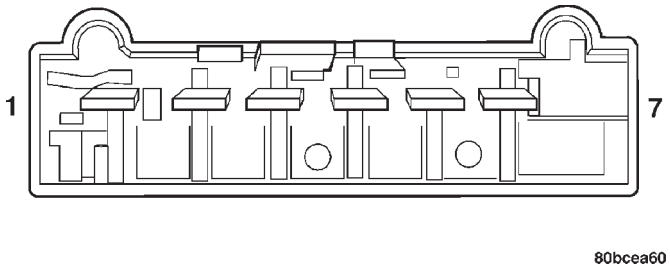

Fig. 8 Windshield Wiper/Washer Switch Connector (C)

FRONT AND REAR WINDSHIELD WASHER SYSTEM

Whenever a front windshield washer malfunction occurs, first verify that the windshield washer pump connector and the multi-function switch, front windshield wiper/washer switch connector is properly connected before starting diagnosis and testing. Refer to the Front Windshield Washer System Test table.

DIAGNOSIS AND TESTING (Continued)

FRONT AND REAR WINDSHIELD WASHER SYSTEM TEST

CONDITION	POSSIBLE CAUSES	CORRECTION
PUMP RUNS NO FLUID FLOWING.	1. NO FLUID IN THE RESERVOIR. 2. NOZZLE PLUGGED OR FROZEN. 3. BROKEN, LOOSE OR PINCHED HOSE. 4. FAULTY PUMP.	1. FILL RESERVOIR. 2. THAW AND CHECK FLOW IF BLOCKED 3. CHECK FLOW THROUGH HOSE CONNECTIONS. 4. APPLY BATTERY VOLTAGE TO MOTOR TERMINALS, REPLACE IF PUMP DOES NOT RUN.
SYSTEM OPERATES INTERMITTENTLY.	1. LOOSE WIRE CONNECTION. 2. FAULTY SWITCH.	1. CHECK WIRE CONNECTIONS. 2. DISCONNECT WIRE HARNESS USE VOLTMETER TO CHECK SWITCH.
SYSTEM OUTPUT IS LOW.	1. PINCHED HOSE. 2. HOSE BLOCKED.	1. CHECK FLOW THROUGH HOSE CONNECTION. 2. DISCONNECT HOSE AT NOZZLE CHECK FOR FLOW. REPLACE AS NECESSARY.

REMOVAL AND INSTALLATION

FRONT WINDSHIELD WIPER ARM

REMOVAL

(1) Place the wiper arm/blades in the PARK position and turn ignition OFF.

(2) Open hood.

(3) Using a trim stick (special tool #C-4755) or equivalent, gently pry up on the wiper arm nut cap and remove (Fig. 9).

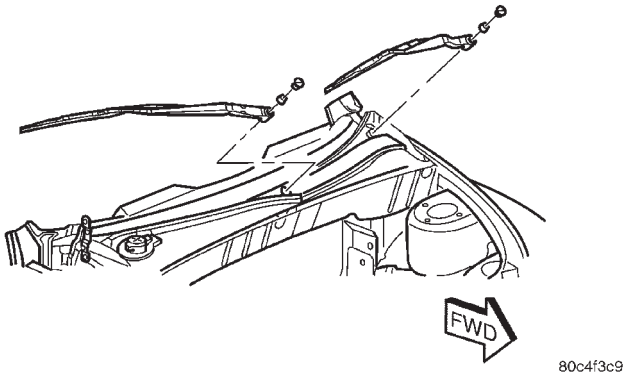

Fig. 9 Front Wiper Arm Remove/Install

(4) Remove wiper arm retaining nut (Fig. 9).

(5) Remove the arm from the pivot using a rocking motion while the arm is in an over/centered position (Fig. 9).

(6) Clean metal splinters OFF the pivot shafts.

INSTALLATION

Before installation activate wiper system to ensure the wiper module is in the PARK position. Position wiper arms so that the tip of the driver's blade and the middle of the passenger's blade is on the park line on the windshield. Refer to Adjustments in this section for Wiper Arm Adjustment.

(1) Place the arm on the pivot while the arm is in an over/centered position (Fig. 9).

(2) Install the wiper arm retaining nut (Fig. 9) and torque to 21 N·m (190 in. lbs.).

(3) Install the wiper arm nut cap (Fig. 9).

(4) Close hood.

(5) Verify system operation.

FRONT WINDSHIELD WIPER BLADE

REMOVAL

(1) Lift wiper arm to the over center position.

(2) Remove blade assembly from arm by pushing release tab under arm tip and slide blade away from arm tip (Fig. 10).

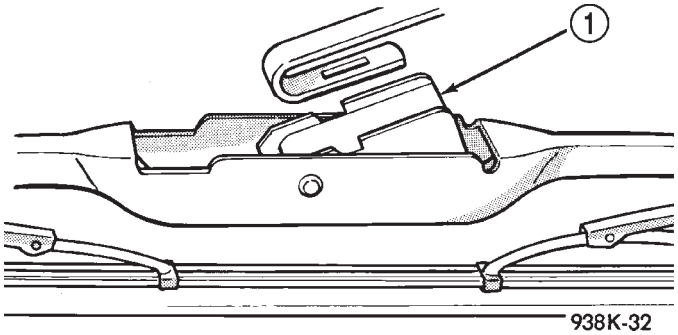

Fig. 10 Front Windshield Wiper Blade Assembly Remove/Install

1 – RELEASE TAB

(3) Gently place wiper arm tip on glass surface.

REMOVAL AND INSTALLATION (Continued)

INSTALLATION

(1) Install blade assembly on arm by pushing tab under the hook on the arm tip and slide blade into arm tip until it clicks (Fig. 10).

(2) Let wiper arm/blade rest on front windshield.

(3) Verify system operation.

FRONT WINDSHIELD WIPER BLADE ELEMENT

REMOVAL

(1) Lift wiper arm to raise blade off glass.

(2) Remove blade assembly from arm by pushing release tab under arm tip and slide blade away from arm tip (Fig. 10).

(3) Let wiper arm rest on front windshield.

(4) Remove wiping element from blade assembly. Pull stopper of the rubber element out of the end claw together with vertebra (metal rails) (Fig. 11).

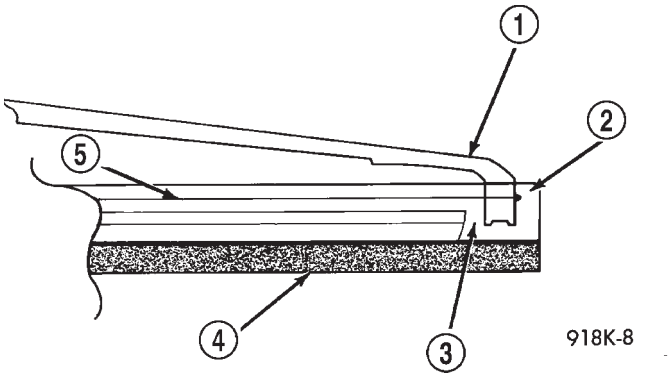

Fig. 11 Wiper Blade and Element - Typical

1 – CLAW
2 – TO GRASP AND PULL
3 – CHANNEL
4 – RUBBER ELEMENT
5 – VERTEBRA

INSTALLATION

After Installation, check that the element and vertebra are through all claws and the final claw is locked in the stopper.

(1) Install wiping element into blade assembly. Push stopper of the rubber element in the end claw together with vertebra (metal rails) (Fig. 11).

(2) Install blade assembly on arm by pushing tab under the hook on the arm tip and slide blade into arm tip (Fig. 10).

(3) Let wiper arm/blade rest on front windshield.

(4) Verify system operation.

FRONT WINDSHIELD WIPER MODULE

REMOVAL

(1) Open hood.

(2) Disconnect and isolate the battery negative cable (Fig. 12).

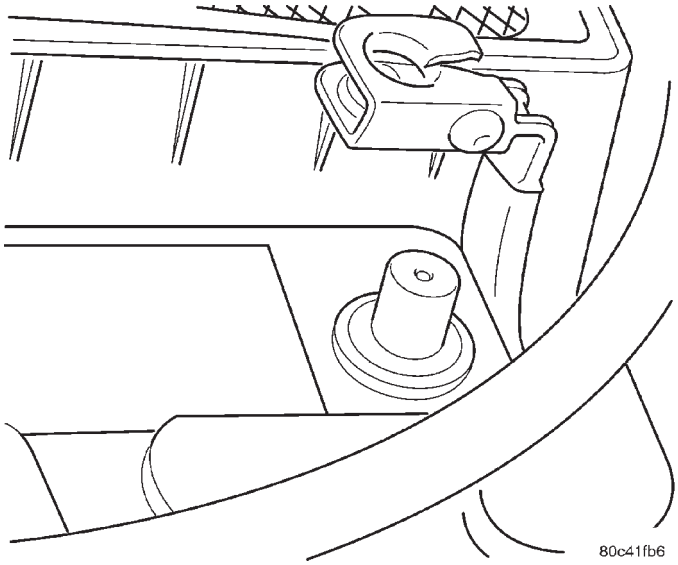

Fig. 12 Battery Negative Cable Remove/Install

(3) Using a trim stick (special tool #C-4755) or equivalent, gently pry up on the wiper arm nut cap and remove (Fig. 9).

(4) Remove wiper arm retaining nut (Fig. 9).

(5) Remove the arm from the pivot using a rocking motion while the arm is in an over/centered position (Fig. 9).

(6) Remove the cowl cover. The right side cover overlaps the left side cover, so they both must be removed.

(a) Remove the rear engine compartment seal at the cowl.

(b) Remove the three push retainers to the right side cowl cover and remove from vehicle.

(c) Remove the two push retainers to the left side cowl cover and remove from vehicle.

(7) Disconnect front windshield wiper motor posi-lock harness connector.

(8) Remove three front windshield wiper module mounting bolts and remove module from vehicle (Fig. 13).

NOTE: If replacing the front windshield wiper linkage, the wiper motor must be transferred to the new linkage.

- **Disconnect drive link from motor crank ball joint.**
- **Remove three bolts to the front windshield wiper motor and separate from linkage.**

REMOVAL AND INSTALLATION (Continued)

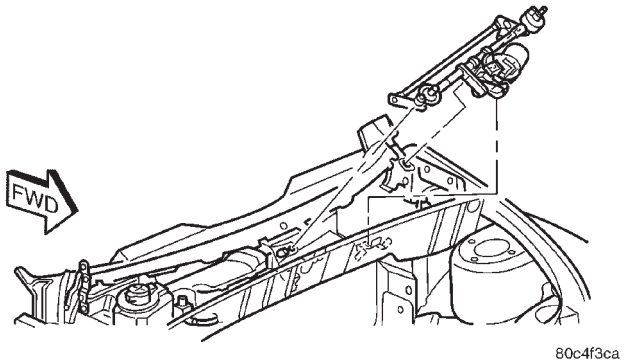

Fig. 13 Front Windshield Wiper Module Remove/ Install

INSTALLATION

NOTE: If the front windshield wiper linkage was replaced, install the wiper motor on the new linkage.

- **Place the motor on the wiper module and install the three bolts to the front windshield wiper motor.**
- **Install the bell crank and one bell crank retaining nut in the same position a it was on the old module after verifying that the motor is inn the park position.**

(1) Place the front windshield wiper module into cowl area and install the three mounting bolts (Fig. 13). Torque the mounting screws to 8 N·m (75 in. lbs.).

(2) Connect the front windshield wiper motor posi-lock harness connector.

(3) Install the cowl cover. The right side cover overlaps the left side cover.

(a) Place the left side cowl cover into position and install the two push retainers.

(b) Place the right side cowl cover into position and install the two push retainers.

(c) Install the rear engine compartment seal at the cowl.

Before installation of the front windshield wiper arms, activate the wiper system to ensure the wiper module is in the PARK position. Position wiper arms so that the tip of the driver's blade and the middle of the passenger's blade is on the park line on the windshield. Refer to Adjustments in this section for Wiper Arm Adjustment.

(4) Place the arm on the pivot while the arm is in an over/centered position (Fig. 9).

(5) Install the wiper arm retaining nut (Fig. 9) and torque to 21 N·m (190 in. lbs.)..

(6) Install the wiper arm nut cap (Fig. 9).

(7) Connect the battery negative cable (Fig. 12).

(8) Close hood.

(9) Verify vehicle and system operation.

FRONT WINDSHIELD WIPER MOTOR

REMOVAL

To service the front windshield wiper motor, the front windshield wiper module must first be removed.

(1) Open hood.

(2) Disconnect and isolate the battery negative cable (Fig. 12).

(3) Using a trim stick (special tool #C-4755) or equivalent, gently pry up on the wiper arm nut cap and remove (Fig. 9).

(4) Remove wiper arm retaining nut (Fig. 9).

(5) Remove the arm from the pivot using a rocking motion while the arm is in an over/centered position (Fig. 9).

(6) Remove the cowl cover. The right side cover overlaps the left side cover, so they both must be removed.

(a) Remove the rear engine compartment seal at the cowl.

(b) Remove the three push retainers to the right side cowl cover and remove from vehicle.

(c) Remove the two push retainers to the left side cowl cover and remove from vehicle.

(7) Disconnect front windshield wiper motor posi-lock harness connector.

(8) Remove three front windshield wiper module mounting bolts and remove module from vehicle (Fig. 13).

(9) Remove the one bell crank retaining nut and remove bell crank.

(10) Remove three bolts to the front windshield wiper motor and separate from module.

INSTALLATION

(1) Place the motor on the wiper module and install the three bolts to the front windshield wiper motor.

(2) Install the bell crank and one bell crank retaining nut.

(3) Place the front windshield wiper module into cowl area and install the three mounting bolts (Fig. 13). Torque the mounting screws to 7 to 9 N·m (60 to 80 in. lbs.).

(4) Connect the front windshield wiper motor posi-lock harness connector.

(5) Install the cowl cover. The right side cover overlaps the left side cover.

(a) Place the left side cowl cover into position and install the two push retainers.

(b) Place the right side cowl cover into position and install the two push retainers.

REMOVAL AND INSTALLATION (Continued)

(c) Install the rear engine compartment seal at the cowl.

Before installation of the front windshield wiper arms, activate the wiper system to ensure the wiper module is in the PARK position. Position wiper arms so that the tip of the driver's blade and the middle of the passenger's blade is on the park line on the windshield. Refer to Adjustments in this section for Wiper Arm Adjustment.

(6) Place the arm on the pivot while the arm is in an over/centered position (Fig. 9).

(7) Install the wiper arm retaining nut (Fig. 9).

(8) Install the wiper arm nut cap (Fig. 9).

(9) Connect the battery negative cable (Fig. 12).

(10) Close hood.

(11) Verify vehicle and system operation.

FRONT WINDSHIELD WIPER/WASHER SWITCH

To service the front windshield wiper/washer switch, the multi-function switch must first be removed.

REMOVAL

(1) Open hood.

(2) Disconnect and isolate the battery negative cable (Fig. 12).

(3) Remove both upper and lower steering column shrouds. Refer to Instrument Panel Systems, Steering Column Shroud Removal and Installation.

(4) Disconnect both posi-lock harness connectors at the rear of the multi-function switch (Fig. 14)

(5) Remove multi-function switch mounting screws (Fig. 14) and remove switch from vehicle.

(6) Remove the two torx screws retaining the wiper/washer switch to the multi-function switch and separate (Fig. 15).

INSTALLATION

(1) Place new wiper/washer switch next to the multi-function switch and install two screws (Fig. 15).

(2) Place the multi-function switch into place and install the two mounting screws (Fig. 14). Torque multi-function switch to column retaining screws to 3 N·m (27 in. lbs.).

(3) Connect both posi-lock harness connectors at the rear of the multi-function switch and front wiper/washer switch (Fig. 14)

(4) Install both upper and lower steering column shrouds. Refer to Instrument Panel Systems, Steering Column Shroud Removal and Installation.

(5) Connect the battery negative cable (Fig. 12).

(6) Close hood.

(7) Verify vehicle and system operation.

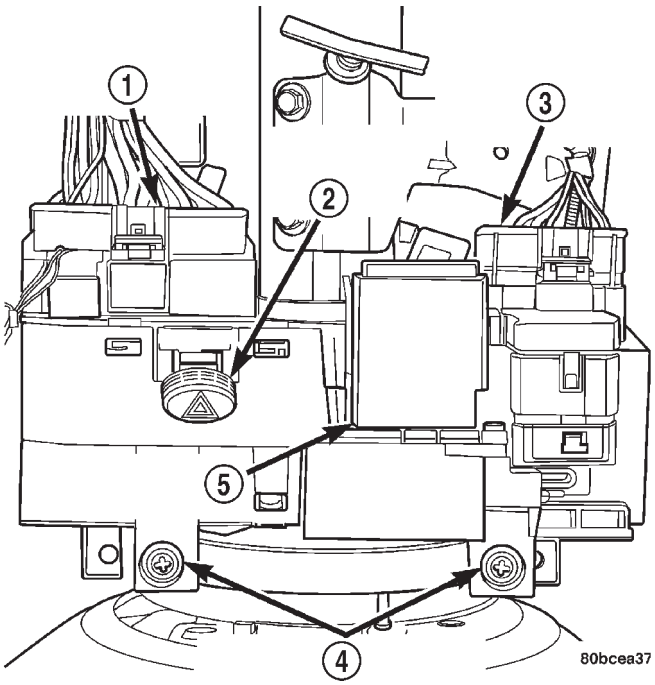

Fig. 14 Multi-Function Switch Remove/Install

1 – MULTI-FUNCTION SWITCH CONNECTOR
2 – HAZARD/WARNING SWITCH
3 – WINDSHIELD WIPER/WASHER SWITCH CONNECTOR
4 – MOUNTING SCREWS
5 – COMBINATION FLASHER

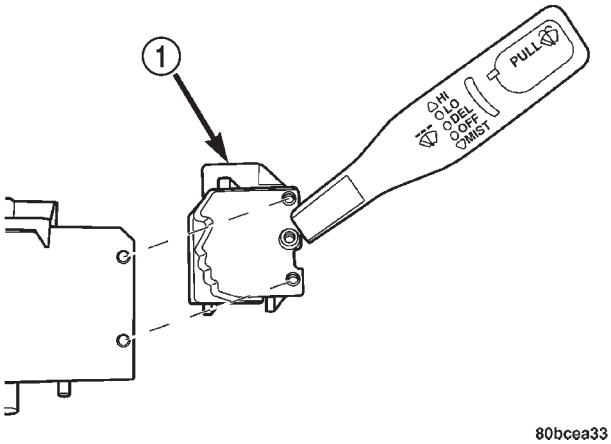

Fig. 15 Front Windshield Wiper/Washer Switch Remove/Install

1 – WINDSHIELD WIPER/WASHER SWITCH

FRONT WINDSHIELD WASHER NOZZLE

REMOVAL

(1) Open hood.

(2) Remove the underhood, rear hood silencer pad fasteners.

(3) Disconnect the windshield washer hose from the underside of the front washer nozzle.

REMOVAL AND INSTALLATION (Continued)

(4) Lower hood down.

(5) Using a plastic body filler spreader or equivalent (credit card), gently place it underneath the front of the washer nozzle. Be careful not to damage the hood seal underneath the nozzle.

(6) Rock the nozzle back and forth slightly to release it from the hood panel.

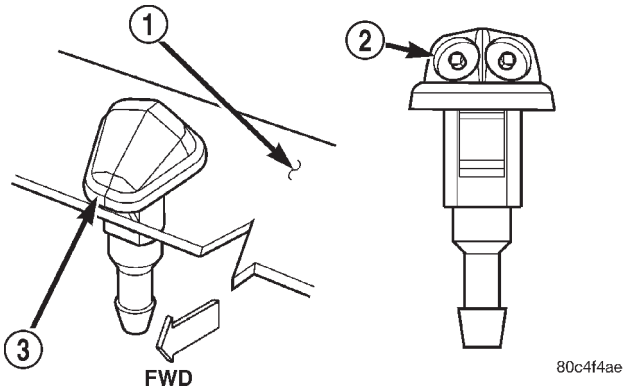

Fig. 16 Front Windshield Washer Nozzle

1 – HOOD
2 – ADJUST WITH A PIN
3 – NOZZLE

INSTALLATION

(1) Place the nozzle into hood opening and snap into place.

(2) Open hood.

(3) Connect the windshield washer hose to the underside of the washer nozzle.

(4) After connecting hose, check for proper system function and to assure leak free connections by actuating the front washer system switch from inside of vehicle.

(5) Install the underhood, rear hood silencer pad fasteners.

(6) Close hood.

WINDSHIELD WASHER HOSE

REMOVAL

For damaged or plugged windshield washer hose, remove the affected piece of hose and replace with bulk hose. It may be necessary to de-trim parts of the interior to locate the problem portion of hose. Refer to (Fig. 17), (Fig. 18), and (Fig. 19) hose routing. Refer also to Body for interior component Removal and Installation.

INSTALLATION

Depending on how much of the vehicle has been de-trimmed, either splice in a small piece of hose or replace the entire length of affected hose. Verify vehicle and system operation upon reassembly.

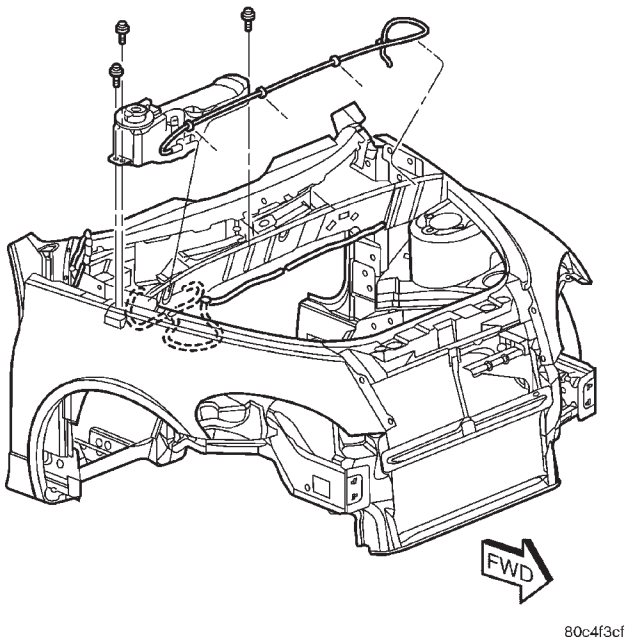

Fig. 17 Front Cowl Area/Engine Compartment Hose Routing - Typical

WINDSHIELD WASHER PUMP

REMOVAL

(1) Open hood.

(2) Turn wipers ON, while the key is in the ACCESSORY position and when the blades are at their full up position, turn the key OFF to stop the blades in this up position.

(3) Disconnect and isolate the battery negative cable (Fig. 12).

(4) Remove the right cowl cover.

(a) Remove the rear engine compartment seal at the cowl.

(b) Remove the three push retainers to the right side cowl cover and remove from vehicle.

(5) Remove three reservoir retaining screws.

(6) Disconnect the pump wire connector.

(7) Disconnect the washer hose connections.

(8) Lift washer reservoir out of cowl area and drain into bucket.

(9) Gently pry pump away from reservoir and out of grommet. Care must be taken not to puncture reservoir.

(10) Remover rubber grommet from reservoir.

INSTALLATION

CAUTION: A new grommet must be used every time the pump is removed/installed from the reservoir to prevent possible leaks in the future.

(1) Install new grommet into the reservoir.

REMOVAL AND INSTALLATION (Continued)

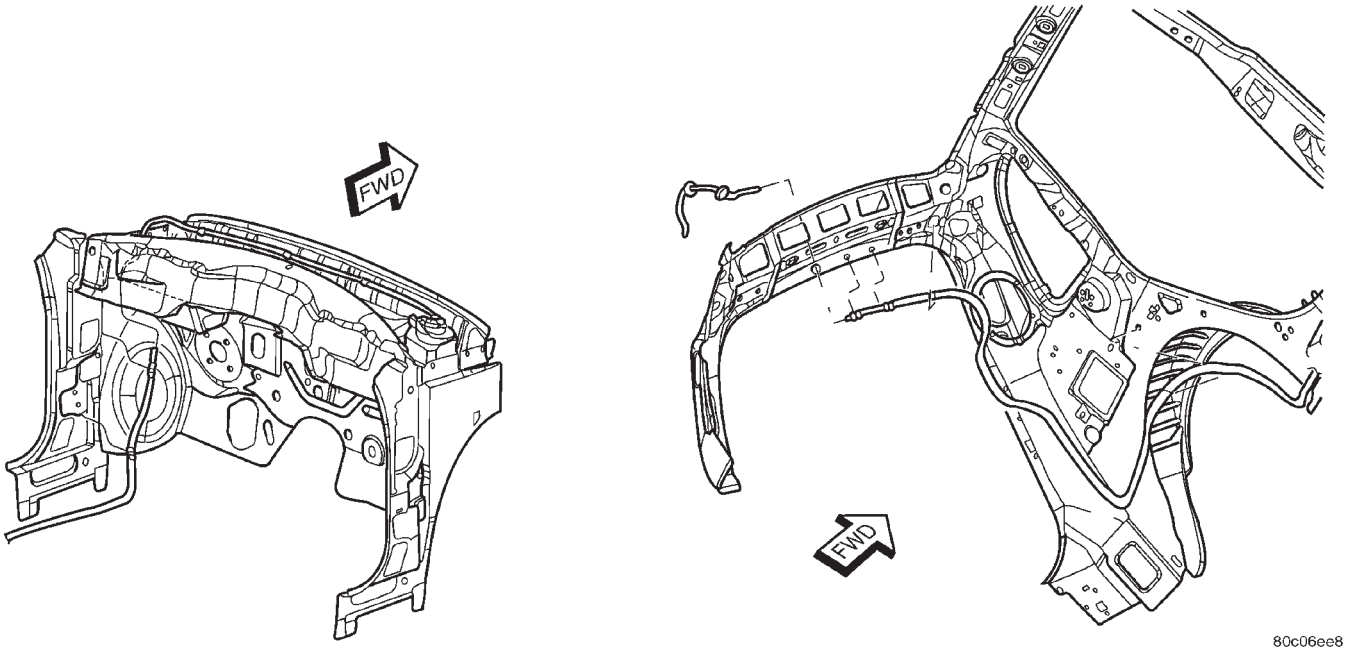

Fig. 18 Body Hose Routing

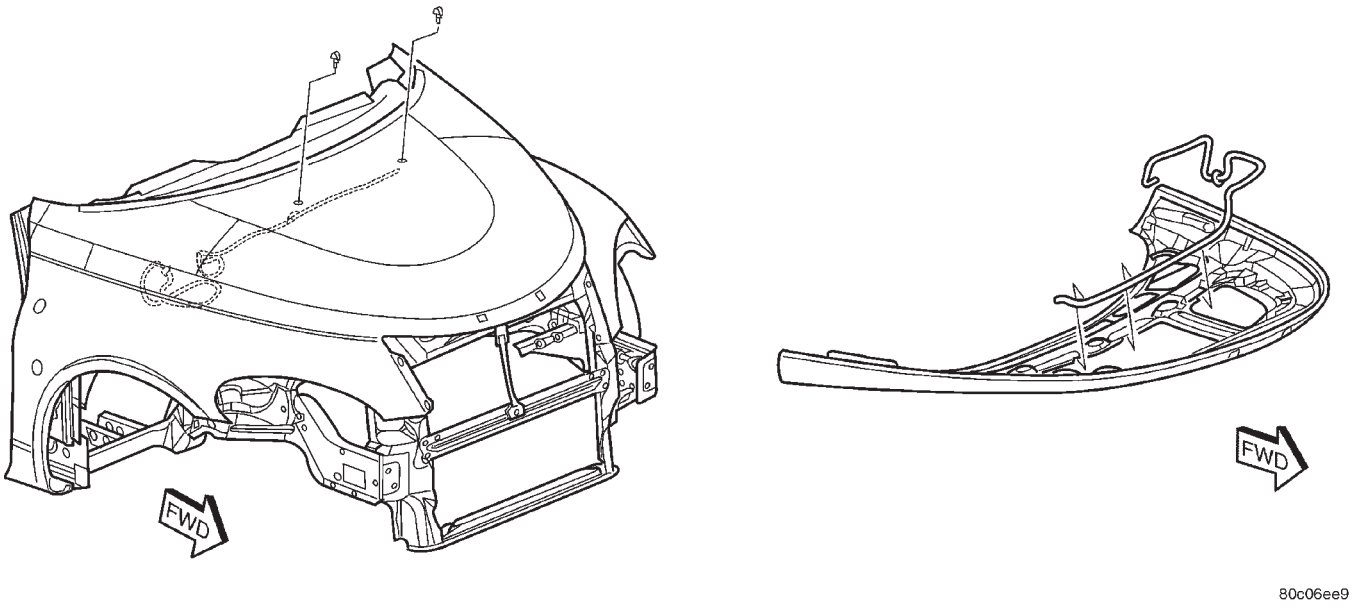

Fig. 19 Hood Hose Routing - Typical

(2) Insert pump into pump grommet and firmly snap into reservoir.

(3) Place reservoir into cowl area and connect the washer hoses.

NOTE: The hose with the white stripe goes on the white side of the pump and the black hose on the black side of the pump.

(4) Connect the pump wire connector.

(5) Install the three reservoir retaining screws. Torque screws to 8 N·m (70 in. lbs.).

(6) Install the right cowl cover.

(a) Place the right side cowl cover into position and install the two push retainers.

(b) Install the rear engine compartment seal at the cowl.

(7) Connect the battery negative cable (Fig. 12).

(8) Close hood.

(9) Verify vehicle and system operation.

REMOVAL AND INSTALLATION (Continued)

WINDSHIELD WASHER RESERVOIR

REMOVAL

(1) Open hood.

(2) Turn wipers ON, while the key is in the ACCESSORY position and when the blades are at their full up position, turn the key OFF to stop the blades in this up position.

(3) Disconnect and isolate the battery negative cable (Fig. 12).

(4) Remove the right cowl cover. The right side cover overlaps the left side cover.

(a) Remove the rear engine compartment seal at the cowl.

(b) Remove the three push retainers to the right side cowl cover and remove from vehicle.

(5) Remove three reservoir retaining screws (Fig. 20).

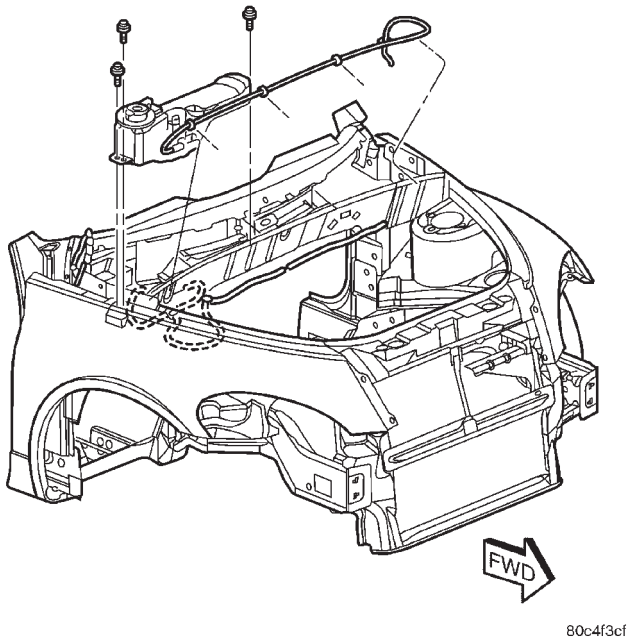

Fig. 20 Windshield Washer Reservoir Remove/Install

(6) Disconnect the pump wire connector.

(7) Disconnect the washer hose connections (Fig. 20).

(8) Lift washer reservoir out of cowl area and drain into bucket (Fig. 20).

NOTE: If replacing the washer reservoir, the washer pump must be transferred to the new reservoir. The new reservoir will come with a new washer pump grommet.

(9) Gently pry pump away from reservoir and out of grommet.

INSTALLATION

(1) Insert pump into pump grommet and firmly snap into reservoir.

(2) Place reservoir into cowl area and connect the washer hoses (Fig. 20).

NOTE: The hose with the white stripe goes on the white side of the pump and the black hose on the black side of the pump.

(3) Connect the pump wire connector.

(4) Install the three reservoir retaining screws. Torque screws to 8 N·m (70 in. lbs.).

(5) Install the cowl cover. The right side cover overlaps the left side cover.

(a) Place the right side cowl cover into position and install the two push retainers.

(b) Install the rear engine compartment seal at the cowl.

(6) Connect the battery negative cable (Fig. 12).

(7) Close hood.

(8) Verify vehicle and system operation.

CLEANING AND INSPECTION

WINDSHIELD WIPER BLADE(S)

Wiper blades exposed to the weather for a long period of time tend to lose their wiping effectiveness. Periodic cleaning of the wiper blade is recommended to remove the accumulation of salt and road grime. The wiper blades, arms and windshield should be cleaned with a sponge or cloth and a mild detergent or nonabrasive cleaner. If the wiper blades continue to streak or smear, they should be replaced. The wiper blade should run smoothly across the windshield in both directions. The wiper blade should slightly roll over center when the blade reverses direction. A wiper blade insert that has lost flexibility or a wiper arm that has lost spring tension, will cause the blade to skip or chatter across the windshield. If the wiper blades are new and the wiper arm spring tension is OK and a chattering sound is emitted from the wiper(s), the wiper blade is not rolling over center. If this condition exists, refer to Adjustments, Wiper Arm Adjustment in this section.

ADJUSTMENTS

FRONT WINDSHIELD WIPER ARM(S)

(1) Open hood.

(2) Using a trim stick (special tool #C-4755) or equivalent, gently pry up on the wiper arm nut cap and remove (Fig. 9).

(3) Remove wiper arm retaining nut (Fig. 9).

ADJUSTMENTS (Continued)

(4) Remove the arm from the pivot using a rocking motion while the arm is in an over/centered position (Fig. 9).

(5) The wiper blade should be within the tolerance shown within the tick mark. The park line or tick mark, is on the windshield (Fig. 21).

NOTE: In the event that the wiper blade tip excessively strikes the cowl screen due to long term normal wear, reposition the wiper blade heel slightly above the park line. Make sure that the wipers are in the PARK position.

(6) Place the arm on the pivot while the arm is in an over/centered position (Fig. 9).

(7) Install the wiper arm retaining nut (Fig. 9) and torque to 21 N·m (190 in. lbs.).

(8) Install the wiper arm nut cap (Fig. 9).

(9) Close hood.

(10) Verify system operation.

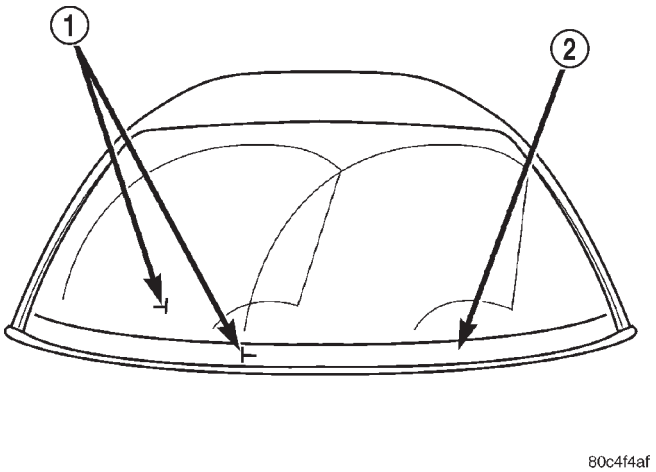

Fig. 21 Windshield Wiper Blade/Arm Park Lines

1 – PARK LINES
2 – BLACK OUT AREA

REAR WINDSHIELD WIPER/WASHER SYSTEM

TABLE OF CONTENTS

	page
DESCRIPTION AND OPERATION	
REAR WINDSHIELD WIPER SYSTEM	15
REAR WINDSHIELD WASHER SYSTEM	16
DIAGNOSIS AND TESTING	
REAR WINDSHIELD WIPER/WASHER DIAGNOSTICS	16
REAR WINDSHIELD WIPER/WASHER SWITCH	17
REMOVAL AND INSTALLATION	
REAR WINDSHIELD WIPER ARM	17
REAR WINDSHIELD WIPER BLADE	18
REAR WINDSHIELD WIPER MOTOR	18
REAR WINDSHIELD WASHER NOZZLE	19
REAR WINDSHIELD WIPER/WASHER SWITCH	19

DESCRIPTION AND OPERATION

REAR WINDSHIELD WIPER SYSTEM

DESCRIPTION

An electrically operated intermittent rear wiper and washer system is standard factory-installed equipment on this model. The driver controls the rear wiper system with the switch located on the instrument panel accessory switch bezel. The rear wiper is controlled by ignition switched battery current through a fuse in the fuse block, and will operate only when the ignition switch is in the Accessory or ON positions.

The intermittent rear wiper system allows the driver to select an intermittent wipe mode. The intermittent wipe mode delay time has a fixed delay interval of about four to seven seconds between sweeps. This system also has a wipe-after-wash feature that operates the rear wiper for as long as the washer pump is energized, then provides about two additional sweeps of the wiper after the washer pump is de-energized.

The rear wiper motor module operates on a separate non-switched battery current feed through a fuse in the fuse block.

The rear wiper system includes the following components:

- Rear wiper and washer switch.
- Rear wiper arm and blade.
- Rear wiper motor module.

OPERATION

A push-button at the center of the instrument panel, below the radio, turns the rear wiper ON or OFF. When this switch is pressed the rear wiper will operate at a fixed interval of about four seconds.

Press and hold the switch as long as spray is desired. If the switch is depressed while the wipers are ON, the wipers will operate for a few seconds after the switch is released then resume the previously set mode of intermittent wiper. If the switch is depressed when the wipers are OFF, the wipers will operate for two cycles, then turn off.

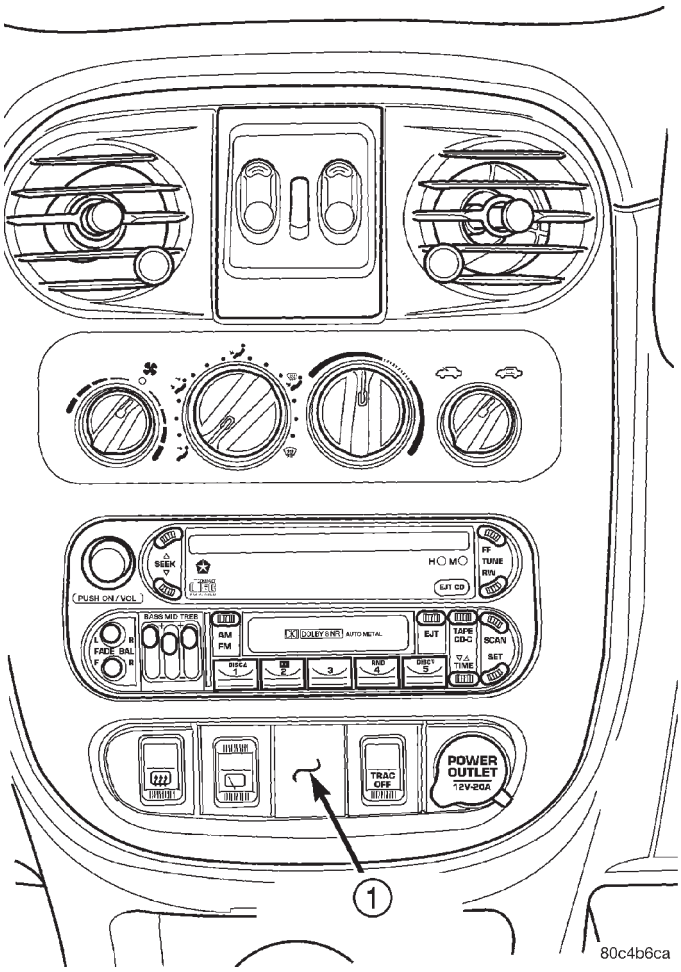

Fig. 1 Rear Windshield Wiper Switch Location

1 – ACCESSORY SWITCH BEZEL

DESCRIPTION AND OPERATION (Continued)

NOTE: The washers will stop spraying if the switch is pressed longer than 30 seconds.

REAR WINDSHIELD WASHER SYSTEM

DESCRIPTION

The driver controls all rear washer system functions with the switch integral to the accessory switch bezel in the instrument panel. The rear washer system is controlled by ignition switched battery current through a fuse in the fuse block, and will operate only when the ignition switch is in the ACCESSORY or ON positions.

This system has a wipe-after-wash feature that operates the rear wiper for as long as the washer pump is energized, then provides about two additional sweeps of the wiper after the washer pump is de-energized.

The rear washer system shares the washer reservoir of the front windshield washer system. The front washer pump is a two way pump that is reversed depending on which switch is activated.

The rear washer system includes the following components:

- Washer reservoir and pump
- Wiper and washer switch
- Rear washer nozzle and plumbing

OPERATION

The vehicle operator selects the rear washer system functions using the wiper and washer switch, which is located on the instrument panel, accessory switch bezel. The instrument panel switch provides a hard wired ignition switched battery current feed to the rear washer pump for the washer system function.

Press and hold the switch as long as spray is desired. If the switch is depressed while the wipers are ON, the wipers will operate for a few seconds after the switch is released then resume the previously set mode of intermittent wiper. If the switch is depressed when the wipers are OFF, the wipers will operate for two cycles, then turn off.

NOTE: The washers will stop spraying if the switch is pressed longer than 30 seconds.

DIAGNOSIS AND TESTING

REAR WINDSHIELD WIPER/WASHER DIAGNOSTICS

The rear window wiper system operates in several modes:

- Intermittent wipe
- Wash
- Wipe after wash

(1) Check the fused B(+) fuse in the fuse block. If OK, go to Step 2. If not OK, repair the shorted circuit or component as required and replace the faulty fuse.

(2) Check for battery voltage at the fused B(+) fuse in the fuse block. If OK, go to Step 3. If not OK, repair the open fused B(+) circuit to the Power Distribution Center (PDC) fuse as required.

(3) Check the fused ignition switch output (run/accessory) fuse in the fuse block. If OK, go to Step 4. If not OK, repair the shorted circuit or component as required and replace the faulty fuse.

(4) Turn the ignition switch to the On position. Check for battery voltage at the fused ignition switch output (RUN/ACCESSORY) fuse in the fuse block. If OK, turn the ignition switch to the Off position and go to Step 5. If not OK, repair the open fused ignition switch output (RUN/ACCESSORY) circuit to the ignition switch as required.

(5) Disconnect and isolate the battery negative cable. Disconnect the rear windshield wiper/washer switch wire harness connector. Reconnect the battery negative cable. Turn the ignition switch to the ON position. Check for battery voltage at the fused ignition switch output (RUN/ACCESSORY) circuit cavity of the instrument panel wire harness connector for the rear windshield wiper and washer switch. If OK, go to Step 6. If not OK, repair the open fused ignition switch output (RUN/ACCESSORY) circuit to the fuse block fuse as required.

(6) Turn the ignition switch to the OFF position. Disconnect and isolate the battery negative cable.

(7) Remove the liftgate inner trim panel. Disconnect the liftgate wire harness connector from the rear wiper motor. Check for continuity between the ground circuit cavity of the liftgate wire harness connector for the rear wiper motor and a good ground. There should be continuity. If not OK, repair the open ground circuit to ground as required.

DIAGNOSIS AND TESTING (Continued)

(8) Reconnect the battery negative cable. Check for battery voltage at the fused B(+) circuit cavity of the liftgate wire harness connector for the rear wiper motor. If not OK, repair the open fused B(+) circuit to the fuse block fuse as required.

(9) Turn the rear wiper switch to the ON position. Check for battery voltage at the rear wiper motor control circuit cavity of the liftgate wire harness connector. If OK, replace the faulty rear wiper motor. If not OK, repair the open rear wiper motor control circuit to the wiper and washer switch as required.

REAR WINDSHIELD WIPER/WASHER SWITCH

The rear windshield wiper/washer switch may be tested in the vehicle or out of the vehicle, on the bench.

IN-VEHICLE TESTING

(1) Remove the switch from the instrument panel but leave the switch connected, refer to Instrument Panel Systems, Accessory Switch Bezel Removal and Installation.

(2) Turn the ignition switch ON.

(3) Using a voltmeter, check for battery voltage at Pin 1 and 2 (Fig. 2).

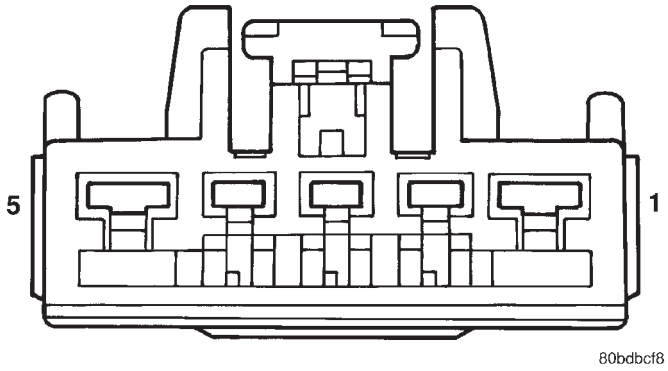

Fig. 2 Rear Windshield Wiper/Washer Switch Harness Connector

(a) If OK, go to Step 4.

(b) If NOT OK, check wiper fuse in the fuse block and the 40 Amp cartridge fuse in the Power Distribution Center (PDC). If fuses are OK, check wiring circuit. Refer to Wiring Diagrams.

(4) Check Pin 5, with switch in the ON position there should be battery voltage and no voltage in the OFF position.

(a) If NOT OK, no voltage in the ON position or voltage in the OFF position. Replace the switch.

BENCH TESTING

(1) First remove switch. Refer to Instrument Panel Systems, Accessory Switch Bezel Removal and Installation.

(2) With switch removed from vehicle, use a jumper wire and connect a 12 volt supply to Pin 1 and 2. Using a third jumper wire, ground Pin 3. Refer to (Fig. 3).

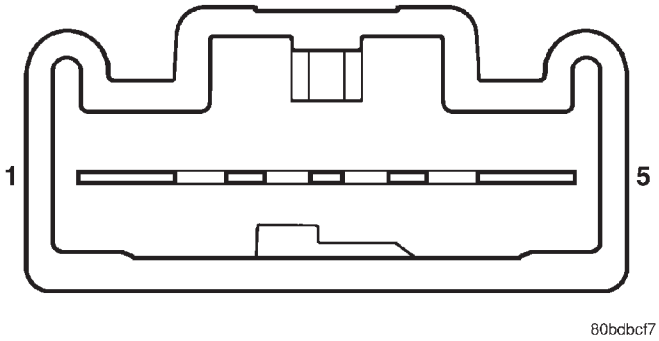

Fig. 3 Rear Window Defogger Switch Connector

(3) Follow the same procedures used for IN-VEHICLE TESTING, except for step Step 2.

REMOVAL AND INSTALLATION

REAR WINDSHIELD WIPER ARM

REMOVAL

(1) Remove the rear wiper arm nut cap.

(2) Remove wiper arm retaining nut.

(3) Use a battery terminal puller to remove the wiper arm from the wiper pivot (Fig. 4).

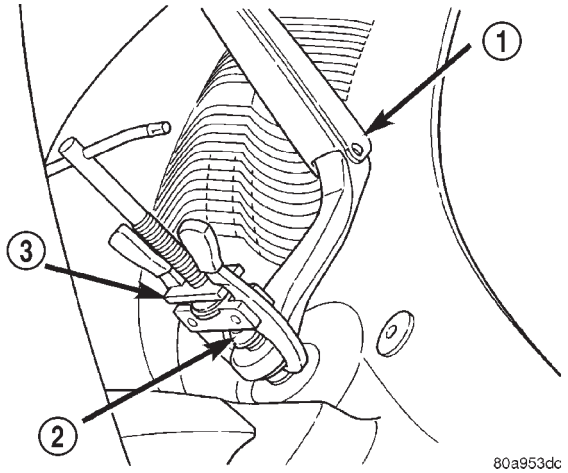

Fig. 4 Wiper Arm Puller

1 – WIPER ARM
2 – WIPER PIVOT
3 – BATTERY TERMINAL PULLER

REMOVAL AND INSTALLATION (Continued)

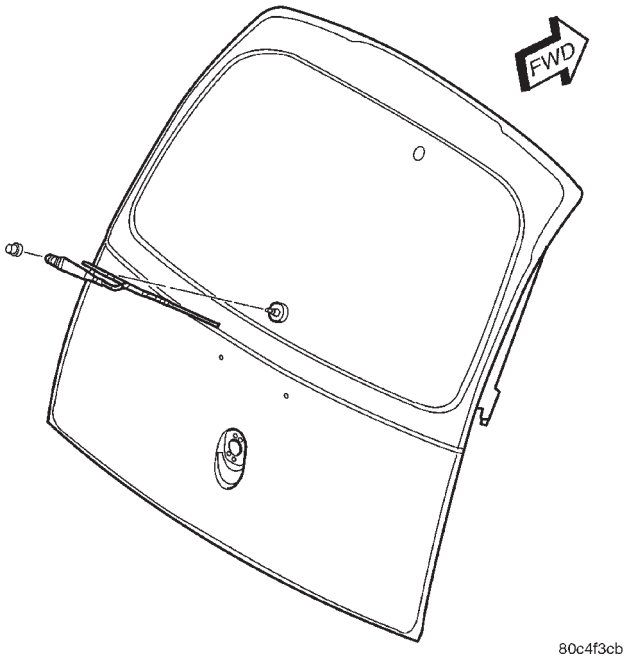

Fig. 5 Rear Windshield Wiper Arm Remove/Install

INSTALLATION

Before installation activate wiper system to ensure the wiper module is in the PARK position. Position wiper arm so that the tip of the blade is on the park line on the windshield.

NOTE: Blade should be parked along bottom EBL grid line. Vertical tick mark shows park tolerance.

(1) Install the arm on the pivot (Fig. 5) and position to tick mark.
(2) Install wiper arm retaining nut and torque to 18-20 N·m (160-175 in. lbs.).
(3) Install the rear wiper arm nut cap.
(4) Verify system operation.

REAR WINDSHIELD WIPER BLADE

REMOVAL

(1) Lift wiper arm from the glass.
(2) Remove blade assembly from arm by pushing release tab under arm tip and slide blade towards pivot (Fig. 7).
(3) Gently place wiper arm tip on glass surface.

INSTALLATION

(1) Install blade assembly on arm by pushing tab under the hook on the arm tip and slide blade into arm tip (Fig. 7).
(2) Let wiper arm/blade rest on glass.
(3) Verify system operation.

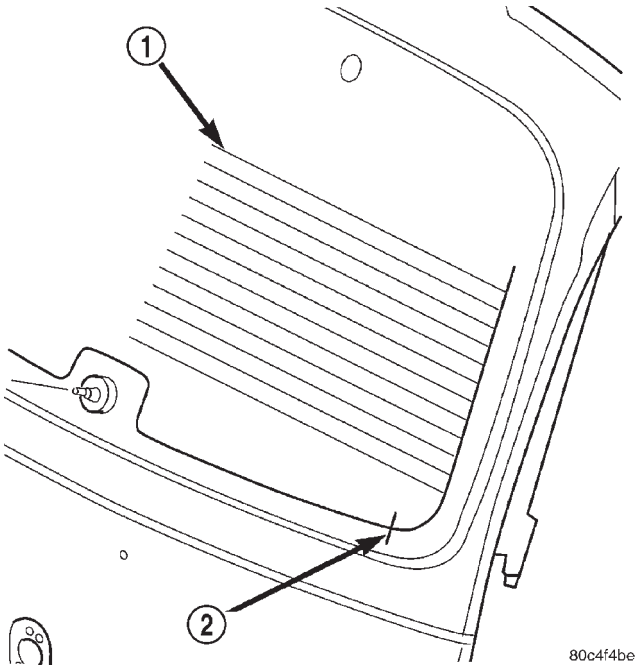

Fig. 6 Rear Windshield Wiper Arm/Blade Tick Mark

1 – EBL GRID LINES
2 – TICK MARK

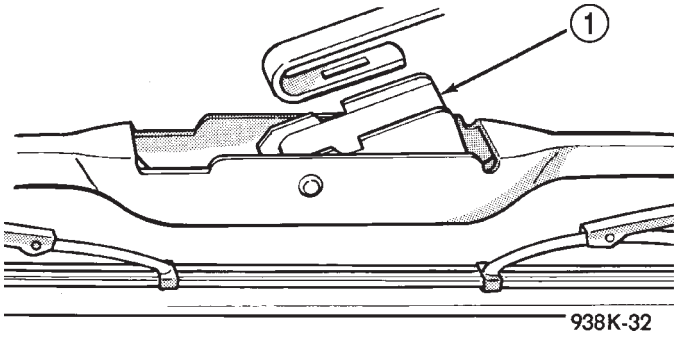

Fig. 7 Rear Windshield Wiper Blade Assembly Remove/Install

1 – RELEASE TAB

REAR WINDSHIELD WIPER MOTOR

REMOVAL

(1) Open hood.
(2) Disconnect and isolate the battery negative cable (Fig. 8).
(3) Remove the rear wiper arm nut cap.
(4) Remove wiper arm retaining nut.
(5) Use a battery terminal puller to remove the wiper arm from the wiper pivot (Fig. 4).
(6) Remove liftgate trim panel. Refer to Body, Removal and Installation, Liftgate Trim Panel.
(7) Disconnect harness connector.

REMOVAL AND INSTALLATION (Continued)

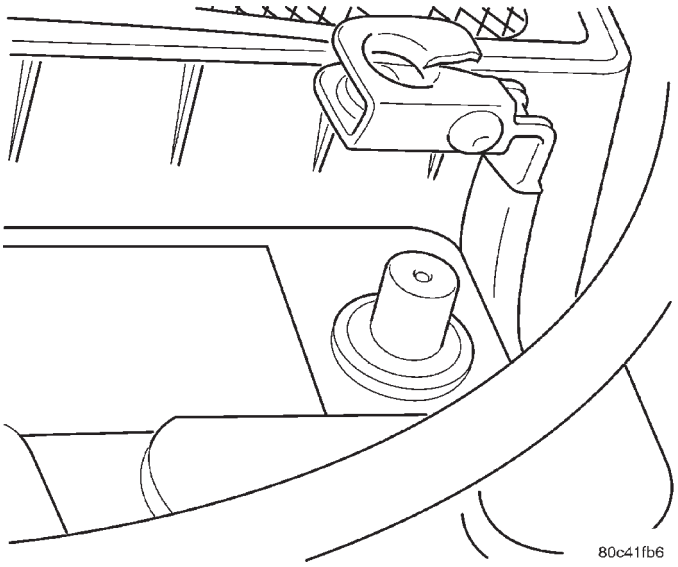

Fig. 8 Battery Negative Cable Remove/Install

(8) Remove three bolts to the rear wiper motor and remove from vehicle (Fig. 9).

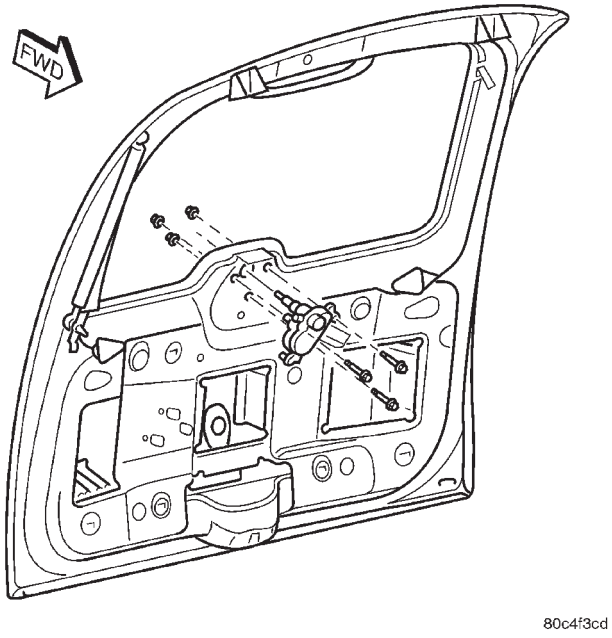

Fig. 9 Rear Windshield Wiper Motor Remove/Install

CAUTION: Use extreme care when taking out motor. Damage to the grommet and or window can occur.

INSTALLATION

Before installation activate wiper system to ensure the wiper module is in the PARK position. Position wiper arm so that the tip of the blade is on the park line on the glass.

NOTE: When servicing the rear wiper motor, replace all three rubber well-nuts.

(1) Install three bolts to the rear wiper motor (Fig. 9). Torque bolts to 1.2 N·m (10 in. lbs.).
(2) Connect harness connector.
(3) Install liftgate trim panel. Refer to Body, Removal and Installation, Liftgate Trim Panel.
(4) Install the arm on the pivot (Fig. 5) while the arm is in an over/centered position.
(5) Install wiper arm retaining nut and torque to 18-20 N·m (160-175 in. lbs.).
(6) Install the rear wiper arm nut cap.
(7) Connect the battery negative cable (Fig. 8).
(8) Close hood.
(9) Verify vehicle and system operation.

REAR WINDSHIELD WASHER NOZZLE

REMOVAL

(1) Open liftgate.
(2) Remove liftgate CHMSL access panel. Refer to Body, Removal and Installation, Liftgate CHMSL Access Panel.
(3) Disconnect the rear washer hose at nozzle.
(4) Remove the nut retaining the rear washer nozzle and remove the nozzle from rear window glass and vehicle.

INSTALLATION

(1) Install the nozzle into rear window opening and retaining nut to the rear washer nozzle and torque to 2.8 N·m (25 in. lbs.).

NOTE: Verify that the nozzle is pointing straight down.

(2) Connect the rear washer hose at nozzle.
(3) Install liftgate CHMSL access panel. Refer to Body, Removal and Installation, Liftgate CHMSL Access Panel.
(4) Close liftgate.
(5) Verify vehicle and system operation.

REAR WINDSHIELD WIPER/WASHER SWITCH

Refer to Instrument Panel Systems, Removal and Installation, Accessory Switch Bezel.

WIPER AND WASHER SYSTEMS

TABLE OF CONTENTS

page

FRONT WINDSHIELD WIPER/WASHER SYSTEM – RHD 1

FRONT WINDSHIELD WIPER/WASHER SYSTEM – RHD

TABLE OF CONTENTS

page

DESCRIPTION AND OPERATION
FRONT WINDSHIELD WIPER SYSTEM - RHD 1
REMOVAL AND INSTALLATION
FRONT WINDSHIELD WIPER MODULE - RHD . . . 1
FRONT WINDSHIELD WIPER MOTOR - RHD 2
WINDSHIELD WASHER HOSE - RHD 3
WINDSHIELD WASHER PUMP - RHD 3
WINDSHIELD WASHER RESERVOIR. 5
ADJUSTMENTS
FRONT WINDSHIELD WIPER ARM(S) - RHD 5

DESCRIPTION AND OPERATION

FRONT WINDSHIELD WIPER SYSTEM - RHD

This section of the service manual will contain wiper and washer system information pertinent only to Right Hand Drive (RHD) Vehicles. Since most of the Description / Operation and Diagnosis / Testing information is unchanged between LHD and RHD vehicles refer to Wiper and Washer Systems for additional information.

REMOVAL AND INSTALLATION

FRONT WINDSHIELD WIPER MODULE - RHD

REMOVAL

(1) Open hood.

(2) Disconnect and isolate the battery negative cable (Fig. 1).

(3) Using a trim stick (special tool #C-4755) or equivalent, gently pry up on the wiper arm nut cap and remove.

(4) Remove wiper arm retaining nut.

(5) Remove the arm from the pivot using a rocking motion while the arm is in an over/centered position.

(6) Remove the cowl cover. The right side cover overlaps the left side cover, so they both must be removed.

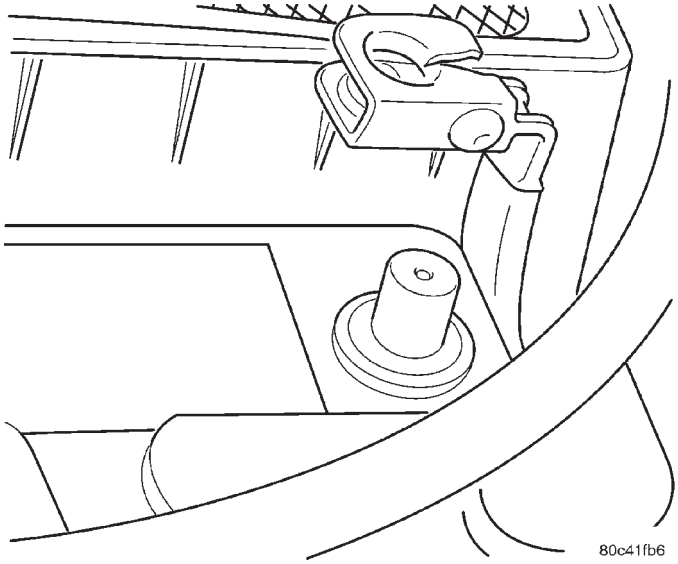

Fig. 1 Battery Negative Cable Remove/Install

(a) Remove the rear engine compartment seal at the cowl.

(b) Remove the three push retainers to the right side cowl cover and remove from vehicle.

(c) Remove the two push retainers to the left side cowl cover and remove from vehicle.

(7) Disconnect front windshield wiper motor posi-lock harness connector.

REMOVAL AND INSTALLATION (Continued)

(8) Remove three front windshield wiper module mounting bolts and remove module from vehicle (Fig. 2).

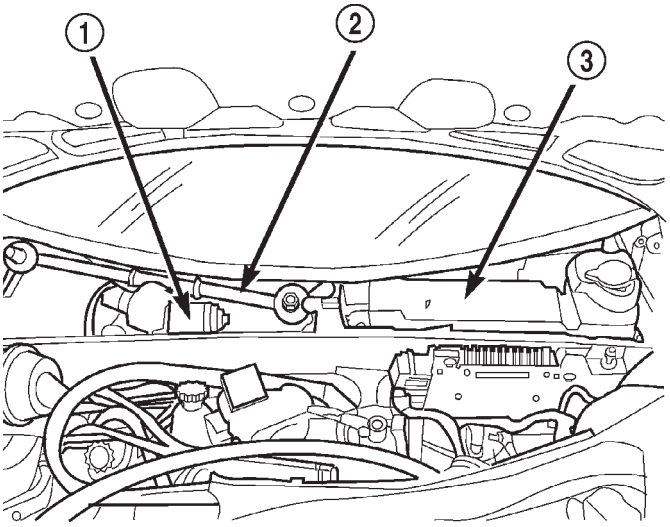

Fig. 2 Front Windshield Wiper Module Remove/ Install

1 – WIPER MOTOR
2 – WIPER MOTOR MODULE
3 – RESERVOIR

NOTE: If replacing the front windshield wiper module, the wiper motor must be transferred to the new module.

- **Remove the one bell crank retaining nut and remove bell crank.**
- **Remove three bolts to the front windshield wiper motor and separate from module.**

INSTALLATION

NOTE: If the front windshield wiper module was replaced, install the wiper motor on the new module.

- **Place the motor on the wiper module and install the three bolts to the front windshield wiper motor.**
- **Install the bell crank and one bell crank retaining nut.**

(1) Place the front windshield wiper module into cowl area and install the three mounting bolts (Fig. 2). Torque the mounting screws to 8 N·m (75 in. lbs.).

(2) Connect the front windshield wiper motor posi-lock harness connector.

(3) Install the cowl cover. The right side cover overlaps the left side cover.

(a) Place the left side cowl cover into position and install the two push retainers.

(b) Place the right side cowl cover into position and install the two push retainers.

(c) Install the rear engine compartment seal at the cowl.

Before installation of the front windshield wiper arms, activate the wiper system to ensure the wiper module is in the PARK position. Position wiper arms so that the heel of the blade(s) is on the park line on the windshield. Refer to Adjustments in this section for Wiper Arm Adjustment.

(4) Place the arm on the pivot while the arm is in an over/centered position.

(5) Install the wiper arm retaining nut and torque to 21 N·m (190 in. lbs.).

(6) Install the wiper arm nut cap.

(7) Connect the battery negative cable (Fig. 1).

(8) Close hood.

(9) Verify vehicle and system operation.

FRONT WINDSHIELD WIPER MOTOR - RHD

REMOVAL

To service the front windshield wiper motor, the front windshield wiper module must first be removed.

(1) Open hood.

(2) Disconnect and isolate the battery negative cable.

(3) Using a trim stick (special tool #C-4755) or equivalent, gently pry up on the wiper arm nut cap and remove.

(4) Remove wiper arm retaining nut.

(5) Remove the arm from the pivot using a rocking motion while the arm is in an over/centered position.

(6) Remove the cowl cover. The right side cover overlaps the left side cover, so they both must be removed.

(a) Remove the rear engine compartment seal at the cowl.

(b) Remove the three push retainers to the right side cowl cover and remove from vehicle.

(c) Remove the two push retainers to the left side cowl cover and remove from vehicle.

(7) Disconnect front windshield wiper motor posi-lock harness connector.

(8) Remove three front windshield wiper module mounting bolts (Fig. 3) and remove module from vehicle.

(9) Remove the one bell crank retaining nut and remove bell crank.

(10) Remove three bolts to the front windshield wiper motor and separate from module.

REMOVAL AND INSTALLATION (Continued)

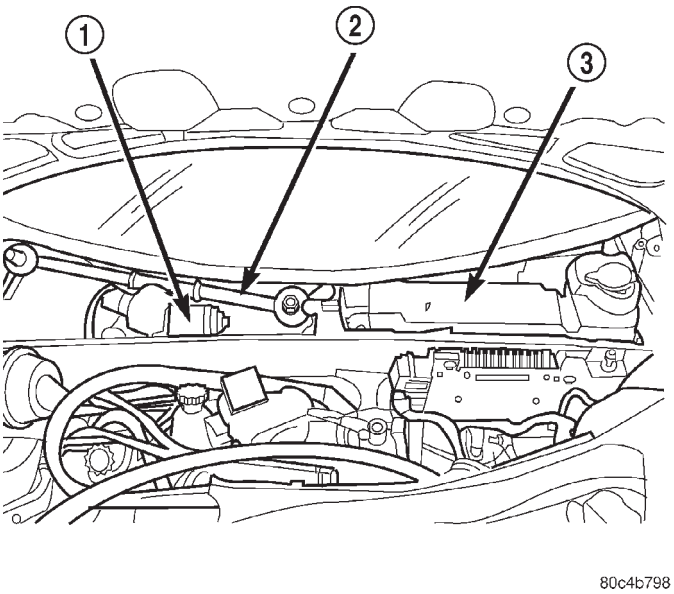

Fig. 3 Front Windshield Wiper Module Remove/ Install

1 – WIPER MOTOR
2 – WIPER MOTOR MODULE
3 – RESERVOIR

INSTALLATION

(1) Place the motor on the wiper module and install the three bolts to the front windshield wiper motor.

(2) Install the bell crank and one bell crank retaining nut.

(3) Place the front windshield wiper module into cowl area and install the three mounting bolts. Torque the mounting screws to 7 to 9 N·m (60 to 80 in. lbs.).

(4) Connect the front windshield wiper motor posi-lock harness connector.

(5) Install the cowl cover. The right side cover overlaps the left side cover.

(a) Place the left side cowl cover into position and install the two push retainers.

(b) Place the right side cowl cover into position and install the two push retainers.

(c) Install the rear engine compartment seal at the cowl.

Before installation of the front windshield wiper arms, activate the wiper system to ensure the wiper module is in the PARK position. Position wiper arms so that the heel of the blade(s) is on the park line on the windshield. Refer to Adjustments in this section for Wiper Arm Adjustment.

(6) Place the arm on the pivot while the arm is in an over/centered position.

(7) Install the wiper arm retaining nut.

(8) Install the wiper arm nut cap.

(9) Connect the battery negative cable.

(10) Close hood.

(11) Verify vehicle and system operation.

WINDSHIELD WASHER HOSE - RHD

REMOVAL

For damaged or plugged windshield washer hose, remove the affected piece of hose and replace with bulk hose. It may be necessary to de-trim parts of the interior to locate the problem portion of hose. Refer to (Fig. 4), and (Fig. 5) hose routing. Refer also to Body for interior component Removal and Installation.

INSTALLATION

Depending on how much of the vehicle has been de-trimmed, either splice in a small piece of hose or replace the entire length of affected hose. Verify vehicle and system operation upon reassembly.

WINDSHIELD WASHER PUMP - RHD

REMOVAL

(1) Open hood.

(2) Disconnect and isolate the battery negative cable.

(3) Using a trim stick (special tool #C-4755) or equivalent, gently pry up on the wiper arm nut cap and remove.

(4) Remove wiper arm retaining nut.

(5) Remove the arm from the pivot using a rocking motion while the arm is in an over/centered position.

(6) Remove the cowl cover. The right side cover overlaps the left side cover, so they both must be removed.

(a) Remove the rear engine compartment seal at the cowl.

(b) Remove the three push retainers to the right side cowl cover and remove from vehicle.

(7) Remove three reservoir retaining screws.

(8) Disconnect the pump wire connector.

(9) Disconnect the washer hose connections.

(10) Lift washer reservoir out of cowl area and drain into bucket.

(11) Gently pry pump away from reservoir and out of grommet. Care must be taken not to puncture reservoir.

(12) Remover rubber grommet from reservoir.

INSTALLATION

CAUTION: A new grommet must be used every time the pump is removed/installed from the reservoir to prevent possible leaks in the future.

(1) Install new grommet into the reservoir.

REMOVAL AND INSTALLATION (Continued)

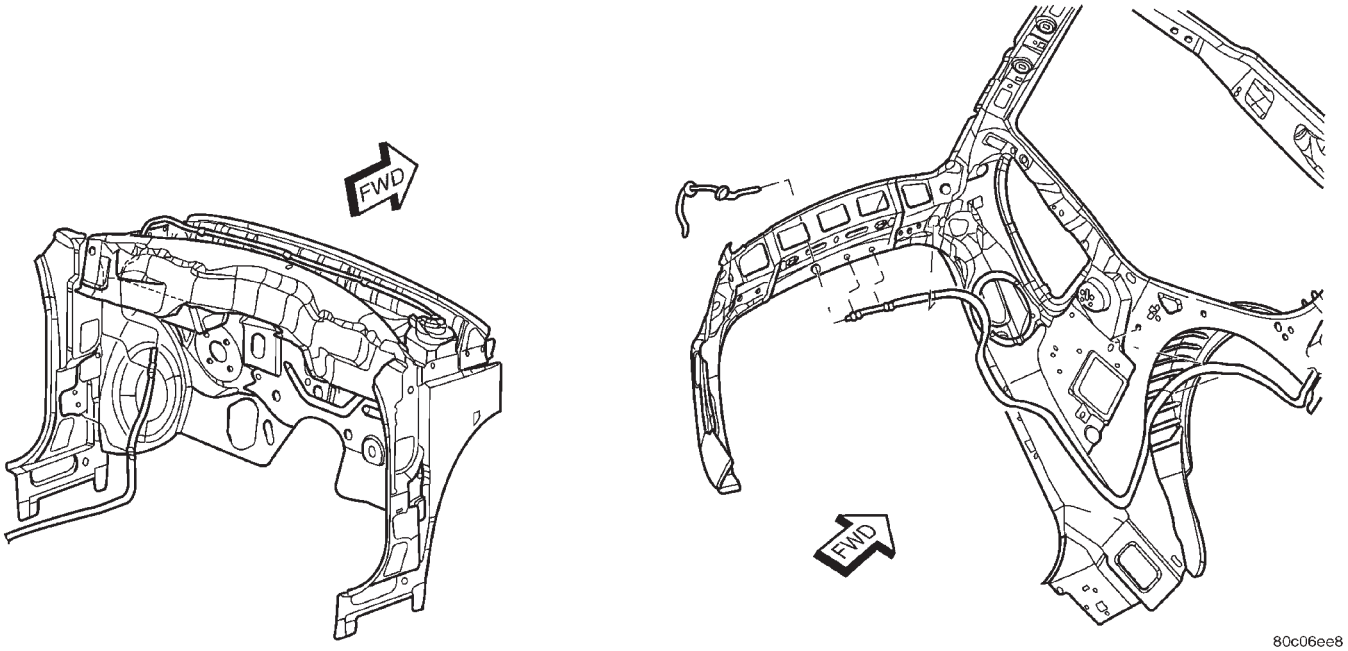

Fig. 4 Body Hose Routing

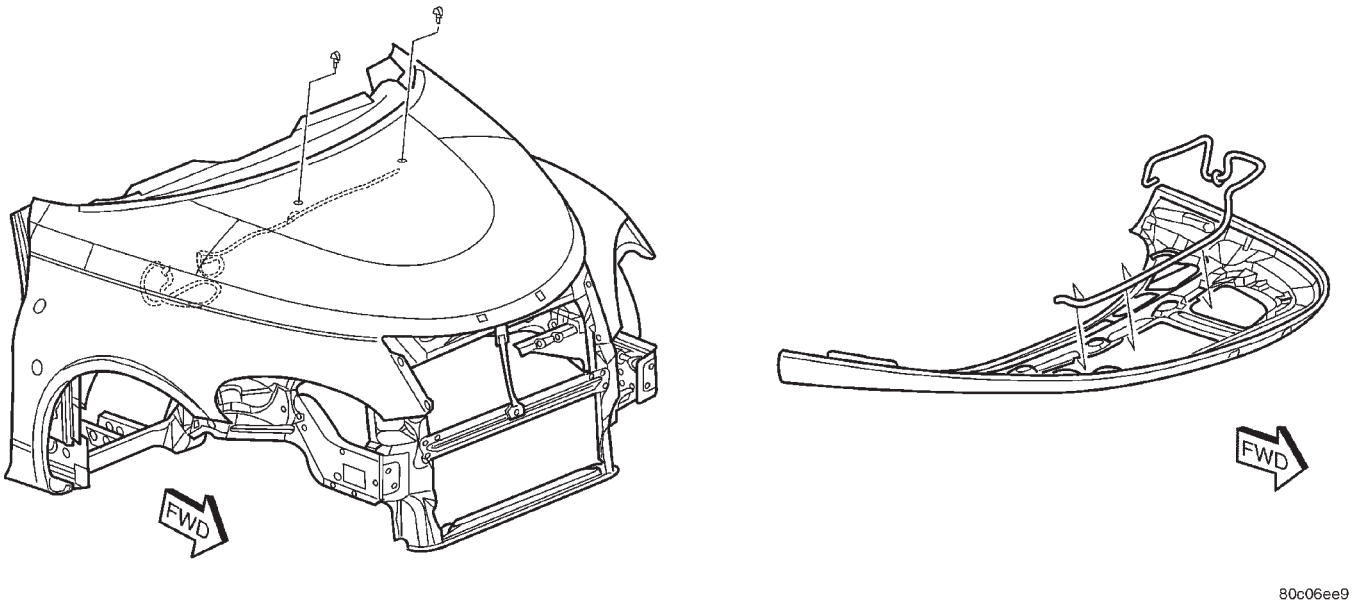

Fig. 5 Hood Hose Routing

(2) Insert pump into pump grommet and firmly snap into reservoir.

(3) Place reservoir into cowl area and connect the washer hoses.

NOTE: The hose with the white stripe goes on the white side of the pump and the black hose on the black side of the pump.

(4) Connect the pump wire connector.

(5) Install the three reservoir retaining screws. Torque screws to 8 N·m (70 in. lbs.).

(6) Install the cowl cover. The right side cover overlaps the left side cover.

(a) Place the right side cowl cover into position and install the two push retainers.

(b) Install the rear engine compartment seal at the cowl.

Before installation of the front windshield wiper arms, activate the wiper system to ensure the wiper

REMOVAL AND INSTALLATION (Continued)

module is in the PARK position. Position wiper arms so that the heel of the blade(s) is on the park line on the windshield. Refer to Adjustments in this section for Wiper Arm Adjustment.

(7) Place the arm on the pivot while the arm is in an over/centered position.

(8) Install the wiper arm retaining nut and torque to 21 N·m (190 in. lbs.).

(9) Install the wiper arm nut cap.

(10) Connect the battery negative cable.

(11) Close hood.

(12) Verify vehicle and system operation.

WINDSHIELD WASHER RESERVOIR

REMOVAL

(1) Open hood.

(2) Disconnect and isolate the battery negative cable.

(3) Using a trim stick (special tool #C-4755) or equivalent, gently pry up on the wiper arm nut cap and remove.

(4) Remove wiper arm retaining nut.

(5) Remove the arm from the pivot using a rocking motion while the arm is in an over/centered position.

(6) Remove the cowl cover. The right side cover overlaps the left side cover, so they both must be removed.

(a) Remove the rear engine compartment seal at the cowl.

(b) Remove the three push retainers to the right side cowl cover and remove from vehicle.

(7) Remove three reservoir retaining screws.

(8) Disconnect the pump wire connector.

(9) Disconnect the washer hose connections (Fig. 6).

(10) Lift washer reservoir out of cowl area and drain into bucket (Fig. 6).

NOTE: If replacing the washer reservoir, the washer pump must be transferred to the new reservoir. The new reservoir will come with a new washer pump grommet.

(11) Gently pry pump away from reservoir and out of grommet.

INSTALLATION

(1) Insert pump into pump grommet and firmly snap into reservoir.

(2) Place reservoir into cowl area and connect the washer hoses (Fig. 6).

NOTE: The hose with the white stripe goes on the white side of the pump and the black hose on the black side of the pump.

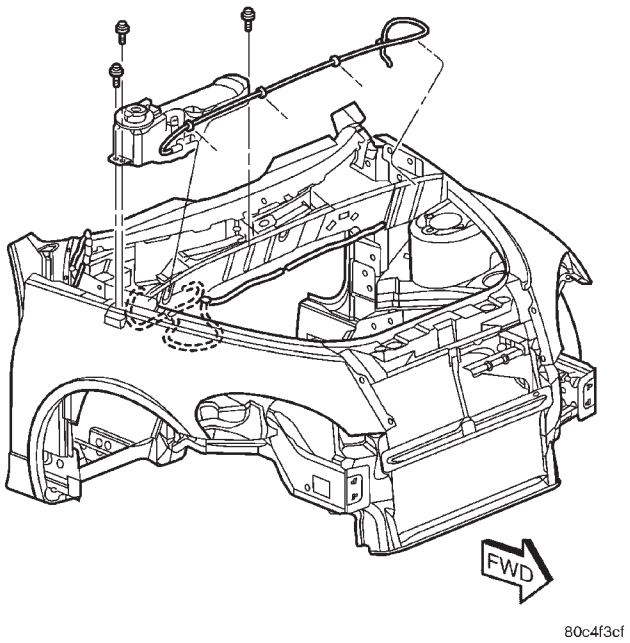

Fig. 6 Windshield Washer Reservoir Remove/Install (LHD Shown) RHD Symmetrically Opposite

(3) Connect the pump wire connector.

(4) Install the three reservoir retaining screws. Torque screws to 8 N·m (70 in. lbs.).

(5) Install the cowl cover. The right side cover overlaps the left side cover.

(a) Place the right side cowl cover into position and install the two push retainers.

(b) Install the rear engine compartment seal at the cowl.

Before installation of the front windshield wiper arms, activate the wiper system to ensure the wiper module is in the PARK position. Position wiper arms so that the heel of the blade(s) is on the park line on the windshield. Refer to Adjustments in this section for Wiper Arm Adjustment.

(6) Place the arm on the pivot while the arm is in an over/centered position.

(7) Install the wiper arm retaining nut and torque to 21 N·m (190 in. lbs.).

(8) Install the wiper arm nut cap.

(9) Connect the battery negative cable.

(10) Close hood.

(11) Verify vehicle and system operation.

ADJUSTMENTS

FRONT WINDSHIELD WIPER ARM(S) - RHD

(1) Open hood.

(2) Using a trim stick (special tool #C-4755) or equivalent, gently pry up on the wiper arm nut cap and remove.

ADJUSTMENTS (Continued)

(3) Remove wiper arm retaining nut.
(4) Remove the arm from the pivot using a rocking motion while the arm is in an over/centered position.
(5) The wiper blade heel should be parked within 5 mm of the park line. The park line is mark on the windshield (Fig. 7).

NOTE: In the event that the wiper blade tip excessively strikes the cowl screen due to long term normal wear, reposition the wiper blade heel slightly above the park line. Make sure that the wipers are in the PARK position.

(6) Place the arm on the pivot while the arm is in an over/centered position.
(7) Install the wiper arm retaining nut and torque to 21 N·m (190 in. lbs.).
(8) Install the wiper arm nut cap.
(9) Close hood.
(10) Verify system operation.

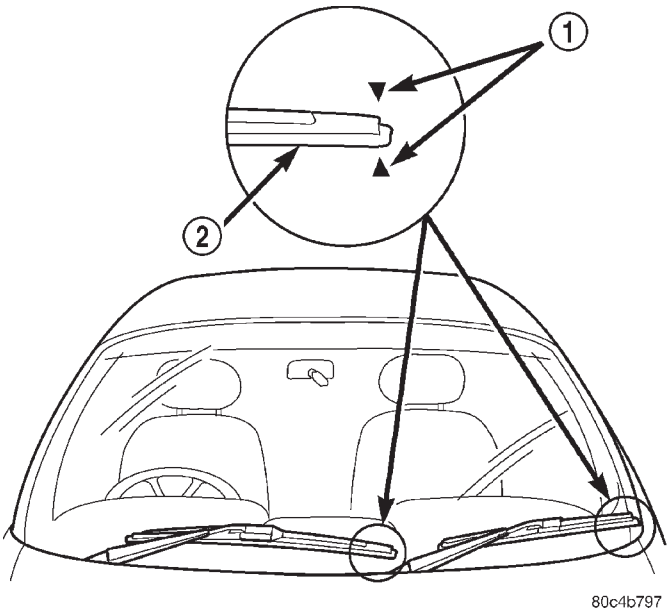

Fig. 7 Windshield Wiper Blade/Arm Park Lines
1 – ALIGNMENT ARROWS ON WINDSHIELD
2 – WIPER BLADE

LAMPS

TABLE OF CONTENTS

page

LAMP DIAGNOSIS 1
HEADLAMP ALIGNMENT 4
LAMP BULB SERVICE 7
LAMP SERVICE. 12
LAMP SYSTEMS. 18
BULB APPLICATION 19

LAMP DIAGNOSIS

TABLE OF CONTENTS

page

DESCRIPTION AND OPERATION
SAFETY PRECAUTIONS 1
DAYTIME RUNNING LAMP MODULE. 1
DIAGNOSIS AND TESTING
DIAGNOSTIC PROCEDURES 1
HEADLAMP DIAGNOSIS 1
FOG LAMP 3

DESCRIPTION AND OPERATION

SAFETY PRECAUTIONS

WARNING: EYE PROTECTION SHOULD BE USED WHEN SERVICING GLASS COMPONENTS. PERSONAL INJURY CAN RESULT.

CAUTION: Do not touch the glass of halogen bulbs with fingers or other possibly oily surface, reduced bulb life will result.

Do not use bulbs with higher candle power than indicated in the Bulb Application table at the end of this section. Damage to lamp and/or Daytime Running Lamp Module can result.

Do not use fuses, circuit breakers or relays having greater amperage value than indicated on the fuse panel or in the Owners Manual.

When it is necessary to remove components to service another, it should not be necessary to apply excessive force or bend a component to remove it. Before damaging a trim component, verify hidden fasteners or captured edges are not holding the component in place.

DAYTIME RUNNING LAMP MODULE

DESCRIPTION

Vehicles built for use in Canada are equipped with a Daytime Running Lamp (DRL) system. Turn signal lamp circuitry always comes from the multi-function switch, and goes to the cluster connector, into the cluster, then back out to the front turn signal switch lamps.

OPERATION

The Canadian cluster provides steady illumination of the front turn signal when the ignition switch is in the ON position. The DRL function may be inhibited by activating the turn signals, the hazard flashers, the headlamp switch, or park brake.

DIAGNOSIS AND TESTING

DIAGNOSTIC PROCEDURES

When a vehicle experiences problems with the headlamp system, verify the condition of the battery connections, fuses, charging system, headlamp bulbs, wire connectors, relay, high beam switch, dimmer switch, and headlamp switch. Refer to Wiring Diagrams for component locations and circuit information.

HEADLAMP DIAGNOSIS

Always begin any diagnosis by testing all of the fuses and circuit breakers in the system. Refer to Wiring Diagrams.

DIAGNOSIS AND TESTING (Continued)

CONDITION	POSSIBLE CAUSES	CORRECTION
HEADLAMPS ARE DIM WITH ENGINE IDLING OR IGNITION TURNED OFF	1. Loose or corroded battery cables.	1. Clean and secure battery cable clamps and posts.
	2. Loose or worn generator drive belt.	2. Adjust or replace generator drive belt.
	3. Charging system output too low.	3. Test and repair charging system, refer to Charging System
	4. Battery has insufficient charge.	4. Test battery state - of - charge, refer to Battery
	5. Battery is sulfated or shorted.	5. Load test battery, refer to Battery.
	6. Poor lighting circuit Z1 - ground.	6. Test for voltage drop across Z1 - ground locations, refer to Wiring Diagrams.
	7. Both headlamp bulbs defective.	7. Replace both headlamp bulbs.
HEADLAMP BULBS BURN OUT FREQUENTLY	1. Charging system output too high.	1. Test and repair charging system, refer to Charging System
	2. Loose or corroded terminals or splices in circuit.	2. Inspect and repair all connectors and splices, refer to Wiring Diagrams.
HEADLAMPS ARE DIM WITH ENGINE RUNNING EVEN ABOVE IDLE*	1. Charging system output too low.	1. Test and repair charging system, refer to Charging Systems.
	2. Poor lighting circuit Z1 - ground.	2. Test for voltage drop across Z1 - ground locations, refer to Wiring Diagrams.
	3. High resistance in headlamp circuit.	3. Test amperage draw of headlamp circuit.
	4. Both headlamp bulbs defective.	4. Replace both headlamp bulbs.
HEADLAMPS FLASH RANDOMLY	1. Poor lighting circuit Z1 - ground.	1. Test for voltage drop across Z1 - ground locations, refer to Wiring Diagrams.
	2. High resistance in headlamp circuit.	2. Test amperage draw of headlamp circuit. Should not exceed 30 amps.
	3. Faulty headlamps switch circuit breaker.	3. Replace headlamp switch
	4. Loose or corroded terminals or splices in circuit.	4. Inspect and repair all connectors and splices, refer to Wiring Diagrams.
HEADLAMPS DO NOT ILLUMINATE	1. No voltage to headlamps.	1. Repair open headlamp circuit, refer to Wiring Diagrams.
	2. No Z1 - ground at headlamps.	2. Repair circuit ground, refer to Wiring Diagrams.
	3. Faulty headlamp switch.	3. Replace headlamp switch.
	4. Faulty headlamp dimmer (multi-function) switch.	4. Replace multi-function switch.
	5. Broken connector terminal or wire splice in headlamp circuit.	5. Repair connector terminal or wire splice.
(DRL EQUIPPED VEHICLES) HEADLAMPS STAY ON WITH KEY REMOVED	Failed DRL module	Replace DRL module
*Canada vehicles must have lamps ON.		

DIAGNOSIS AND TESTING (Continued)

FOG LAMP

FOG LAMP DIAGNOSIS

CONDITION	POSSIBLE CAUSES	CORRECTION
FOG LAMPS ARE DIM WITH ENGINE IDLING OR IGNITION TURNED OFF.	1. Loose or corroded battery cables.	1. Clean and secure battery cable clamps and posts.
	2. Loose or worn generator drive belt.	2. Adjust or replace generator drive belt.
	3. Charging system output too low.	3. Test and repair charging system. Refer to Charging System.
	4. Battery has insufficient charge.	4. Test battery state - of - charge. Refer to Battery.
	5. Battery is sulfated or shorted.	5. Load test battery. Refer to Battery.
	6. Poor lighting circuit Z1-ground.	6. Test for voltage drop across Z1-ground locations. Refer to Wiring Diagnosis.
FOG LAMP BULBS BURN OUT FREQUENTLY	1. Charging system output too high.	1. Test and repair charging system. Refer to Charging System.
	2. Loose or corroded terminals or splices in circuit.	2. Inspect and repair all connectors and splices. Refer to Wiring Diagnosis.
FOG LAMPS ARE DIM WITH ENGINE RUNNING ABOVE IDLE	1. Charging system output too low.	1. Test and repair charging system. Refer to Charging System.
	2. Poor lighting circuit Z1-ground.	2. Test for voltage drop across Z1-ground locations. Refer to Wiring Diagnosis.
	3. High resistance in fog lamp circuit.	3. Test amperage draw of fog lamp circuit.
FOG LAMPS FLASH RANDOMLY	1. Poor lighting circuit Z1-ground.	1. Test for voltage drop across Wiring Diagnosis.
	2. High resistance in fog lamp circuit.	2. Test amperage draw of fog lamp circuit.
	3. Faulty fog lamp switch.	3. Replace fog lamp switch.
	4. Loose or corroded terminals or splices in circuit.	4. Inspect and repair all connectors and splices. Refer to Wiring Diagnosis.
FOG LAMPS DO NOT ILLUMINATE	1. Blown fuse for fog lamp.	1. Replace fuse. Refer to Wiring Diagnosis.
	2. No Z1-ground at fog lamps.	2. Repair circuit ground. Refer to Wiring Diagnosis.
	3. Faulty fog lamp switch.	3. Replace fog lamp switch.
	4. Broken connector terminal or wire splice in fog lamp circuit.	4. Repair connector terminal or wire splice.
	5. Defective or burned out bulb.	5. Replace bulb.

HEADLAMP ALIGNMENT

TABLE OF CONTENTS

page

DESCRIPTION AND OPERATION
HEADLAMP ALIGNMENT 4
SERVICE PROCEDURES
HEADLAMP ALIGNMENT PREPARATION. 4

page

ADJUSTMENTS
HEADLAMP ADJUSTMENT USING ALIGNMENT SCREEN. 4
FOG LAMP ALIGNMENT 6

DESCRIPTION AND OPERATION

HEADLAMP ALIGNMENT

Headlamps and Fog Lamps should be aligned using the screen method which is provided in this section.

SERVICE PROCEDURES

HEADLAMP ALIGNMENT PREPARATION

(1) Verify headlamp dimmer switch and high beam indicator operation.

(2) Inspect and correct damaged or defective components that could interfere with proper headlamp alignment.

(3) Verify proper tire inflation.

(4) Clean headlamp lenses.

(5) Verify that luggage area is not loaded.

(6) Fuel tank should be FULL. Add 2.94 kg (6.5 lbs.) of weight over the fuel tank for each estimated gallon of missing fuel.

ADJUSTMENTS

HEADLAMP ADJUSTMENT USING ALIGNMENT SCREEN

ALIGNMENT SCREEN PREPARATION

(1) Position vehicle on a level surface perpendicular to a flat wall 7.62 meters (25 ft.) away from front of headlamp lens.

(2) If necessary, tape a line on the floor 7.62 meters (25 ft.) away from and parallel to the wall (Fig. 1).

(3) From the floor up 65.8 Centimeters (26 in.), tape a line on the wall at the center line of the vehicle. Sight along the center line of the vehicle (from rear of vehicle forward) to verify accuracy of the line placement.

(4) Rock vehicle side-to-side three times to allow suspension to stabilize.

(5) Jounce front suspension three times by pushing downward on front bumper and releasing.

(6) A small dot is molded into each headlamp lens signifying the center of the low-beam headlamp. Measure the distance from the center of the headlamp to the floor. Transfer measurement to the alignment screen (with tape). Use this line for up/down adjustment reference.

HEADLAMP ADJUSTMENT

The headlamp low beam pattern has a distinct horizontal cutoff line which is used to visually align the headlamps. A properly aimed headlamp will have the top of the horizontal cut off line of the low beam pattern aligned with the horizontal line on the wall (Fig. 1). The high beams on a vehicle with aero headlamps cannot be aligned. The high beam pattern should be correct when the low beams are aligned properly.

To adjust headlamp alignment, rotate alignment screw to achieve the specified low beam hot spot pattern.

ADJUSTMENTS (Continued)

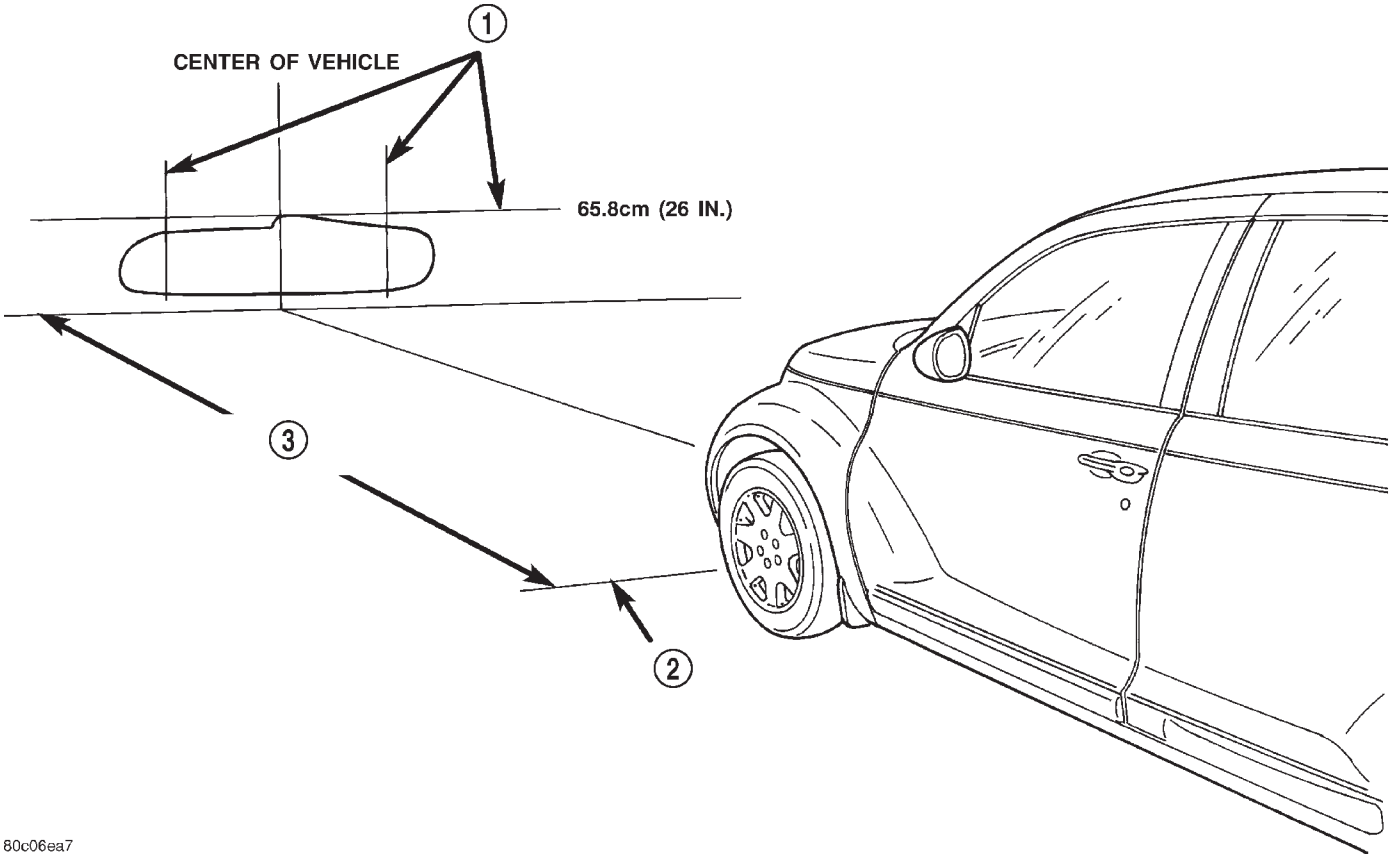

Fig. 1 Headlamp Alignment Screen

1 – CENTER OF HEADLAMPS
2 – FRONT OF HEADLAMP
3 – 7.62 METERS (25 FT.)

ADJUSTMENTS (Continued)

FOG LAMP ALIGNMENT

Prepare an alignment screen. Refer to Alignment Screen Preparation paragraph in this section. Turn on the headlamp switch tot he parking lamps only position and actuate the fog lamp switch. A properly aligned fog lamp will project a pattern on the alignment screen with the top of the cut–off line 10 cm (4 in.) below the fog lamp center line and straight ahead

To adjust fog lamp alignment, rotate the alignment screw located on the side of the fog lamp from the cooling opening in the fascia, just inboard of the fog lamp opening, to achieve the specified pattern position. (Fig. 2).

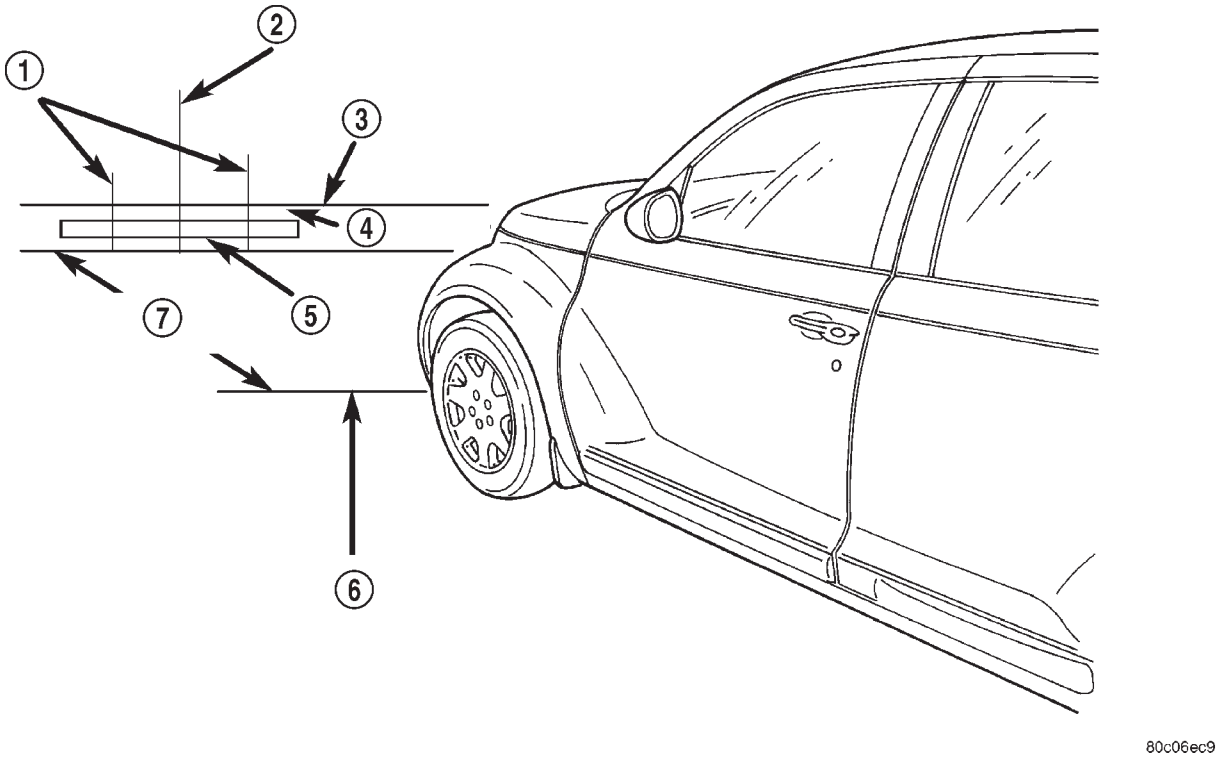

Fig. 2 Lamp Alignment Screen

1 – CENTER LINE OF FOG LAMPS
2 – CENTER LINE OF VEHICLE
3 – FLOOR TO CENTER OF FOG LAMP
4 – 10cm (4 IN.)
5 – FOG LAMP HOT SPOT
6 – FRONT OF FOG LAMP
7 – 7.62 METERS (25 FT.)

LAMP BULB SERVICE

TABLE OF CONTENTS

page

DESCRIPTION AND OPERATION
BULB 7
REMOVAL AND INSTALLATION
HEADLAMP BULB 7
FOG LAMP BULB 8
FRONT SIDE MARKER/PARK/TURN SIGNAL LAMP BULB 8
CENTER HIGH MOUNTED STOP LAMP BULB . . 8
TAIL, STOP, BACK-UP AND TURN SIGNAL LAMP BULB 8
BACK UP LAMP BULB 9
LICENSE PLATE LAMP BULB 9
FLOOR TRANSMISSION RANGE INDICATOR LAMP 9
CONSOLE FLOOD LAMP 10
REAR CARGO LAMP BULB 11
DOME LAMP BULB 11
VISOR VANITY LAMP BULB 11

DESCRIPTION AND OPERATION

BULB

DESCRIPTION

The electric light bulb is a source of electromagnetic radiation which generates light. Vehicles use many different types of bulbs:

- Headlamp bulb
- Fog Lamp bulb
- Tail Lamp bulb
- Stop Lamp bulb
- Center High Mounted Stop Lamp bulb (CHMSL)
- Turn Signal bulb
- Back Up Lamp bulb
- Dome Lamp bulb
- Transaxle Range Indicator Lamp bulb (PRNDL)
- Rear Cargo Lamp bulb
- Visor Vanity Lamp bulb
- Etc.

REMOVAL AND INSTALLATION

HEADLAMP BULB

REMOVAL

(1) Remove headlamp access cover in splash shield (Fig. 1).

(2) Rotate socket counterclockwise one quarter turn.

(3) Remove bulb and socket from headlamp housing.

(4) Disconnect wire connector from back of headlamp high or low beam bulb.

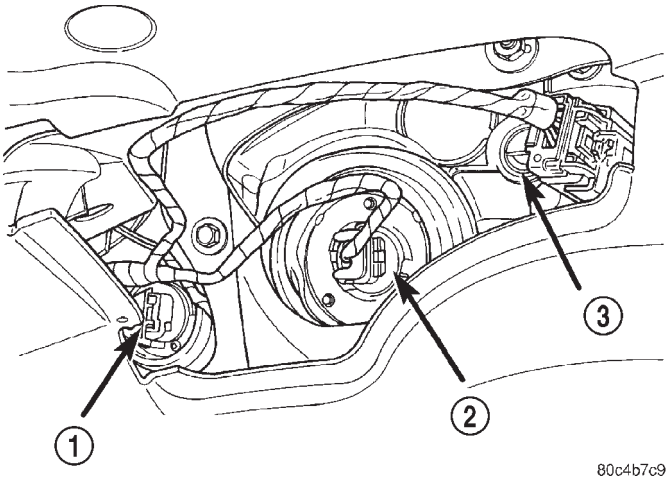

Fig. 1 Headlamp Bulb Access

1 – HIGH BEAM LAMP
2 – LOW BEAM LAMP
3 – PARK/TURN SIGNAL LAMP

INSTALLATION

CAUTION: Do not touch the glass of halogen bulbs with fingers or other possibly oily surface, reduced bulb life will result.

(1) Connect wire connector to the back of headlamp high or low beam bulb.

(2) Install bulb into headlamp housing (Fig. 1)

(3) Rotate socket clockwise one quarter turn.

(4) Test operation of lamps.

(5) Install headlamp access cover into splash shield.

REMOVAL AND INSTALLATION (Continued)

FOG LAMP BULB

REMOVAL

(1) Reach behind the lower splash shield to gain access to the rear of the fog lamp (Fig. 2).
(2) Disconnect wire connector from fog lamp.
(3) Remove bulb from lamp.

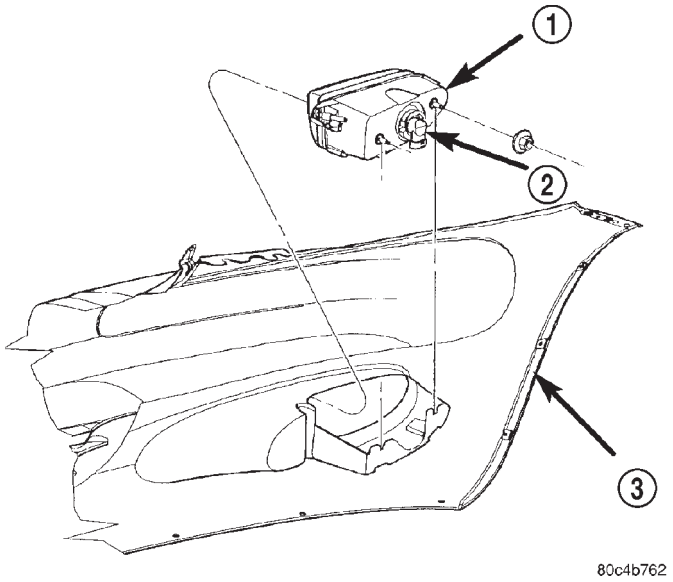

Fig. 2 Fog Lamp

1 – FOG LAMP ADAPTER
2 – FOG LAMP BULB
3 – FRONT FASCIA

INSTALLATION

CAUTION: Do not touch the glass of halogen bulbs with fingers or other possibly oily surface, reduced bulb life will result.

(1) Install bulb into lamp (Fig. 2).
(2) Connect wire connector to the fog lamp.
Test operation of lamp.
(3) Install splash shield attaching fasteners.

FRONT SIDE MARKER/PARK/TURN SIGNAL LAMP BULB

REMOVAL

(1) Remove headlamp access cover in splash shield (Fig. 3).
(2) Rotate socket counterclockwise one quarter turn.
(3) Remove bulb and socket from headlamp housing.
(4) Disconnect wire connector from back of front side marker/park/turn signal lamp bulb.

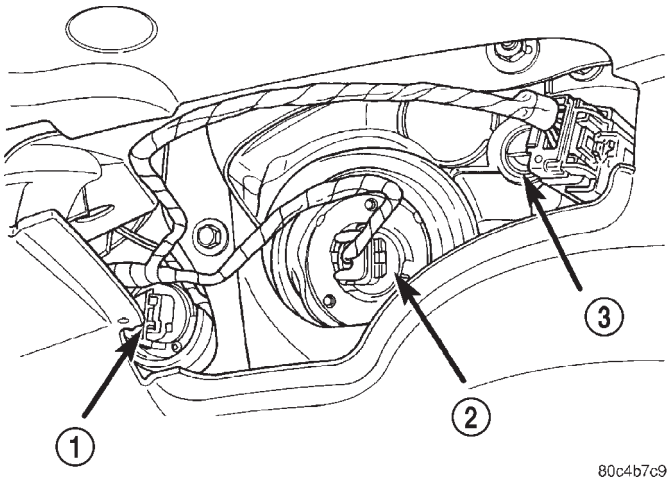

Fig. 3 Headlamp Bulb Access

1 – HIGH BEAM LAMP
2 – LOW BEAM LAMP
3 – PARK/TURN SIGNAL LAMP

INSTALLATION

(1) Connect wire connector to the back of front side marker/park/turn signal lamp bulb.
(2) Install bulb into headlamp housing (Fig. 3)
(3) Rotate socket clockwise one quarter turn.
(4) Test operation of lamps.
(5) Install headlamp access cover into splash shield.

CENTER HIGH MOUNTED STOP LAMP BULB

REMOVAL

(1) Open liftgate.
(2) Remove liftgate CHMSL cover (Fig. 4).
(3) Unsnap and remove the CHMSL lens from the lamp housing.
(4) Pull bulb(s) from the lamp housing.

INSTALLATION

(1) Install bulb(s) into the lamp housing (Fig. 4).
(2) Snap the CHMSL lens onto the lamp housing.
(3) Test operation of lamps.
(4) Install liftgate CHMSL cover.
(5) Close liftgate.

TAIL, STOP, BACK-UP AND TURN SIGNAL LAMP BULB

REMOVAL

(1) Remove screw attaching tail lamp assembly to the aperture panel (Fig. 5).
(2) Slide the lamp assembly down in the sheet metal opening.
(3) Remove the lamp assembly from vehicle.
(4) Remove bulb socket(s) from tail lamp housing.
(5) Pull bulb(s) from socket(s).

REMOVAL AND INSTALLATION (Continued)

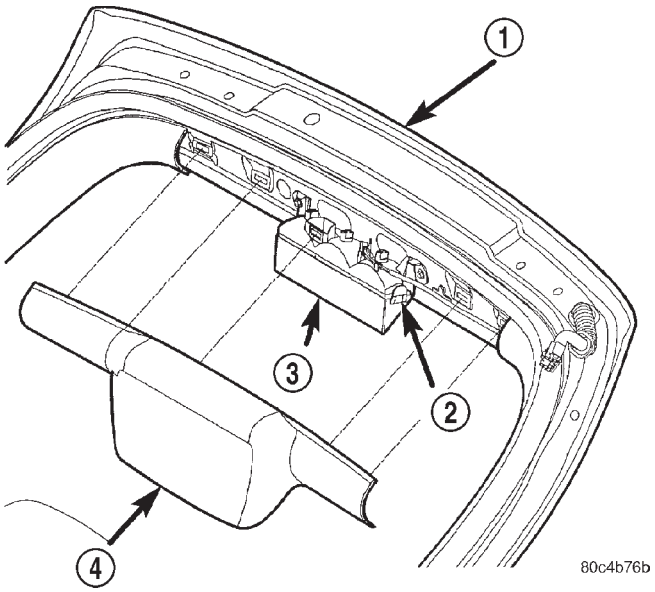

Fig. 4 Liftgate CHMSL Cover and Lamp

1 – LIFTGATE
2 – SNAP
3 – CHMSL LAMP
4 – CHMSL COVER

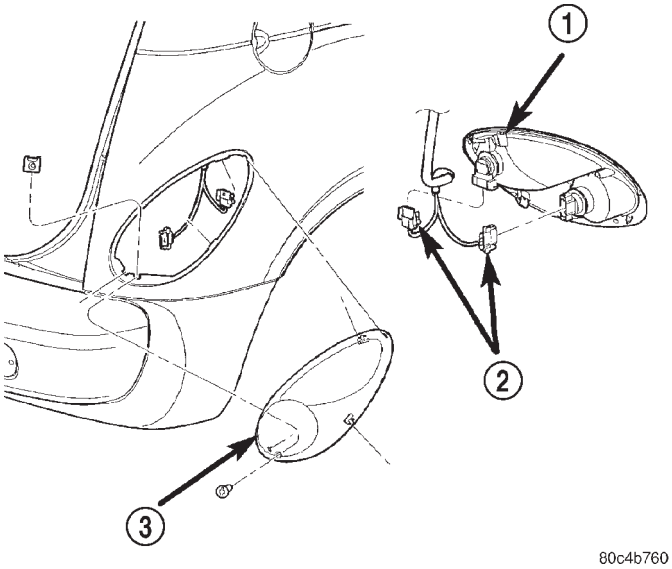

Fig. 5 Tail and Stop Lamp Bulb

1 – TAIL LAMP HOUSING
2 – WIRE CONNECTORS
3 – BOTTOM LOCATOR

INSTALLATION

(1) Push bul(s) into the bulb socket(s).

(2) Install bulb socket(s) into tail lamp assembly (Fig. 5). Rotate the socket clockwise until fully seated.

(3) Test operation of lamps.

(4) Align the tail lamp assembly to the sheet metal opening.

(5) Insert the lower positioning tab into the slot and then rotate the lamp forward until the retaining clips snap into position.

(6) Slide the lamp assembly upwards within the opening.

(7) Install tail lamp attaching screw.

BACK UP LAMP BULB

REMOVAL

(1) Remove screws attaching the back up lamp assembly to the fascia (Fig. 6).

(2) Remove lamp assembly.

(3) Remove socket from housing.

(4) Pull bulb from socket

INSTALLATION

(1) Push bulb into socket (Fig. 6).

(2) Install socket into the housing. Rotate the socket clockwise until fully seated.

(3) Test lamp operation

(4) Install screws attaching back up lamp to fascia.

LICENSE PLATE LAMP BULB

REMOVAL

(1) Remove screws attaching license plate lamp to rear bumper (Fig. 7).

(2) Remove lamp from bumper.

(3) Remove bulb socket from lamp housing.

(4) Pull bulb from socket.

INSTALLATION

(1) Install bulb into socket (Fig. 7).

(2) Install bulb socket into lamp.

(3) Place lamp in position.

(4) Install screws attaching license plate lamp to rear bumper.

FLOOR TRANSMISSION RANGE INDICATOR LAMP

REMOVAL

(1) Remove gear shift knob. Refer to Transmissions for proper procedure.

(2) Remove floor console.

(3) Disconnect socket from transaxle range indicator (Fig. 8).

(4) Remove bulb from socket.

INSTALLATION

(1) Push bulb into socket (Fig. 8).

(2) Snap socket into position.

(3) Install floor console into position.

(4) Install gear shift knob. Refer to Transmission for proper procedure.

REMOVAL AND INSTALLATION (Continued)

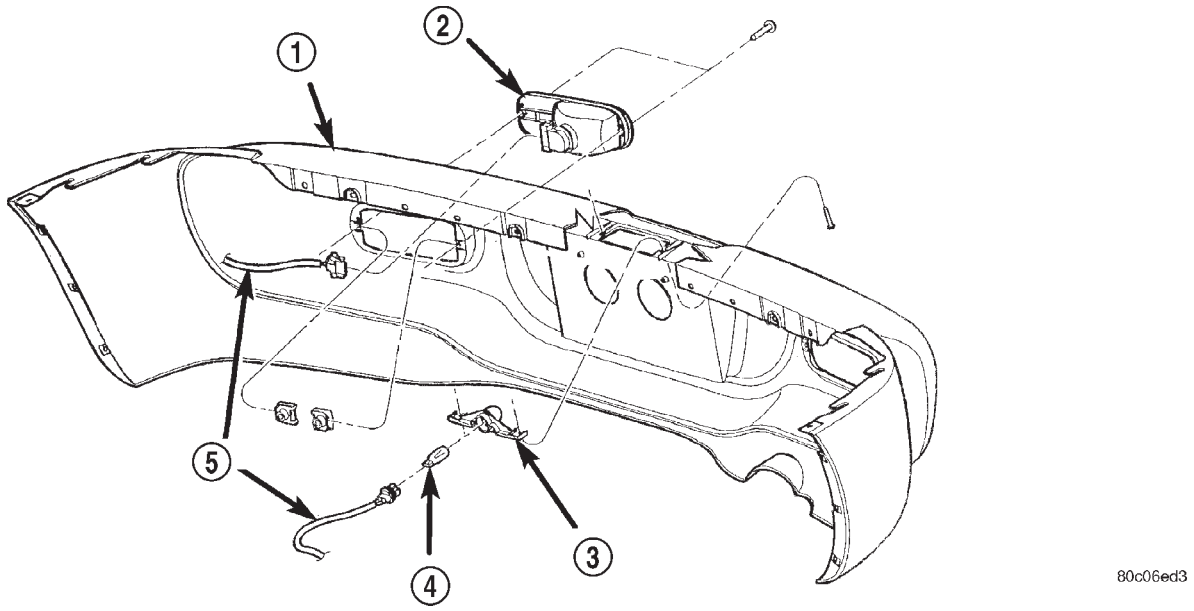

Fig. 6 Back Up Lamp

1 – REAR FASCIA
2 – BACKUP LAMP ASSY.
3 – LICENSE PLATE LAMP
4 – BULB
5 – CONNECTOR

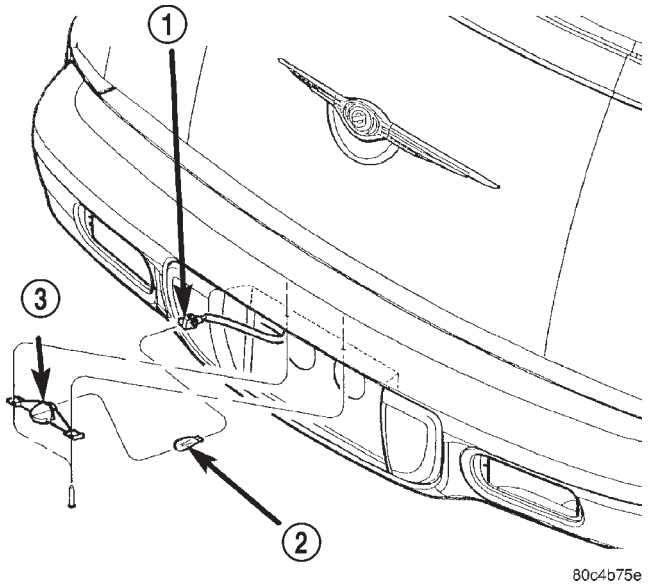

Fig. 7 License Plate Lamp

1 – CONNECTOR
2 – BULB
3 – LICENSE PLATE LAMP

CONSOLE FLOOD LAMP

REMOVAL

(1) Using a flat blade tool, remove console flood lamp from the lower center console (Fig. 9).

(2) Disconnect wire connector.

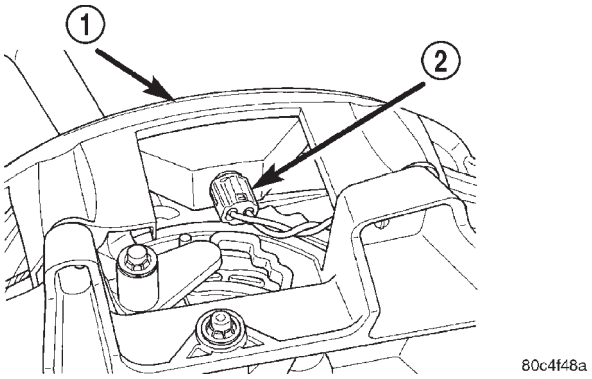

Fig. 8 Transmission Range Indicator

1 – TRANSMISSION RANGE INDICATOR
2 – TRANSMISSION RANGE INDICATOR LAMP BULB AND SOCKET

(3) Remove console flood lamp housing.

INSTALLATION

(1) Place console flood lamp housing near opening and connect the wire connector (Fig. 9).

(2) Test lamp.

(3) Place console flood lamp into position and apply hand pressure to snap lamp into position.

REMOVAL AND INSTALLATION (Continued)

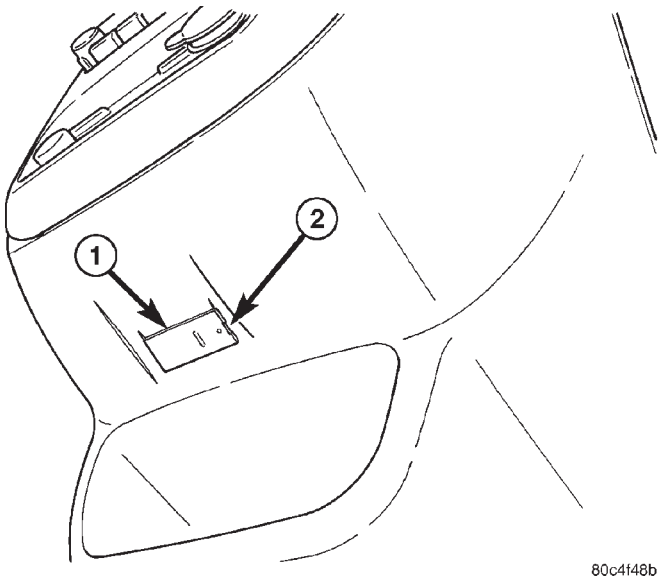

Fig. 9 Lower Center Console

1 – CONSOLE FLOOD LAMP
2 – INSERT SMALL FLAT TOOL

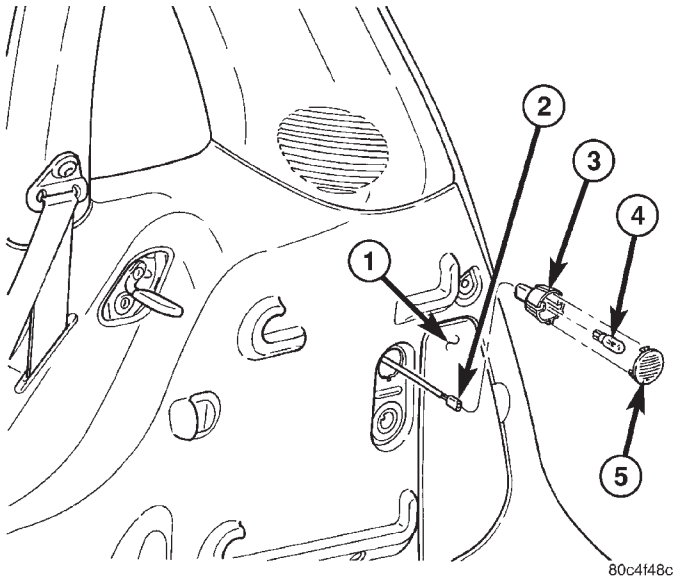

Fig. 10 Cargo Lamp

1 – JACK STORAGE AREA
2 – WIRE CONNECTOR
3 – CARGO LAMP HOUSING
4 – BULB
5 – LENS

REAR CARGO LAMP BULB

REMOVAL

(1) Open liftgate.
(2) Remove jack storage door from right rear quarter trim panel.
(3) Remove jack and tool bag.
(4) Place right hand on stem of cargo lamp housing and pull downward until lens separates from the lamp housing (Fig. 10).
(5) Pull cargo lamp housing through jack storage door opening to access bulb.
(6) Disconnect wire connector from cargo lamp housing.
(7) Pull bulb from housing socket.

INSTALLATION

(1) Push bulb into housing socket (Fig. 10).
(2) Snap lens onto lamp housing.
(3) Move wire connector through lamp opening and connect wire connector to cargo lamp housing.
(4) Place cargo lamp housing into opening and apply hand pressure to seat lamp housing into rear quarter panel.
(5) Install jack and tool bag in the storage area.
(6) Install jack storage door to the right rear quarter trim panel.
(7) Close liftgate.

DOME LAMP BULB

REMOVAL

(1) Insert a trim stick between the dome lamp bezel and dome lamp lens.
(2) Carefully swing down one side the lamp lens.
(3) Remove bulb from lamp socket.

INSTALLATION

(1) Push bulb in socket and snap into place.
(2) Position lens on lamp and snap into place.

VISOR VANITY LAMP BULB

REMOVAL

(1) Lower visor.
(2) Insert a small flat bladed tool into the slot between the lamp lens and lamp.
(3) Carefully pry lens outward.
(4) Remove bulb from socket.

INSTALLATION

(1) Position bulb in socket and push into place.
(2) Position lens on lamp and snap into place.

LAMP SERVICE

TABLE OF CONTENTS

page

DESCRIPTION AND OPERATION
LAMP ASSEMBLIES 12
REMOVAL AND INSTALLATION
HEADLAMP MODULE 12
FOG LAMP 14
FRONT SIDE MARKER/PARK/TURN SIGNAL LAMP HOUSING 14
CENTER HIGH MOUNTED STOP LAMP (CHMSL) 14
TAIL, STOP AND TURN SIGNAL LAMP 15
BACK UP LAMP 15
LICENSE PLATE LAMP 15
CONSOLE FLOOD LAMP BULB 16
REAR CARGO LAMP 17
DOME LAMP 17
VISOR VANITY LAMP 17

DESCRIPTION AND OPERATION

LAMP ASSEMBLIES

DESCRIPTION

The lamp assemblies or modules generally consist of a housing, reflector(s) and lens that directs a light source. Vehicles use many different types of lamps:

- Headlamp
- Fog Lamp
- Tail Lamp
- Stop Lamp
- Turn Signal Lamp
- Back up Lamp
- Dome Lamp
- Transaxle Range Indicator Lamp (PRNDL)
- Rear Cargo Lamp
- Visor Vanity Lamp
- Underhood Lamp
- etc.

REMOVAL AND INSTALLATION

HEADLAMP MODULE

REMOVAL

(1) Raise vehicle on a hoist.
(2) Remove wheel and tire.
(3) Remove splash shield as necessary to access headlamp housing.
(4) Remove grille.
(5) Remove the two fascia bolts from behind the grille (Fig. 1) and (Fig. 2).
(6) Remove fasteners attaching fender to fascia on the side being worked on.
(7) Remove the three fasteners holding the lower fascia to the lower radiator crossmember.
(8) Remove four nuts attaching headlamp housing (Fig. 3).
(9) Remove headlamp housing by lowering the fascia as necessary (Fig. 4) and (Fig. 5).
(10) Disconnect wire connector.

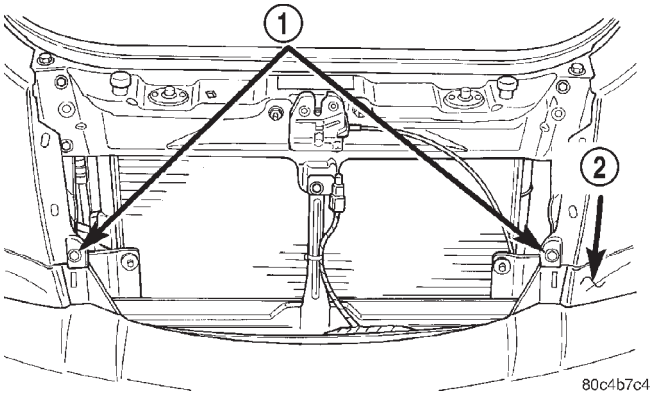

Fig. 1 Fascia Center Attaching Point

1 – ATTACHING POINTS
2 – FRONT FASCIA

INSTALLATION

CAUTION: Do not touch the glass of halogen bulbs with fingers or other possibly oily surface, reduced bulb life will result.

(1) Connect wire connectors to the back of headlamp housing.
(2) Place headlamp housing in to position, lower fascia as necessary to install headlamp housing in to position (Fig. 5) and (Fig. 4).
(3) Install nut(s) attaching headlamp housing (Fig. 3).
(4) Test lamp operation.
(5) Install fasteners attaching fender to fascia on the side being work on.

REMOVAL AND INSTALLATION (Continued)

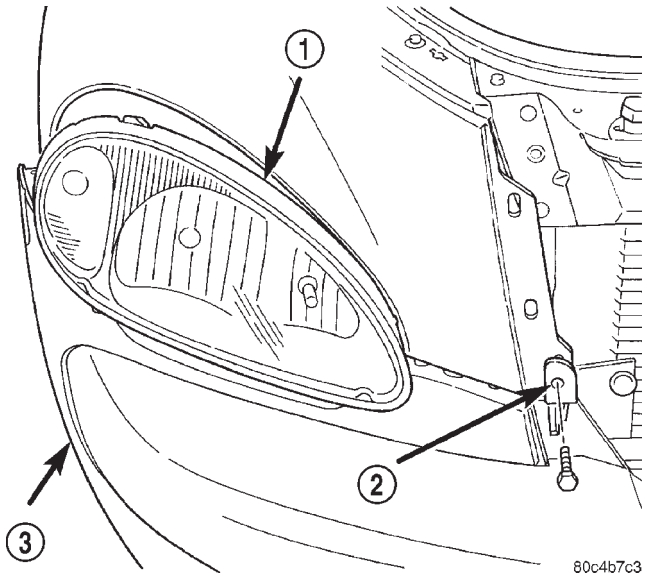

Fig. 2 Loosening The Fascia

1 – HEADLAMP HOUSING
2 – ATTACHING POINT
3 – FRONT FASCIA

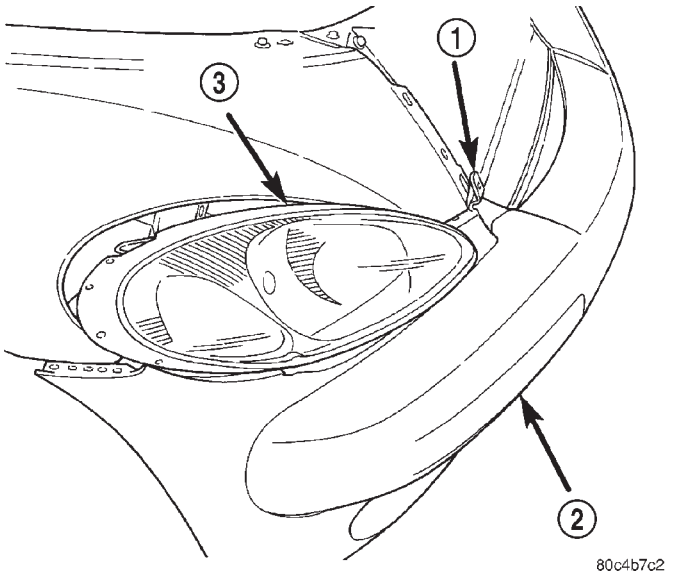

Fig. 4 Headlamp Removal

1 – FASCIA FASTENER
2 – FRONT FASCIA
3 – HEADLAMP HOUSING

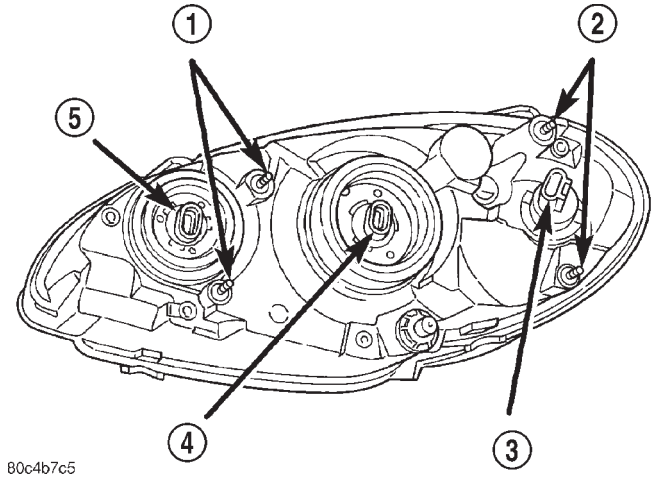

Fig. 3 Headlamp Housing

1 – ATTACHING STUDS
2 – ATTACHING STUDS
3 – FRONT SIDE MARKER/TURN SIGNAL LAMP BULB
4 – LOW BEAM LAMP
5 – HIGH BEAM LAMP

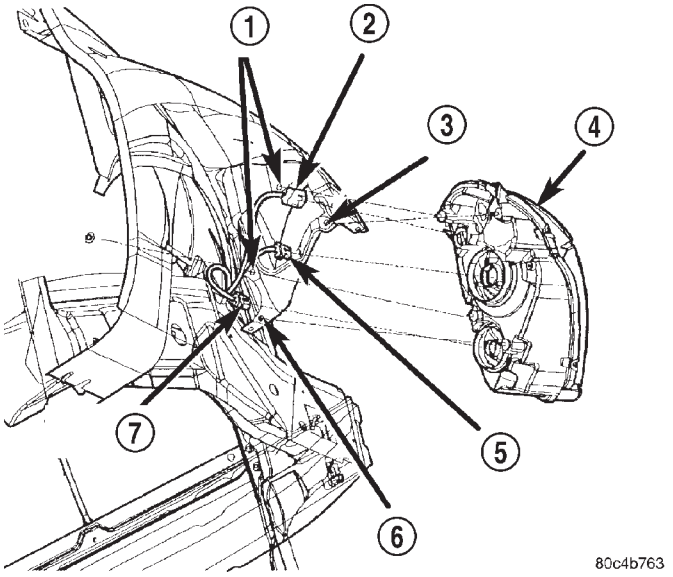

Fig. 5 Headlamp Removed

1 – MOUNTING HOLES
2 – FRONT SIDE MARKER/PARK/TURN SIGNAL LAMP
3 – MOUNTING HOLES
4 – HEADLAMP HOUSING
5 – LOW BEAM CONNECTOR
6 – MOUNTING HOLE
7 – HIGH BEAM CONNECTOR

(6) Install the two fascia bolts from behind the grille (Fig. 1) and (Fig. 2).

(7) Install three fasteners to hold the lower fascia to the lower radiator crossmember.

(8) Install grille.

(9) Install splash shield as necessary to access headlamp housing.

(10) Install wheel and tire.

(11) Lower vehicle.

REMOVAL AND INSTALLATION (Continued)

FOG LAMP

REMOVAL

(1) Remove fasteners attaching lower splash shield to gain access to the rear of the fog lamp (Fig. 6).
(2) Disconnect wire connector from fog lamp.
(3) Remove nuts attaching fog lamp to fascia.
(4) Remove lamp from fascia. The lower horn may need to be removed for removal access.
(5) Remove the two fasteners attaching the outboard end of the fascia to the fender.
(6) Rotate fog lamp housing forward, up, and out.

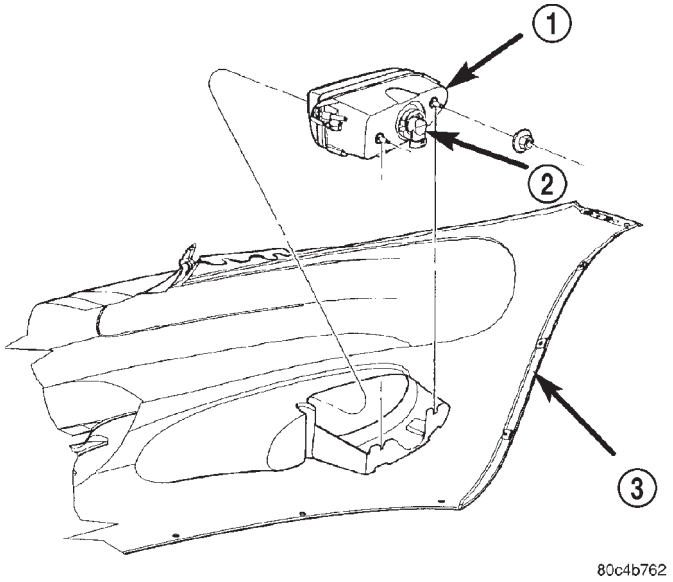

Fig. 6 Fog Lamp

1 – FOG LAMP ADAPTER
2 – FOG LAMP BULB
3 – FRONT FASCIA

INSTALLATION

CAUTION: Do not touch the glass of halogen bulbs with fingers or other possibly oily surface, reduced bulb life will result.

(1) Rotate fog lamp housing in to position (Fig. 6).
(2) Place fog lamp into position.
(3) Ensure that the three locating tabs molded into the fog lamp adapter are seated in the three matching fascia slots.
(4) Install nuts attaching fog lamp to fascia.
(5) Connect wire connector to the fog lamp.
(6) Install horn if removed.
(7) Install two fasteners to hold the outboard end of the fascia to the fender.

FRONT SIDE MARKER/PARK/TURN SIGNAL LAMP HOUSING

Refer to Headlamp Module removal procedures.

CENTER HIGH MOUNTED STOP LAMP (CHMSL)

REMOVAL

(1) Open liftgate.
(2) Remove liftgate CHMSL cover (Fig. 7).
(3) Disconnect the wire harness from the CHMSL.
(4) Remove screws attaching the center high mounted stop lamp (Fig. 8).
(5) Remove teh lamp from vehicle.

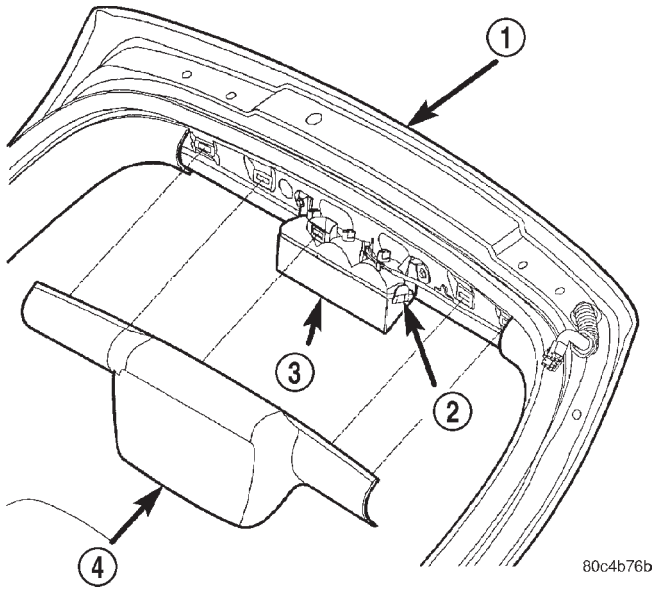

Fig. 7 Liftgate CHMSL Cover and Lamp

1 – LIFTGATE
2 – SNAP
3 – CHMSL LAMP
4 – CHMSL COVER

INSTALLATION

(1) Engage the wire harness connector to the CHMSL.
(2) Instal screws attaching the center high mounted stop lamp (Fig. 8).
(3) Test operation of lamps.
(4) Install liftgate CHMSL cover.
(5) Close liftgate.

REMOVAL AND INSTALLATION (Continued)

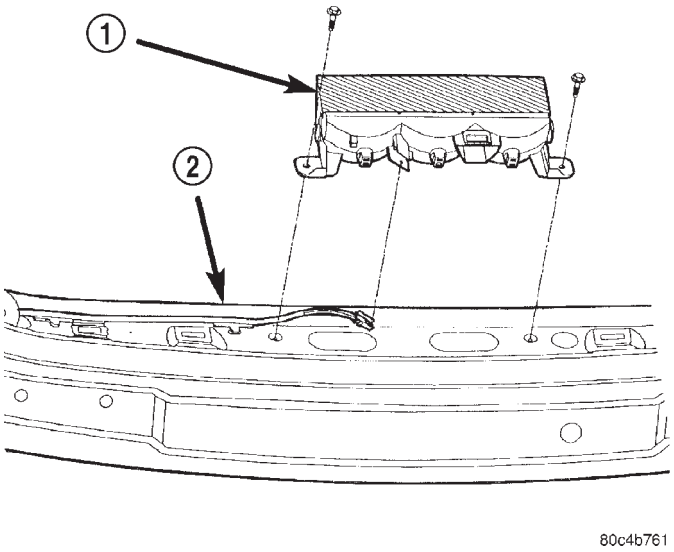

Fig. 8 CHMSL Lamp

1 – CHMSL LAMP
2 – LIFTGATE

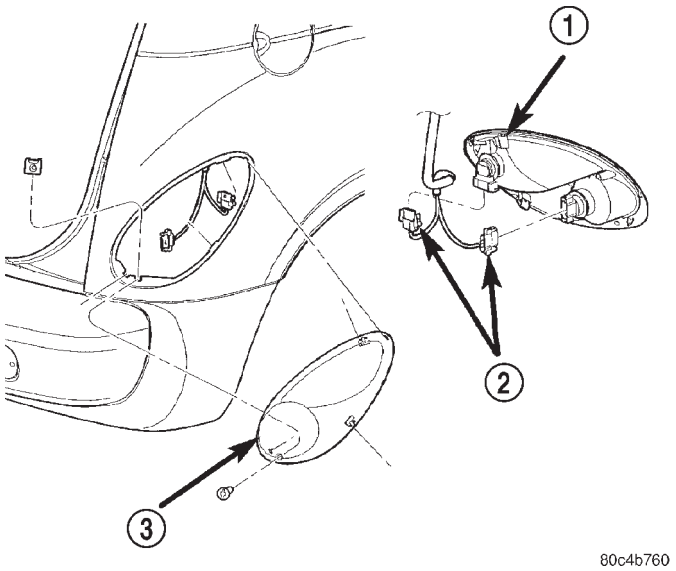

Fig. 9 Tail and Stop Lamp

1 – TAIL LAMP HOUSING
2 – WIRE CONNECTORS
3 – BOTTOM LOCATOR

TAIL, STOP AND TURN SIGNAL LAMP

REMOVAL

(1) Remove screw attaching tail lamp assembly to the aperture panel (Fig. 9).

(2) Slide the lamp assembly downward in the sheet metal opening.

(3) Remove the lamp assembly from the vehicle.

(4) Remove the bulb sockets from the lamp assembly by rotating the sockets counter-clockwise until free of the assembly.

INSTALLATION

(1) Install the bulb sockets to the lamp assembly by rotating the sockets clockwise until fully seated (Fig. 9).

(2) Test operation of lamps.

(3) Align the tail lamp assembly to the sheet metal opening.

(4) Insert the lower positioning tab on the lamp assembly into the matching slot and rotate the lamp forward until the retaining clips snap into position.

(5) Slide the assembly upwards within the sheet metal opening.

(6) Install the screw to hold tail lamp assembly to the aperture panel.

BACK UP LAMP

REMOVAL

(1) Remove screws attaching the back up lamp assembly to the fascia (Fig. 10).

(2) Remove back up lamp assembly.

(3) Remove the bulb socket from the lamp housing by rotating the socket counter-clockwise until the socket is free of the housing.

INSTALLATION

(1) Install the bulb socket into the lamp housing by rotating the socket clockwise until fully seated.

(2) Place back up lamp assembly into position.

(3) Test lamp operation

(4) Install screws attaching back up lamp to fascia.

LICENSE PLATE LAMP

REMOVAL

(1) Remove screws attaching license plate lamp to rear bumper (Fig. 11).

(2) Remove lamp from bumper.

(3) Disconnect wire connector and bulb.

INSTALLATION

(1) Connect wire connector and bulb (Fig. 11).

(2) Place lamp in position.

(3) Install screws attaching license plate lamp to rear bumper.

REMOVAL AND INSTALLATION (Continued)

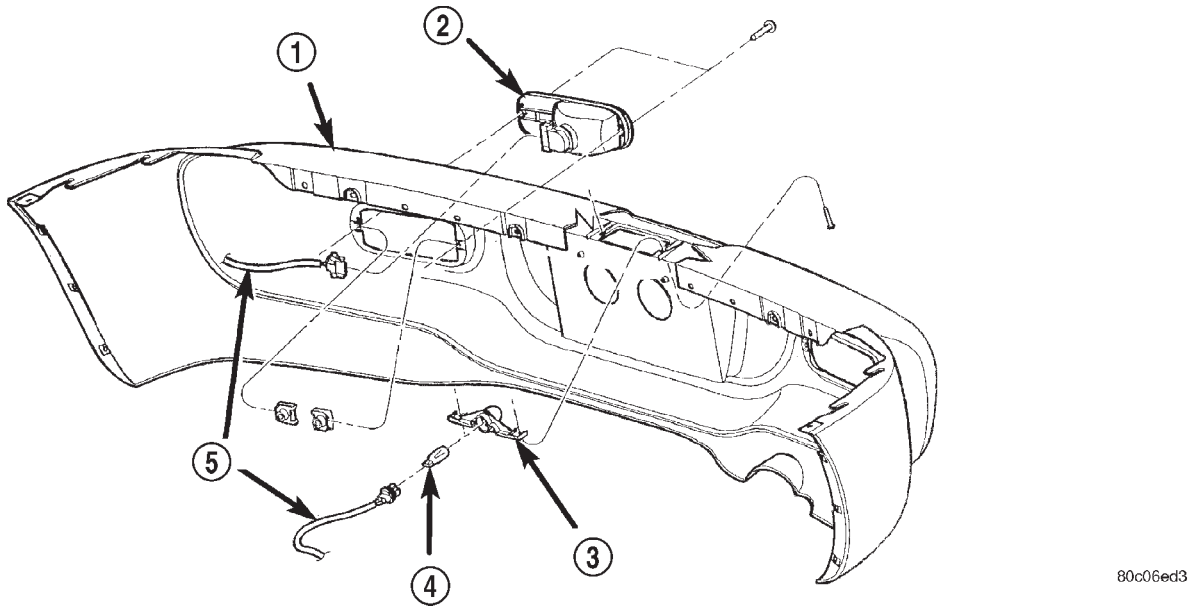

Fig. 10 Back Up Lamp

1 – REAR FASCIA
2 – BACKUP LAMP ASSY.
3 – LICENSE PLATE LAMP
4 – BULB
5 – CONNECTOR

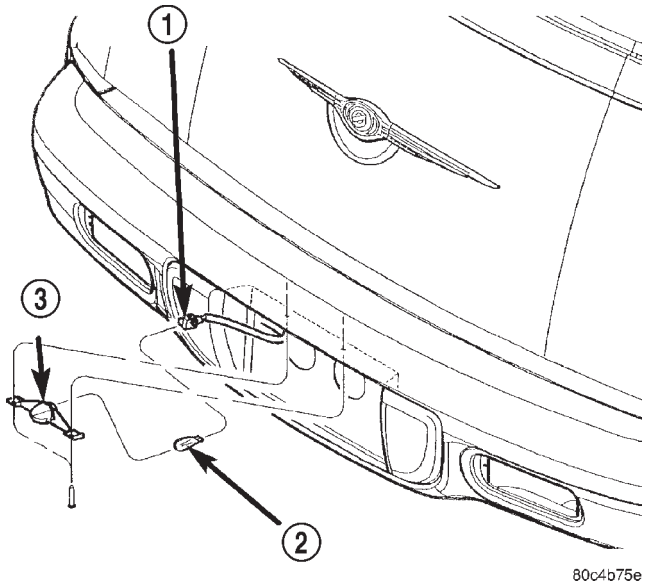

Fig. 11 License Plate Lamp

1 – CONNECTOR
2 – BULB
3 – LICENSE PLATE LAMP

CONSOLE FLOOD LAMP BULB

REMOVAL

(1) Using a flat blade tool, remove console flood lamp from the lower center console (Fig. 9).
(2) Remove console flood lamp housing to access lamp bulb.
(3) Remove lamp bulb cover.
(4) Remove bulb.

INSTALLATION

(1) Install bulb into console flood lamp.
(2) Snap cover into position.
(3) Test lamp.
(4) Place console flood lamp into position and apply hand pressure to snap lamp into lower center console (Fig. 9).

REMOVAL AND INSTALLATION (Continued)

REAR CARGO LAMP

REMOVAL

(1) Open liftgate.
(2) Remove jack storage door from right rear quarter trim panel.
(3) Remove jack and tool bag.
(4) Place right hand on stem of cargo lamp housing and pull downward until lens separates from the lamp housing (Fig. 10).
(5) Pull cargo lamp housing through jack storage door opening to access bulb.
(6) Disconnect wire connector from cargo lamp housing.
(7) Remove cargo lamp housing

INSTALLATION

(1) Snap lens onto lamp housing (Fig. 10).
(2) Move wire connector through lamp opening and connect wire connector to cargo lamp housing.
(3) Place cargo lamp housing into opening and apply hand pressure to seat lamp housing into rear quarter panel.
(4) Install jack and tool bag in the storage area.
(5) Install jack storage door to the right rear quarter trim panel.
(6) Close liftgate.

DOME LAMP

REMOVAL

(1) Insert a trim stick between the dome lamp bezel and dome lamp lens. Carefully pry down on one side of the lamp lens.
(2) Carefully pull down on lamp lens to remove lamp from headliner.
(3) Disconnect wire connector.
(4) Remove lamp from vehicle.

INSTALLATION

(1) Place lamp into position.
(2) Connect wire connector.
(3) Install dome lamp and lens.

VISOR VANITY LAMP

The visor vanity lamp is incorporated in the visor assembly. Replace the visor if the lamp has failed.

LAMP SYSTEMS

TABLE OF CONTENTS

page

DESCRIPTION AND OPERATION
DAYTIME RUNNING LAMP MODULE 18

DESCRIPTION AND OPERATION

DAYTIME RUNNING LAMP MODULE

DESCRIPTION

Vehicles built for use in Canada are equipped with a Daytime Running Lamp (DRL) system. Turn signal lamp circuitry always comes from the multi-function switch, and goes to the cluster connector, into the cluster, then back out to the front turn signal switch lamps.

OPERATION

The Canadian cluster provides steady illumination of the front turn signal when the ignition switch is in the ON position. The DRL function may be inhibited by activating the turn signals, the hazard flashers, the headlamp switch, or park brake.

BULB APPLICATION

TABLE OF CONTENTS

page

SPECIFICATIONS
EXTERIOR LAMPS. 19
INTERIOR LAMPS 19

SPECIFICATIONS

EXTERIOR LAMPS

CAUTION: Do not use bulbs that have a higher candle power than the bulb listed in the chart below. Damage to lamp can result. Do not touch halogen bulbs with fingers or other oily surfaces. Bulb life will be reduced.

LAMP	BULB
Back Up Lamp	3157 – P27/7W
Center High Mounted Stop Lamp (CHMSL)	W16W
Front Fog Lamp	9006
Front Park/Turn Signal Lamp/Side Marker	4157NAKX
Front Side Marker Lamp	168
Headlamp-Low Beam	9006XS
Headlamp-High Beam	9005XS
License Plate Lamp	168
Rear Tail/Stop/Turn Signal Lamp	3157 – P27/7W

INTERIOR LAMPS

Service procedures for most of the lamps can in found in the instrument panel service information, refer to Instrument Panel and Gauges.

CAUTION: Do not use bulbs that have a higher candle power than the bulb listed in the chart below. Damage to the lamp can result.

LAMP	BULB
ABS Indicator	LED
Airbag Indicator	LED
Brake System Warning Indicator	LED
Climate Controls	LED
Console Flood Lamp	T37
Console Transmission Range Indicator	T904
Dome Lamp	T579
Front Fog Lamp Indicator	LED
High Beam Lamp Indicator	PC194
Ignition Lock	161
Instrument Cluster Illumination	PC194
Low Fuel Indicator	LED
Low Oil Pressure Indicator	LED
Malfunction Indicator Light	LED
Map/Reading Lamp	T1037
Rear Cargo Lamp	T904
Seat Belt Indicator	LED
Security Alarm Indicator	LED
TRAC OFF Indicator	LED
Turn Signal Indicator	T103
Visor Vanity	6501966
Voltage Indicator	LED

All the interior bulbs utilize a brass or glass wedge base. Bulbs with aluminum bases are not approved and should not be used.

LAMPS

TABLE OF CONTENTS

page

EXPORT LAMP DESCRIPTION 1
LAMP DIAGNOSIS 3
HEADLAMP ALIGNMENT 5
LAMP BULB SERVICE 7
LAMP SERVICE. 9
BULB APPLICATION 12

EXPORT LAMP DESCRIPTION

TABLE OF CONTENTS

page

DESCRIPTION AND OPERATION
HEADLAMP LEVELING SYSTEM 1
FRONT POSITION LAMPS. 2
SIDE TURN SIGNAL REPEATER LAMPS 2

DESCRIPTION AND OPERATION

HEADLAMP LEVELING SYSTEM

DESCRIPTION

Some vehicles are equipped with a remote headlamp leveling system. This system allows the driver to adjust the headlamp beam pattern from the interior of the vehicle to compensate for passenger or cargo load. Only the vertical axis of the headlamp beam can be adjusted.

A headlamp leveling switch is located on the instrument panel and controls the headlamp leveling motors/modules found on the headlamp modules. Leveling switch has four settings 0-3, 0 being the lowest, 3 being the highest headlight beam vertical setting.

When performing a headlamp beam pattern alignment on a vehicle equipped with headlamp leveling, be certain the headlamp leveling switch is in the “0” position before starting. Failure to do so will result in and incorrect headlamp alignment.

OPERATION

With the rotation of the headlamp leveling switch control knob, voltage is adjusted at the headlamp leveling switch (rheostat). This signals the headlamp leveling motors to adjust the vertical headlamp beam pattern accordingly. Headlamps must be “on” in order for the leveling system to function.

DESCRIPTION AND OPERATION (Continued)

FRONT POSITION LAMPS

DESCRIPTION

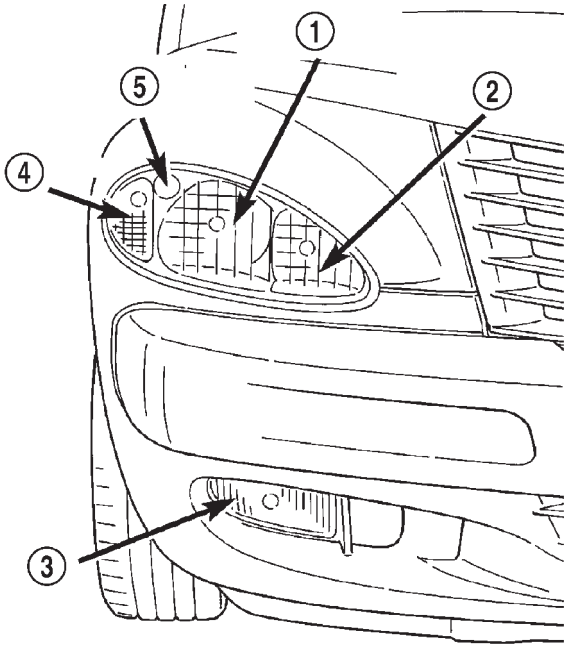

Fig. 1 Front Position Lamp Location

1 – LOW BEAM HEADLAMP
2 – HIGH BEAM HEADLAMP
3 – FOG LAMP
4 – TURN SIGNAL LAMP
5 – FRONT POSITION LAMP

Some vehicles are equipped with front position lamps. One front position lamp is incorporated into each of the headlamp modules (Fig. 1). Front position lamps utilize a clear lens and clear bulb. Refer to the bulb application table at the end of this group for specific bulb part #.

OPERATION

The front position lamps are turned on or off with the multi-function switch. Refer to Wiring Diagrams for a complete schematic.

SIDE TURN SIGNAL REPEATER LAMPS

DESCRIPTION

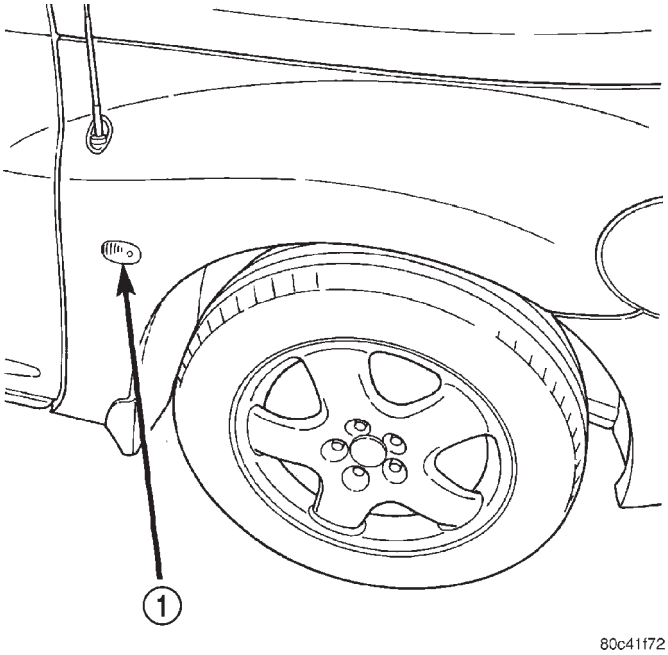

Fig. 2 Side Repeater Lamp Location

1 – SIDE REPEATER LAMP

Some vehicles are equipped with side turn signal repeater lamps. One side repeater lamp can be found on each side of the vehicle just behind the front wheel (Fig. 2). The side repeater lamp utilizes an amber colored housing and clear bulb. Refer to the bulb application table at the end of this group for specific bulb part #.

OPERATION

The side repeater lamps are turned on or off with the front and rear turn signal lamps and therefore controlled by the steering column mounted multi-function switch. Refer to Wiring Diagrams for a complete schematic.

LAMP DIAGNOSIS

TABLE OF CONTENTS

page

DIAGNOSIS AND TESTING
HEADLAMP LEVELING SYSTEM DIAGNOSIS 3
FRONT POSITION LAMP DIAGNOSIS 4
SIDE REPEATER LAMP DIAGNOSIS 4

DIAGNOSIS AND TESTING

HEADLAMP LEVELING SYSTEM DIAGNOSIS

The following test is designed to diagnosis a faulty headlamp leveling system. Refer to Wiring Diagrams for a complete system schematic.

NOTE: Battery must be completely charged (12.4v) prior to testing. It may also be necessary to install battery charger on the vehicles electrical system when performing this test. Refer to the Battery section of the service manual for detailed information.

(1) Rotate the headlamp switch (low beam) to the "ON" position.

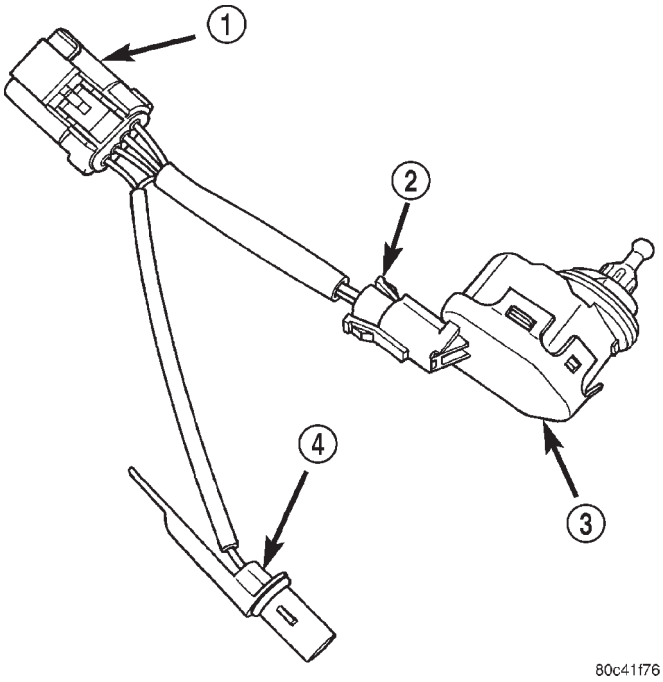

Fig. 1 Export Lamp Wire Harness Jumper

1 – EXPORT FRONT LAMP JUMPER
2 – HEADLAMP LEVELING MOTOR CONNECTOR
3 – HEADLAMP LEVELING MOTOR
4 – F. POSITION LAMP SOCKET

(2) Disconnect the headlamp wire harness jumper electrical connector (Fig. 1). This connector can be accessed by opening the bulb access panel, found in the appropriate front wheel well splash shield.

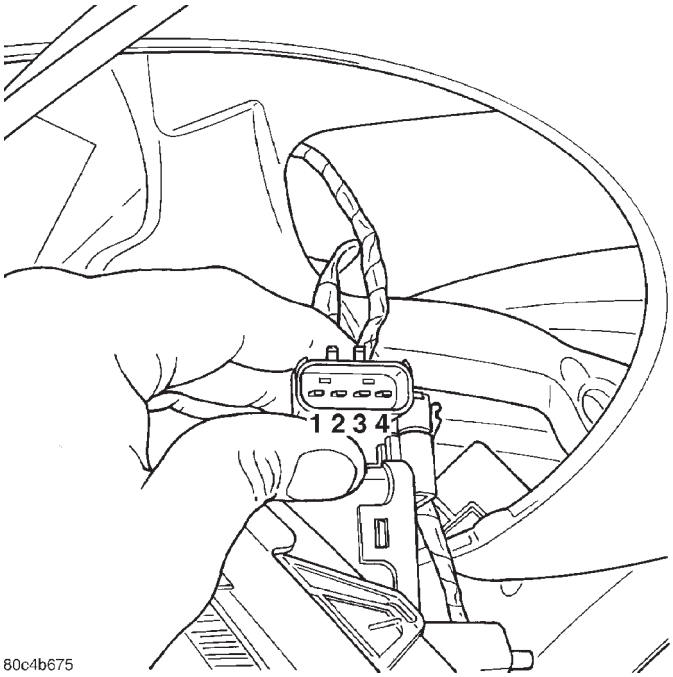

Fig. 2 Export Wire Harness Pin-out

(3) Check PIN #1 for battery voltage (Fig. 2), if not present trace circuit until open or short is found. Refer to Wiring Diagrams for complete schematic.

(4) Check PIN #2 for ground (Fig. 2), if not present trace circuit until open or short is found. Refer to Wiring Diagrams for complete schematic.

(5) Check PIN #3 for headlamp leveling sense voltage (2.83 – 8.60v) (Fig. 2), if not present trace circuit until open or short is found. Refer to Instrument Panel Systems, Headlamp Leveling Switch Diagnosis and Testing for additional information.

(6) If no open or short is found and headlamp leveling system is still inoperative, replace the headlamp leveling motor. Refer to the procedure in this group.

DIAGNOSIS AND TESTING (Continued)

FRONT POSITION LAMP DIAGNOSIS

The following test is designed to diagnosis a faulty front position lamp. Refer to Wiring Diagrams for a complete system schematic.

NOTE: Battery must be completely charged (12v) prior to testing. It may also be necessary to install battery charger on the vehicles electrical system when performing this test. Refer to the Battery section of the service manual for detailed information.

(1) Remove the front position lamp bulb and check for burned out condition, replace bulb if necessary.

(2) If bulb appears OK, reinstall the bulb in its socket and rotate the left side multi-function switch one detent position and check for lamp operation. If lamp is still inoperative proceed to step #3.

(3) Remove lamp bulb and check for proper power (12v) and ground connections in lamp socket. If power and / or ground connections are not present, trace wire until open or short is found. Refer to Wiring Diagrams for a complete system schematic.

SIDE REPEATER LAMP DIAGNOSIS

The following test is designed to diagnosis a faulty side repeater lamp. Refer to Wiring Diagrams for a complete system schematic.

NOTE: Battery must be completely charged (12v) prior to testing. It may also be necessary to install battery charger on the vehicles electrical system when performing this test. Refer to the Battery section of the service manual for detailed information.

(1) Remove the side repeater lamp bulb and check for burned out condition, replace bulb if necessary.

(2) If bulb appears OK, reinstall the bulb in its socket and rotate the ignition switch to the “ON” position. Turn the appropriate turn signal lamp “ON” and check for lamp operation. If lamp is still inoperative proceed to step #3.

(3) Remove lamp bulb and check for proper power (12v) and ground connections in lamp socket. If power and / or ground connections are not present, trace wire until open or short is found. Refer to Wiring Diagrams for a complete system schematic.

HEADLAMP ALIGNMENT

TABLE OF CONTENTS

page

SERVICE PROCEDURES
HEADLAMP ALIGNMENT PREPARATION. 5

page

ADJUSTMENTS
HEADLAMP ADJUSTMENT USING ALIGNMENT SCREEN - EUROPEAN 5

SERVICE PROCEDURES

HEADLAMP ALIGNMENT PREPARATION

(1) Verify headlamp dimmer switch and high beam indicator operation.

(2) Verify that the headlamp leveling switch is in the “0” position.

(3) Inspect and correct damaged or defective components that could interfere with proper headlamp alignment.

(4) Verify proper tire inflation.

(5) Clean headlamp lenses.

(6) Verify that luggage area is loaded as the vehicle is routinely used.

(7) Fuel tank should be FULL. Add 2.94 kg (6.5 lbs.) of weight over the fuel tank for each estimated gallon of missing fuel.

ADJUSTMENTS

HEADLAMP ADJUSTMENT USING ALIGNMENT SCREEN - EUROPEAN

ALIGNMENT SCREEN PREPARATION

(1) Position vehicle on a level surface perpendicular to a flat wall 10 meters (32.8 ft.) away from front of headlamp lens (Fig. 1).

(2) Place 75 kg in the driver’s seat to simulate the ride height of the vehicle when driven.

(3) If necessary, tape a line on the floor 10 meters (32.8 ft) away from and parallel to the wall.

(4) From the floor up 1.27 meters (5 ft), tape a line on the wall at the centerline of the vehicle. Sight along the centerline of the vehicle (from rear of vehicle forward) to verify accuracy of the line placement.

(5) Rock vehicle side-to-side three times and allow suspension to stabilize.

(6) Jounce front suspension three times by pushing downward on front bumper and releasing.

(7) Measure the distance from the center of headlamp lens to the floor. Transfer measurement to the alignment screen (with tape). Use this line for up/down adjustment reference.

(8) Place a tape line 130 mm below and parallel to the center of headlamp line.

(9) Measure distance from the centerline of the vehicle to the center of each headlamp being aligned. Transfer measurements to screen (with tape) to each side of vehicle centerline. Use these lines for left/right adjustment reference.

ADJUSTMENTS (Continued)

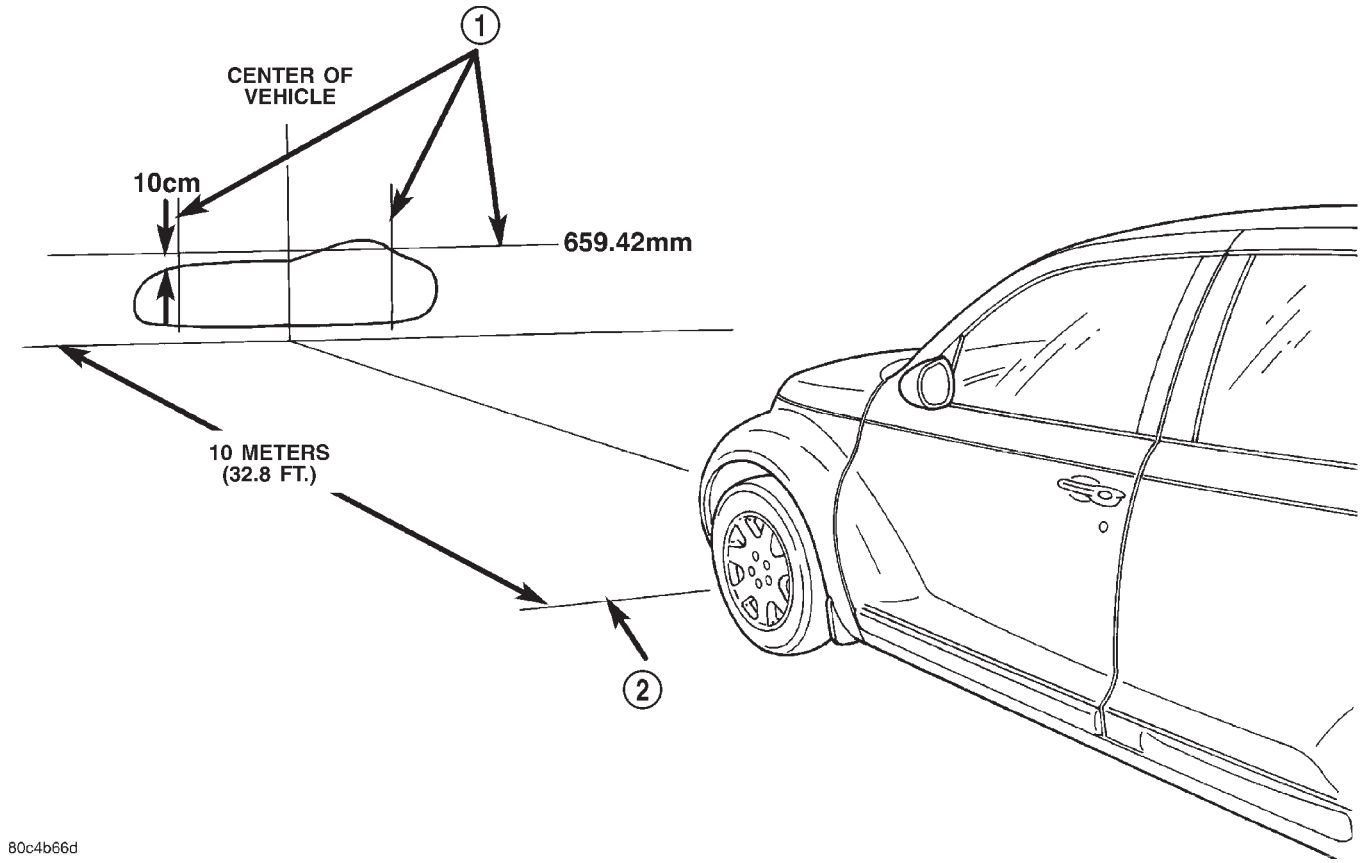

Fig. 1 Headlamp Alignment Screen

1 – CENTER OF HEADLAMPS
2 – FRONT OF HEADLAMP

HEADLAMP ADJUSTMENT

A properly aimed low beam headlamp will project a high intensity light pattern on the screen with the horizontal cut-off line aligned with the tape line 130 mm (5.12 in.) below the headlamp centerline (Fig. 1). The intersection of the horizontal and 15 degree cut-off lines in the projected pattern should align to the intersection of the headlamp centerline vertical tape line and the tape line 130 mm (5.12 in.) below the headlamp horizontal centerline. The high beams on a vehicle with aero headlamps cannot be aligned. The high beam pattern should be correct when the low beams are aligned properly.

To adjust headlamp alignment, rotate the alignment screws **(horizontal and vertical)** to achieve the specified low beam spot pattern. The alignment screws are located in the front of the headlamp module, just below the lense.

FOG LAMP ALIGNMENT

The fog lamp alignment is unchanged for ROW market vehicles. Refer to Fog Lamp Alignment in the Lamps section of the service manual for detailed procedure.

LAMP BULB SERVICE

TABLE OF CONTENTS

page

REMOVAL AND INSTALLATION
FRONT POSITION LAMP BULB 7
SIDE REPEATER LAMP BULB 7
DOME LAMP BULB 8

REMOVAL AND INSTALLATION

FRONT POSITION LAMP BULB

REMOVAL

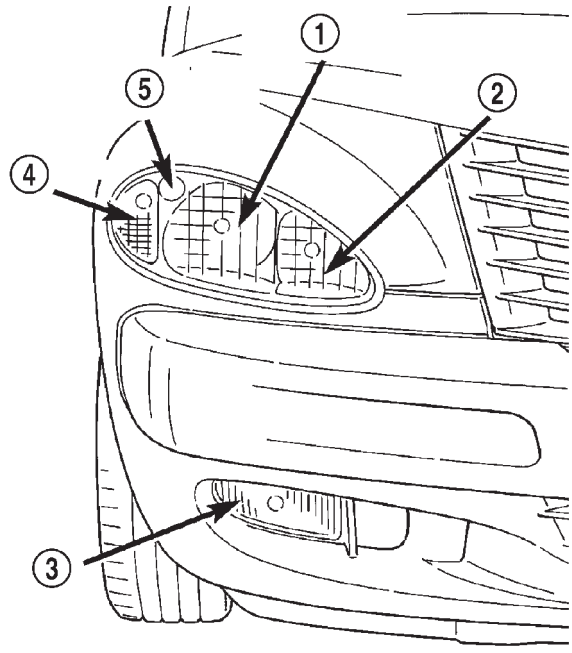

Fig. 1 Front Position Lamp Location

1 – LOW BEAM HEADLAMP
2 – HIGH BEAM HEADLAMP
3 – FOG LAMP
4 – TURN SIGNAL LAMP
5 – FRONT POSITION LAMP

(1) Working in the appropriate wheel well, open the lamp bulb access door located in the front portion of the front wheel well splash shield.

(2) Grasp the front position lamp socket extension and pull straight out of headlamp module.

(3) Rotate bulb counter-clockwise and pull straight from its socket.

INSTALLATION

(1) Install the bulb in its socket.

(2) Verify lamp operation.

(3) Install front position lamp in headlamp module.

SIDE REPEATER LAMP BULB

REMOVAL

(1) Remove the appropriate front wheel well splash shield retaining screws. Reaching through wheel well, depress side repeater lamp retaining tabs and release from front fender.

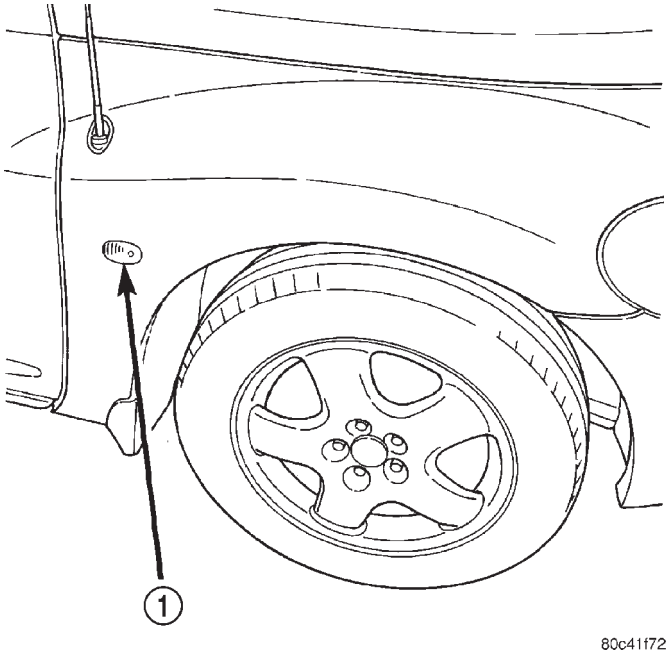

Fig. 2 Side Repeater Lamp

1 – SIDE REPEATER LAMP

(2) Pull side repeater lamp out and disengage bulb socket from lamp.

(3) Rotate and pull bulb from socket.

REMOVAL AND INSTALLATION (Continued)

INSTALLATION

(1) Push and twist bulb into socket.
(2) Verify lamp operation.
(3) Push side repeater lamp socket into side repeater lamp.
(4) Position side repeater lamp to hole in fender.
(5) Push side repeater lamp to one side and seat retaining tab into fender.

DOME LAMP BULB

REMOVAL

(1) Using suitable pry tool, gently pry open dome lamp lens (Fig. 3).
(2) Remove dome lamp bulb from dome lamp.

INSTALLATION

(1) Install dome lamp bulb.
(2) Close dome lamp lens (Fig. 3).

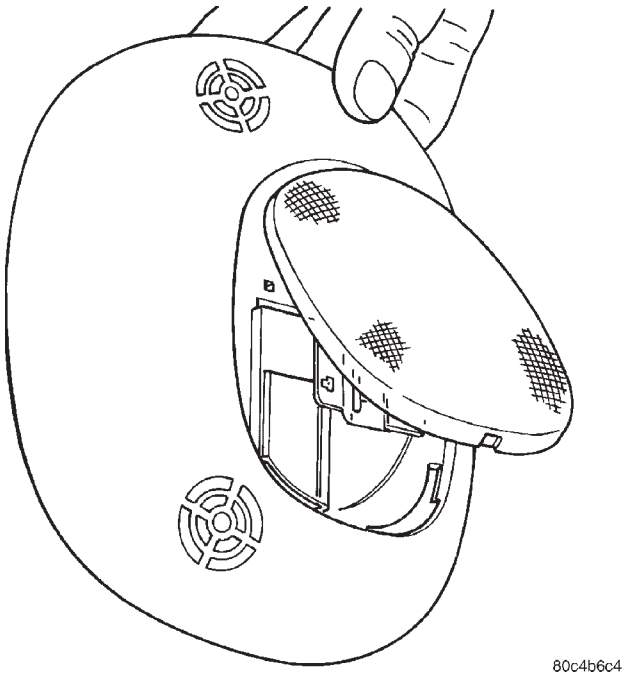

Fig. 3 Accessing Dome Lamp Bulb

LAMP SERVICE

TABLE OF CONTENTS

page

REMOVAL AND INSTALLATION
HEADLAMP MODULE - BUX 9
HEADLAMP LEVELING MOTOR. 10
SIDE REPEATER LAMP 10
DOME LAMP - INTRUSION SENSOR 11

REMOVAL AND INSTALLATION

HEADLAMP MODULE - BUX

REMOVAL

(1) Disconnect and isolate the negative battery cable.
(2) Remove the front grille. Refer to the Body section for detailed instructions.
(3) Partially raise the vehicle on a hoist.

NOTE: Partial front fascia removal is required to remove headlamp module.

(4) Partially remove the appropriate side of the front fascia assembly. Refer to the Body section for detailed instructions.
(5) Cover front fascia on the side corresponding with headlamp requiring service. This will prevent fascia paint damage during headlamp module removal.
(6) Remove the left front tire and wheel assembly.
(7) Remove the appropriate wheel well splash shield from the vehicle. Refer to the Body section for detailed instructions.
(8) Disconnect the headlamp module electrical connector.
(9) Remove the (4) headlamp module retaining fasteners (Fig. 1).
(10) Grasp the headlamp module with both hands and pull straight out sharply. This will unsnap the module from its mounting location (Fig. 2).

CAUTION: Be certain not to damage headlamp leveling motor during module removal (Fig. 2). Avoid "twisting" module during removal process. Module should be pulled straight out.

INSTALLATION

(1) Position the assembled module so its mounting studs are inserted through there corresponding holes in the front body sheet metal.
(2) Install the (4) headlamp module retaining fasteners (Fig. 1). Torque to 9.6 N·m (85 in. lbs.)

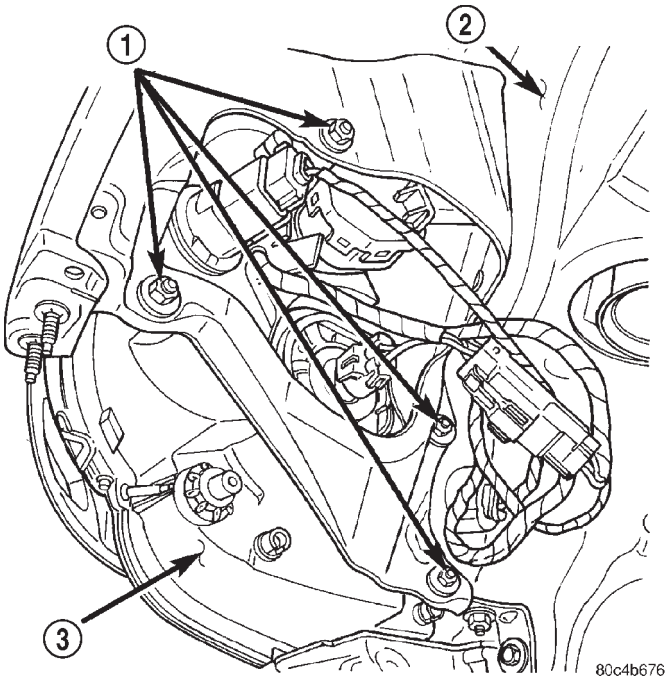

Fig. 1 Headlamp Module Retaining Fasteners
1 – HEADLAMP MODULE RETAINING NUTS
2 – LEFT FRONT WHEEL WELL
3 – HEADLAMP MODULE

(3) Connect the headlamp module electrical connector.
(4) Install the appropriate wheel well splash shield in the vehicle.
(5) Install the left front tire and wheel assembly. Refer to the Wheels section of the service manual for detailed instructions.
(6) Install the front fascia assembly. Refer to the Body section for detailed instructions.
(7) Lower the vehicle on hoist.
(8) Install the front grille. Refer to the Body section for detailed instructions.

NOTE: If a replacement headlamp module was installed, headlamps must be aligned. Refer to the procedure in this section of the service manual.

(9) Connect the negative battery cable.

REMOVAL AND INSTALLATION (Continued)

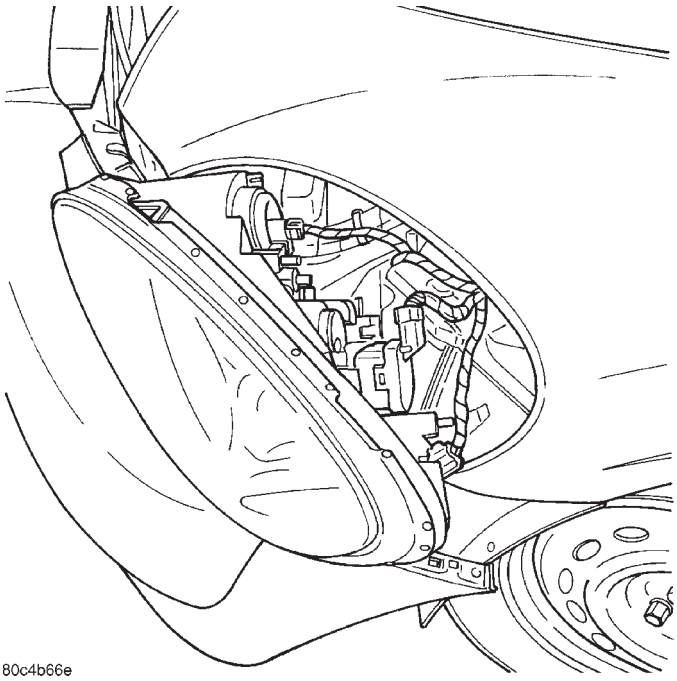

Fig. 2 Headlamp Module

HEADLAMP LEVELING MOTOR

REMOVAL

(1) Remove headlamp module from vehicle.Refer to the procedure in this section of the service manual.

(2) Disconnect headlamp leveling motor electrical connector.

(3) Rotate leveling motor one quarter turn counter-clockwise. This will free leveling motor housing from module housing

(4) Pull leveling motor straight from module housing. Significant force will be required to unsnap motor control arm from lens reflector.

NOTE: The headlamp leveling motor control arm is snapped into the lens reflector mechanism very securely. Use a firm, steady pull to disengage motor arm from reflector.

(5) Remove leveling motor from headlamp module.

INSTALLATION

(1) While holding headlamp reflector assembly still, push leveling motor until control arm is fully seated into reflector mechanism. An audible “snap” will be heard.

(2) Push and rotate leveling motor one quarter turn clockwise to lock motor to module housing.

(3) Connect headlamp leveling motor electrical connector.

(4) Install headlamp module in the vehicle. Refer to the procedure in this section of the service manual.

SIDE REPEATER LAMP

REMOVAL

(1) Remove the appropriate front wheel well splash shield retaining screws. Reaching through wheel well, depress side repeater lamp retaining tabs and release from front fender.

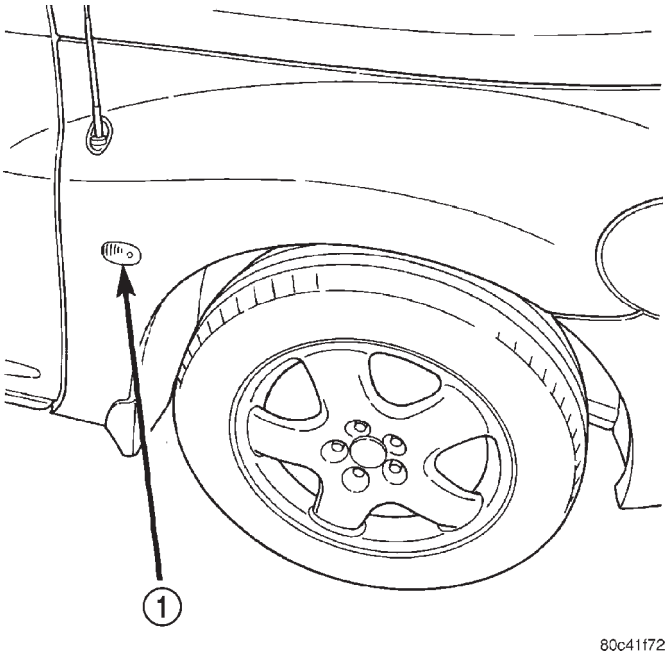

Fig. 3 Side Repeater Lamp

1 – SIDE REPEATER LAMP

(2) Pull side repeater lamp out and disengage bulb socket from lamp.

INSTALLATION

(1) Push side repeater lamp socket into side repeater lamp.

(2) Position side repeater lamp to hole in fender.

(3) Push side repeater lamp to one side and seat retaining tab into fender.

(4) Verify lamp operation.

REMOVAL AND INSTALLATION (Continued)

DOME LAMP - INTRUSION SENSOR

REMOVAL

(1) Disconnect and isolate the negative battery cable.

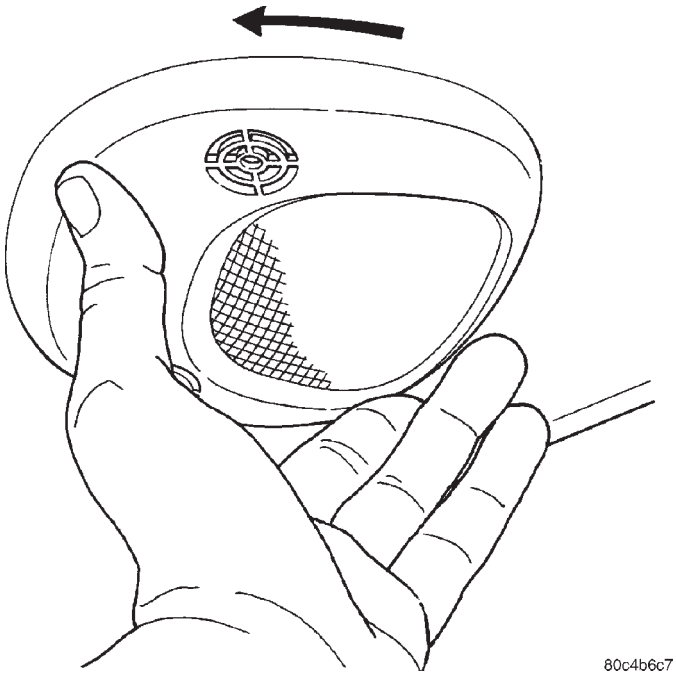

Fig. 4 Removing Dome Lamp / Intrusion Sensor

(2) Grasp the dome lamp / intrusion sensor and rotate to line-up with headliner cut-out pattern (Fig. 5).

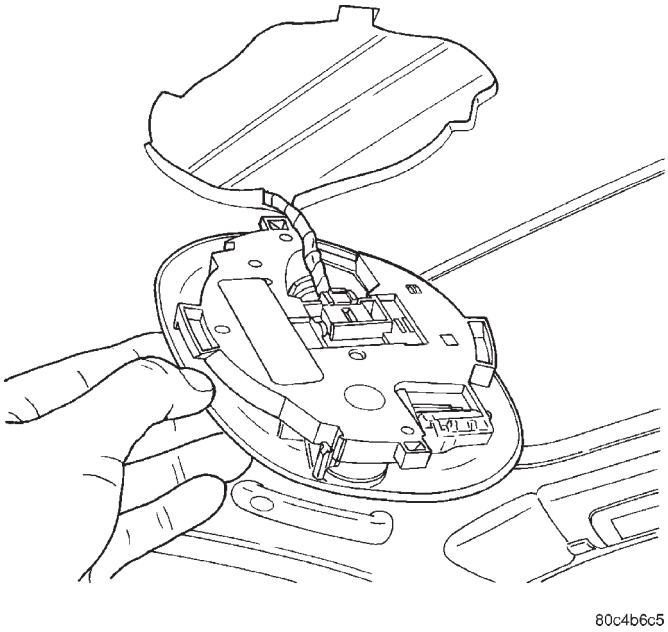

Fig. 5

(3) Disconnect dome lamp / intrusion sensor electrical connector.

(4) Remove the lamp / intrusion sensor from the vehicle.

INSTALLATION

(1) Connect dome lamp / intrusion sensor electrical connector.

(2) Install dome lamp / intrusion sensor in headliner.

(3) Connect the negative battery cable.

BULB APPLICATION

TABLE OF CONTENTS

page

CLEANING AND INSPECTION
HEADLAMP CLEANING 12
SPECIFICATIONS
INTRODUCTION 12
EXTERIOR LAMP BULBS. 12

CLEANING AND INSPECTION

HEADLAMP CLEANING

This vehicle is equipped with plastic headlights that are lighter and less susceptible to stone breakage than glass headlights.

This plastic is not as scratch resistant as glass and therefore a different lens cleaning procedures must be followed.

To minimize the possibility of scratching the lenses and reducing light output, avoid wiping with a dry cloth. To remove road dirt, wash with a mild soap solution followed by rinsing with water.

Do not use abrasive cleaning components, solvents, steel wool or other aggressive material to clean the lenses.

SPECIFICATIONS

INTRODUCTION

The following Bulb Application Tables list the lamp title on the left side of the column and trade number or part number on the right.

CAUTION: Do not use bulbs that have a higher candle power than the bulb listed in the Bulb Application Table. Damage to lamp can result.

Do not touch halogen bulbs with fingers or other possibly oily surfaces. Bulb life will be reduced.

If a halogen bulb is contaminated with oil, clean bulb with denatured alcohol or ammonia based solvent.

EXTERIOR LAMP BULBS

LAMP	BULB
Front Position Lamp	W5W
Side Repeater Lamp	PY27W

RESTRAINT SYSTEMS

TABLE OF CONTENTS

page

FRONT AIRBAG SYSTEM 1
SIDE AIRBAG SYSTEM 15
SEAT BELT TENSIONER 21

FRONT AIRBAG SYSTEM

TABLE OF CONTENTS

page

DESCRIPTION AND OPERATION
FRONT AIRBAG SYSTEM 1
OCCUPANT RESTRAINT CONTROLLER (ORC). . . 3
CLOCKSPRING 3
DRIVER AIRBAG MODULE 4
PASSENGER AIRBAG MODULE 5
DIAGNOSIS AND TESTING
AIRBAG SYSTEM 6
SERVICE PROCEDURES
HANDLING AIRBAG MODULES 6
REMOVAL AND INSTALLATION
WARNINGS AND PRECAUTIONS 7
OCCUPANT RESTRAINT CONTROLLER (ORC). . . 8
CLOCKSPRING 8
DRIVER AIRBAG MODULE 9
PASSENGER AIRBAG MODULE/COVER 11
STEERING WHEEL 13
CLEANING AND INSPECTION
CLEAN UP PROCEDURE. 14
MAINTENANCE INSPECTION 14
ADJUSTMENTS
CLOCKSPRING CENTERING PROCEDURE. 14

DESCRIPTION AND OPERATION

FRONT AIRBAG SYSTEM

DESCRIPTION

A dual front airbag system is standard factory-installed safety equipment on this model. Both the driver and passenger airbag modules are certified to new federal regulations, which allows them to deploy with less force than prior airbags. The primary passenger restraints in this vehicle are the seat belts, which require active use by the vehicle occupants. The front airbag system is a supplemental passive restraint that was designed and is intended to enhance the protection for the front seat occupants of the vehicle when used in conjunction with the seat belts.

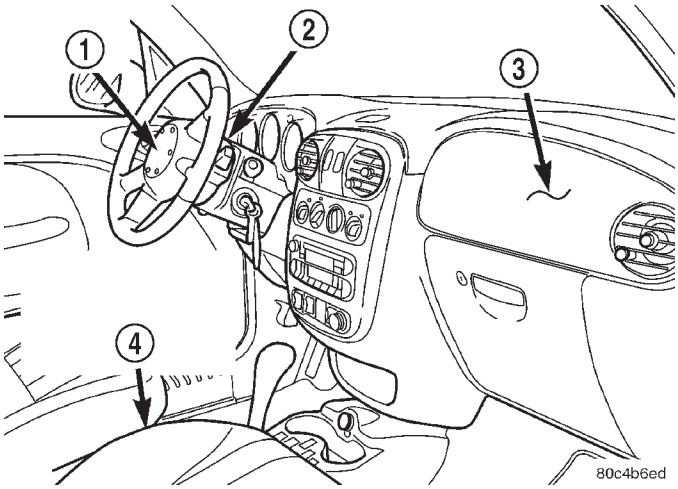

Fig. 1 Front Airbag System Component Location

1 – DRIVER AIRBAG
2 – CLOCKSPRING
3 – PASSENGER AIRBAG
4 – OCCUPANT RESTRAINT CONTROLLER (ORC)

DESCRIPTION AND OPERATION (Continued)

The driver airbag module includes an inflatable airbag and an inflator unit behind a trim cover in the hub area of the steering wheel. The passenger airbag module includes a second inflatable airbag and an inflator unit behind an airbag door in the instrument panel above the glove box.

The dual front airbag system consists of the following components:

- Occupant Restraint Controller (ORC)
- Airbag indicator lamp
- Clockspring
- Driver and passenger airbag modules (including the airbag inflators)
- Wire harness and connections.

See the proper Body Diagnostic Procedures manual to test or diagnose a problem with any component of the front airbag system.

OPERATION

The front airbag system electrical circuits are continuously monitored and controlled by a microprocessor and software contained within the Occupant Restraint Controller (ORC). The ORC also contains an impact sensor and a safing sensor, which are monitored by the ORC to determine when an impact occurs that is severe enough to require front airbag system protection. When a frontal impact is severe enough, the ORC initiates the inflator units of both front airbag modules to deploy the airbags.

An airbag indicator lamp in the instrument cluster lights for about six to eight seconds as a bulb test each time the ignition switch is turned to the ON position. Following the bulb test, the airbag indicator lamp is turned ON or OFF by the ORC to indicate the status of the airbag system. If the airbag indicator lamp comes ON at any time other than during the bulb test, it indicates that there is a problem in the airbag system circuits. Such a problem may cause the airbags not to deploy when required, or to deploy when not required.

During a frontal vehicle impact, the knee blockers work in concert with properly adjusted seat belts to restrain the driver and front seat passenger in the proper position for an airbag deployment. The knee blockers also work to absorb and distribute the crash energy from the driver and front seat passenger to the structure of the instrument panel. The driver side knee blocker is integral to the left lower instrument panel bezel. The passenger side knee blocker is integral to the glove box door.

Following are general descriptions of the major components in the airbag system.

WARNING:

- **THE FRONT AIRBAG SYSTEM IS A SENSITIVE, COMPLEX ELECTROMECHANICAL UNIT. BEFORE ATTEMPTING TO DIAGNOSE OR SERVICE ANY FRONT AIRBAG SYSTEM OR RELATED STEERING WHEEL, STEERING COLUMN, OR INSTRUMENT PANEL COMPONENTS YOU MUST FIRST DISCONNECT AND ISOLATE THE BATTERY NEGATIVE (GROUND) CABLE. THEN WAIT TWO MINUTES FOR THE SYSTEM CAPACITOR TO DISCHARGE BEFORE FURTHER SYSTEM SERVICE. THIS IS THE ONLY SURE WAY TO DISABLE THE AIRBAG SYSTEM. FAILURE TO DO THIS COULD RESULT IN ACCIDENTAL FRONT AIRBAG DEPLOYMENT AND POSSIBLE PERSONAL INJURY.**
- **THE DRIVER AIRBAG MODULE INFLATOR ASSEMBLY CONTAINS PYROTECHNIC MATERIALS THAT ARE POISONOUS AND EXTREMELY FLAMMABLE. CONTACT WITH ACID, WATER, OR HEAVY METALS MAY PRODUCE HARMFUL AND IRRITATING GASES OR COMBUSTIBLE COMPOUNDS. THE PASSENGER AIRBAG MODULE CONTAINS PRESSURIZED ARGON GAS. DO NOT ATTEMPT TO DISMANTLE AN AIRBAG MODULE OR TAMPER WITH ITS INFLATOR. DO NOT PUNCTURE, INCINERATE, OR BRING INTO CONTACT WITH ELECTRICITY. DO NOT STORE AT TEMPERATURES EXCEEDING 93° C (200° F).**
- **REPLACE FRONT AIRBAG SYSTEM COMPONENTS ONLY WITH PARTS SPECIFIED IN THE CHRYSLER MOPAR PARTS CATALOG. SUBSTITUTE PARTS MAY APPEAR INTERCHANGEABLE, BUT INTERNAL DIFFERENCES MAY RESULT IN INFERIOR OCCUPANT PROTECTION.**
- **THE FASTENERS, SCREWS, AND BOLTS ORIGINALLY USED FOR THE FRONT AIRBAG SYSTEM COMPONENTS HAVE SPECIAL COATINGS AND ARE SPECIFICALLY DESIGNED FOR THE FRONT AIRBAG SYSTEM. THEY MUST NEVER BE REPLACED WITH ANY SUBSTITUTES. ANY TIME A NEW FASTENER IS NEEDED, REPLACE IT WITH THE CORRECT FASTENERS PROVIDED IN THE SERVICE PACKAGE OR SPECIFIED IN THE CHRYSLER MOPAR PARTS CATALOG.**
- **WHEN A STEERING COLUMN HAS AN AIRBAG MODULE ATTACHED, NEVER PLACE THE COLUMN ON THE FLOOR OR ANY OTHER SURFACE WITH THE STEERING WHEEL OR AIRBAG MODULE FACE DOWN.**
- **DO NOT PLACE A NON-DEPLOYED AIRBAG FACE DOWN ON A HARD SURFACE, THE AIRBAG WILL PROPEL INTO THE AIR IF ACCIDENTALLY DEPLOYED, AND COULD RESULT IN SERIOUS OR FATAL INJURY.**

DESCRIPTION AND OPERATION (Continued)

OCCUPANT RESTRAINT CONTROLLER (ORC)

DESCRIPTION

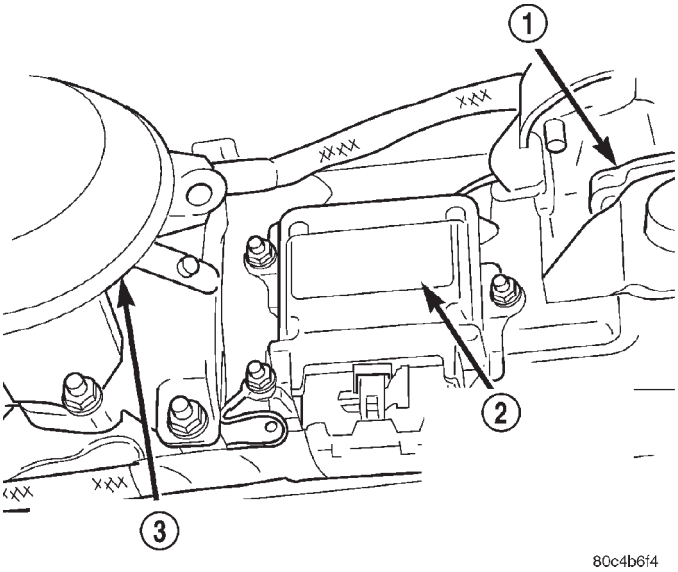

Fig. 2 Occupant Restraint Controller (ORC) Location

1 – PARKING BRAKE
2 – OCCUPANT RESTRAINT CONTROLLER ORC
3 – CONSOLE GEAR SELECTOR

The Occupant Restraint Controller (ORC) is mounted on the tunnel floor pan, between the transmission shifter and parking brake.

The ORC contains a microprocessor, the impact sensor, and energy storage capacitors. The microprocessor contains the airbag system logic. The airbag system logic includes On-Board Diagnostics (OBD) capability, and communicates with the instrument cluster circuitry on the Programmable Communication Interface (PCI) data bus to control the airbag indicator lamp.

OPERATION

The accelerometer is located inside the ORC. The accelerometer provides confirmation of a crash, discriminating severity. The ORC monitors the system to determine the system readiness. The ORC contains on-board diagnostics, and will illuminate the AIRBAG warning lamp on the cluster when a fault occurs. The warning equipment is tested for a few seconds every time the vehicle is started.

The microprocessor on the ORC monitors the impact sensor signal and the airbag system electrical circuits to determine the system readiness If the ORC detects a monitored system fault, it sends messages to the instrument cluster over the PCI bus to turn on the airbag warning lamp. A pre-programmed decision algorithm in the ORC microprocessor determines when the deceleration rate is severe enough to require airbag system protection. When the programmed conditions are met, the ORC sends an electrical signal to deploy the airbag system airbag modules. The impact sensor is an accelerometer that senses the rate of vehicle deceleration, which provides verification of the direction and severity of an impact. The ORC is calibrated for the specific vehicle, and is only serviced as a unit. The ORC also contains an energy-storage capacitor. The purpose of the capacitor is to provide airbag system protection if the impact has damaged or disconnected the battery. The ORC cannot be repaired or adjusted, and if damaged or faulty, must be replaced.

WARNING:

- **THE FRONT AIRBAG SYSTEM IS A SENSITIVE, COMPLEX ELECTROMECHANICAL UNIT. BEFORE ATTEMPTING TO DIAGNOSE OR SERVICE ANY FRONT AIRBAG SYSTEM OR RELATED STEERING WHEEL, STEERING COLUMN, OR INSTRUMENT PANEL COMPONENTS YOU MUST FIRST DISCONNECT AND ISOLATE THE BATTERY NEGATIVE (GROUND) CABLE. THEN WAIT TWO MINUTES FOR THE SYSTEM CAPACITOR TO DISCHARGE BEFORE FURTHER SYSTEM SERVICE. THIS IS THE ONLY SURE WAY TO DISABLE THE FRONT AIRBAG SYSTEM. FAILURE TO DO THIS COULD RESULT IN ACCIDENTAL FRONT AIRBAG DEPLOYMENT AND POSSIBLE PERSONAL INJURY.**
- **REPLACE FRONT AIRBAG SYSTEM COMPONENTS ONLY WITH PARTS SPECIFIED IN THE CHRYSLER MOPAR PARTS CATALOG. SUBSTITUTE PARTS MAY APPEAR INTERCHANGEABLE, BUT INTERNAL DIFFERENCES MAY RESULT IN INFERIOR OCCUPANT PROTECTION.**
- **THE FASTENERS, SCREWS, AND BOLTS ORIGINALLY USED FOR THE FRONT AIRBAG SYSTEM COMPONENTS HAVE SPECIAL COATINGS AND ARE SPECIFICALLY DESIGNED FOR THE FRONT AIRBAG SYSTEM. THEY MUST NEVER BE REPLACED WITH ANY SUBSTITUTES. ANY TIME A NEW FASTENER IS NEEDED, REPLACE IT WITH THE CORRECT FASTENERS PROVIDED IN THE SERVICE PACKAGE OR SPECIFIED IN THE CHRYSLER MOPAR PARTS CATALOG.**

CLOCKSPRING

DESCRIPTION

The clockspring is mounted on the steering column behind the steering wheel. This assembly consists of a flat, ribbon like, electrically conductive tape that winds and unwinds with the steering wheel rotation.

DESCRIPTION AND OPERATION (Continued)

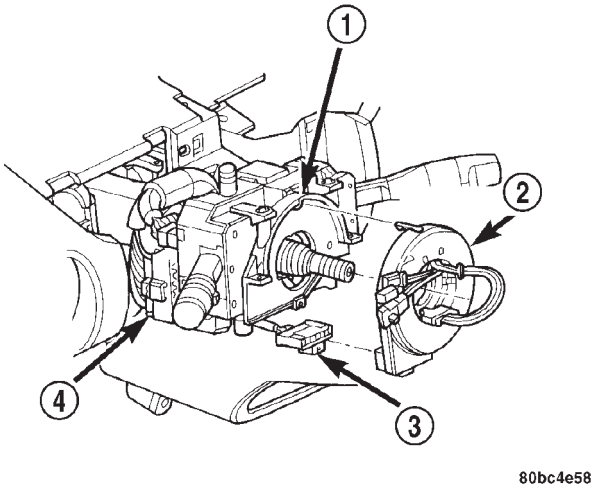

Fig. 3 Clockspring Location

1 – STEERING COLUMN
2 – CLOCKSPRING
3 – CLOCKSPRING ELECTRICAL CONNECTOR
4 – IGNITION SWITCH ELECTRICAL CONNECTOR

OPERATION

It is used to maintain a continuous electrical circuit between the wiring harness and the Driver Airbag Module.

The clockspring must be properly centered when it is installed on the steering column following any service removal, or it will be damaged. See the Clockspring Centering procedure in this group for more information.

The clockspring cannot be repaired. If the clockspring is faulty, damaged, or if the airbag has been deployed, the clockspring must be replaced.

WARNING:

• THE FRONT AIRBAG SYSTEM IS A SENSITIVE, COMPLEX ELECTROMECHANICAL UNIT. BEFORE ATTEMPTING TO DIAGNOSE OR SERVICE ANY FRONT AIRBAG SYSTEM OR RELATED STEERING WHEEL, STEERING COLUMN, OR INSTRUMENT PANEL COMPONENTS YOU MUST FIRST DISCONNECT AND ISOLATE THE BATTERY NEGATIVE (GROUND) CABLE. THEN WAIT TWO MINUTES FOR THE SYSTEM CAPACITOR TO DISCHARGE BEFORE FURTHER SYSTEM SERVICE. THIS IS THE ONLY SURE WAY TO DISABLE THE FRONT AIRBAG SYSTEM. FAILURE TO DO THIS COULD RESULT IN ACCIDENTAL FRONT AIRBAG DEPLOYMENT AND POSSIBLE PERSONAL INJURY.

• REPLACE FRONT AIRBAG SYSTEM COMPONENTS ONLY WITH PARTS SPECIFIED IN THE CHRYSLER MOPAR PARTS CATALOG. SUBSTITUTE PARTS MAY APPEAR INTERCHANGEABLE, BUT INTERNAL DIFFERENCES MAY RESULT IN INFERIOR OCCUPANT PROTECTION.

• THE FASTENERS, SCREWS, AND BOLTS ORIGINALLY USED FOR THE FRONT AIRBAG SYSTEM COMPONENTS HAVE SPECIAL COATINGS AND ARE SPECIFICALLY DESIGNED FOR THE FRONT AIRBAG SYSTEM. THEY MUST NEVER BE REPLACED WITH ANY SUBSTITUTES. ANY TIME A NEW FASTENER IS NEEDED, REPLACE IT WITH THE CORRECT FASTENERS PROVIDED IN THE SERVICE PACKAGE OR SPECIFIED IN THE CHRYSLER MOPAR PARTS CATALOG.

DRIVER AIRBAG MODULE

WARNING: DO NOT PLACE A NON-DEPLOYED AIRBAG FACE DOWN ON A HARD SURFACE, THE AIRBAG WILL PROPEL INTO THE AIR IF ACCIDENTALLY DEPLOYED, AND COULD RESULT IN SERIOUS OR FATAL INJURY.

DESCRIPTION

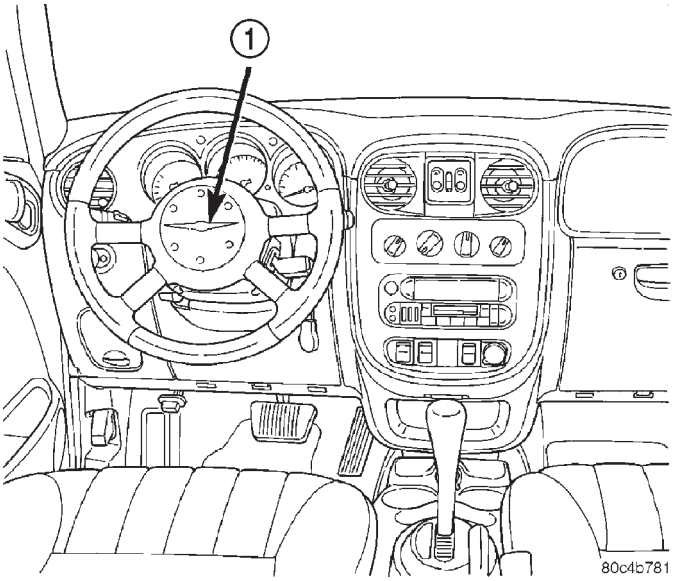

Fig. 4 Driver Airbag Module Location

1 – HORN SWITCH

The driver airbag module protective trim cover is the most visible part of the driver airbag system. The driver airbag module is mounted directly to the steering wheel. Located under the airbag module trim cover are the horn switch, the folded airbag cushion, and the airbag cushion supporting components. The resistive membrane-type horn switch is secured within a plastic tray between the driver airbag module cover and the backer plate which is heat staked on to the driver airbag module cover.

The driver airbag module cannot be repaired, and must be replaced if deployed or in any way damaged.

DESCRIPTION AND OPERATION (Continued)

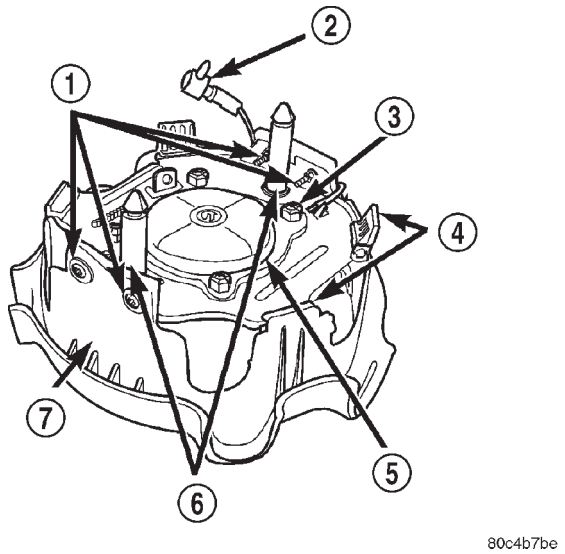

Fig. 5 Driver Airbag Module/Cover/Horn Switch

1 – AIRBAG COVER/HORN SWITCH RETAINING SCREWS
2 – HORN SWITCH BATTERY FEED
3 – HORN SWITCH GROUND
4 – COVER/SWITCH RETAINING CLIPS
5 – INFLATOR
6 – AIRBAG MODULE RETAINING PINS
7 – AIRBAG MODULE/COVER/HORN SWITCH

The driver airbag module trim cover and the horn switch are available for service replacement.

OPERATION

The driver airbag module includes a stamped metal housing to which the cushion and an inflator unit are attached and sealed. The conventional pyrotechnic-type inflator assembly is mounted to studs on the back of the airbag module housing. The inflator seals the hole in the airbag cushion so it can discharge the gas it produces directly into the cushion when supplied with the proper electrical signal. Following an airbag deployment, the airbag cushion quickly deflates by venting this gas towards the instrument panel through the porous fabric material used on the steering wheel side of the airbag cushion.

The protective trim cover is fitted to the front of the airbag module and forms a decorative cover in the center of the steering wheel. The inside of the trim cover has locking blocks molded into it that engage a lip on the airbag module metal housing. Two stamped metal retainers then fit over the inflator mounting studs on the back of the airbag module housing and are engaged in slots on the inside of the cover, securely locking the trim cover into place. The trim cover will split at predetermined breakout lines, then fold back out of the way along with the horn switch and tray unit upon airbag deployment.

PASSENGER AIRBAG MODULE

WARNING: DO NOT PLACE A NON-DEPLOYED AIRBAG FACE DOWN ON A HARD SURFACE, THE AIRBAG WILL PROPEL INTO THE AIR IF ACCIDENTALLY DEPLOYED, AND COULD RESULT IN SERIOUS OR FATAL INJURY.

DESCRIPTION

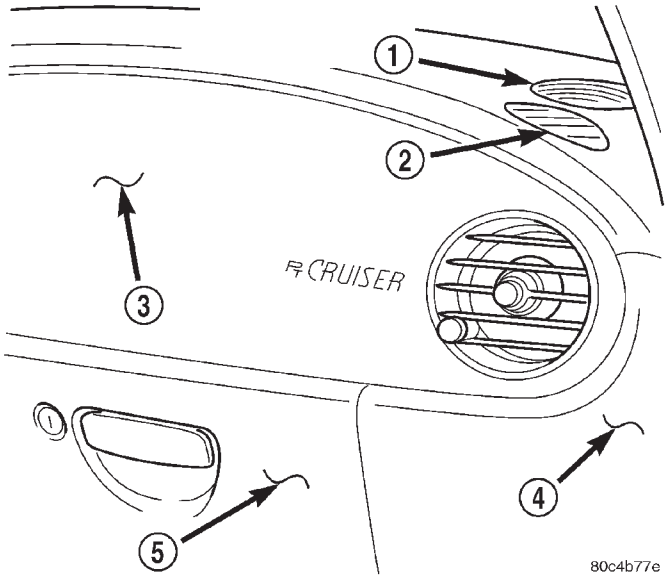

Fig. 6 Passenger Airbag Module Location

1 – INSTRUMENT PANEL SPEAKER
2 – SIDE WINDOW DEMISTER
3 – PASSENGER AIRBAG MODULE
4 – RIGHT INSTRUMENT PANEL END COVER
5 – GLOVE BOX ASSEMBLY

The passenger airbag module is located behind the passenger airbag module cover, between the glove box and instrument panel top cover.

The passenger airbag module includes a stamped steel housing within which the cushion and inflator are mounted and sealed. Two stamped metal brackets, one on each end of the housing, enclose the cushion and inflator. The mounting scheme consists of two weld studs and a bracket with two tabs off the bottom of the housing.

Following a passenger airbag deployment, the passenger airbag module and the passenger airbag module cover must be replaced. If inspection reveals that the passenger airbag module mounting points on the instrument panel structural duct have been cracked or damaged, the instrument panel assembly must also be replaced. The passenger airbag module cannot be repaired, and must be replaced if deployed or in any way damaged.

DESCRIPTION AND OPERATION (Continued)

OPERATION

The hybrid-type inflator assembly includes a small canister of highly compressed argon gas. The inflator seals the hole in the airbag cushion so it can discharge the gas it produces directly into the cushion when supplied with the proper electrical signal. Following an airbag deployment, the airbag cushion quickly deflates by venting this gas through the porous fabric material used on each end panel of the airbag cushion.

The passenger airbag module is secured with screws to the instrument panel structural duct beneath the instrument panel top pad and above the glove box opening.

DIAGNOSIS AND TESTING

AIRBAG SYSTEM

(1) Disconnect and isolate the battery negative cable (Fig. 7).

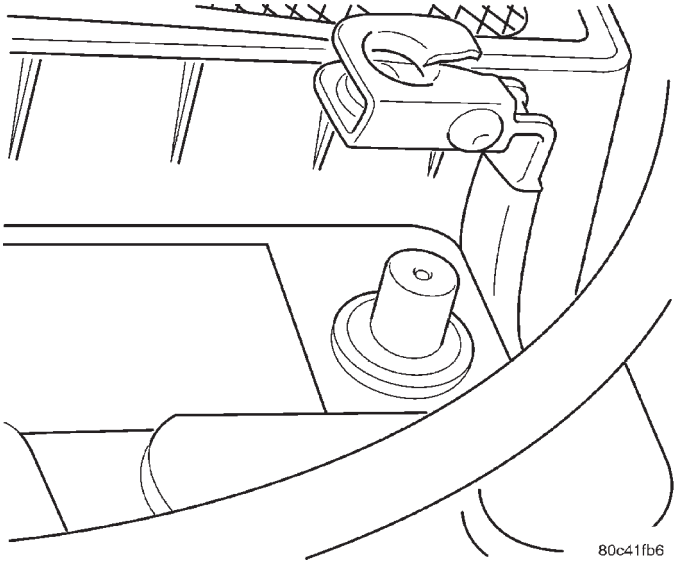

Fig. 7 Battery Negative Cable Remove/Install

(2) Connect the DRBIII® scan tool to the Data Link Connector (DLC), located at left side of the steering column and at the lower edge of the lower instrument panel (Fig. 8). Ensure that the latest version is being used.

(3) Turn the ignition key to ON position. Exit vehicle with the DRBIII® scan tool.

(4) After checking that no one is inside the vehicle, connect the battery negative cable (Fig. 7).

(5) Using the DRBIII® scan tool, read and record active Diagnostic Trouble Code (DTC) data.

(6) Read and record any stored DTC's.

(7) Refer to the proper Body Diagnostic Procedures manual if any DTC's are found in Step 5 or Step 6.

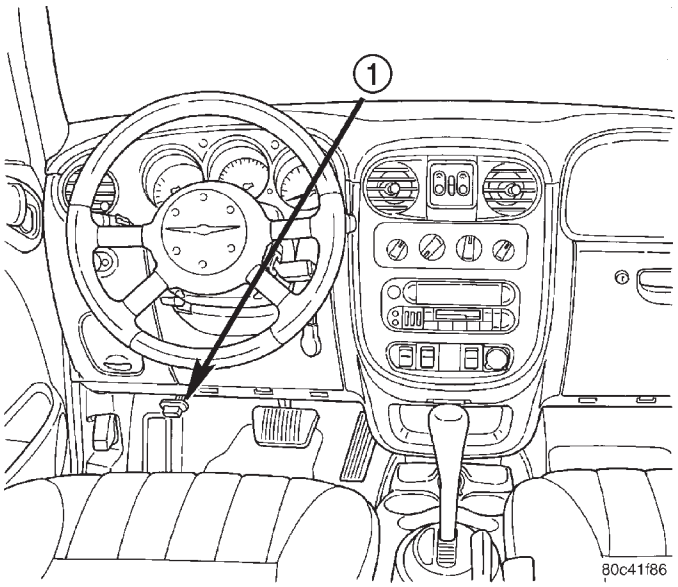

Fig. 8 Data Link Connector (DLC) Location

1 – DATA LINK CONNECTOR (DLC)

(8) Erase stored DTC's if there are no active DTC's. If problems remain, DTC's will not erase. Refer to the proper Body Diagnostic Procedures manual to diagnose the problem.

NOTE: If the airbag warning lamp either fails to light, or goes ON and stays ON, there is a system malfunction. Refer to the proper Body Diagnostic Procedures manual to diagnose the problem.

SERVICE PROCEDURES

HANDLING AIRBAG MODULES

DEPLOYED AIRBAG MODULE

The vehicle interior may contain a very small amount of sodium hydroxide powder, a by-product of airbag deployment. Sodium hydroxide powder can irritate the skin, eyes, nose and throat. Wear safety glasses, rubber gloves, and long sleeved clothing when cleaning any of the powder residue from the vehicle.

WARNING: IF YOU FIND THAT THE CLEAN UP IS IRRITATING YOUR SKIN, RUN COOL WATER OVER THE AFFECTED AREA. ALSO, IF YOU EXPERIENCE NASAL OR THROAT IRRITATION, EXIT THE VEHICLE FOR FRESH AIR UNTIL THE IRRITATION CEASES. IF IRRITATION CONTINUES, SEE A PHYSICIAN.

SERVICE PROCEDURES (Continued)

NON-DEPLOYED AIRBAG MODULE

WARNING:

- **DO NOT PLACE A NON-DEPLOYED AIRBAG FACE DOWN ON A HARD SURFACE, THE AIRBAG WILL PROPEL INTO THE AIR IF ACCIDENTALLY DEPLOYED, AND COULD RESULT IN SERIOUS OR FATAL INJURY.**
- **THE AIRBAG MODULE MUST BE STORED IN ITS ORIGINAL SPECIAL CONTAINER UNTIL USED FOR SERVICE. AT NO TIME SHOULD A SOURCE OF ELECTRICITY BE PERMITTED NEAR THE INFLATOR ON THE BACK OF AN AIRBAG MODULE. WHEN CARRYING OR HANDLING AN NON-DEPLOYED AIRBAG MODULE, THE TRIM SIDE OF THE AIRBAG SHOULD BE POINTING AWAY FROM THE BODY TO MINIMIZE POSSIBILITY OF INJURY IF ACCIDENTAL DEPLOYMENT OCCURS. DO NOT PLACE NON-DEPLOYED AIRBAG FACE DOWN ON A SOLID SURFACE, THE AIRBAG WILL PROPEL INTO THE AIR IF ACCIDENTALLY DEPLOYMENT OCCURS.**

REMOVAL AND INSTALLATION

WARNINGS AND PRECAUTIONS

WARNING:

- **THE FRONT AIRBAG SYSTEM IS A SENSITIVE, COMPLEX ELECTRO–MECHANICAL UNIT. DISCONNECT AND ISOLATE THE BATTERY NEGATIVE CABLE BEFORE BEGINNING AIRBAG SYSTEM COMPONENT REMOVAL OR INSTALLATION PROCEDURES. ALLOW SYSTEM CAPACITOR TO DISCHARGE FOR TWO MINUTES BEFORE REMOVING FRONT AIRBAG COMPONENTS. THIS WILL DISABLE THE FRONT AIRBAG SYSTEM. FAILURE TO DISCONNECT THE BATTERY COULD RESULT IN ACCIDENTAL FRONT AIRBAG DEPLOYMENT AND POSSIBLE PERSONAL INJURY.**
- **DO NOT PLACE AN INTACT, NON-DEPLOYED FRONT AIRBAG MODULE FACE DOWN ON A SOLID SURFACE. THE AIRBAG MODULE WILL PROPEL INTO THE AIR IF ACCIDENTALLY DEPLOYED AND COULD RESULT IN PERSONAL INJURY. WHEN CARRYING OR HANDLING A NON-DEPLOYED FRONT AIRBAG MODULE, THE TRIM SIDE OF THE AIRBAG SHOULD BE POINTING AWAY FROM THE BODY TO MINIMIZE POSSIBILITY OF INJURY IF ACCIDENTAL DEPLOYMENT OCCURS.**
- **REPLACE FRONT AIRBAG SYSTEM COMPONENTS WITH MOPAR® REPLACEMENT PARTS. SUBSTITUTE PARTS MAY APPEAR INTERCHANGEABLE, BUT INTERNAL DIFFERENCES MAY RESULT IN INFERIOR OCCUPANT PROTECTION.**
- **WEAR SAFETY GLASSES, RUBBER GLOVES, AND LONG SLEEVE CLOTHING WHEN CLEANING POWDER RESIDUE FROM VEHICLE AFTER FRONT AIRBAG DEPLOYMENT. SODIUM HYDROXIDE POWDER RESIDUE EMITTED FROM A DEPLOYED FRONT AIRBAG CAN CAUSE SKIN IRRITATION. FLUSH AFFECTED AREA WITH COOL WATER IF IRRITATION IS EXPERIENCED. IF NASAL OR THROAT IRRITATION IS EXPERIENCED, EXIT THE VEHICLE FOR FRESH AIR UNTIL THE IRRITATION CEASES. IF IRRITATION CONTINUES, SEE A PHYSICIAN.**
- **DO NOT USE A REPLACEMENT FRONT AIRBAG MODULE THAT IS NOT IN THE ORIGINAL PACKAGING. IMPROPER DEPLOYMENT AND PERSONAL INJURY CAN RESULT.**
- **THE FACTORY INSTALLED FASTENERS, SCREWS AND BOLTS USED TO FASTEN FRONT AIRBAG COMPONENTS HAVE A SPECIAL COATING AND ARE SPECIFICALLY DESIGNED FOR THE FRONT AIRBAG SYSTEM. DO NOT USE SUBSTITUTE FASTENERS. USE ONLY ORIGINAL EQUIPMENT FASTENERS LISTED IN THE PARTS CATALOG WHEN FASTENER REPLACEMENT IS REQUIRED.**
- **FRONT AIRBAG MODULES SHOULD BE STORED IN A COOL DRY LOCATION, AWAY FROM EXCESSIVE HEAT AND STATIC ELECTRICAL ACTIVITY, WITH THE FABRIC AIRBAG FACING UP. A PREMATURE DEPLOYMENT COULD RESULT.**

NOTE: If the Driver/Passenger Airbag Module is defective and not deployed, refer to Chrysler Corporation current return list for proper handling procedures.

REMOVAL AND INSTALLATION (Continued)

OCCUPANT RESTRAINT CONTROLLER (ORC)

WARNING: THE ORC CONTAINS THE SENSING ELEMENT AND A SAFING SENSOR WHICH ENABLES THE SYSTEM TO DEPLOY THE FRONT AIRBAGS. TO AVOID ACCIDENTAL DEPLOYMENT, NEVER CONNECT THE ORC ELECTRICALLY TO THE SYSTEM WHILE THE VEHICLE BATTERY IS CONNECTED.

DISCONNECT AND ISOLATE THE BATTERY NEGATIVE (GROUND) CABLE BEFORE BEGINNING ANY FRONT AIRBAG SYSTEM COMPONENT REMOVAL OR INSTALLATION PROCEDURE. THIS WILL DISABLE THE FRONT AIRBAG SYSTEM. FAILURE TO DISCONNECT BATTERY COULD RESULT IN ACCIDENTAL FRONT AIRBAG DEPLOYMENT AND POSSIBLE PERSONAL INJURY.

ALLOW THE FRONT AIRBAG SYSTEM CAPACITOR TO DISCHARGE FOR TWO MINUTES BEFORE REMOVING ANY FRONT AIRBAG SYSTEM COMPONENTS.

REMOVAL

(1) Open hood.

(2) Disconnect and isolate the battery negative cable (Fig. 7).

(3) Remove center console. Refer to Body, Floor Console Removal and Installation.

(4) Remove module mounting nuts and remove module (Fig. 9).

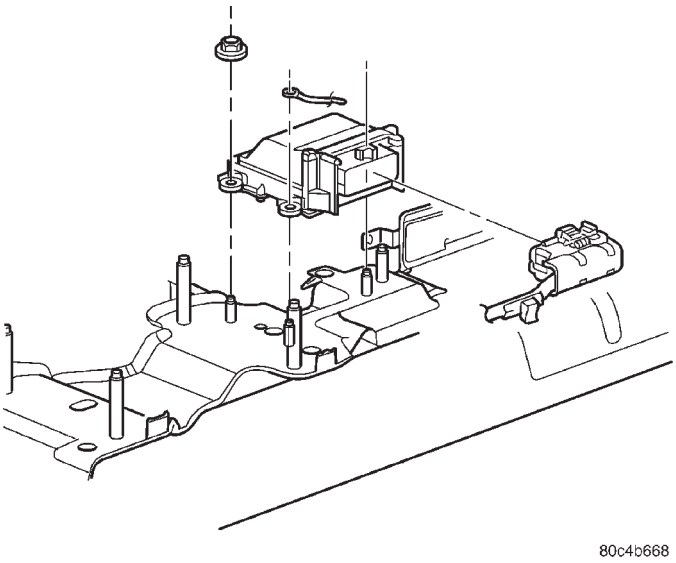

Fig. 9 Occupant Restraint Controller (ORC) Remove/Install

(5) Disconnect ORC 23-way connector.

(6) Remove ORC from vehicle.

INSTALLATION

(1) Connect ORC connector and ensure that the connector and all locking tabs are engaged.

CAUTION: USE SUPPLIED NUTS ONLY

(2) Position ORC (arrow pointing forward) in the console floor bracket (Fig. 9), attach the nuts and tighten to 9.6 to 14 N·m (85 to 125 in. lbs.) torque.

(3) Install center console assembly. Refer to Body, Floor Console Removal and Installation.

WARNING: DO NOT CONNECT BATTERY NEGATIVE CABLE YET. REFER FIRST TO DIAGNOSIS AND TESTING, AIRBAG SYSTEM TEST.

(4) Close hood.

(5) Verify vehicle and system operation.

CLOCKSPRING

WARNING:

- **DO NOT PLACE A NON-DEPLOYED AIRBAG FACE DOWN ON A HARD SURFACE, THE AIRBAG WILL PROPEL INTO THE AIR IF ACCIDENTALLY DEPLOYED, AND COULD RESULT IN SERIOUS OR FATAL INJURY.**
- **DISCONNECT AND ISOLATE THE BATTERY NEGATIVE (GROUND) CABLE BEFORE BEGINNING ANY FRONT AIRBAG SYSTEM COMPONENT REMOVAL OR INSTALLATION. THIS WILL DISABLE THE FRONT AIRBAG SYSTEM. FAILURE TO DISCONNECT THE BATTERY COULD RESULT IN ACCIDENTAL FRONT AIRBAG DEPLOYMENT AND POSSIBLE PERSONAL INJURY.**
- **ALLOW FRONT AIRBAG SYSTEM CAPACITOR TO DISCHARGE FOR TWO MINUTES BEFORE REMOVING ANY FRONT AIRBAG SYSTEM COMPONENTS.**

REMOVAL

(1) Place the front road wheels in the straight ahead position then:

- Rotate the steering wheel half turn (180 degrees) to the right (clockwise).
- Lock column with ignition lock cylinder.

(2) Open hood.

(3) Disconnect and isolate the battery negative cable (Fig. 7).

(4) Wait two minutes for the reserve capacitor to discharge before removing non-deployed module.

(5) Remove steering wheel. Refer to Steering Wheel Removal and Installation in this section.

(6) Remove upper and lower steering column shrouds to gain access to clockspring wiring. Refer to

REMOVAL AND INSTALLATION (Continued)

Instrument Panel Systems, Steering Column Shroud Removal and Installation.

(7) Remove multi-function switch. Refer to Turn Signal and Hazard Warning Systems, Multi-Function Switch Removal and Installation.

(8) Disconnect the 7-way connector between the clockspring and the instrument panel wiring harness at the base of the clockspring.

(9) Remove clockspring by lifting the top latch tab up slightly to guide it over the lock housing (Fig. 10). The clockspring cannot be repaired, and must be replaced if faulty.

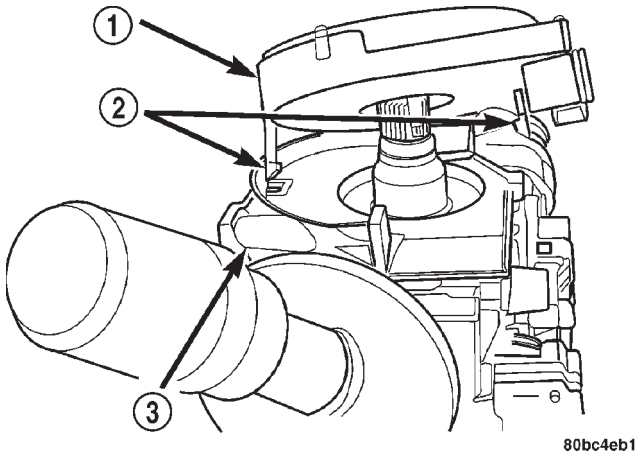

Fig. 10 Clockspring Latch Hooks

1 – CLOCKSPRING
2 – LATCH HOOKS
3 – STEERING COLUMN

(10) Rotate clockspring rotor a half turn (180 degrees) to the left (counter clockwise).

(11) Lock the clockspring rotor in the center position as follows: Insert a paper clip wire through the hole in the rotor at the 10 O'clock position and bend to prevent it from falling out.

INSTALLATION

(1) Confirm that:

- The steering wheel position is a half turn (180 degrees) to the right (clockwise)
- The column is locked with the ignition cylinder lock.
- Check that the turn signal stalk is in the neutral position
- When reusing the clockspring, remove locking wire and rotate clockspring rotor one half turn (180 degrees) to the right (clockwise). Locate the clockspring on the steering shaft and push down on the rotor until the clockspring is fully seated on the steering column (Fig. 10).
- When installing a new clockspring, position the front wheels straight a head. Remove grenade pin.

(2) Connect the clockspring to the instrument panel harness, ensure wiring is properly routed. Then check that the connectors, locking tabs are properly engaged and the halo lamp wire is in position.

(3) Install steering column shrouds. Be sure all wires are inside of shrouds.

(4) Install steering wheel ensuring the flats on hub align with the clockspring. Pull the horn, airbag and speed control leads through the larger slot. Ensure leads do not get pinched under the steering wheel.

(5) Route speed control wires under and behind the airbag module mounting tabs.

(6) Connect the speed control wires to the switch.

(7) Connect the horn lead wire and the airbag lead wire to the airbag module.

(8) Install the airbag module.

WARNING: DO NOT CONNECT BATTERY NEGATIVE CABLE YET. REFER FIRST TO DIAGNOSIS AND TESTING, AIRBAG SYSTEM TEST.

(9) Close hood.

(10) Verify vehicle and system operation.

DRIVER AIRBAG MODULE

WARNING:

- **DO NOT PLACE A NON-DEPLOYED AIRBAG FACE DOWN ON A HARD SURFACE, THE AIRBAG WILL PROPEL INTO THE AIR IF ACCIDENTALLY DEPLOYED, AND COULD RESULT IN SERIOUS OR FATAL INJURY.**
- **DISCONNECT AND ISOLATE THE BATTERY NEGATIVE (GROUND) CABLE BEFORE BEGINNING ANY FRONT AIRBAG SYSTEM COMPONENT REMOVAL OR INSTALLATION. THIS WILL DISABLE THE FRONT AIRBAG SYSTEM. FAILURE TO DISCONNECT THE BATTERY COULD RESULT IN ACCIDENTAL FRONT AIRBAG MODULE DEPLOYMENT AND POSSIBLE PERSONAL INJURY.**
- **DO NOT PLACE A NON-DEPLOYED AIRBAG FACE DOWN ON A HARD SURFACE, THE AIRBAG WILL PROPEL INTO THE AIR IF ACCIDENTALLY DEPLOYED, AND COULD RESULT IN SERIOUS OR FATAL INJURY.**
- **ALLOW FRONT AIRBAG SYSTEM CAPACITOR TO DISCHARGE FOR TWO MINUTES BEFORE REMOVING ANY FRONT AIRBAG SYSTEM COMPONENTS.**

REMOVAL AND INSTALLATION (Continued)

REMOVAL

WARNING: WHEN REMOVING A DEPLOYED MODULE, RUBBER GLOVES, EYE PROTECTION AND LONG SLEEVED SHIRT SHOULD BE WORN, AS THERE MAY BE DEPOSITS ON THE SURFACE WHICH COULD IRRITATE THE SKIN AND EYES.

(1) Open hood.

(2) Disconnect and isolate the battery negative cable (Fig. 7).

(3) Remove the upper and lower steering column shrouds. Refer to Instrument Panel Systems, Removal and Installation, Steering Column Shrouds.

(4) Using a pair of 90° internal snap ring pliers or equivalent, pry open the retaining clip (Fig. 11) on the back of the steering wheel to release the retaining pin (Fig. 12). Pull or press rearward on the airbag module while doing this. The pin will release slightly.

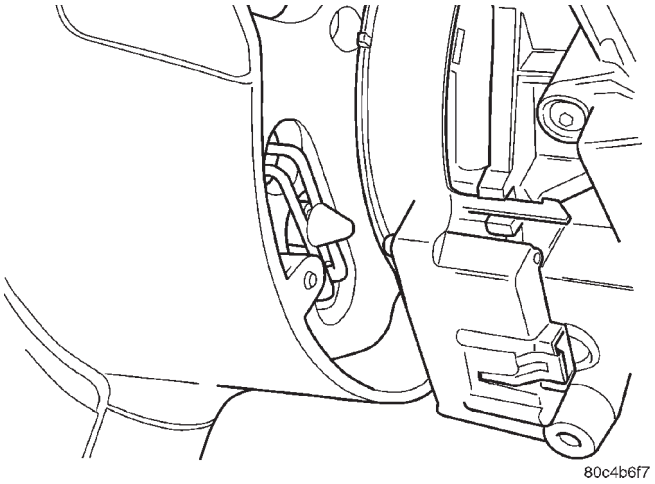

Fig. 11 Driver Airbag Pin Retaining Clip

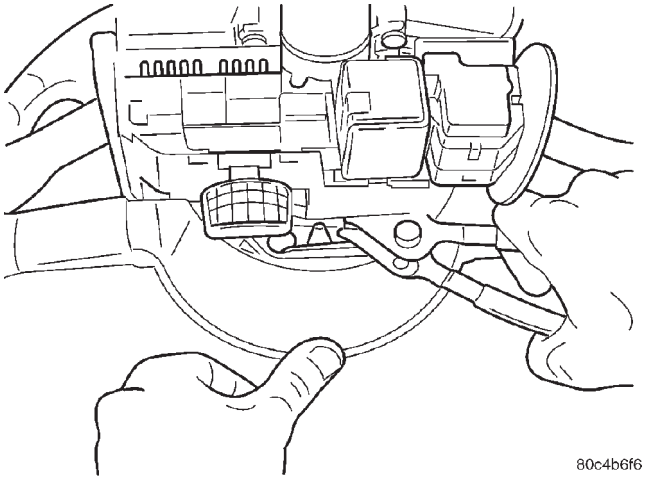

Fig. 12 First Driver Airbag Pin Retaining Clip Remove/Install

(5) Using a pair of 90° internal snap ring pliers or equivalent, pry open the retaining clip (Fig. 13) and at he same time gently pry the pin away from the retaining clip, using a pocket screwdriver or equivalent, so it can slide through the middle of the clip. Use the screwdriver to push the pin through the clip.

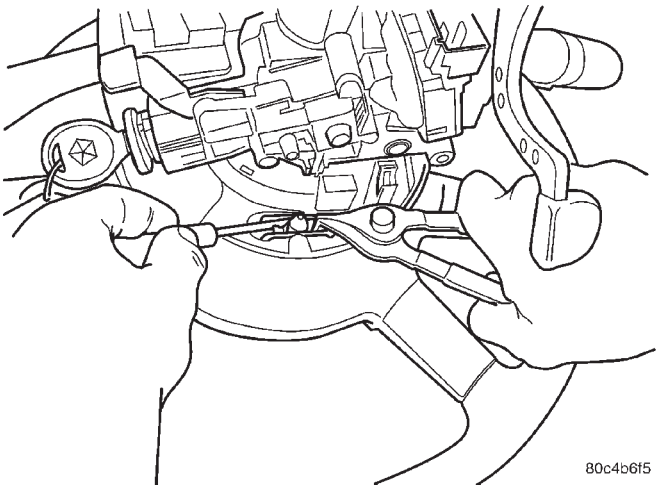

Fig. 13 Second Driver Airbag Pin Retaining Clip Remove/Install

(6) With the driver airbag module released from the steering wheel peel rearward and expose the underside of the module. Disconnect the two harness connectors, squib and horn feed (Fig. 14).

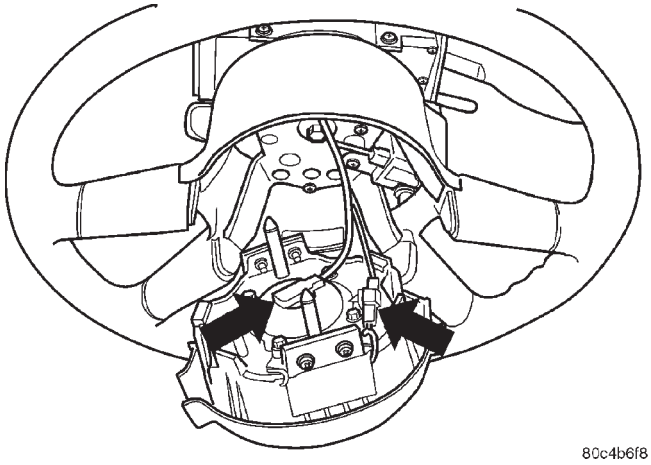

Fig. 14 Driver Airbag Module Electrical Connectors Remove/Install

(7) Remove module from vehicle.

WARNING: WHEN REPLACING A DEPLOYED DRIVER AIRBAG MODULE, THE CLOCKSPRING MUST ALSO BE REPLACED. REFER TO CLOCKSPRING REMOVAL AND INSTALLATION IN THIS SECTION.

REMOVAL AND INSTALLATION (Continued)

INSTALLATION

(1) Connect the squib wire to the module. Make airbag connection by pressing straight in on the connector. The connector should be fully seated. Feel for positive snap to assure positive connection.

(2) Connect the horn wire.

(3) **Rotate the steering wheel 90° left or right.**

(4) Place driver airbag module into position and firmly snap both pins into place. **Listen for the audible click at each pin. Visually check that both pins are properly seated between the legs of the clips.**

(5) Install the upper and lower steering column shrouds. Refer to Instrument Panel Systems, Removal and Installation, Steering Column Shrouds.

WARNING: DO NOT CONNECT BATTERY NEGATIVE CABLE YET. REFER FIRST TO DIAGNOSIS AND TESTING, AIRBAG SYSTEM TEST.

(6) Close hood.

(7) Verify vehicle and system operation.

PASSENGER AIRBAG MODULE/COVER

WARNING:

- **DISCONNECT AND ISOLATE THE BATTERY NEGATIVE (GROUND) CABLE BEFORE BEGINNING ANY FRONT AIRBAG SYSTEM COMPONENT REMOVAL OR INSTALLATION. THIS WILL DISABLE THE FRONT AIRBAG SYSTEM. FAILURE TO DISCONNECT THE BATTERY COULD RESULT IN ACCIDENTAL FRONT AIRBAG MODULE DEPLOYMENT AND POSSIBLE PERSONAL INJURY.**
- **ALLOW THE FRONT AIRBAG SYSTEM CAPACITOR TO DISCHARGE FOR TWO MINUTES BEFORE REMOVING ANY FRONT AIRBAG SYSTEM COMPONENTS.**

NON-DEPLOYED MODULE

WARNING: DO NOT PLACE A NON-DEPLOYED AIRBAG FACE DOWN ON A HARD SURFACE, THE AIRBAG WILL PROPEL INTO THE AIR IF ACCIDENTALLY DEPLOYED, AND COULD RESULT IN SERIOUS OR FATAL INJURY.

REMOVAL

(1) Open hood.

(2) Disconnect and isolate the battery negative cable (Fig. 7).

(3) Wait two minutes for the reserve capacitor to discharge before removing non-deployed module.

(4) Remove instrument panel top cover. Refer to Instrument Panel Systems, Instrument Panel Top Cover Removal and Installation.

(5) Open glove box, push in on the box/bin sides and lower to floor.

(6) Remove the right instrument panel end cap. Refer to Instrument Panel Systems, Removal and Installation, Instrument Panel End Cap.

(7) Remove four passenger airbag cover screws along the bottom end of the airbag cover.

(8) Remove two passenger airbag cover screws along the top edge of the airbag cover.

(9) Remove two nuts retaining passenger airbag to instrument panel assembly inside glove box opening (Fig. 15).

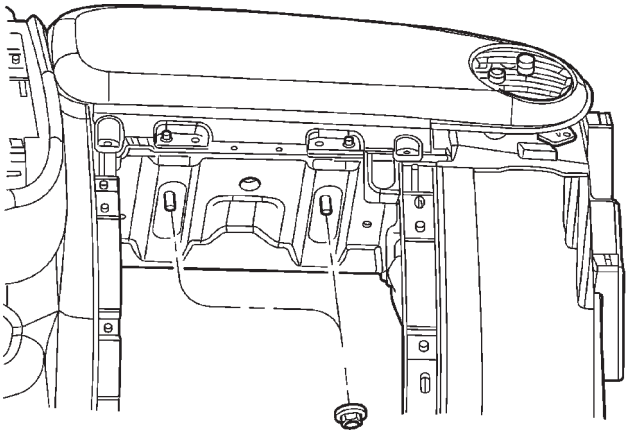

Fig. 15 Passenger Airbag Module Retaining Nuts Remove/Install

(10) Lift module up until the wire connector is visible and disconnect the 4-way wire connector from module. Unlock the red locking tab and compress lock to release the connector (Fig. 16).

(11) Remove passenger airbag module from vehicle.

INSTALLATION

(1) Place module into instrument panel opening, connect the 4-way wire connector, and lock the red locking tab (Fig. 16).

(2) Install the two nuts retaining passenger airbag to instrument panel assembly inside glove box opening (Fig. 15). Torque the two module retaining nuts to 22 to 34 N·m (200 to 300 in. lbs.) torque.

(3) Install two passenger airbag cover screws along the top edge of the airbag cover. Torque trim screws to 2 N·m (20 in. lbs.).

(4) Install four passenger airbag cover screws along the bottom end of the airbag cover. Torque trim screws to 2 N·m (20 in. lbs.).

REMOVAL AND INSTALLATION (Continued)

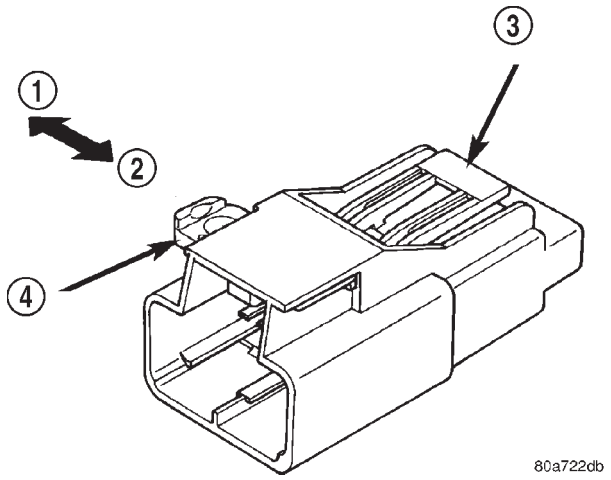

Fig. 16 Passenger Airbag Module Electrical Connector

1 – UNLOCK
2 – LOCK
3 – PRESS LOCK
4 – RED LOCKING TAB

(5) Install the right instrument panel end cap. Refer to Instrument Panel Systems, Removal and Installation, Instrument Panel End Cap.

(6) Push in on the box/bin sides and close glove box door.

(7) Install instrument panel top cover. Refer to Instrument Panel Systems, Instrument Panel Top Cover Removal and Installation.

WARNING: DO NOT CONNECT BATTERY NEGATIVE CABLE YET. REFER FIRST TO DIAGNOSIS AND TESTING, AIRBAG SYSTEM TEST.

(8) Close hood.

(9) Verify vehicle and system operation.

PASSENGER AIRBAG MODULE COVER

REMOVAL

(1) Open hood.

(2) Disconnect and isolate the battery negative cable (Fig. 7).

(3) Remove the Passenger Airbag Module from the vehicle. Refer to Passenger Airbag Module/Cover Removal and Installation.

(4) Unsnap cover from passenger airbag module and remove.

INSTALLATION

(1) Snap cover onto the passenger airbag module frame.

(2) Install the Passenger Airbag Module. Refer to Passenger Airbag Module/Cover Removal and Installation.

WARNING: DO NOT CONNECT BATTERY NEGATIVE CABLE YET. REFER FIRST TO DIAGNOSIS AND TESTING, AIRBAG SYSTEM TEST.

(3) Close hood.

(4) Verify vehicle and system operation.

DEPLOYED MODULE

REMOVAL

When removing a deployed module, rubber gloves, eye protection, and a long-sleeved shirt should be worn, as there may be deposits on the surface which could irritate the skin and eyes.

(1) Open hood.

(2) Disconnect and isolate the battery negative cable (Fig. 7).

(3) Roll/fold airbag towards instrument panel.

(4) Close door over folded airbag and tape door closed.

(5) Remove instrument panel top cover. Refer to Instrument Panel Systems, Instrument Panel Top Cover Removal and Installation.

(6) Open glove box, push in on the box/bin sides and lower to floor.

(7) Remove the right instrument panel end cap. Refer to Instrument Panel Systems, Removal and Installation, Instrument Panel End Cap.

(8) Remove four passenger airbag cover screws along the bottom end of the airbag cover.

(9) Remove two passenger airbag cover screws along the top edge of the airbag cover.

(10) Remove two nuts retaining passenger airbag to instrument panel assembly inside glove box opening (Fig. 15).

(11) Lift module up until the wire connector is visible and disconnect the 4-way wire connector from module. Unlock the red locking tab and compress lock to release the connector (Fig. 16).

(12) Remove passenger airbag module from vehicle.

INSTALLATION

(1) Place module into instrument panel opening, connect the 4-way wire connector, and lock the red locking tab (Fig. 16).

(2) Install the two nuts retaining passenger airbag to instrument panel assembly inside glove box opening (Fig. 15). Torque the two module retaining nuts to 22 to 34 N·m (200 to 300 in. lbs.) torque.

(3) Install two passenger airbag cover screws along the top edge of the airbag cover. Torque trim screws to 2 N·m (20 in. lbs.).

REMOVAL AND INSTALLATION (Continued)

(4) Install four passenger airbag cover screws along the bottom end of the airbag cover. Torque trim screws to 2 N·m (20 in. lbs.).

(5) Install the right instrument panel end cap. Refer to Instrument Panel Systems, Removal and Installation, Instrument Panel End Cap.

(6) Push in on the box/bin sides and close glove box door.

(7) Install instrument panel top cover. Refer to Instrument Panel Systems, Instrument Panel Top Cover Removal and Installation.

WARNING: DO NOT CONNECT BATTERY NEGATIVE CABLE YET. REFER FIRST TO DIAGNOSIS AND TESTING, AIRBAG SYSTEM TEST.

(8) Close hood.

(9) Verify vehicle and system operation.

STEERING WHEEL

WARNING:

- **DO NOT PLACE A NON-DEPLOYED AIRBAG FACE DOWN ON A HARD SURFACE, THE AIRBAG WILL PROPEL INTO THE AIR IF ACCIDENTALLY DEPLOYED, AND COULD RESULT IN SERIOUS OR FATAL INJURY.**
- **DISCONNECT AND ISOLATE THE BATTERY NEGATIVE (GROUND) CABLE BEFORE BEGINNING STEERING WHEEL REMOVAL OR INSTALLATION. THIS WILL DISABLE THE FRONT AIRBAG SYSTEM. FAILURE TO DISCONNECT THE BATTERY COULD RESULT IN ACCIDENTAL FRONT AIRBAG MODULE DEPLOYMENT AND POSSIBLE PERSONAL INJURY.**
- **ALLOW THE FRONT AIRBAG SYSTEM CAPACITOR TO DISCHARGE FOR TWO MINUTES BEFORE REMOVING THE STEERING WHEEL OR ANY FRONT AIRBAG SYSTEM COMPONENT.**

REMOVAL

(1) Adjust the steering wheel so that the tires are in the straight ahead position. Then:

(a) Rotate the steering wheel half turn (180 degrees) to the right (clockwise).

(b) Lock column with the ignition cylinder lock.

(2) Open hood.

(3) Disconnect and isolate the battery negative cable (Fig. 7).

(4) Remove the driver airbag module. Refer to Driver Airbag Removal and Installation in this section.

(5) Remove the one retaining bolt to the steering wheel (Fig. 17).

(6) Remove the steering wheel with a steering wheel puller. While removing the steering wheel take care to feed the wires gently through the holes in the steering wheel.

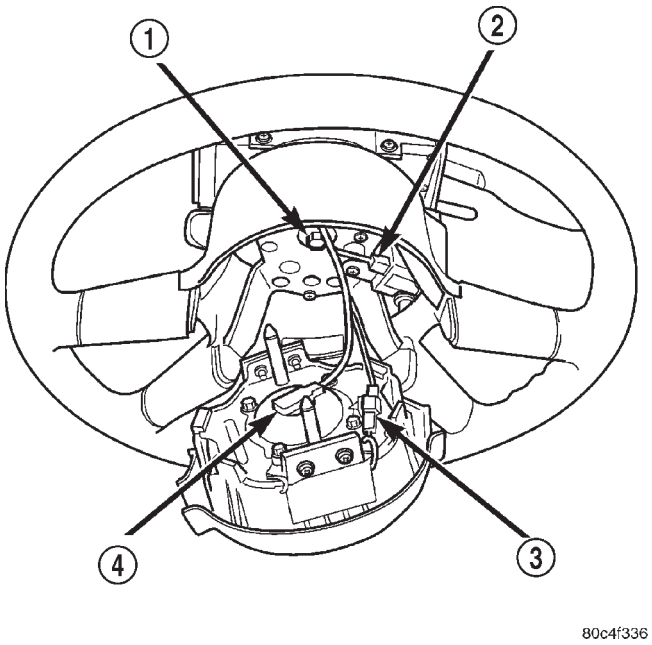

Fig. 17 Steering Wheel Remove/Install

1 – STEERING WHEEL RETAINING BOLT
2 – SPEED CONTROL SWITCH CONNECTOR
3 – HORN SWITCH CONNECTOR
4 – AIRBAG CONNECTOR

INSTALLATION

(1) Confirm that:

(a) The steering wheel position is a half turn (180 degrees) to the right (clockwise).

(b) The column is locked with the ignition cylinder lock.

(c) Check that the turn signal stalk is in the neutral position.

(2) Install the steering wheel ensuring the flats on hub align with the clockspring. Pull the horn lead, airbag and speed control leads through the larger slot. Ensure leads do not get pinched under the steering wheel.

(3) Install the steering wheel retaining bolt, and torque it to 54 N·m (40 ft. lbs.).

(4) Install the driver airbag module. Refer to Driver Airbag Module Removal and Installation in this section.

WARNING: DO NOT CONNECT BATTERY NEGATIVE CABLE YET. REFER FIRST TO DIAGNOSIS AND TESTING, AIRBAG SYSTEM TEST.

(5) Close hood.

(6) Verify vehicle and system operation.

CLEANING AND INSPECTION

CLEAN UP PROCEDURE

Roll or fold the driver airbag towards the steering wheel and tape the airbag module cover over deployed bag.

Roll or fold the passenger airbag towards the instrument panel surface Tape the airbag module cover over deployed bag.

Use a vacuum cleaner to remove any residual powder from the vehicle interior. Work from the outside in to avoid kneeling or sitting in a contaminated area. Vacuum the heater and A/C outlets as well. If the heater or air conditioner was in RECIRC mode at time of airbag deployment, operate blower motor on low speed and vacuum powder residue expelled from the heater and A/C outlets. Multiple vacuum cleaning may to necessary to decontaminate the interior of the vehicle.

SERVICE OF DEPLOYED AIRBAG MODULE

DRIVER AIRBAG MODULE

After a Driver Airbag Module has been deployed the following components must be replaced because they cannot be reused. Other driver airbag system components are replaced if damaged.

- Driver Airbag Module
- Clockspring assembly
- Steering Column Assembly w/Lower Steering Column Coupler

Inspect all the attaching hardware and instrument panel for damage. If damage is evident, components should be replaced.

PASSENGER AIRBAG MODULE

After a Passenger Airbag Module has been deployed, replace the following components because they cannot be reused.

- Passenger Airbag Module
- Passenger Airbag Module Cover

Inspect all the attaching hardware and instrument panel for damage. If damage is evident, components should be replaced.

MAINTENANCE INSPECTION

(1) Check the airbag warning lamp for proper operation as follows:

(a) Turn ignition switch to the ON position, the airbag warning lamp should light. If not, test the system using a DRBIII® scan tool and the proper Body Diagnostic Procedures Manual.

(b) The airbag warning lamp lights, but fails to go out after eight seconds. Test the system using a DRBIII® scan tool and the proper Body Diagnostic Procedures manual.

(c) After correcting active malfunction erase stored Diagnostic Trouble Codes (DTC's).

ADJUSTMENTS

CLOCKSPRING CENTERING PROCEDURE

WARNING: DISCONNECT AND ISOLATE THE BATTERY NEGATIVE (GROUND) CABLE BEFORE BEGINNING ANY SERVICE TP THE FRONT AIRBAG SYSTEM. THIS WILL DISABLE THE FRONT AIRBAG SYSTEM. FAILURE TO DISCONNECT THE BATTERY COULD RESULT IN ACCIDENTAL FRONT AIRBAG MODULE DEPLOYMENT AND POSSIBLE PERSONAL INJURY.

ALLOW THE FRONT AIRBAG SYSTEM CAPACITOR TO DISCHARGE FOR TWO MINUTES BEFORE BEGINNING ANY FRONT AIRBAG SYSTEM SERVICE.

If the rotating tape within the clockspring is not positioned properly with the steering wheel and the front wheels, the clockspring may fail during use. The following procedure **MUST BE USED** to center the clockspring if:

- The clockspring is not known to be properly positioned.
- The front wheels were moved.
- The steering wheel was moved from the half turn (180 degrees) to the right (clockwise) position.

(1) Open hood.

(2) Disconnect and isolate the battery negative cable (Fig. 7).

(3) Remove clockspring. Refer to Clockspring Removal and Installation in this section.

(4) Rotate the clockspring rotor in the CLOCKWISE DIRECTION to the end of travel. Do not apply excessive torque.

(5) From the end of travel, rotate the rotor three full turns in the counterclockwise direction. The horn wire and the squib wire should end up at the bottom. If not, rotate the rotor counter clockwise until the wires are properly orientated, but not more than half turn (180 degrees). Engage clockspring locking mechanism.

(6) For installation, refer to Clockspring Removal and Installation in this section.

WARNING: DO NOT CONNECT BATTERY NEGATIVE CABLE YET. REFER FIRST TO DIAGNOSIS AND TESTING, AIRBAG SYSTEM TEST.

(7) Close hood.

(8) Verify vehicle and system operation.

SIDE AIRBAG SYSTEM

TABLE OF CONTENTS

page

DESCRIPTION AND OPERATION
SIDE IMPACT AIRBAG SYSTEM 15
SIDE IMPACT AIRBAG CONTROL MODULE (SIACM) 15
SIDE IMPACT AIRBAG MODULES 16
DIAGNOSIS AND TESTING
SIDE IMPACT AIRBAG SYSTEM 16

page

REMOVAL AND INSTALLATION
WARNINGS AND PRECAUTIONS. 17
SIDE IMPACT AIRBAG MODULE (DRIVER/PASSENGER) 17
SIDE IMPACT AIRBAG CONTROL MODULE (SIACM) 19

DESCRIPTION AND OPERATION

SIDE IMPACT AIRBAG SYSTEM

DESCRIPTION

Vehicles equipped with the Side Impact Airbag System utilize two airbags mounted to each front seat back frame. This system designed to protect occupants in the event of a side impact collision.

OPERATION

The side impact airbag control module (SIACM) controls the seat back mounted airbags. If the SIACM determines the impact is severe enough, the appropriate airbag/s will inflate, tearing open the front seat back trim cover/s protecting the passenger/s. Once a seat back mounted airbag has been deployed, all damaged parts must be replaced.

WARNING:

- **THE SIDE IMPACT AIRBAG SYSTEM CONTAINS SENSITIVE, COMPLEX ELECTRO-MECHANICAL UNITS. BEFORE ATTEMPTING TO DIAGNOSE OR SERVICE ANY SIDE IMPACT AIRBAG SYSTEM COMPONENTS, YOU MUST FIRST DISCONNECT AND ISOLATE THE BATTERY NEGATIVE (GROUND) CABLE. THIS IS THE ONLY SURE WAY TO DISABLE THE SIDE IMPACT AIRBAG SYSTEM. FAILURE TO DO THIS COULD RESULT IN ACCIDENTAL SIDE IMPACT AIRBAG MODULE DEPLOYMENT AND POSSIBLE PERSONAL INJURY.**
- **DO NOT PLACE A NON-DEPLOYED SIDE AIRBAG FACE DOWN ON A HARD SURFACE, THE AIRBAG WILL PROPEL INTO THE AIR IF ACCIDENTALLY DEPLOYED, AND COULD RESULT IN SERIOUS OR FATAL INJURY.**
- **BEFORE SERVICING A SIDE IMPACT AIRBAG CONTROL MODULE (SIACM), ALWAYS DISCONNECT THE APPROPRIATE (LEFT OR RIGHT) SIDE IMPACT AIRBAG CONNECTOR UNDER THE SEAT TO ENGAGE THE SIDE IMPACT AIRBAG SYSTEM SHORTING BAR TO PREVENT ACCIDENTAL DEPLOYMENT.**
- **DO NOT ATTEMPT TO DISMANTLE A SIDE IMPACT AIRBAG MODULE OR TAMPER WITH ITS INFLATOR. DO NOT PUNCTURE, INCINERATE, OR BRING INTO CONTACT WITH ELECTRICITY. DO NOT STORE AT TEMPERATURES EXCEEDING 93° C (200° F).**
- **REPLACE SIDE IMPACT AIRBAG SYSTEM COMPONENTS ONLY WITH PARTS SPECIFIED IN THE CHRYSLER MOPAR PARTS CATALOG. SUBSTITUTE PARTS MAY APPEAR INTERCHANGEABLE, BUT INTERNAL DIFFERENCES MAY RESULT IN INFERIOR OCCUPANT PROTECTION.**
- **THE FASTENERS, SCREWS, AND BOLTS ORIGINALLY USED FOR THE SIDE IMPACT AIRBAG SYSTEM COMPONENTS HAVE SPECIAL COATINGS AND ARE SPECIFICALLY DESIGNED FOR THE SIDE IMPACT AIRBAG SYSTEM. THEY MUST NEVER BE REPLACED WITH ANY SUBSTITUTES. ANY TIME A NEW FASTENER IS NEEDED, REPLACE IT WITH THE CORRECT FASTENERS PROVIDED IN THE SERVICE PACKAGE OR SPECIFIED IN THE CHRYSLER MOPAR PARTS CATALOG.**

SIDE IMPACT AIRBAG CONTROL MODULE (SIACM)

DESCRIPTION

Vehicles equipped with side impact airbags use two side impact airbag control modules. One is located on each side of the vehicle within the body B-pillar.

OPERATION

Each side impact airbag control module (SIACM) serves as the impact sensor for its seat mounted airbag. The right side SIACM controls the right seat airbag. The left side SIACM controls the left seat air-

DESCRIPTION AND OPERATION (Continued)

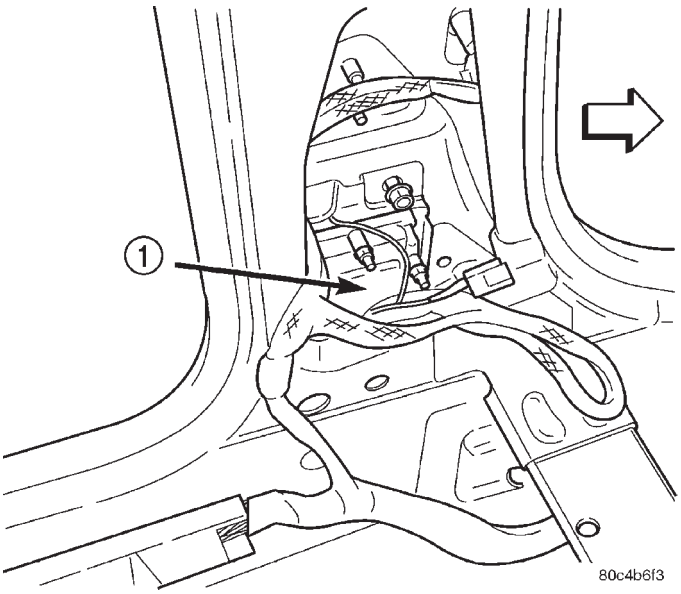

Fig. 1 Side Impact Airbag Control Module (SIACM) Location

1 – SIDE IMPACT AIRBAG CONTROL MODULE

bag. Each SIACM contains two accelerometers, both accelerometers must agree in order to deploy the side airbag. In the event of a side impact, the appropriate SIACM will send a electronic signal to its airbag, deploying the airbag. The SIACM communicates with the Occupant Restraint Controller (ORC) via the PCI bus circuit.

The SIACM perform self-diagnostics and circuit tests to determine if the system is functioning properly. If the test finds a problem, the SIACM will set both active and stored Diagnostic Trouble Codes (DTC's). If a DTC is active, the SIACM will request that the airbag warning lamp be turned on. The results of the system test are transmitted on the PCI bus circuit to the ORC once each second, or on a change in lamp state (ON/OFF). If the warning lamp status message from either SIACM contains a lamp ON request, the ORC will set an active DTC. At the same time as the DTC is set, the ORC sends a PCI bus message to the cluster requesting the airbag warning lamp to be turned ON. Observe all ORC WARNING and CAUTION statements when servicing or handling the SIACM. The SIACM's are not serviceable and must be replaced even if they are dropped.

SIDE IMPACT AIRBAG MODULES

WARNING: DO NOT PLACE A NON-DEPLOYED SIDE AIRBAG FACE DOWN ON A HARD SURFACE, THE AIRBAG WILL PROPEL INTO THE AIR IF ACCIDENTALLY DEPLOYED, AND COULD RESULT IN SERIOUS OR FATAL INJURY.

DESCRIPTION

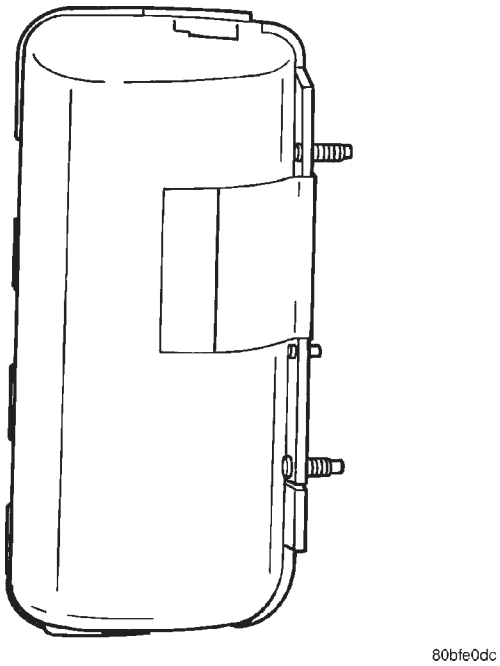

Fig. 2 Side Impact Airbag Module - Typical

The left and right seat airbag modules are located in the outboard end of the front seat backs. The airbag contains a bag, an inflator (small canister of highly compressed gas), and a mounting bracket. the seat airbag module cannot be repaired and must be replaced if deployed or in any way damaged.

OPERATION

When supplied with the proper electrical signal, the inflator seals the hole in the airbag cushion so it can discharge the compressed gas it contains directly into the cushion. Upon deployment, the seat back trim cover will tear open and allow the seat airbag to fully deploy between the seat and the door.

DIAGNOSIS AND TESTING

SIDE IMPACT AIRBAG SYSTEM

Refer to the proper Body Diagnostic Procedures manual.

REMOVAL AND INSTALLATION

WARNINGS AND PRECAUTIONS

WARNING:

- **THIS SYSTEM CONTAINS SENSITIVE, COMPLEX ELECTRO-MECHANICAL UNITS. DISCONNECT AND ISOLATE THE BATTERY NEGATIVE CABLE BEFORE BEGINNING SIDE IMPACT AIRBAG SYSTEM COMPONENT REMOVAL OR INSTALLATION. THIS WILL DISABLE THE SIDE IMPACT AIRBAG SYSTEM. FAILURE TO DISCONNECT THE BATTERY COULD RESULT IN ACCIDENTAL AIRBAG DEPLOYMENT AND POSSIBLE PERSONAL INJURY.**
- **BEFORE SERVICING A SIDE IMPACT AIRBAG CONTROL MODULE (SIACM), ALWAYS DISCONNECT THE APPROPRIATE (LEFT OR RIGHT) SIDE IMPACT AIRBAG CONNECTOR UNDER THE SEAT TO ENGAGE THE SIDE IMPACT AIRBAG SYSTEM SHORTING BAR TO PREVENT ACCIDENTAL DEPLOYMENT.**
- **DO NOT PLACE A NON-DEPLOYED SIDE AIRBAG FACE DOWN ON A HARD SURFACE, THE AIRBAG WILL PROPEL INTO THE AIR IF ACCIDENTALLY DEPLOYED, AND COULD RESULT IN SERIOUS OR FATAL INJURY.**
- **REPLACE SIDE IMPACT AIRBAG SYSTEM COMPONENTS WITH MOPAR® REPLACEMENT PARTS. SUBSTITUTE PARTS MAY APPEAR INTERCHANGEABLE, BUT INTERNAL DIFFERENCES MAY RESULT IN INFERIOR OCCUPANT PROTECTION.**
- **WEAR SAFETY GLASSES, RUBBER GLOVES, AND LONG SLEEVED CLOTHING WHEN CLEANING POWDER RESIDUE FROM VEHICLE AFTER AIRBAG DEPLOYMENT. SODIUM HYDROXIDE POWDER RESIDUE EMITTED FROM A DEPLOYED SIDE IMPACT AIRBAG MODULE CAN CAUSE SKIN IRRITATION. FLUSH AFFECTED AREA WITH COOL WATER IF IRRITATION IS EXPERIENCED. IF NASAL OR THROAT IRRITATION IS EXPERIENCED, EXIT THE VEHICLE FOR FRESH AIR UNTIL THE IRRITATION CEASES. IF IRRITATION CONTINUES, SEE A PHYSICIAN.**
- **DO NOT USE A REPLACEMENT SIDE IMPACT AIRBAG MODULE THAT IS NOT IN THE ORIGINAL PACKAGING, IMPROPER DEPLOYMENT AND PERSONAL INJURY CAN RESULT.**
- **THE FACTORY INSTALLED FASTENERS, SCREWS AND BOLTS USED TO FASTEN SIDE IMPACT AIRBAG SYSTEM COMPONENTS HAVE A SPECIAL COATING AND ARE SPECIFICALLY DESIGNED FOR THE SIDE IMPACT AIRBAG SYSTEM. DO NOT USE SUBSTITUTE FASTENERS, USE ONLY ORIGINAL EQUIPMENT FASTENERS LISTED IN THE PARTS CATALOG WHEN FASTENER REPLACEMENT IS REQUIRED.**
- **SIDE IMPACT AIRBAG MODULES SHOULD BE STORED IN A COOL DRY LOCATION AWAY FROM EXCESSIVE HEAT AND STATIC ELECTRICAL ACTIVITY.**

NOTE: If the Side Impact Airbag Module is defective and non-deployed, refer to Chrysler Corporation current return list for proper handling procedures.

SIDE IMPACT AIRBAG MODULE (DRIVER/ PASSENGER)

CAUTION: Do not replace a deployed side impact airbag module. If side impact airbag module has been deployed, the entire seat and all damaged parts must be replaced.

WARNING:

- **DO NOT PLACE A NON-DEPLOYED SIDE AIRBAG FACE DOWN ON A HARD SURFACE, THE AIRBAG WILL PROPEL INTO THE AIR IF ACCIDENTALLY DEPLOYED, AND COULD RESULT IN SERIOUS OR FATAL INJURY.**
- **DISCONNECT AND ISOLATE THE BATTERY NEGATIVE (GROUND) CABLE BEFORE BEGINNING ANY SIDE IMPACT AIRBAG SYSTEM COMPONENT REMOVAL OR INSTALLATION. THIS WILL DISABLE THE SIDE IMPACT AIRBAG SYSTEM. FAILURE TO DISCONNECT THE BATTERY COULD RESULT IN ACCIDENTAL SIDE IMPACT AIRBAG MODULE DEPLOYMENT AND POSSIBLE PERSONAL INJURY.**
- **BEFORE SERVICING A SIDE IMPACT AIRBAG CONTROL MODULE (SIACM), ALWAYS DISCONNECT THE APPROPRIATE (LEFT OR RIGHT) SIDE IMPACT AIRBAG CONNECTOR UNDER THE SEAT TO ENGAGE THE SIDE IMPACT AIRBAG SYSTEM SHORTING BAR TO PREVENT ACCIDENTAL DEPLOYMENT.**

REMOVAL

(1) Position the left front seat in the full forward position.

(2) Open hood.

(3) Disconnect and isolate the battery negative cable (Fig. 3).

(4) Remove front seat from vehicle. Refer to Body, Front Seat Removal and Installation.

(5) Remove plastic back panel from the seat back (Fig. 4). Refer to Body, Front Seat Back Cover Removal and Installation.

(6) Disengage seat back trim cover J-strap from the upper, lower and airbag side of seat back.

REMOVAL AND INSTALLATION (Continued)

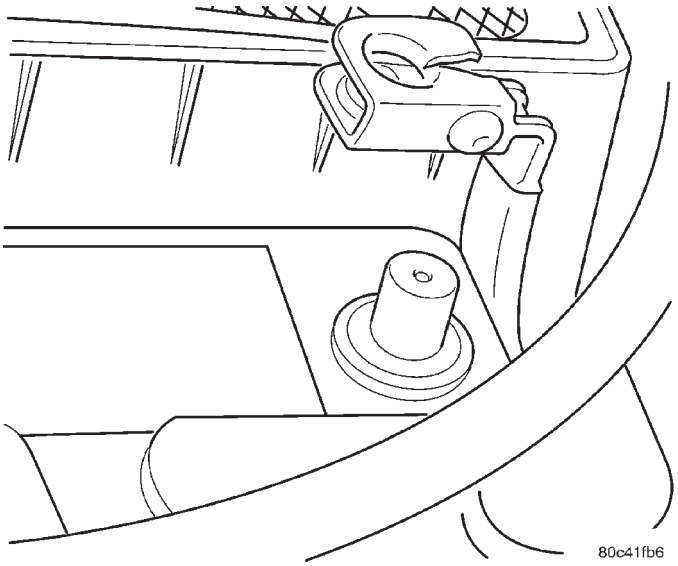

Fig. 3 Battery Negative Cable Remove/Install

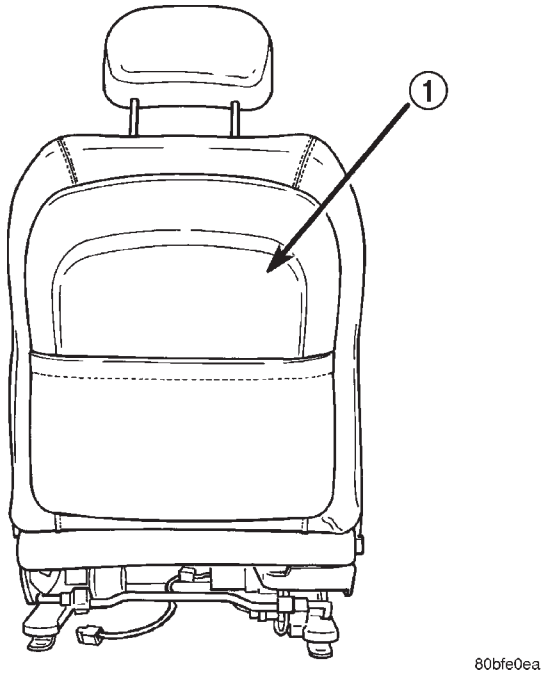

Fig. 4 Front Seat Back Panel - Typical

1 – FRONT SEAT BACK PANEL

(7) Disconnect the side impact airbag module electrical connector (Fig. 5). Slide yellow locking tab down to unlock. Then with two fingers, push two side retaining tabs in and pull connector straight from module.

(8) Remove the side airbag module retaining nuts.

(9) Grasp the upper airbag side of the seat back trim cover and pull trim cover and cushion over top of seat back frame. This will allow room to remove side impact airbag module without damaging trim cover or cushion.

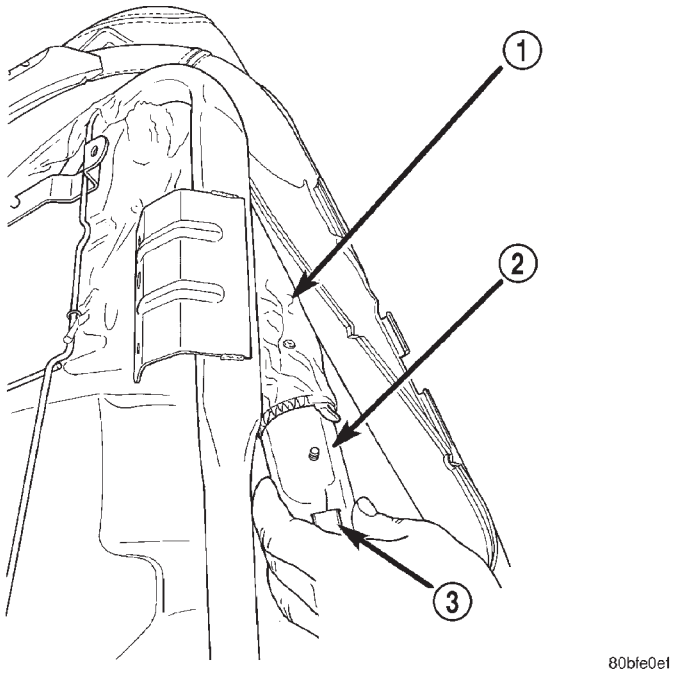

Fig. 5 Side Impact Airbag Module Electrical Connector

1 – AIRBAG MODULE NYLON SLEEVE
2 – AIRBAG MODULE
3 – AIRBAG MODULE ELECTRICAL CONNECTOR

(10) Working between seat back trim cover/cushion and frame carefully unhook airbag module studs from nylon sleeve and slide module out of sleeve. Be careful not to tear nylon sleeve as this will affect function of airbag system.

CAUTION: Be certain not to tear the side impact airbag module nylon sleeve during removal.

INSTALLATION

CAUTION: Do not replace a deployed side impact airbag module. If the side impact airbag module has been deployed, replace the entire seat assembly and all damaged parts.

NOTE: The side impact airbag module connector must face down (toward seat cushion) after installation.

(1) Carefully slide the side impact airbag module in nylon sleeve until mounting studs line up with holes provided in nylon sleeve. Be careful not to tear nylon sleeve as this will affect function of airbag system.

REMOVAL AND INSTALLATION (Continued)

CAUTION: The side impact airbag module must be inside the nylon sleeve before installing retaining nuts. Failure to do so will adversely affect the function of the side impact airbag system.

(2) Pull side impact airbag module and nylon sleeve assembly up to line up mounting studs and mistake proofing pin with holes provided in seat back frame mounting bracket (Fig. 6). Install the side impact airbag module retaining nuts. Torque to 10.7 N·m (94.7 in. lbs.).

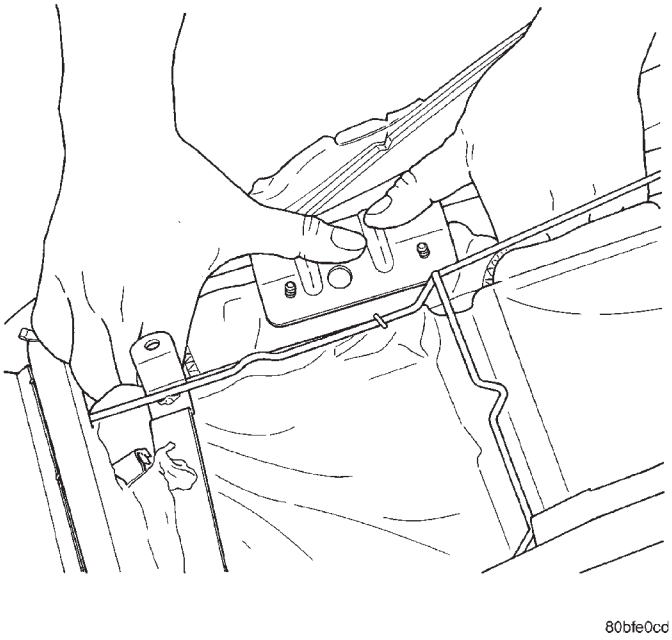

Fig. 6 Installing Side Impact Airbag Module

(3) Position the upper seat back trim cover and cushion over seat back frame.

(4) Connect the side impact airbag module electrical connector. After initial connector is installed be certain the yellow locking tab is in the upper "locked" position. Check to be certain connector cannot be removed once yellow locking tab is positioned.

(5) Position seat back trim cover and install seat back trim cover J-straps on the upper, lower and airbag side of seat back frame.

(6) Install the plastic back panel on the seat back (Fig. 4). Refer to Body, Front Seat Back Cover Removal and Installation. Install four screws in the upper mounting location of the back cover. Refer to Body for a detailed procedure.

(7) Install the front seat back in vehicle. Refer to Body, Front Seat Removal and Installation.

CAUTION: Be certain plastic back panel is securely installed on the seat back. Failure to do so will adversely affect the side impact airbag system.

WARNING: DO NOT CONNECT BATTERY NEGATIVE CABLE YET. REFER FIRST TO DIAGNOSIS AND TESTING, AIRBAG SYSTEM TEST.

(8) Close hood.

(9) Verify vehicle and system operation.

SIDE IMPACT AIRBAG CONTROL MODULE (SIACM)

The removal and installation of the driver side and passenger side modules is identical. The orientation of the modules is the only difference (which way they are tilted).

WARNING: THE MODULES CANNOT BE INTERCHANGED. THEY ARE UNIQUE TO EACH SIDE.

REMOVAL

(1) Open hood.

(2) Disconnect and isolate the battery negative cable (Fig. 3).

(3) Remove the lower seat trim. Locate the connector for the side impact airbag module which is under the seat on the outboard side, attached to the seat frame. Disconnect the harness side of the connector. **This is to engage the shorting clips to disable the side impact airbag system.**

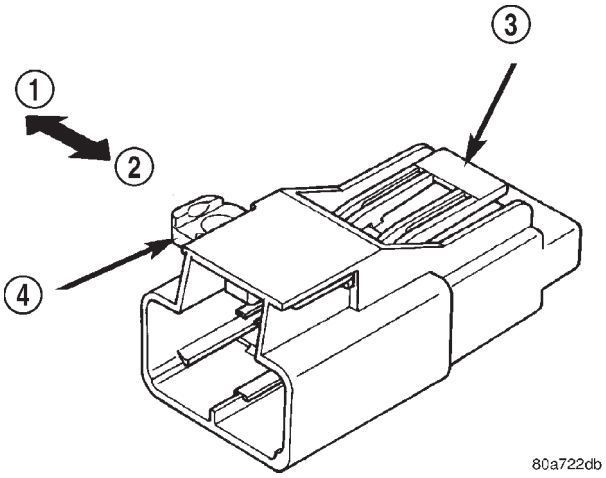

Fig. 7 Side Impact Airbag Module Connector

1 – UNLOCK
2 – LOCK
3 – PRESS LOCK
4 – RED LOCKING TAB

(4) Remove the lower B-pillar trim from the appropriate side of the vehicle. Refer to Body, B-Pillar Trim Removal and Installation.

(5) Remove the seat belt retractor. Refer to Body, Removal and Installation, Front Seat Belt Retractor.

REMOVAL AND INSTALLATION (Continued)

WARNING: DO NOT REMOVE SIACM FROM THE MOUNTING BRACKET. THIS IS SERVICED WITH THE BRACKET AND A NEW ONE WILL COME WITH THE REPLACEMENT SIACM.

(6) Remove the SIACM retaining nuts and ground eyelet (Fig. 8).
(7) Pull SIACM out of B-pillar (Fig. 8).
(8) Disconnect the SIACM electrical connector (Fig. 8).
(9) Remove the module from the vehicle.

INSTALLATION

(1) Connect the SIACM electrical connector (Fig. 8).
(2) Position the SIACM in the b-pillar (Fig. 8) and install the retaining nuts. Torque the nuts to 41 N·m (360 in. lbs.).

NOTE: Place the ground eyelet over the TOP REAR (towards the rear of the vehicle) weld stud when reattaching the SIACM. This location prevents the eyelet from spinning during tightening.

(3) Install the seat belt retractor. Refer to Body, Removal and Installation, Front Seat Belt Retractor.
(4) Install the lower B-pillar trim. Refer to Body, B-Pillar Trim Removal and Installation.
(5) Connect the harness side of the connector. Install the lower seat trim.

WARNING: DO NOT CONNECT BATTERY NEGATIVE CABLE YET. REFER FIRST TO DIAGNOSIS AND TESTING, AIRBAG SYSTEM TEST.

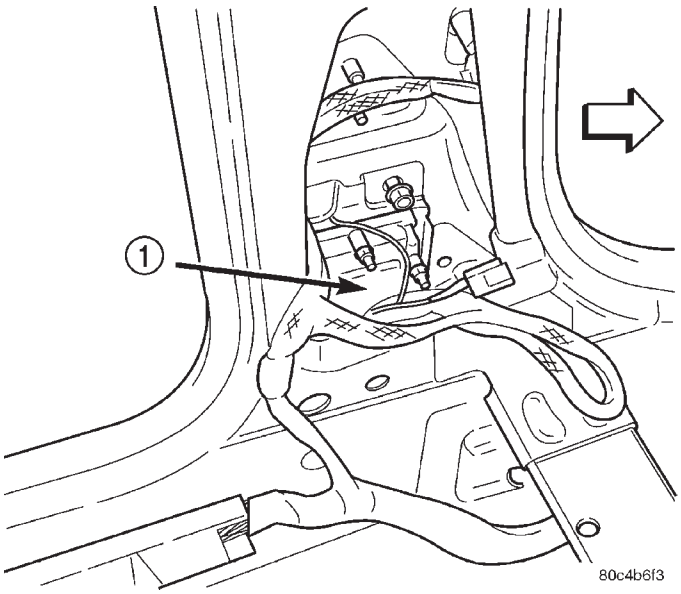

Fig. 8 Side Impact Airbag Control Module (SIACM) Location - Remove/Install

1 – SIDE IMPACT AIRBAG CONTROL MODULE

(6) Close hood.
(7) Verify vehicle and system operation.

SEAT BELT TENSIONER

TABLE OF CONTENTS

	page
DESCRIPTION AND OPERATION	
SEAT BELT TENSIONER SYSTEM	21
DIAGNOSIS AND TESTING	
SEAT BELT TENSIONER	21
REMOVAL AND INSTALLATION	
SEAT BELT RETRACTOR	21

DESCRIPTION AND OPERATION

SEAT BELT TENSIONER SYSTEM

DESCRIPTION

The seat belt system incorporates Tensioner Modules. They are integral to the seat belt retractors (Fig. 1) and cannot be serviced. If found defective they must be replaced.

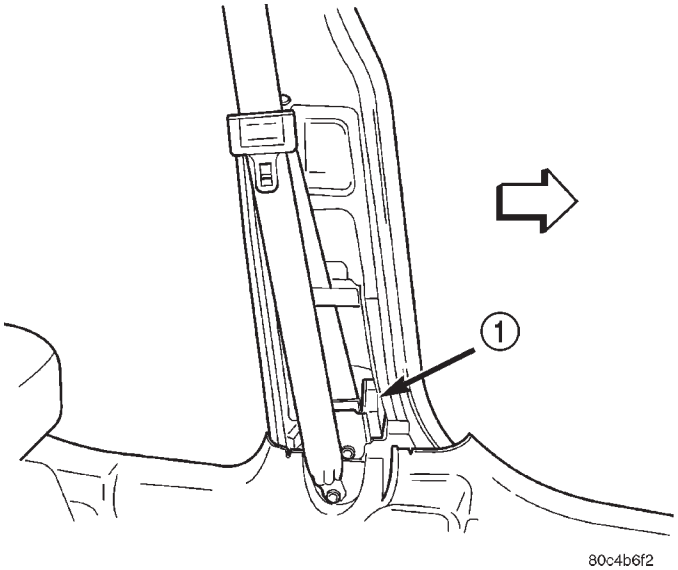

Fig. 1 Seat Belt Tensioner Location

1 – SEAT BELT TENSIONER

OPERATION

At the onset of an impact event, each tensioner uses a pyrotechnic device which is triggered simultaneously with the airbags to rapidly retract the seat belts. With the slack removed, the occupant's forward motion in an impact will be reduced as will the likelihood of contacting interior components. After an impact that deploys the airbags, the seat belt tensioner assembly must be replaced.

The Occupant Restraint Controller (ORC) monitors the seat belt tensioner circuit resistance and reports active and stored Diagnostic Trouble Codes (DTC's) if any problem is found.

Once a vehicle has been in an accident, the tensioner will have a "Gravel/Grinding" sound to it after the tensioner has been put into use. This must be replaced along with any deployed airbags and broken or damaged parts.

WARNING: WHEN THE FRONT AIRBAG IS DEPLOYED, THE TENSIONER WILL HAVE DEPLOYED ALSO AND SHOULD BE REPLACED.

DIAGNOSIS AND TESTING

SEAT BELT TENSIONER

Use a DRBIII® scan tool and the proper Body Diagnostic Procedure manual for Diagnosis and Testing.

REMOVAL AND INSTALLATION

SEAT BELT RETRACTOR

Refer to Body, Removal and Installation, Seat Belt Retractor.

ELECTRICALLY HEATED SYSTEMS

TABLE OF CONTENTS

	page
DESCRIPTION AND OPERATION	
REAR WINDOW DEFOGGER SYSTEM	1
REAR WINDOW DEFOGGER SWITCH	1
DIAGNOSIS AND TESTING	
GRID LINES	2
REAR WINDOW DEFOGGER SWITCH	2
REAR WINDOW DEFOGGER SYSTEM	3
SERVICE PROCEDURES	
GRID LINE AND TERMINAL REPAIR	4
REMOVAL AND INSTALLATION	
REAR WINDOW DEFOGGER GRID LINES	4
REAR WINDOW DEFOGGER SWITCH	4

DESCRIPTION AND OPERATION

REAR WINDOW DEFOGGER SYSTEM

DESCRIPTION

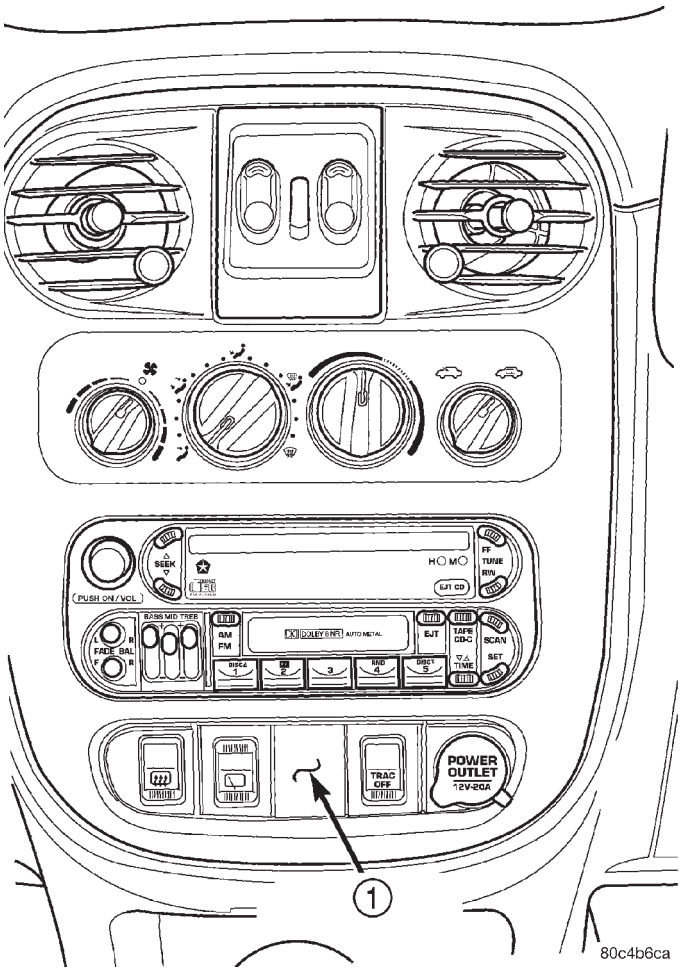

Fig. 1 Rear Window Defogger Switch Location

1 – ACCESSORY SWITCH BEZEL

The system consists of a rear glass with two vertical bus bars and a series of electrically connected grid lines fired on the inside surface. A control switch and a timing circuit are combined into a single assembly.

A push-button at the center of the instrument panel, below the radio, turns the defroster ON or OFF.

Circuit protection is provided by a cartridge fuse located in the Power Distribution Center (PDC) for the heated grid circuit, and by a fuse in the fuse block for the control circuit.

OPERATION

When the switch is turned to the ON position, current is directed to the rear defogger grid lines. The heated grid lines heat the rear glass to clear the surface of fog or frost. An amber light shows that the defroster is on.

NOTE: The defroster turns off automatically after 10 minutes of operation. Each following activation of the defroster will last for five minutes.

CAUTION: Grid lines can be damaged or scraped off with sharp instruments. Care should be taken in cleaning glass or removing foreign materials, decals or stickers. Normal glass cleaning solvents or hot water used with rags or toweling is recommended.

REAR WINDOW DEFOGGER SWITCH

DESCRIPTION

The rear window defogger switch is a control switch and timing circuit integrated into a single panel mounted assembly. The switch is located on the instrument panel center, just below the radio (Fig. 1). The rear window defogger switch and the rear win-

DESCRIPTION AND OPERATION (Continued)

dow defogger switch LED indicator cannot be repaired and, if faulty or damaged, the entire switch assembly must be replaced.

OPERATION

Actuating the switch energizes the circuit which allows current to flow through the grid lines. Upon initial actuation for approximately eight to ten minutes, or until either the switch or ignition is turned off. An indicating lamp illuminates a Light Emitting Diode (LED) inlaid in the control switch.

DIAGNOSIS AND TESTING

GRID LINES

The horizontal grid lines and vertical bus bar lines printed and fired on the inside surface of rear window glass (Fig. 4) comprise an electrical parallel circuit. The electrically conductive lines are composed of a silver-ceramic material which when fired on glass becomes bonded to the glass and is highly resistant to abrasion. It is possible however, that a break may occur in an individual grid line resulting in no current flow through the line. To detect breaks in grid lines the following procedure is required:

(1) Turn ignition ON and turn control switch to ON. The LED should come on.

(2) Using a DC voltmeter with 0-15 volt range, contact terminal (B) with the negative lead of the voltmeter. With the positive lead of the voltmeter, contact terminal (A) (Fig. 4). The voltmeter should read 10-14 volts. A lower voltage reading indicates a poor connection in the feed or the ground circuit.

(3) With the negative lead of the voltmeter, contact a good body ground point. The voltage reading should not change.

(4) Connect the negative lead of the voltmeter to terminal (B) and touch each grid line at Mid-Point with the positive lead. A reading of:

- Approximately 6 volts indicates the line is OK.
- 0 volts indicates a break in line between Mid-Point (C) and terminal (A).
- 10-14 volts indicates a break between Mid-Point (C) and terminal (B).

Move the lead toward the break and voltage will change as soon as the break is crossed. Refer to (Fig. 4).

REAR WINDOW DEFOGGER SWITCH

The rear window defogger switch may be tested in the vehicle or out of the vehicle, on the bench.

IN-VEHICLE TESTING

(1) Remove the switch from the instrument panel but leave the switch connected, refer to Instrument Panel Systems, Accessory Switch Bezel Removal and Installation.

(2) Turn the ignition switch ON.

(3) Using a voltmeter, check for battery voltage at Pin 1 and 2 (Fig. 2).

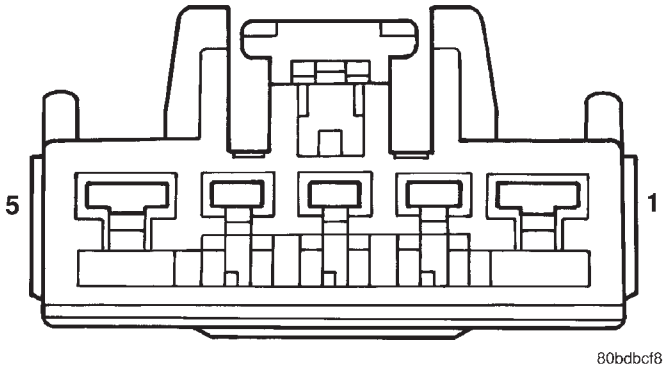

Fig. 2 Rear Window Defogger Switch Harness Connector

REAR WINDOW DEFOGGER SWITCH AND HARNESS CONNECTOR PIN CALL-OUT

PIN	FUNCTION
1	FUSED B+
2	FUSED IGNITION SWITCH OUTPUT (RUN)
3	GROUND
4	PANEL LAMPS DRIVER
5	PANEL LAMPS DRIVER

(a) If OK, go to Step 4.

(b) If NOT OK, check fuse 7 in the fuse block and the 40 Amp cartridge fuse in the Power Distribution Center (PDC). If fuses are OK, check wiring circuit. Refer to Wiring Diagrams.

(4) Check Pin 5, with switch in the ON position there should be battery voltage and no voltage in the OFF position.

(a) If OK, go to Step 5.

(b) If NOT OK, no voltage in the ON position or voltage in the OFF position. Replace the switch.

(5) Press switch to ON position. The indicator lamp should come on and remain on for approximately 10 minutes. If the indicator lamp fails to light or no voltage is present for approximately 10 minutes. Replace Rear Window Defogger Switch. Refer to Instrument Panel Systems, Accessory Switch Bezel Removal and Installation.

DIAGNOSIS AND TESTING (Continued)

BENCH TESTING

(1) First remove switch. Refer to Instrument Panel Systems, Accessory Switch Bezel Removal and Installation.

(2) With switch removed from vehicle, use a jumper wire and connect a 12 volt supply to Pin 1 and 2. Using a third jumper wire, ground Pin 3. Refer to (Fig. 3) and the Rear Window Defogger Switch and Harness Connector Pin Call-Out table.

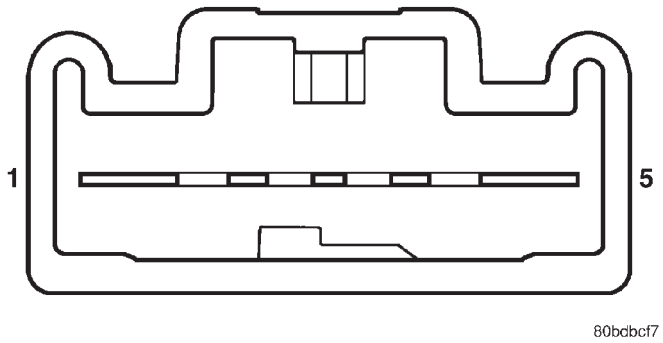

Fig. 3 Rear Window Defogger Switch Connector

(3) Follow the same procedures used for IN-VEHICLE TESTING, except for step Step 2.

REAR WINDOW DEFOGGER SYSTEM

Electrically heated rear window defogger operation can be checked in the vehicle in the following manner:

(1) Turn the ignition switch to the ON position.

(2) Connect an ammeter in series with the battery. Push the rear window defogger switch to the ON position. A distinct increase in amperage draw should be noted.

(3) The rear window defogger operation can be checked by feeling the glass. A distinct difference in temperature between the grid lines and adjacent clear glass can be detected in three to four minutes of operation.

(4) Using a DC voltmeter, connect the negative lead to Point B, and the positive lead to Point A (Fig. 4). The voltmeter should read 10-14 volts.

(5) Step 2, Step 3 or Step 4 above will confirm system operation. Indicator light illumination means that there is power available at the switch output, and does not necessarily verify system operation.

(6) If turning the switch ON produced no distinct current draw on the ammeter the problem should be isolated in the following manner:

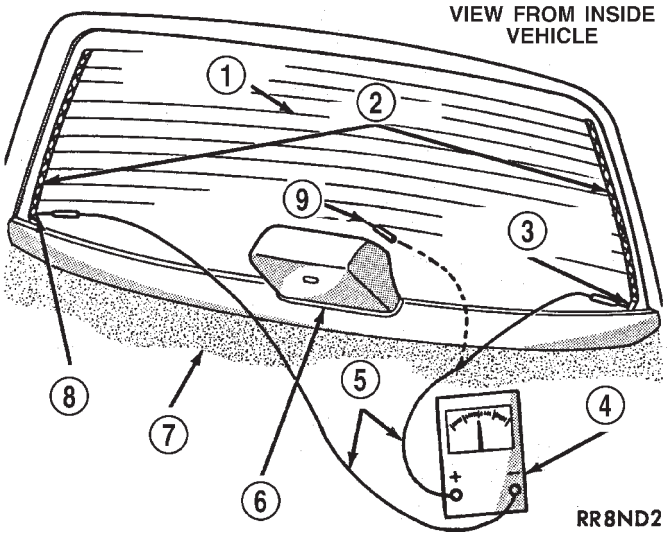

Fig. 4 Rear Glass Grid Line Test - Typical

1 – REAR WINDOW DEFOGGER
2 – BUS BARS
3 – VOLTAGE FEED “A”
4 – VOLTMETER
5 – PICK-UP LEADS
6 – C.H.M.S.L. TRIM COVER
7 – PARCEL SHELF
8 – GROUND “B”
9 – MID-POINT “C”

(a) Confirm the ignition switch is ON.

(b) Ensure that the heated rear glass feed wire is connected to the terminal or pigtail and that the ground wire is in fact grounded.

(c) Ensure that the cartridge fuse and control circuit fuse are OK and all electrical connections are secure.

(7) When the above steps have been completed and the system is still inoperative, one or more of the following is defective:

(a) Rear Window Defogger Switch.

(b) All rear window grid lines would have to be broken or one of the feed wires are not connected for the system to be inoperative.

(8) If turning the switch ON produces severe voltmeter deflection, the circuit should be closely checked for a shorting condition.

(9) If the system operation has been verified but indicator lamp does not light, replace the switch.

(10) For detailed wiring information, refer to Wiring Diagrams.

SERVICE PROCEDURES

GRID LINE AND TERMINAL REPAIR

WARNING: REPAIR KIT MAY CAUSE SKIN OR EYE IRRITATION. CONTAINS EPOXY RESIN AND AMINE TYPE HARDENER, HARMFUL IF SWALLOWED. AVOID CONTACT WITH SKIN AND EYES. FOR SKIN, WASH AFFECTED AREAS WITH SOAP AND WATER. DO NOT TAKE INTERNALLY. IF TAKEN INTERNALLY, INDUCE VOMITING; CALL A PHYSICIAN IMMEDIATELY. IF IN CONTACT WITH EYES, FLUSH WITH PLENTY OF WATER. USE WITH ADEQUATE VENTILATION. DO NOT USE NEAR FIRE OR FLAME. CONTENTS CONTAIN 3 PERCENT FLAMMABLE SOLVENTS.

KEEP OUT OF REACH OF CHILDREN.

The repair of the grid lines or the terminal is possible using the Mopar ® Repair Package or equivalent.

(1) Mask repair area so conductive epoxy can be extended onto the line or the bus bar (Fig. 5).

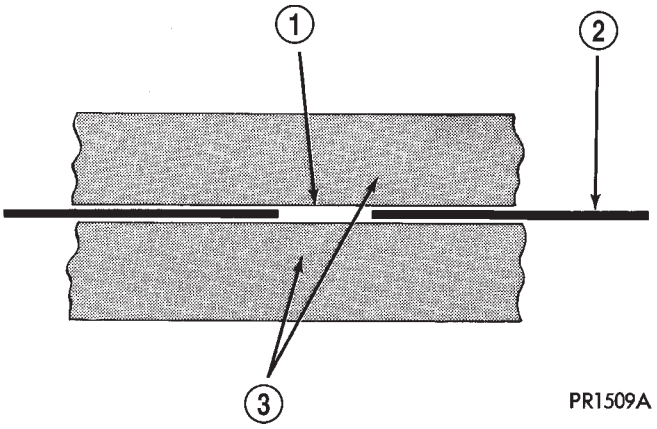

Fig. 5 Grid Line Repair

1 – BREAK
2 – GRID LINE
3 – MASKING TAPE

(2) Follow instructions in repair kit for preparing damaged area.

(3) Remove package separator clamp and mix plastic conductive epoxy thoroughly. Fold in half and cut center corner to dispense epoxy.

(4) For grid line, mark off area to be repaired with masking tape or a template (Fig. 5).

(5) Apply conductive epoxy through slit in masking tape. Overlap both ends of the break by 19 mm (3/4 inch).

(6) For a terminal or pigtail replacement, mask adjacent areas so epoxy can be extended onto line as well as bus bar. Apply a thin layer of epoxy to area where terminal was fastened and to adjacent line.

(7) Apply a thin layer of conductive epoxy on terminal and place terminal on desired location. To prevent terminal from moving while the epoxy is curing, it must be wedged or clamped.

(8) Carefully remove masking tape from grid line.

CAUTION: Do not allow the glass surface to exceed 204°C (400°F), glass may fracture.

(9) Allow epoxy to cure 24 hours at room temperature or use heat gun with a 260°to 371°C (500° to 700°F) range for 15 minutes. Hold gun approximately 254 mm (10 inches) from repaired area.

(10) After conductive epoxy is properly cured remove wedge from terminal and check out operation of rear window defogger. Do not attach connectors until curing is complete.

REMOVAL AND INSTALLATION

REAR WINDOW DEFOGGER GRID LINES

The rear window defogger grid lines are serviced with the rear window glass. If a grid line repair does not fix the grid line and allow it to function properly, replacement of the liftgate glass is necessary. Refer to Body Removal and Installation, Rear Window.

REAR WINDOW DEFOGGER SWITCH

Refer to Instrument Panel Systems, Accessory Switch Bezel Removal and Installation.

POWER DISTRIBUTION SYSTEMS

TABLE OF CONTENTS

page

DESCRIPTION AND OPERATION
POWER DISTRIBUTION SYSTEM. 1
CIGAR LIGHTER/AUXILIARY POWER OUTLET 1
FUSE BLOCK. 3
POWER DISTRIBUTION CENTER (PDC) 3

page

REMOVAL AND INSTALLATION
CIGAR LIGHTER/AUXILIARY POWER OUTLET 4
FUSE BLOCK. 5
POWER DISTRIBUTION CENTER (PDC) 5

DESCRIPTION AND OPERATION

POWER DISTRIBUTION SYSTEM

DESCRIPTION

This group covers the various standard and optional power distribution components used on this model. Refer to Wiring Diagrams for complete circuit diagrams of the various power distribution components.

The power distribution system for this vehicle consists of the following components:

- Power Distribution Center (PDC)
- Fuse Block

OPERATION

The power distribution system for this vehicle is designed to provide safe, reliable, centralized, and convenient to access, distribution of the electrical current required to operate all of the many standard and optional factory-installed electrical and electronic powertrain, chassis, safety, comfort and convenience systems. At the same time, these systems were designed to provide centralized locations for conducting diagnosis of faulty circuits, and for sourcing the additional current requirements of many aftermarket vehicle accessory and convenience items.

These power distribution systems also incorporate various types of circuit control and protection features, including:

- Fuses
- Fuse cartridges
- Fusible links
- Automatic resetting circuit breakers
- Relays
- Flashers
- Timers
- Circuit splice blocks.

Following are general descriptions of the major components in the power distribution system. Refer to the owner's manual in the vehicle glove box for more information on the features, use and operation of all of the power distribution system components.

CIGAR LIGHTER/AUXILIARY POWER OUTLET

DESCRIPTION

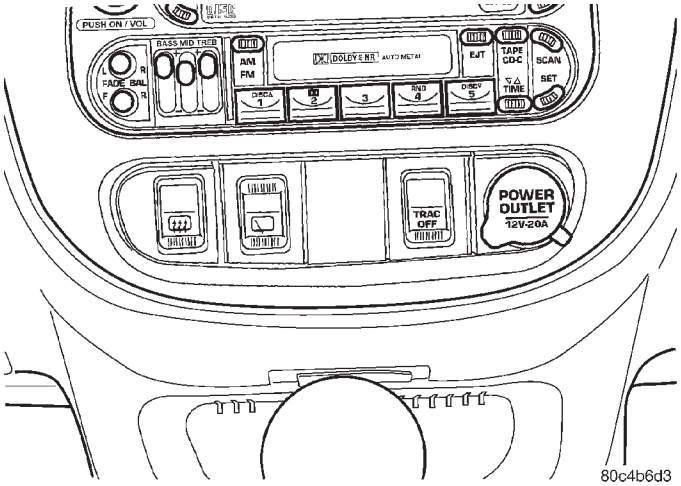

Fig. 1 Instrument Panel Mounted Cigar Lighter/ Power Outlet Location

INSTRUMENT PANEL MOUNTED

An instrument panel mounted cigar lighter/power outlet receptacle (Fig. 1) is optional equipment on this model. On models equipped with the optional Smoker's Package, the cigar lighter knob and heating element are included. On models without the Smoker's Package, the cigar lighter receptacle is equipped with a snap fit plastic cap and is treated as an auxiliary power outlet. The cigar lighter receptacle is installed in the instrument panel accessory switch bezel, which is located near the bottom of the instrument panel center stack area, below the radio. The cigar lighter base is secured by a snap fit within the center lower bezel. This power outlet has a constant 12 volt battery feed.

DESCRIPTION AND OPERATION (Continued)

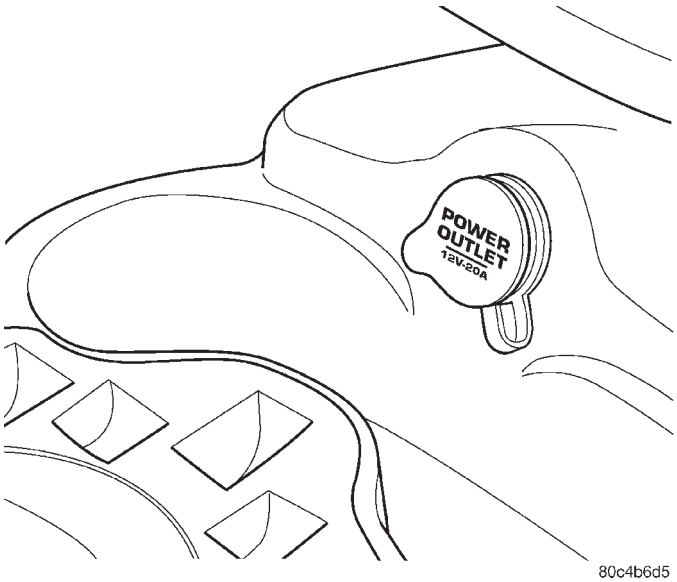

Fig. 2 Console Mounted Power Outlet Location

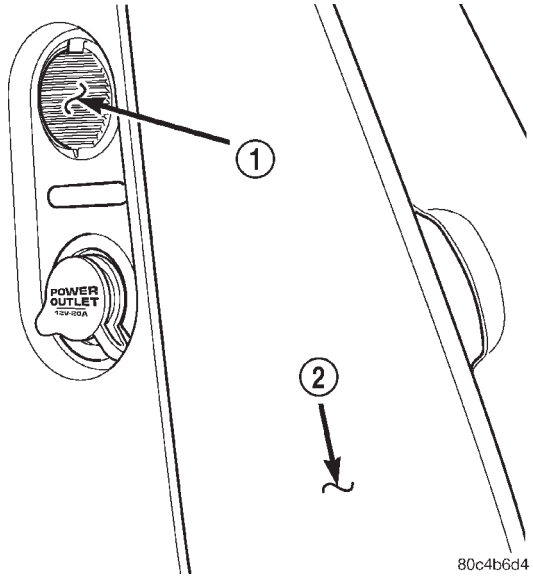

Fig. 3 Rear Cargo Area Power Outlet Location

1 – CARGO LAMP
2 – SPARE TIRE JACK COVER

The cigar lighter receptacle is serviced with the accessory switch bezel and if defective, the entire switch bezel must be replaced. The plastic cap and the knob and heating element unit are available for service replacement. These components cannot be repaired and, if faulty or damaged, they must be replaced.

FRONT CONSOLE AND REAR CARGO AREA MOUNTED

A front console mounted power outlet is standard equipment and a rear cargo area power outlet is optional equipment on this model. The front console mounted power outlet is mounted near the front of the console just in front of the cup holders (Fig. 2). This outlet can be used as a cigar lighter or power outlet, but only has 12 volt battery voltage when the ignition is in the ON or ACC positions. The rear power outlet is installed in the right rear quarter trim panel, near the spare tire jack (Fig. 3). The power outlet base and mount are secured by a snap fit within the quarter trim panel. A plastic protective cap snaps into the power outlet base when the power outlet is not being used, and hangs from the power outlet base mount by an integral bail strap while the power outlet is in use. While the power outlet is very similar to a cigar lighter base unit, it does not include the two small spring-clip retainers inside the bottom of the receptacle shell that are used to secure the cigar lighter heating element to the insulated contact. It has 12 volt battery voltage when the ignition is in the ON or ACC positions.

OPERATION

CIGAR LIGHTER/POWER OUTLET (INSTRUMENT PANEL AND CONSOLE MOUNTED)

The cigar lighter consists of two major components: a knob and heating element unit, and the cigar lighter base or receptacle shell. The receptacle shell is connected to ground, and an insulated contact in the bottom of the shell is connected to battery current.

The cigar lighter knob and heating element are encased within a spring-loaded housing, which also features a sliding protective heat shield. When the knob and heating element are inserted in the receptacle shell, the heating element resistor coil is grounded through its housing to the receptacle shell. If the cigar lighter knob is pushed inward, the heat shield slides up toward the knob exposing the heating element, and the heating element extends from the housing toward the insulated contact in the bottom of the receptacle shell.

Two small spring-clip retainers are located on either side of the insulated contact inside the bottom of the receptacle shell. These clips engage and hold the heating element against the insulated contact long enough for the resistor coil to heat up. When the heating element is engaged with the contact, battery current can flow through the resistor coil to ground, causing the resistor coil to heat.

When the resistor coil becomes sufficiently heated, excess heat radiates from the heating element causing the spring-clips to expand. Once the spring-clips expand far enough to release the heating element, the spring-loaded housing forces the knob and heating element to pop back outward to their relaxed position. When the cigar lighter knob and element are pulled out of the receptacle shell, the protective heat shield slides downward on the housing so that

DESCRIPTION AND OPERATION (Continued)

the heating element is recessed and shielded around its circumference for safety.

POWER OUTLET (REAR CARGO AREA MOUNTED)

The power outlet base or receptacle shell is connected to ground, and an insulated contact in the bottom of the shell is connected to battery current. The power outlet receives battery voltage from a fuse in the Power Distribution Center (PDC) through a fuse in the fuse block when the ignition is in the ON or ACC positions.

FUSE BLOCK

DESCRIPTION

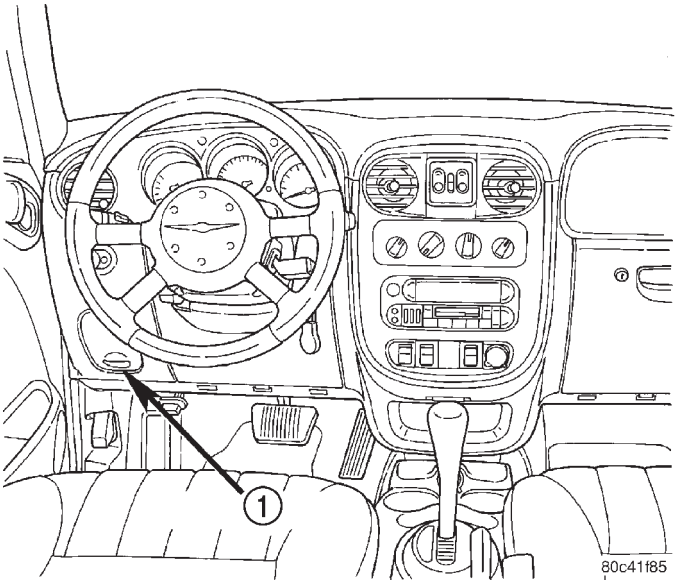

Fig. 4 Fuse Block Location

1 – FUSE PANEL

An electrical Fuse Block is located in the left front lower instrument panel. It serves to simplify and centralize numerous electrical components, as well as to distribute electrical current to many of the accessory systems in the vehicle.

The Fuse Block is positioned on a mounting bracket up and under the left instrument panel. It is secured by two screws. The fuse block is concealed behind a fuse panel cover. The fuse panel cover is a snap-fit access cover that conceals the fuse block fuses. A fuse layout placard is on the back of the end cap to ensure proper fuse identification.

OPERATION

The fuse block houses blade-type fuses and automatic resetting circuit breakers. Internal connection of all the fuse block circuits is accomplished by an intricate network of hard wiring and bus bars. Refer to Wiring Diagrams for complete circuit diagrams.

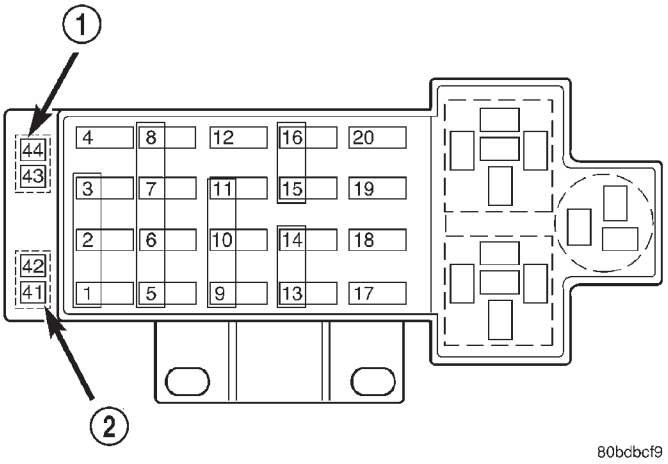

Fig. 5 Fuse Block

1 – CIRCUIT BREAKER 2
2 – CIRCUIT BREAKER 1

The fuses and circuit breakers are available for service replacement. The fuse block unit cannot be repaired and is only serviced as an assembly. If any circuit or the fuse block housing is faulty or damaged, the entire fuse block and instrument panel wire harness assembly must be replaced.

POWER DISTRIBUTION CENTER (PDC)

DESCRIPTION

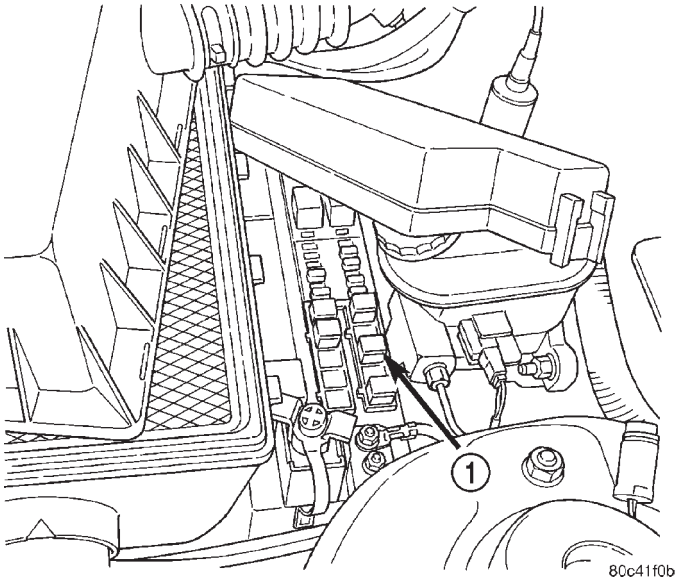

Fig. 6 Power Distribution Center (PDC) Location

1 – PDC

All of the electrical current distributed throughout this vehicle is directed through the standard equipment Power Distribution Center (PDC). The molded

DESCRIPTION AND OPERATION (Continued)

plastic PDC housing is located in the left front corner of the engine compartment, just behind the air cleaner housing and the battery. The PDC housing has a molded plastic cover. The PDC cover is easily removed for service access and has a convenient fuse and relay layout label affixed to the inside surface of the cover to ensure proper component identification.

The PDC housing is secured to the left inner fender well an indexing pin and one screw. All of the PDC outputs are through the integral engine compartment wire harness.

OPERATION

All of the current from the generator cable connection goes to the battery through a 10 gauge fusible link that is secured with a nut to the positive battery terminal at the starter. The PDC houses up to ten six fuse cartridges, which replace all in-line fusible links. The PDC also houses up to twelve blade-type fuses, up to two full International Standards Organization (ISO) relays, and up to eight mini International Standards Organization (ISO) relays. Internal connection of all the PDC circuits is accomplished by an intricate network of hard wiring and bus bars. Refer to Wiring Diagrams for complete circuit diagrams.

The fusible link, fuses and relays are available for service replacement. The PDC unit cannot be repaired and is only serviced as a unit with the engine compartment wire harness. If the PDC is faulty or damaged, the engine compartment wire harness assembly must be replaced.

REMOVAL AND INSTALLATION

CIGAR LIGHTER/AUXILIARY POWER OUTLET

This removal and installation procedure applies to the **Front Console and Rear Cargo Area** mounted outlets on this vehicle. If the instrument panel mounted cigar lighter/power outlet is defective, the entire accessory switch bezel must be replaced. Refer to Instrument Panel Systems, Removal and Installation, Accessory Switch Bezel.

REMOVAL

(1) Open hood.

(2) Disconnect and isolate the battery negative cable (Fig. 7).

(3) Look inside and note position of the retaining bosses (Fig. 8).

(4) Using external snap ring pliers with 90 degree tips. Insert pliers with tips against bosses and squeeze forcing bosses out of base.

(5) Pull out the base through mounting ring by gently rocking pliers. A tool can be made to do the same. Refer to (Fig. 9).

(6) Disconnect the base wires.

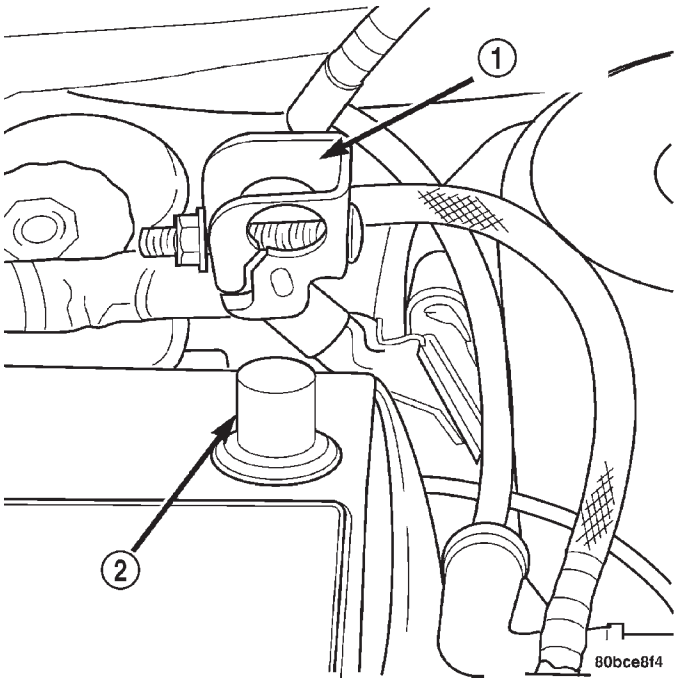

Fig. 7 Battery Negative Cable Remove/Install

1 – NEGATIVE CABLE
2 – NEGATIVE BATTERY POST

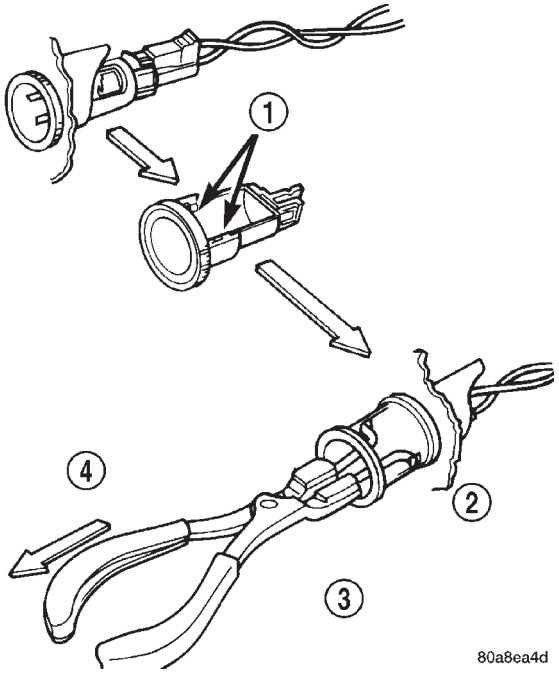

Fig. 8 Cigar Lighter/Power Outlet Base Removal

1 – RETAINING BOSSES-ENGAGE PLIERS HERE
2 – PARTIALLY REMOVED
3 – EXTERNAL SNAP-RING PLIERS
4 – PULL BASE OUT-THROUGH MOUNTING RING

(7) Set base aside and remove base mount ring.

REMOVAL AND INSTALLATION (Continued)

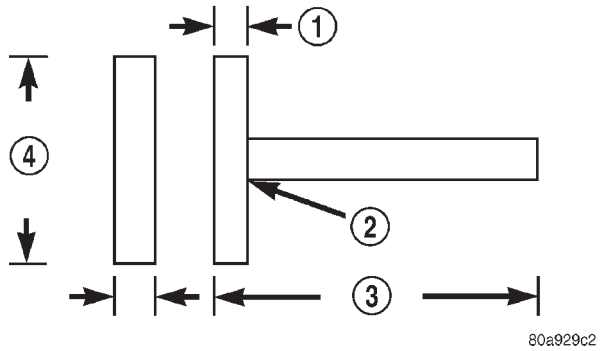

Fig. 9 Tool For Cigar Lighter/Power Outlet Removal

1 – 2.5MM (3/32 INS.)
2 – WELD
3 – 100MM (4 INS.)
4 – 22.25 TO 22.45MM (7/8 TO 57/64 INS.)

INSTALLATION

(1) Position mount ring to the instrument panel and feed the wires through ring. Index the cap and the mount ring with the index tab at 9 o'clock to the key in the instrument panel. Install the ring.

(2) Connect wires to base. Orient base alignment rib at 11 o'clock to mate the groove in mount ring at the same location

(3) Push base into the bezel till it locks.

(4) Install cigar lighter cap.

(5) Connect the battery negative cable (Fig. 7).

(6) Close hood.

(7) Verify vehicle and system operation.

FUSE BLOCK

WARNING: ON VEHICLES EQUIPPED WITH AIRBAGS, REFER TO RESTRAINT SYSTEMS BEFORE ATTEMPTING ANY STEERING COLUMN OR INSTRUMENT PANEL COMPONENT DIAGNOSIS OR SERVICE. FAILURE TO TAKE THE PROPER PRECAUTIONS COULD RESULT IN ACCIDENTAL AIRBAG DEPLOYMENT AND POSSIBLE PERSONAL INJURY.

REMOVAL

The Fuse Block is serviced with the instrument panel wire harness. If service is required to the fuse block, the entire instrument panel harness must be replaced.

(1) Open hood.

(2) Disconnect and isolate the battery negative cable (Fig. 7).

(3) The instrument panel must be removed from the vehicle. Refer to Instrument Panel Systems for Instrument Panel Assembly Removal and Installation.

(4) With the instrument panel on the bench, de-trim the instrument panel enough to gain access to all screws and connectors to remove instrument panel wire harness with fuse block.

INSTALLATION

(1) Install the new wire harness and fuse block.

(2) Re-trim the instrument panel with what was necessary for harness removal.

(3) Install instrument panel into vehicle.

Ensure that the wire terminals and connectors are in good condition and connectors are properly installed.

(4) Connect the battery negative cable (Fig. 7).

(5) Close hood.

(6) Verify vehicle and system operation.

POWER DISTRIBUTION CENTER (PDC)

The Power Distribution Center (PDC) is serviced as a unit with the engine compartment wire harness. If any internal circuit of the PDC or the PDC housing is faulty or damaged, the entire PDC and engine compartment wire harness unit must be replaced.

REMOVAL

(1) Open hood.

(2) Disconnect and isolate the battery negative cable (Fig. 7).

(3) Disconnect each of the engine compartment wire harness connectors. Refer to Wiring Diagrams for more information on the locations of the affected connectors.

(4) Remove the fasteners that secure each of the engine compartment wire harness ground eyelets to the vehicle body and chassis components. Refer to Wiring Diagrams for more information on the ground eyelet locations.

(5) Disengage each of the retainers that secure the engine compartment wire harness to the vehicle body and chassis components. Refer to Wiring Diagrams for more information on the retainer locations.

(6) Disengage and remove the PDC housing from its mounting bracket.

(7) Remove the PDC and the engine compartment wire harness from the engine compartment as a unit.

INSTALLATION

NOTE: If the power distribution center (PDC) is being replaced with a new unit, be certain to transfer each of the fuses and relays from the old power distribution center to the proper cavities of the new power distribution center. Refer to Wiring Diagrams for the proper power distribution center cavity assignments.

(1) Position the PDC in the engine compartment.

REMOVAL AND INSTALLATION (Continued)

(2) Align the PDC on its mounting bracket and install.

(3) Route the engine compartment wire harness from the PDC through the engine compartment, engaging each of the harness retainers to the mounting provisions in the vehicle body and chassis components. Refer to Wiring Diagrams for more information on the harness routing and retainer locations.

(4) Install and tighten the fasteners that secure each of the engine compartment wire harness ground eyelets to the vehicle body and chassis components. Refer to Wiring Diagrams for more information on the ground eyelet locations.

(5) Reconnect each of the engine compartment wire harness connectors. Refer to Wiring Diagrams for more information on the locations of the affected connectors.

(6) Torque nut retaining positive battery cable at PDC to 96 - 141 N·m (85 - 130 in. lbs.).

(7) Reconnect the battery negative cable (Fig. 7).

(8) Close hood.

(9) Verify vehicle and system operation.

POWER LOCK SYSTEMS

TABLE OF CONTENTS

page

POWER DOOR LOCKS 1
REMOTE KEYLESS ENTRY (RKE). 5

POWER DOOR LOCKS

TABLE OF CONTENTS

page

DESCRIPTION AND OPERATION
POWER LOCK SYSTEM 1
POWER DOOR LOCKS 2
CHILD PROTECTION LOCKS 2
DIAGNOSIS AND TESTING
DOOR LOCK MOTOR 2
DOOR LOCK SWITCH 3
SERVICE PROCEDURES
DOUBLE ACTIVATION UNLOCK. 3
ROLLING DOOR LOCKS 3
REMOVAL AND INSTALLATION
DOOR LOCK MOTOR/LATCH. 4
DOOR LOCK SWITCH 4
LIFTGATE LOCK MOTOR 4
REMOTE KEYLESS ENTRY (RKE) MODULE 4

DESCRIPTION AND OPERATION

POWER LOCK SYSTEM

DESCRIPTION

All doors can be locked or unlocked electrically by operating the switch on either front door panel. When the door lock switch is activated the Remote Keyless Entry Module provides power to the door lock motors through relays internal to the module.

The Remote Keyless Entry (RKE) Module also controls the Vehicle Theft Security System (VTSS).

OPERATION

All doors can be locked or unlocked mechanically and independently with their respective locking knobs. The front doors can also be unlocked by actuation of the inside remote door handle.

The RKE Module has three modes of operation including customer usage mode, dealer lot storage mode, and shipping mode. The customer usage mode provides full functionality of the module and is the mode in which the RKE module should be operating when used by the customer. Dealer lot storage mode and shipping modes are reduced power modes meant to extend vehicle battery life during shipping and storage in the dealer lot. Dealer lot storage mode provides limited VTSS and power door lock functions, but disables the Remote Keyless Entry (RKE) functions. This mode is intended to be used when the vehicle is on the dealer lot to provide VTSS coverage of the vehicle while minimizing battery drain. Shipping mode disables all normal functions (i.e. power door locks, RKE, and VTSS) of the module, and is intended to be used when the vehicle is shipped from the assembly plant.

NOTE: The dealer must remove the module from “SHIP MODE” and place the RKE Module into either the “DEALER LOt” storage or “CUSTOMER USAGE” modes of operation after receiving the vehicle from the assembly plant. Refer to Vehicle Theft/Security Systems, Switching Operating Modes/Configuring a New Module under Service Procedures.

CENTRAL LOCKING/UNLOCKING

The door locks can be locked or unlocked electrically via the exterior door key cylinders to provide the central locking/unlocking feature. The central locking/unlocking feature incorporates a customer programmable “Double activation unlock” feature which operates in the following manner: When enabled, the first turn of the key cylinder to the UNLOCK position (toward the front of the vehicle)

DESCRIPTION AND OPERATION (Continued)

will mechanically unlock the door whose key cylinder is being turned. A second turn of the key cylinder to the UNLOCK position (within five seconds of the first turn) will cause all vehicle doors to unlock electrically. When this feature is disabled, all vehicle doors will be unlocked electrically upon the first turn of a key cylinder to the UNLOCK position. The vehicle is locked electrically by turning the key cylinder to the LOCK position once, regardless of the state of the double activation unlock feature.

POWER DOOR LOCKS

DESCRIPTION

The Remote Keyless Entry (RKE) Module actuates the power door lock relays when a door lock switch is activated. If the door lock switch is pressed for longer than eight consecutive seconds, the RKE module will de-energize the door lock motors.

The system includes the rolling door locking feature. The vehicle is shipped with the system enabled. When the system is disabled the door locks will work by use of the door lock switches and the Remote Keyless Entry system only.

OPERATION

When the rolling door lock system is enabled, the RKE module will automatically lock all the vehicle doors when all of the following conditions are met:

- All doors are closed
- The vehicle speed exceeds 15 +/- 1 mph.
- The throttle position sensor tip-in is greater than 10 +/- 2 degrees.

The RKE module will automatically re-lock all doors if the above conditions are met and if any of the doors become ajar and then closed again.

The enabling/disabling of the rolling door lock feature is customer programmable, as well as programmable with the DRB lll® scan tool.

The power lock motors are also equipped with a thermal protection system which prevents the motors from burning out. The motors may chatter if they are continuously activated.

DOOR LOCK INHIBIT

With the key in the ignition switch and the driver door open, the Remote Keyless Entry (RKE) Module will ignore the command to lock the power door locks via the interior driver door lock switch. Once the key is removed, or the driver door is closed, the RKE module will allow the power door locks to lock via the interior door lock switches.

CHILD PROTECTION LOCKS

DESCRIPTION

To provide a safer environment for children riding in the rear seat, the rear doors have the “child-protection” door lock system.

The child protection locks are on the rear doors only. The lock, when engaged, will disable the inside door handle from opening the door. The lock is part of the latch/lock assembly.

OPERATION

The lock is engaged by moving a lever that is located on the rearward inside edge of the door.

To use the system, open each rear door and move the control UP to engage. When the system on a door is engaged, that door can only be opened by using the outside door handle even if the inside door lock is in the unlocked position.

WARNING: AVOID TRAPPING ANYONE IN A VEHICLE IN A COLLISION. REMEMBER THAT THE REAR DOORS CAN ONLY BE OPENED FROM THE OUTSIDE WHEN THE CHILD PROTECTION LOCKS ARE ENGAGED.

NOTE: For emergency exit with the system engaged, move the lock rocker switch rearward (unlocked position), roll down window and open the door with the outside door handle.

DIAGNOSIS AND TESTING

DOOR LOCK MOTOR

(1) Make certain battery is in normal condition and fuses powering the RKE module aren’t blown before circuits are tested.

(2) To determine which motor is faulty, check each individual door for electrical lock and unlock or disconnect the motor connectors one at a time, while operating the door lock switch.

(3) In the event that none of the motors work, the problem maybe caused by a shorted motor, a bad switch or a bad relay internal to the RKE module. Disconnecting a defective motor will allow the others to work.

(4) To test an individual door lock motor, disconnect the electrical connector from the motor.

DIAGNOSIS AND TESTING (Continued)

(5) To lock the door, connect a 12 volt power source to one pin of the lock motor and a ground wire to the other pin.

(6) To unlock the door, reverse the wire connections at the motor pin terminals.

(7) If these results are NOT obtained, replace the motor.

DOOR LOCK SWITCH

(1) Remove the switch from its mounting location, and disconnect from vehicle wiring harness. Refer to Door Lock Switch Removal and Installation in this section.

(2) Using an ohmmeter, refer to Door Lock Switch Resistance table to determine if switch resistance is correct in the Lock and Unlock switch positions. Refer to Wiring Diagrams for harness connector pin-outs.

DOOR LOCK SWITCH RESISTANCE

SWITCH POSITION	CONTINUITY BETWEEN	RESISTANCE VALUE
LOCK	2 AND 3	1000Ω
UNLOCK	2 AND 3	249Ω

SERVICE PROCEDURES

DOUBLE ACTIVATION UNLOCK

The toggling of the double activation unlock feature (between enabled and disabled) can be performed with the use of the DRB lll® scan tool, or by the customer.

DRB III® PROGRAMMING

When using the DRB lll® scan tool, select:

(1) “Theft Alarm”

(2) “VTSS”

(3) “Miscellaneous”

and then the desired function.

CUSTOMER PROGRAMMING

(1) Open the driver door, sit in the driver seat, and close the driver door.

(2) Turn the ignition switch to the RUN position (without starting the vehicle) and then back to OFF. Repeat this step three additional times (for a total of four key ON/OFF cycles).

(3) Within ten seconds of switching the ignition switch to the OFF position for the last time (at the end of the fourth cycle in the above step), press the driver interior door lock switch to UNLOCK.

(4) A single chime will be heard to verify that the customer programmable toggle of the double activation unlock was successfully completed.

NOTE: When toggling the double activation unlock feature (customer programmable), the toggle that happens will be from the last state of the double activation unlock. If the double activation unlock feature was enabled, after the toggle process, it will now be disabled and vice versa. There is no telltale to inform you of which state the double activation unlock feature is in.

ROLLING DOOR LOCKS

The toggling of the rolling door lock feature (between enabled and disabled) can be performed with the use of the DRB lll® scan tool or by the customer.

DRB III® PROGRAMMING

When using the DRB lll® scan tool, select:

(1) “Theft Alarm”

(2) “VTSS”

(3) “Miscellaneous”

and then the desired function.

CUSTOMER PROGRAMMING

(1) Open the driver door, sit in the driver seat, and close the driver door.

(2) Turn the ignition switch to the RUN position (without starting the vehicle) and then back to OFF. Repeat this step three additional times (for a total of four key ON/OFF cycles).

(3) Within ten seconds of switching the ignition switch to the OFF position for the last time (at the end of the fourth cycle in the above step), press the driver interior door lock switch to LOCK.

(4) A single chime will be heard to verify that the customer programmable toggle of the rolling door locks was successfully completed.

NOTE: When toggling the rolling door locks (customer programmable), the toggle that happens will be from the last state of the rolling door locks. If the rolling door locks were enabled, after the toggle process, they will now be disabled and vice versa. There is no telltale to inform you of which state the rolling door locks are in.

REMOVAL AND INSTALLATION

DOOR LOCK MOTOR/LATCH

The power door lock motor is integral to the door latch. It is serviced with the latch as an assembly. Refer to Body, Front/Rear Door Latch Removal and Installation.

DOOR LOCK SWITCH

REMOVAL

(1) Open hood.
(2) Disconnect and isolate the battery negative cable (Fig. 1).

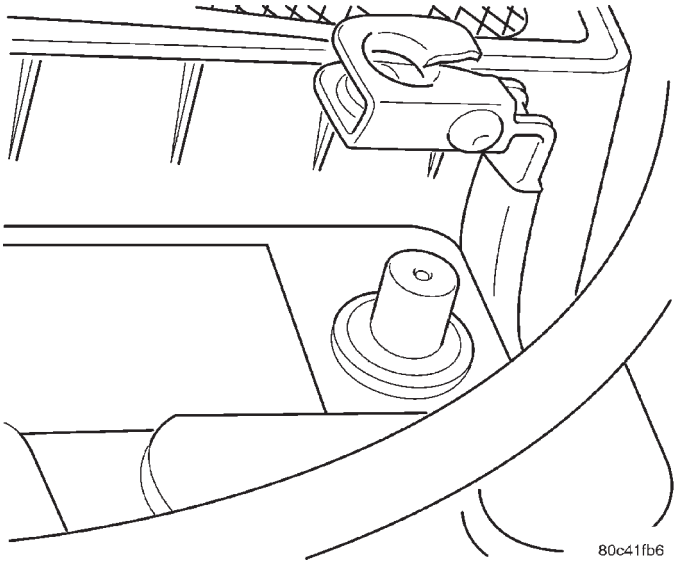

Fig. 1 Battery Negative Cable Remove/Install

(3) Open front door.
(4) Remove front door trim panel. Refer to Body, Front Door Trim Panel Removal and Installation.
(5) Disconnect wire connector to door lock switch.
(6) Remove two attaching screws to switch.
(7) Remove the switch from trim panel.

INSTALLATION

(1) Install the switch on trim panel.
(2) Install two attaching screws to switch.
(3) Connect wire connector to door lock switch.
(4) Install front door trim panel. Refer to Body, Front Door Trim Panel Removal and Installation.
(5) Close front door.
(6) Connect the battery negative cable (Fig. 1).
(7) Close hood.
(8) Verify vehicle and system operation.

LIFTGATE LOCK MOTOR

REMOVAL

(1) Open hood.
(2) Disconnect and isolate the battery negative cable (Fig. 1).
(3) Remove liftgate trim panel. Refer to Body, Liftgate Trim Panel, Removal and Installation.
(4) Disconnect motor wire harness connector.
(5) Remove liftgate lock motor from liftgate (Fig. 2) by gently unsnapping.

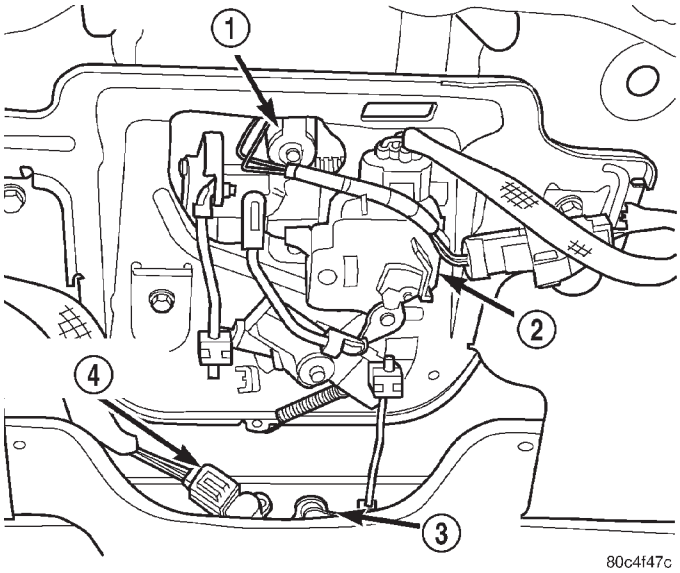

Fig. 2 Liftgate Lock Motor Location

1 – LIFTGATE CYLINDER LOCK SWITCH
2 – LIFTGATE LOCK MOTOR
3 – LATCH ASSEMBLY
4 – LIFTGATE AJAR SWITCH

INSTALLATION

(1) Install liftgate lock motor on the liftgate (Fig. 2).
(2) Install motor wire harness connector.
(3) Install the liftgate trim panel. Refer to Body, Liftgate Trim Panel Removal and Installation.
(4) Connect the battery negative cable (Fig. 1).
(5) Close hood.
(6) Verify vehicle and system operation.

REMOTE KEYLESS ENTRY (RKE) MODULE

The RKE module is the main component of the RKE system. Refer to Remote Keyless Entry (RKE), Removal and Installation, Remote Keyless Entry Module in this section.

REMOTE KEYLESS ENTRY (RKE)

TABLE OF CONTENTS

page

DESCRIPTION AND OPERATION
REMOTE KEYLESS ENTRY SYSTEM 5
REMOTE KEYLESS ENTRY TRANSMITTER 6
HORN CHIRP TOGGLE 6
DIAGNOSIS AND TESTING
REMOTE KEYLESS ENTRY MODULE 6
SERVICE PROCEDURES
HORN CHIRP TOGGLE 6
SWITCHING OPERATING MODES/ CONFIGURING A NEW MODULE 7
TRANSMITTER PROGRAMMING 7
REMOVAL AND INSTALLATION
REMOTE KEYLESS ENTRY (RKE) MODULE 7
RKE TRANSMITTER BATTERY 8
SPECIFICATIONS
TRANSMITTER BATTERY 8
TRANSMITTER RANGE 8

DESCRIPTION AND OPERATION

REMOTE KEYLESS ENTRY SYSTEM

DESCRIPTION

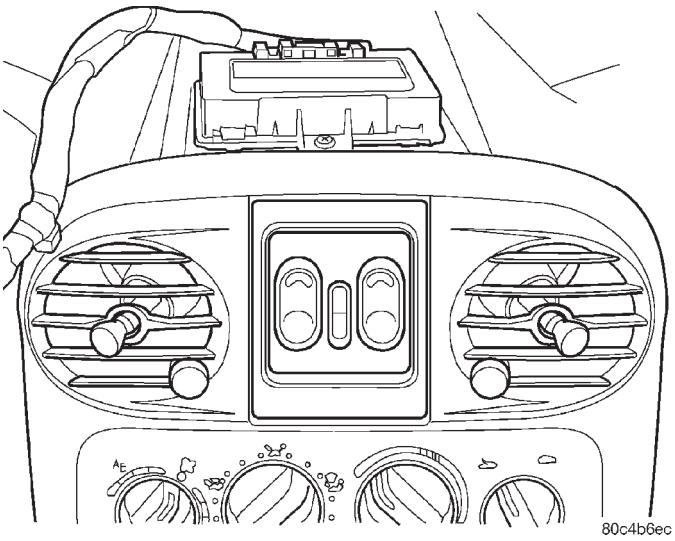

Fig. 1 Remote Keyless Entry (RKE) Module Location

The system allows locking and unlock of vehicle door(s) and panic by remote control using a hand held radio frequency (RF) transmitter. The receiver may receive signals from four transmitters. Each transmitter has its own code and the code has been stored in memory. If the transmitter is replaced or other transmitters are added, the code for each unit must be learned.

NOTE: The module must be in the "CUSTOMER USAGE" mode of operation for the remote keyless entry system to function.

The receiver may receive signals from up to four transmitters. Each transmitter has its own code, and the code is programmed and stored into RKE module memory. If a transmitter is replaced or additional transmitters are added, the codes for all units have to be reprogrammed into the RKE module memory. If a receiver module is replaced, the transmitter codes must be stored in the new receiver memory (by performing the steps for programming transmitters). The RKE module is capable of retaining all transmitter codes when power is removed from the module.

OPERATION

Operation of the Remote Keyless Entry system works in a similar manner to the central locking/unlocking feature. With the double activation unlock feature enabled, the first press of the transmitter UNLOCK button will electrically unlock the driver door, and a second press of the UNLOCK button (within five seconds of the first) will unlock all vehicle doors. With the double activation feature disabled, all vehicle doors will unlock upon the first press of the transmitter UNLOCK button. The vehicle is locked electrically by pressing the transmitter LOCK button once, regardless of the state of the double activation unlock feature. The vehicle is shipped with the double activation unlock feature enabled.

The RKE module has three modes of operation including customer usage mode, dealer lot storage mode, and shipping mode. The customer usage mode provides full functionality of the module and is the mode in which the RKE module should be operating when used by the customer. Dealer lot storage mode and shipping modes are reduced power modes meant to extend vehicle battery life during shipping and storage in the dealer lot. Dealer lot storage mode provides limited VTSS and power door lock functions, but disables the Remote Keyless Entry (RKE) func-

DESCRIPTION AND OPERATION (Continued)

tions. This mode is intended to be used when the vehicle is on the dealer lot to provide VTSS coverage of the vehicle while minimizing battery drain. Shipping mode disables all normal functions (i.e. power door locks, RKE, and VTSS) of the module, and is intended to be used when the vehicle is shipped from the assembly plant.

NOTE: The dealer must remove the module from "SHIP MODE" and place the RKE Module into either the "DEALER LOT" storage or "CUSTOMER USAGE" modes of operation after receiving the vehicle from the assembly plant. Refer to Vehicle Theft/Security Systems, Switching Operating Modes/Configuring a New Module under Service Procedures.

REMOTE KEYLESS ENTRY TRANSMITTER

DESCRIPTION

Fig. 2 Remote Keyless Entry (Key Fob) Transmitter

The transmitter has three buttons for operation. They are **LOCK**, **UNLOCK**, and **PANIC**.

OPERATION

- The **UNLOCK** button will unlock the driver door and enable illuminated entry. Pushing and releasing the button once will unlock the driver door. Pushing and releasing the button two times within a five second period will unlock all doors (double unlock activation enabled).
- Upon pressing the **LOCK** button, the horn will sound a short chirp (if enabled) and flash the park lamps to notify that the all door lock signal was received and acted upon. Illuminated entry is cancelled and the interior lamps are faded to off.
- Pushing the **PANIC** button will cause the panic alarm to sound for three minutes, until the panic button is pressed a second time, or until the vehicle reaches a speed of 15 mph.

HORN CHIRP TOGGLE

DESCRIPTION

Once the transmitters have been programmed, the horn chirp can be enabled/disabled by sending the horn chirp toggle operation code to the RKE Module.

OPERATION

This can be done using a DRB lll® scan tool or by the customer. The horn chirp will enter the opposite state of its current programmed state by receiving this operation code. The RKE module is responsible for keeping track of the horn chirp status. Refer to Service Procedures, Horn Chirp Toggle within this section.

DIAGNOSIS AND TESTING

REMOTE KEYLESS ENTRY MODULE

For procedures on diagnosing and testing the RKE Module's RKE functions, refer to the proper Body Diagnostic Procedures Manual.

SERVICE PROCEDURES

HORN CHIRP TOGGLE

The toggling of the horn chirp (between enabled and disabled) can be performed with the use of the DRB III® scan tool or by the customer.

DRB III® PROGRAMMING

When using the DRB lll® scan tool, select:
(1) "Theft Alarm"
(2) "VTSS"
(3) "Miscellaneous"
and then the desired function.

CUSTOMER PROGRAMMING

Using a transmitter programmed to the RKE Module, the status of the horn chirp may be toggled by the customer.

NOTE: The RKE Module is responsible for keeping track of the horn chirp status; thus this procedure does not need to be repeated for each transmitter programmed to the system.

SERVICE PROCEDURES (Continued)

(1) With the ignition switch in RUN position, press and hold the transmitter Unlock button (Fig. 2) for a minimum of 4 seconds to a maximum of 10 seconds.

(2) While holding the UNLOCK button for 4-10 seconds, press the LOCK button (Fig. 2). A chime will be heard to indicate a successful toggle, at which time both buttons may be released.

SWITCHING OPERATING MODES/ CONFIGURING A NEW MODULE

Refer to Vehicle Theft/Security Systems, Switching Operating Modes/Configuring A New Module under Service Procedures.

TRANSMITTER PROGRAMMING

The Remote Keyless Entry transmitters can be programmed with the use of the DRB III® scan tool or by the customer.

DRB III® PROGRAMMING

When using the DRB lll® scan tool, select:

(1) “Theft Alarm”
(2) “VTSS”
(3) “Miscellaneous”
and then the desired function.

CUSTOMER PROGRAMMING

(1) Insert the key into the ignition switch, and turn the ignition switch to the RUN position (without starting the vehicle).

(2) Using the RKE transmitter programmed to the RKE module, press and continuously hold down the UNLOCK button for 4-10 seconds.

(3) Within the 4-10 second time range, continue to hold the UNLOCK button and press the PANIC button. Both buttons may then be released. Upon the PANIC button being depressed, the message for customer programming mode will be transmitted to the RKE module.

(4) A chime will be heard to verify that the customer programming mode has been entered.

(5) Press and release any button on each transmitter that is to be programmed to the RKE module, including any transmitters which were previously programmed to the RKE module (with a maximum of four possible). After each transmitter is successfully programmed, a chime will be heard to verify that successful programming of the transmitter has occurred.

(6) After thirty seconds, or upon the ignition switch being turned OFF, a chime will indicate that the RKE module has exited the programming mode.

REMOVAL AND INSTALLATION

REMOTE KEYLESS ENTRY (RKE) MODULE

REMOVAL

(1) Open hood.

(2) Disconnect and isolate the battery negative cable (Fig. 3).

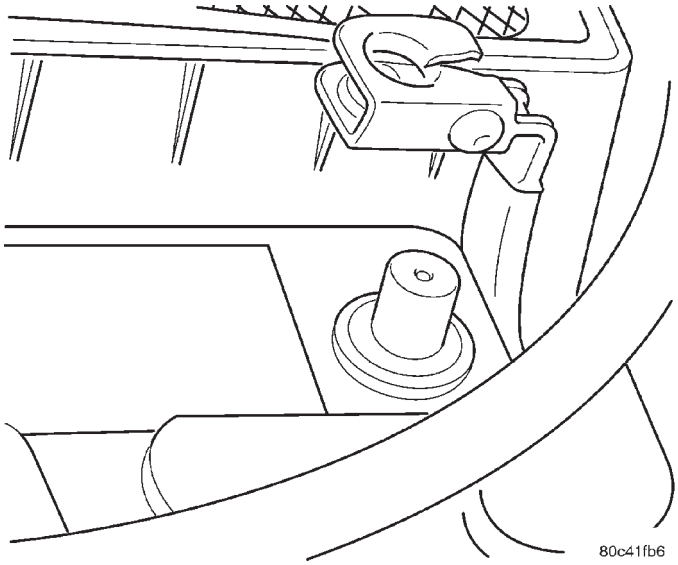

Fig. 3 Negative Battery Cable Remove/Install

(3) Remove the instrument panel top cover. Refer to Instrument Panel Systems, Instrument Pane Top Cover, Removal and Installation.

(4) Remove the two screws holding the RKE module to the instrument panel assembly (Fig. 4).

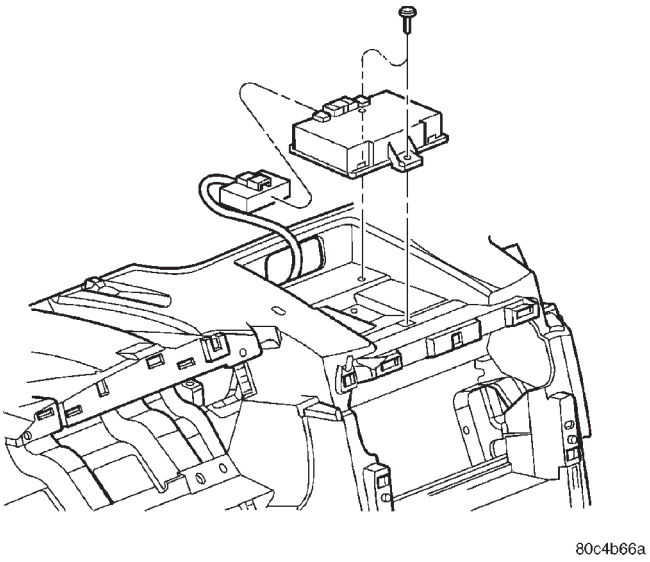

Fig. 4 RKE Module Remove/Install

REMOVAL AND INSTALLATION (Continued)

(5) Slide locking tab of the wiring connector sideways to unlock tab, and remove connector from RKE module.

(6) Remove RKE module from vehicle.

NOTE: When replacing a faulty RKE Module, the replacement module must be configured with the DRB III® scan tool for proper operation. Refer to Vehicle Theft/Security Systems, Switching Operating Modes/Configuring a New Module under Service Procedures. Additionally, all transmitters must be reprogrammed to the new RKE module.

INSTALLATION

(1) Install the RKE module on instrument panel.

(2) Connect the wiring harness connector to the RKE module. Slide locking tab of the wiring connector sideways to lock tab.

(3) Install the two screws holding the RKE module to the instrument panel assembly (Fig. 4).

(4) Install the instrument panel top cover. Refer to Instrument Panel Systems, Instrument Pane Top Cover Removal and Installation.

(5) Connect the battery negative cable (Fig. 3).

(6) Close hood.

(7) Verify vehicle and system operation.

RKE TRANSMITTER BATTERY

REMOVAL

(1) With the transmitter buttons facing down, use a coin to pry the two halves of the transmitter apart (Fig. 5). Make sure not to damage the rubber gasket during removal.

(2) Remove the battery from the transmitter case.

INSTALLATION

(1) Replace the batteries. Avoid touching the new batteries with your fingers, Skin oils may cause battery deterioration. If you touch a battery, clean it off with rubbing alcohol.

(2) To assemble the transmitter case, snap the two halves together.

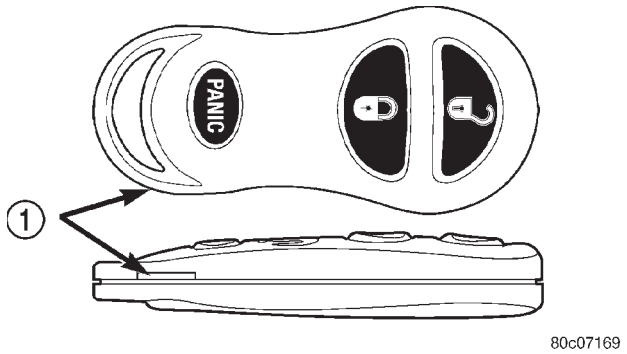

Fig. 5 RKE Transmitter Battery Replacement

1 – INSERT THIN COIN

SPECIFICATIONS

TRANSMITTER BATTERY

The transmitter has two 3 volt batteries, which can be removed and replaced without special tools. Insert a dime in the side slot of the transmitter and twist. The halves should separate and the batteries are stacked on top of each other (Fig. 2). The batteries are available at local retail stores. Recommended batteries are Panasonic CR 2016 or equivalent. Battery life is approximately two years. Transmitter programming is not necessary after replacement of the transmitter batteries.

TRANSMITTER RANGE

Operation range is within 7 meters (23 ft.) of the module/receiver.

POWER LOCK SYSTEMS

TABLE OF CONTENTS

page

REMOTE KEYLESS ENTRY 1

REMOTE KEYLESS ENTRY

TABLE OF CONTENTS

page

DESCRIPTION AND OPERATION
REMOTE KEYLESS ENTRY SYSTEM 1
REMOTE KEYLESS ENTRY TRANSMITTER 2
EXTERNAL ARKEM ANTENNA. 2
SERVICE PROCEDURES
TRANSMITTER PROGRAMMING 3
REMOVAL AND INSTALLATION
ALARM REMOTE KEYLESS ENTRY MODULE (ARKEM). 3
TRANSMITTER BATTERY 4
SPECIFICATIONS
TRANSMITTER BATTERY 4
TRANSMITTER RANGE 4

DESCRIPTION AND OPERATION

REMOTE KEYLESS ENTRY SYSTEM

DESCRIPTION

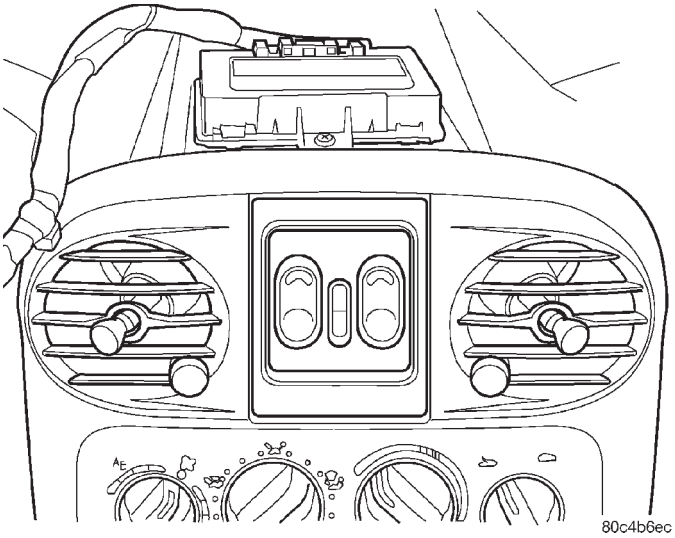

Fig. 1 Alarm Remote Keyless Entry (ARKEM) Module Location

The remote keyless entry system allows locking and unlocking of the vehicle door(s) and arming or disarming of the vehicle theft security system (if equipped), using the hand held radio frequency (RF) transmitter (Fig. 2).

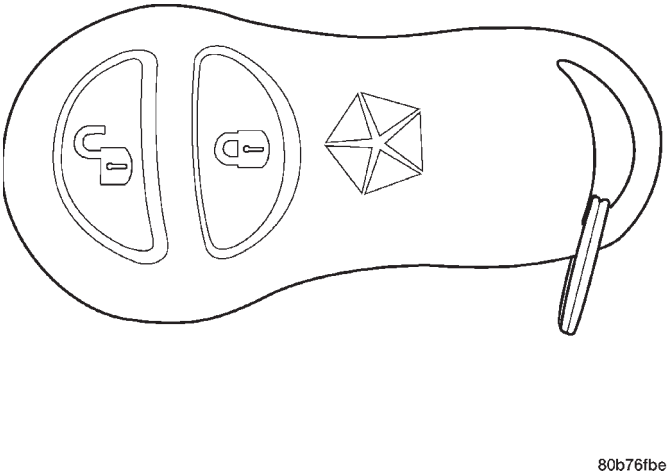

Fig. 2 Remote Keyless Entry (Key Fob) Transmitter

NOTE: The ARKE module must be in the "CUSTOMER USAGE" mode of operation for the remote keyless entry system to function.

DESCRIPTION AND OPERATION (Continued)

The receiver may receive signals from up to four transmitters. Each transmitter has its own code, and the code is programmed and stored into ARKE module memory. If a transmitter is replaced or additional transmitters are added, the codes for all units have to be reprogrammed into the ARKE module memory. If a receiver module is replaced, the transmitter codes must be stored in the new receiver memory (by performing the steps for programming transmitters). The ARKE module is capable of retaining all transmitter codes when power is removed from the module.

OPERATION

Operation of the Remote Keyless Entry system works in a similar manner to the central locking/unlocking feature. With the double activation unlock feature enabled, the first press of the transmitter UNLOCK button will electrically unlock the driver door, and a second press of the UNLOCK button (within five seconds of the first) will unlock all vehicle doors. With the double activation feature disabled, all vehicle doors will unlock upon the first press of the transmitter UNLOCK button. The vehicle is locked electrically by pressing the transmitter LOCK button once, regardless of the state of the double activation unlock feature. The vehicle is shipped with the double activation unlock feature enabled. Refer to the Vehicle Theft Security System section of the service manual for additional transmitter information.

The ARKE module has three modes of operation including customer usage mode, dealer lot storage mode, and shipping mode. The customer usage mode provides full functionality of the module and is the mode in which the ARKE module should be operating when used by the customer. Dealer lot storage mode and shipping modes are reduced power modes meant to extend vehicle battery life during shipping and storage in the dealer lot. Dealer lot storage mode provides limited VTSS (Vehicle Theft Security System) and power door lock functions, but disables the Alarm Remote Keyless Entry Module (ARKEM) functions. This mode is intended to be used when the vehicle is on the dealer lot to provide VTSS coverage of the vehicle while minimizing battery drain. Shipping mode disables all normal functions (i.e. power door locks, ARKE, and VTSS) of the module, and is intended to be used when the vehicle is shipped from the assembly plant. Refer to the Vehicle Theft Security System section of the service manual for additional information.

NOTE: The dealer must remove the module from "SHIP MODE" and place the ARKE Module into either the "DEALER LOT" storage or "CUSTOMER USAGE" modes of operation after receiving the vehicle from the assembly plant. Refer to Vehicle Theft/Security Systems, Switching Operating Modes/Configuring a New Module under Service Procedures.

REMOTE KEYLESS ENTRY TRANSMITTER

DESCRIPTION

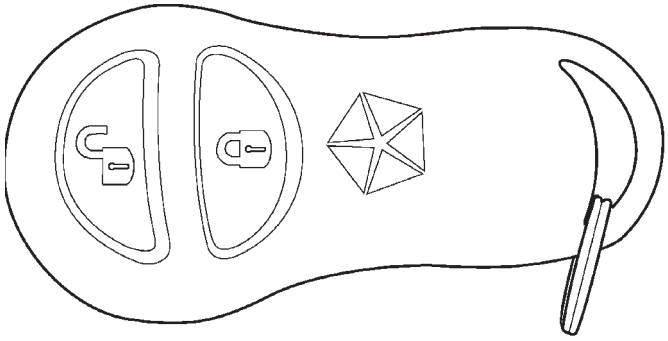

Fig. 3 Remote Keyless Entry (Key Fob) Transmitter - BUX

The transmitter has two buttons for operation. They are **LOCK** and **UNLOCK**.

OPERATION

- The **UNLOCK** button will unlock the driver door and enable illuminated entry and Vehicle Theft Security System (if equipped). Pushing and releasing the button once will unlock the driver door and disarm VTSS. Pushing and releasing the button two times within a five second period will unlock all doors (double unlock activation enabled).
- Upon pressing the **LOCK** button, the horn will sound a short chirp (some systems) and flash the park lamps (some systems) to notify that all door lock signal was received and acted upon. Illuminated entry is cancelled and the interior lamps are faded to off.

EXTERNAL ARKEM ANTENNA

DESCRIPTION

Vehicles designated for the Japan market are equipped with a external remote keyless entry module (ARKEM) antenna. This antenna attaches directly to the ARKE module and extends across the top of the instrument panel just below the I.P. top cover. The antenna can be identified by its 2.5 in. width and approx. 2 ft. length.

DESCRIPTION AND OPERATION (Continued)

OPERATION

Due to the radio frequency congestion in some markets a external antenna must be used to assist in frequency reception.

SERVICE PROCEDURES

TRANSMITTER PROGRAMMING

The Remote Keyless Entry transmitters can be programmed with the use of the DRB III® scan tool or by the customer.

DRB III® PROGRAMMING

When using the DRB III® scan tool, select:
(1) "Theft Alarm"
(2) "VTSS"
(3) "Miscellaneous"
and then the desired function.

CUSTOMER PROGRAMMING

(1) Insert the key into the ignition switch, and turn the ignition switch to the RUN position (without starting the vehicle).

(2) Using the RKE transmitter programmed to the RKE module, press and continuously hold down the UNLOCK button for 4-10 seconds.

(3) Within the 4-10 second time range, continue to hold the UNLOCK button and press the PANIC button. Both buttons may then be released. Upon the PANIC button being depressed, the message for customer programming mode will be transmitted to the RKE module.

(4) A chime will be heard to verify that the customer programming mode has been entered.

(5) Press and release any button on each transmitter that is to be programmed to the RKE module, including any transmitters which were previously programmed to the RKE module (with a maximum of four possible). After each transmitter is successfully programmed, a chime will be heard to verify that successful programming of the transmitter has occurred.

(6) After thirty seconds, or upon the ignition switch being turned OFF, a chime will indicate that the RKE module has exited the programming mode.

REMOVAL AND INSTALLATION

ALARM REMOTE KEYLESS ENTRY MODULE (ARKEM)

REMOVAL

(1) Remove the air filter housing from the vehicle.

(2) Disconnect and isolate the battery negative cable.

(3) Remove the instrument panel top cover. Refer to Instrument Panel Systems, Instrument Pane Top Cover, Removal and Installation.

(4) Remove the two screws holding the ARKEM module to the instrument panel assembly (Fig. 4).

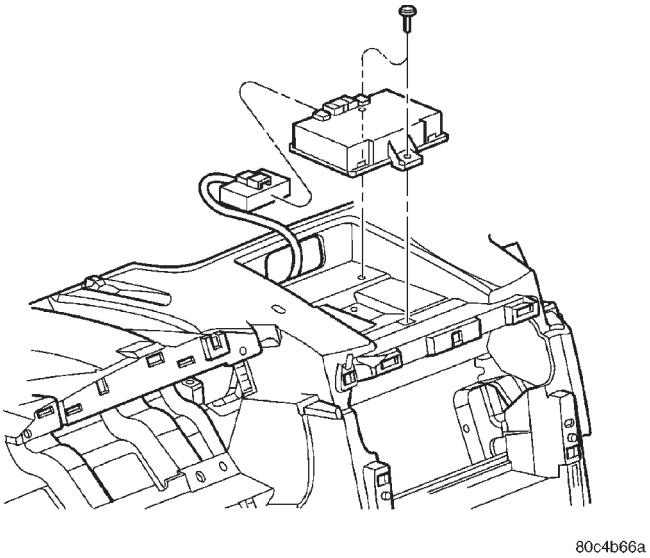

Fig. 4 ARKEM Module Remove/Install

(5) Slide locking tab of the wiring connector sideways to unlock tab, and remove connector from ARKEM module.

(6) Remove ARKEM module from vehicle.

NOTE: When replacing a faulty ARKEM Module, the replacement module must be configured with the DRB III® scan tool for proper operation. Refer to Vehicle Theft/Security Systems, Switching Operating Modes/Configuring a New Module under Service Procedures. Additionally, all transmitters must be reprogrammed to the new ARKEM module.

INSTALLATION

(1) Install the ARKEM module on instrument panel.

(2) Connect the wiring harness connector to the ARKEM module. Slide locking tab of the wiring connector sideways to lock tab.

(3) Install the two screws holding the ARKEM module to the instrument panel assembly (Fig. 4).

(4) Install the instrument panel top cover. Refer to Instrument Panel Systems, Instrument Pane Top Cover Removal and Installation.

(5) Connect the battery negative cable.

(6) Install the air filter housing.

(7) Verify vehicle and system operation.

REMOVAL AND INSTALLATION (Continued)

TRANSMITTER BATTERY

REMOVAL

(1) With the transmitter buttons facing down, use a coin to pry the two halves of the transmitter apart (Fig. 5). Make sure not to damage the rubber gasket during removal.

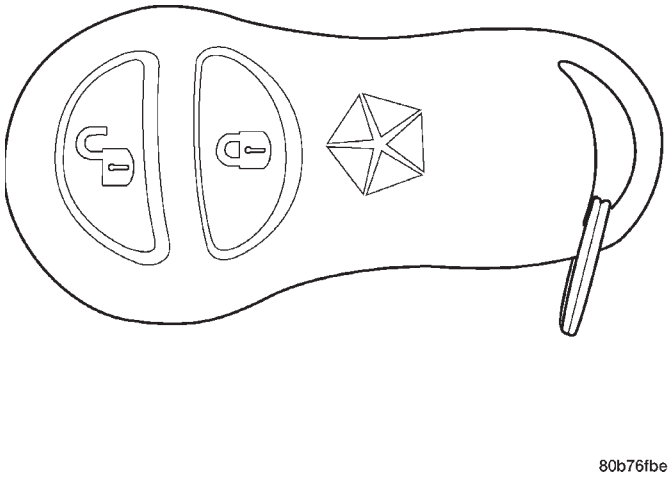

Fig. 5 Transmitter Battery Replacement

(2) Remove the battery from the transmitter case.

INSTALLATION

(1) Replace the batteries. Avoid touching the new batteries with your fingers, Skin oils may cause battery deterioration. If you touch a battery, clean it off with rubbing alcohol.

(2) To assemble the transmitter case, snap the two halves together.

SPECIFICATIONS

TRANSMITTER BATTERY

The transmitter has two 3 volt batteries, which can be removed and replaced without special tools. Insert a dime in the side slot of the transmitter and twist. The halves should separate and the batteries are stacked on top of each other (Fig. 3). The batteries are available at local retail stores. Recommended batteries are Panasonic CR 2016 or equivalent. Battery life is approximately two years. Transmitter programming is not necessary after replacement of the transmitter batteries.

TRANSMITTER RANGE

Operation range is within 7 meters (23 ft.) of the module/receiver. This specification may be less in some frequency congested areas of the world.

VEHICLE THEFT/SECURITY SYSTEMS

TABLE OF CONTENTS

page

DESCRIPTION AND OPERATION
VEHICLE THEFT/SECURITY SYSTEM (VTSS) . . . 1
SENTRY KEY IMMOBILIZER SYSTEM (SKIS) . . . 2
SENTRY KEY IMMOBILIZER MODULE (SKIM) 2
SENTRY KEY IMMOBILIZER SYSTEM INDICATOR LAMP 3
SENTRY KEY IMMOBILIZER TRANSPONDER . . . 4
DIAGNOSIS AND TESTING
SENTRY KEY IMMOBILIZER SYSTEM 4
VEHICLE THEFT/SECURITY SYSTEM (VTSS) . . . 5
SERVICE PROCEDURES
REMOTE KEYLESS ENTRY (RKE)/VEHICLE THEFT/SECURITY SYSTEM (VTSS) - SWITCHING OPERATING MODES/ CONFIGURING A NEW MODULE. 5
SENTRY KEY IMMOBILIZER SYSTEM INITIALIZATION 5
SENTRY KEY IMMOBILIZER SYSTEM TRANSPONDER PROGRAMMING 6
TRIGGERING THE VTSS (WHEN IT IS ARMED) 7
REMOVAL AND INSTALLATION
DOOR CYLINDER LOCK SWITCH. 7
HOOD AJAR SWITCH 8
LIFTGATE CYLINDER LOCK SWITCH 8
REMOTE KEYLESS ENTRY (RKE) MODULE 8
SENTRY KEY IMMOBILIZER MODULE (SKIM) 9

DESCRIPTION AND OPERATION

VEHICLE THEFT/SECURITY SYSTEM (VTSS)

DESCRIPTION

The Vehicle Theft/Security System (VTSS) is designed to protect against whole vehicle theft. The system monitors vehicle doors, hood, liftgate, and ignition for unauthorized operation.

The VTSS activates:

- Sounding of the horn.
- Flashing of the park lamps.
- Flashing of the headlamps.

The RKE Module has three modes of operation including **CUSTOMER USAGE** mode, **DEALER LOT STORAGE** mode, and **SHIPPING MODE**. The customer usage mode provides full functionality of the module and is the mode in which the RKE Module should be operating when used by the customer. Dealer lot storage mode and shipping mode are reduced power modes meant to extend vehicle battery life during shipping and storage in the dealer lot. Dealer lot storage mode provides limited VTSS and power door lock functions, and disables the Remote Keyless Entry (RKE) functions. This mode is intended to be used when the vehicle is on the dealer lot to provide VTSS coverage of the vehicle while minimizing battery drain. Shipping mode disables all normal functions of the module with the exception of communications over the vehicle's PCI bus, and is intended to be used when the vehicle is shipped from the assembly plant. The dealer must remove the module from shipping mode and place it into either the dealer lot storage or customer usage modes of operation.

NOTE: The dealer must remove the module from "SHIP MODE" and place the RKE Module into either the "DEALER LOT" storage or "CUSTOMER USAGE" modes of operation after receiving the vehicle from the assembly plant. Refer to Switching Operating Modes/Configuring a New Module under Service Procedures in this section.

OPERATION

Once in the CUSTOMER USAGE mode of operation, the system is armed when the vehicle is locked using the:

- Power door lock switches.
- Remote Keyless Entry (RKE) transmitter.
- Key cylinder switches.

After the vehicle is locked and the last door is closed, the circular red VTSS indicator in the instrument cluster will flash quickly for 16 seconds, indicating that arming is in progress. If no monitored systems are activated during this period (excluding the hood), the system will arm. After 16 seconds, the

DESCRIPTION AND OPERATION (Continued)

LED will continue to flash at a slower rate indicating the system is armed.

If the hood ajar switch is not sensed by the system, the indicator LED will remain lit during the arming process, although the system will still arm. If the VTSS indicator does not illuminate at all upon door closing it indicates that the system is not arming.

VTSS disarming occurs upon normal vehicle entry by unlocking either door or liftgate via the key cylinders or RKE transmitter, or by starting the vehicle with a valid Sentry Key. This disarming will also halt the alarm once it has been activated.

A tamper alert exists to notify the driver that the system had been activated. This alert consists of 3 horn pulses when the vehicle is disarmed.

The VTSS will not arm by mechanically locking the vehicle doors. This will manually override the system.

NOTE: In the dealer lot storage mode of operation, all of the above descriptions of the VTSS are true with the following exceptions:

- **Remote Keyless Entry functions are disabled, and cannot be used for arming/disarming the VTSS.**
- **The VTSS indicator is non-operational.**

SENTRY KEY IMMOBILIZER SYSTEM (SKIS)

DESCRIPTION

The Sentry Key Immobilizer System (SKIS) is designed to provide passive protection against unauthorized vehicle use by preventing the engine from operating. The components of this system are the Sentry Key Immobilizer Module (SKIM), Instrument Cluster, Sentry Key transponder, VTSS indicator LED, and the Powertrain Control Module (PCM).

The SKIM is installed on the steering column near the ignition lock cylinder. The transponder is located under the molded rubber cap on the head of the ignition key. The VTSS indicator LED is located in the instrument cluster.

OPERATION

The SKIS includes two valid Sentry Key transponders from the factory. These two Sentry Keys can be used to program additional non-coded blank Sentry Keys. These blank keys can be cut to match a valid ignition key, but the engine will not start unless the key transponder is also programmed to the vehicle. The SKIS will recognize no more than eight valid Sentry Key transponders at any one time.

The SKIS performs a self-test each time the ignition switch is turned to the ON position, and will store Diagnostic Trouble Codes (DTC's) if a system malfunction is detected. The SKIS can be diagnosed, and any stored DTC can be retrieved using a DRB III® scan tool as described in the proper Powertrain Diagnostic Procedures manual.

SENTRY KEY IMMOBILIZER MODULE (SKIM)

DESCRIPTION

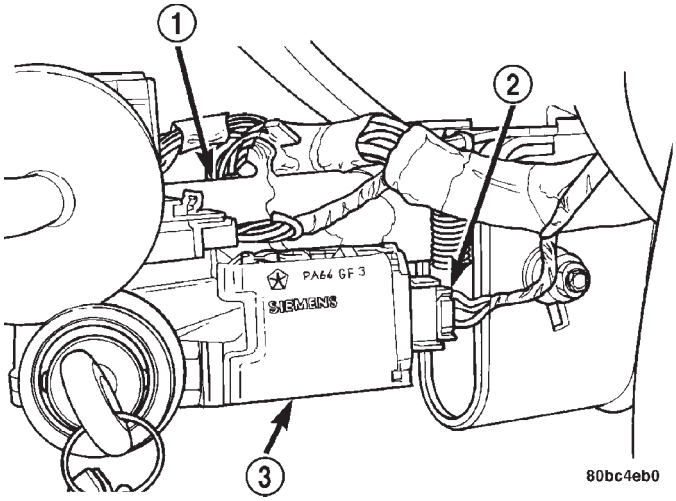

Fig. 1 Sentry Key Immobilizer Module (SKIM) Location

1 – STEERING COLUMN
2 – SKIM ELECTRICAL CONNECTOR
3 – SKIM

The Sentry Key Immobilizer Module (SKIM) contains a Radio Frequency (RF) transceiver and a central processing unit, which includes the Sentry Key Immobilizer System (SKIS) program logic. The SKIS programming enables the SKIM to program and retain in memory the codes of at least two, but no more than eight electronically coded Sentry Key transponders. The SKIS programming also enables the SKIM to communicate over the Programmable Communication Interface (PCI) bus network with the Powertrain Control Module (PCM), and/or the DRB III® scan tool.

OPERATION

The SKIM transmits and receives RF signals through a tuned antenna enclosed within a molded plastic ring formation that is integral to the SKIM housing. When the SKIM is properly installed on the steering column, the antenna ring is oriented around the circumference of the ignition lock cylinder housing (Fig. 1). This antenna ring must be located within eight millimeters (0.31 inches) of the Sentry Key in order to ensure proper RF communication between the SKIM and the Sentry Key transponder.

For added system security, each SKIM is programmed with a unique "Secret Key" code and a security code. The SKIM keeps the "Secret Key" code

DESCRIPTION AND OPERATION (Continued)

in memory. The SKIM also sends the "Secret Key" code to each of the programmed Sentry Key transponders. The security code is used by the assembly plant to access the SKIS for initialization, or by the dealer technician to access the system for service. The SKIM also stores in its memory the Vehicle Identification Number (VIN), which it learns through a PCI bus message from the PCM during initialization.

The SKIM and the PCM both use software that includes a rolling code algorithm strategy, which helps to reduce the possibility of unauthorized SKIS disarming. The rolling code algorithm ensures security by preventing an override of the SKIS through the unauthorized substitution of the SKIM or the PCM. However, the use of this strategy also means that replacement of either the SKIM or the PCM units will require a system initialization procedure to restore system operation.

When the ignition switch is turned to the ON or START positions, the SKIM transmits an RF signal to excite the Sentry Key transponder. The SKIM then listens for a return RF signal from the transponder of the Sentry Key that is inserted in the ignition lock cylinder. If the SKIM receives an RF signal with valid "Secret Key" and transponder identification codes, the SKIM sends a "valid key" message to the PCM over the PCI bus. If the SKIM receives an invalid RF signal or no response, it sends "invalid key" messages to the PCM. The PCM will enable or disable engine operation based upon the status of the SKIM messages.

The SKIM also sends messages to the Instrument Cluster which controls the VTSS indicator LED. The SKIM sends messages to the Instrument Cluster to turn the LED on for about three seconds when the ignition switch is turned to the ON position as a bulb test. After completion of the bulb test, the SKIM sends bus messages to keep the LED off for a duration of about one second. Then the SKIM sends messages to turn the LED on or off based upon the results of the SKIS self-tests. If the VTSS indicator LED comes on and stays on after the bulb test, it indicates that the SKIM has detected a system malfunction and/or that the SKIS has become inoperative.

If the SKIM detects an invalid key when the ignition switch is turned to the ON position, it sends messages to flash the VTSS indicator LED. The SKIM can also send messages to flash the LED and to generate a single audible chime tone. These functions serve as an indication to the customer that the SKIS has been placed in its "Customer Learn" programming mode. See Sentry Key Immobilizer System Transponder Programming in this section for more information on the "Customer Learn" programming mode.

For diagnosis or initialization of the SKIM and the PCM, a DRB III® scan tool and the proper Powertrain Diagnostic Procedures manual are required. The SKIM cannot be repaired and, if faulty or damaged, the unit must be replaced.

SENTRY KEY IMMOBILIZER SYSTEM INDICATOR LAMP

DESCRIPTION

The Sentry Key Immobilizer System (SKIS) uses the Vehicle Theft Security System (VTSS) indicator LED to give an indication when the SKIS is faulty or when the vehicle has been immobilized due to the use of an invalid ignition key. The LED is controlled by the instrument cluster circuitry based upon messages received from the Sentry Key Immobilizer Module (SKIM).

OPERATION

The SKIM sends messages to the instrument cluster, to turn the LED on for about three seconds when the ignition switch is turned to the ON position as a bulb test. After completion of the bulb test, the SKIM sends PCI bus messages to keep the LED off for a duration of about one second. Then the SKIM sends messages to the instrument cluster circuitry to turn the LED on or off based upon the results of the SKIS self-tests. If the VTSS indicator LED comes on and stays on after the bulb test, it indicates that the SKIM has detected a system malfunction and/or that the SKIS has become inoperative. If the SKIM detects an invalid key when the ignition switch is turned to the ON position, it sends messages to the instrument cluster to flash the VTSS indicator LED.

The SKIM can also send messages to the instrument cluster to flash the LED and to generate a single audible chime tone. These functions serve as an indication to the customer that the SKIS has been placed in its "Customer Learn" programming mode. See Sentry Key Immobilizer System Transponder Programming in this group for more information on the "Customer Learn" programming mode.

The VTSS indicator LED uses a Light Emitting Diode (LED) on the instrument cluster electronic circuit board. It is not serviceable separate from the instrument cluster assembly. If the VTSS indicator LED comes on and stays on after the bulb test function, diagnosis of the SKIS should be performed with a DRB III® scan tool and the proper Powertrain Diagnostic Procedures manual.

DESCRIPTION AND OPERATION (Continued)

SENTRY KEY IMMOBILIZER TRANSPONDER

DESCRIPTION

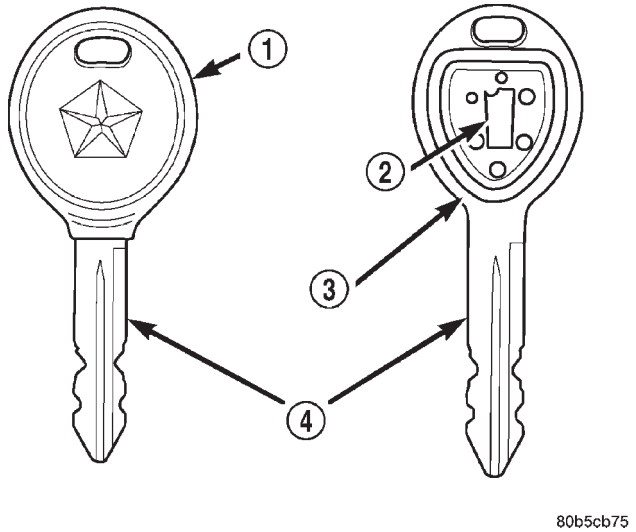

Fig. 2 Sentry Key Immobilizer Transponder

1 – MOLDED CAP
2 – TRANSPONDER
3 – MOLDED CAP REMOVED
4 – SENTRY KEY

The Sentry Key Immobilizer System (SKIS) uses a transponder that is integral to each of two ignition key that are supplied with the vehicle when it is shipped from the factory. The transponder chip is insulated within a nylon mount inserted in the head of the key, and invisible beneath a molded rubber cap.

OPERATION

Each Sentry Key transponder has a unique transponder identification code programmed into it by the manufacturer. The Sentry Key Immobilizer Module (SKIM) has a unique “Secret Key” code programmed into it by the manufacturer. When a Sentry Key transponder is programmed into the memory of the SKIM, the SKIM learns the transponder identification code from the transponder, and the transponder learns the “Secret Key” code from the SKIM. Each of these codes is stored within the transponder and in the nonvolatile memory of the SKIM. Therefore, blank keys for the SKIS must be programmed by and into the SKIM, in addition to being cut to match the mechanical coding of the ignition lock cylinder. See Sentry Key Immobilizer System Transponder Programming in this section for more information.

The Sentry Key transponder is within the range of the SKIM transceiver antenna ring when it is inserted in the ignition lock cylinder. When the ignition switch is turned to the START or ON positions, the SKIM transceiver issues a Radio Frequency (RF) signal that excites the transponder chip. The transponder chip responds by issuing an RF signal containing its transponder identification code and the “Secret Key” code. The SKIM transceiver compares the transponder codes with the codes stored in its memory to determine whether a valid key is in the ignition lock cylinder.

The Sentry Key transponder cannot be repaired and, if faulty or damaged, it must be replaced.

DIAGNOSIS AND TESTING

SENTRY KEY IMMOBILIZER SYSTEM

WARNING: ON VEHICLES EQUIPPED WITH AIRBAGS, REFER TO RESTRAINT SYSTEMS BEFORE ATTEMPTING ANY STEERING WHEEL, STEERING COLUMN, OR INSTRUMENT PANEL COMPONENT DIAGNOSIS OR SERVICE. FAILURE TO TAKE THE PROPER PRECAUTIONS COULD RESULT IN ACCIDENTAL AIRBAG DEPLOYMENT AND POSSIBLE PERSONAL INJURY.

NOTE: The following tests may not prove conclusive in the diagnosis of this system. The most reliable, efficient, and accurate means to diagnose the Sentry Key Immobilizer System (SKIS) involves the use of a DRB III® scan tool and the proper Powertrain Diagnostic Procedures manual.

The Sentry Key Immobilizer System (SKIS) and the Programmable Communication Interface (PCI) bus network should be diagnosed using a DRB III® scan tool. The DRB III® will allow confirmation that the PCI bus is functional, that the Sentry Key Immobilizer Module (SKIM) is placing the proper messages on the PCI bus, and that the Powertrain Control Module (PCM) and the instrument cluster are receiving the PCI bus messages. Refer to the proper Powertrain Diagnostic Procedures manual. Refer to Wiring Diagrams for complete circuit descriptions and diagrams.

(1) Check the fuses in the fuse block. If OK, go to Step 2. If not OK, repair the shorted circuit or component as required and replace the faulty fuse.

(2) Disconnect and isolate the battery negative cable (Fig. 3). Unplug the wire harness connector at the SKIM. Check for continuity between the ground circuit cavity of the SKIM wire harness connector and a good ground. There should be continuity. If OK, go to Step 3. If not OK, repair the open circuit to ground as required.

(3) Connect the battery negative cable. Check for battery voltage at the fused B(+) circuit cavity of the

DIAGNOSIS AND TESTING (Continued)

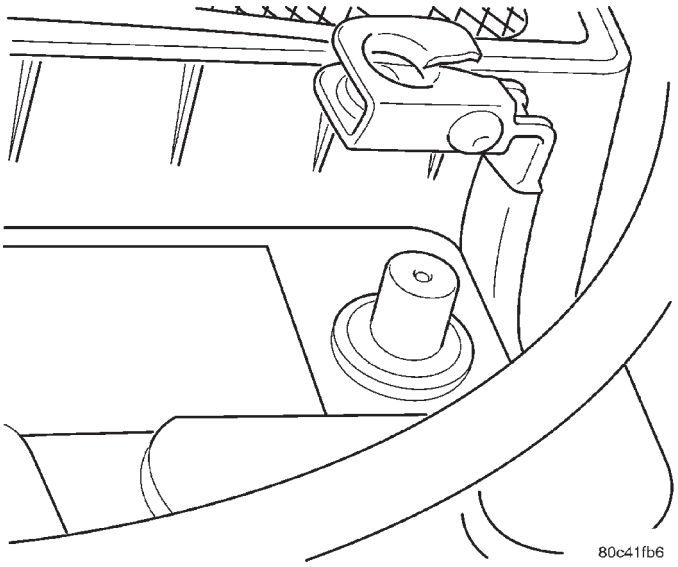

Fig. 3 Battery Negative Cable Remove/Install

SKIM wire harness connector. If OK, go to Step 4. If not OK, repair the open circuit to the fuse in the fuse block as required.

(4) Turn the ignition switch to the ON position. Check for battery voltage at the fused ignition switch output (run/start) circuit cavity of the SKIM wire harness connector. If OK, use a DRB III® scan tool and the proper Powertrain Diagnostic Procedures manual to complete the diagnosis of the SKIS. If not OK, repair the open circuit to the fuse in the fuse block as required.

VEHICLE THEFT/SECURITY SYSTEM (VTSS)

To diagnose the Vehicle Theft/Security Sytem (VTSS), use a DRB III® scan tool and the proper Body Diagnostic Procedures Manual.

SERVICE PROCEDURES

REMOTE KEYLESS ENTRY (RKE)/VEHICLE THEFT/SECURITY SYSTEM (VTSS) - SWITCHING OPERATING MODES/ CONFIGURING A NEW MODULE

To switch operating modes or to configure a new module, a DRB III® scan tool must be used.

(1) Hook up the DRB III® scan tool to the Data Link Connector (DLC) (Fig. 4).

(2) With the key in the ignition, turn the key to the RUN position.

(3) After the DRB III® scan tool initialization, perform the following:

(a) Select “Theft Alarm.”

(b) Select “VTSS.”

(c) Select “Miscellaneous.”

(4) Once in the “Miscellaneous” screen:

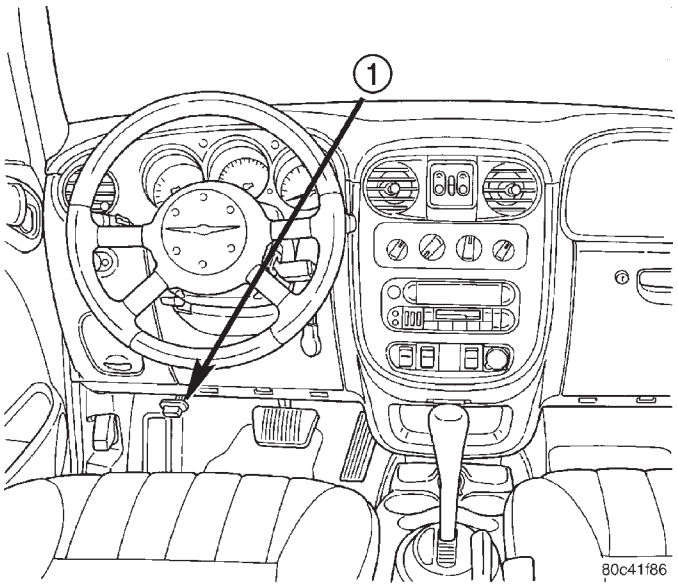

Fig. 4 Data Link Connector (DLC) Location

1 – DATA LINK CONNECTOR (DLC)

(a) If you wish to configure a new module, select “Configure Module.”

(b) If you wish to put the module into customer usage mode, select “Enable VTSS.”

(c) If you wish to put the module into dealer lot mode, select “Dealer Lot.”

SENTRY KEY IMMOBILIZER SYSTEM INITIALIZATION

The Sentry Key Immobilizer System (SKIS) initialization should be performed following a Sentry Key Immobilizer Module (SKIM) replacement.

It can be summarized by the following:

(1) Obtain the vehicles unique PIN number assigned to it’s original SKIM from the vehicle owner, the vehicle’s invoice or from Chrysler’s Customer Center.

(2) With the DRB III® scan tool, select “Theft Alarm,” “SKIM,” Miscellaneous.” Select “SKIM Module Replaced” function and the DRB III® will prompt you through the following steps.

(3) Enter secured access mode using the unique four digit PIN number.

(4) Program the vehicle’s VIN number into the SKIM’s memory.

(5) Program the country code into the SKIM’s memory (U.S.).

(6) Transfer the vehicle’s unique Secret Key data from the PCM. This process will require the SKIM to be in **secured access mode**. The PIN number must be entered into the DRB III® before the SKIM will enter **secured access mode**. Once **secured access mode** is active, the SKIM will remain in that mode for 60 seconds.

SERVICE PROCEDURES (Continued)

(7) Program all customer keys into the SKIM's memory. This required that the SKIM be in **secured access mode** The SKIM will immediately exit **secured access mode** after each key is programmed.

NOTE: If a PCM is replaced, the unique "Secret Key" data must be transferred from the SKIM to the PCM. This procedure requires the SKIM to be placed in SECURED ACCESS MODE using the four digit PIN code.

SENTRY KEY IMMOBILIZER SYSTEM TRANSPONDER PROGRAMMING

Two programmed Sentry Key transponders are included with the Sentry Key Immobilizer System (SKIS) when it is shipped from the factory. The Sentry Key Immobilizer Module (SKIM) can be programmed to recognize up to six additional transponders, for a total of eight Sentry Keys. The following "Customer Learn" programming procedure for the programming of additional transponders requires access to at least two of the valid Sentry Keys. If two valid Sentry Keys are not available, Sentry Key programming will require the use of a DRB III® scan tool.

CUSTOMER LEARN PROGRAMMING

(1) Obtain the additional Sentry Key transponder blank(s) that are to be programmed for the vehicle. Cut the additional Sentry Key transponder blanks to match the ignition lock cylinder mechanical key codes.

(2) Insert one of the two valid Sentry Key transponders into the ignition switch and turn the ignition switch to the ON position.

(3) After the ignition switch has been in the ON position for about three seconds, but no more than fifteen seconds, cycle the ignition switch back to the OFF position. Replace the first valid Sentry Key in the ignition lock cylinder with the second valid Sentry Key and turn the ignition switch back to the ON position. Both operations must be performed within 15 seconds.

(4) About ten seconds after the completion of Step 3, the VTSS indicator LED will start to flash and a single audible chime tone will sound to indicate that the system has entered the "Customer Learn" programming mode.

(5) Within about fifty seconds of entering the "Customer Learn" programming mode, turn the ignition switch to the OFF position, replace the valid Sentry Key with a blank Sentry Key transponder, and turn the ignition switch back to the ON position.

(6) About ten seconds after the completion of Step 5, a single audible chime tone will sound and the VTSS indicator LED will stop flashing and stay on solid for about three seconds and then turn OFF to indicate that the blank Sentry Key transponder has been successfully programmed. The SKIS will immediately return to normal system operation following exit from the "Customer Learn" programming mode.

(7) Go back to Step 2 and repeat this process for each additional Sentry Key transponder blank to be programmed.

If any of the above steps is not completed in the proper sequence, or within the allotted time, the SKIS will automatically exit the "Customer Learn" programming mode. The SKIS will also automatically exit the "Customer Learn" programming mode if it sees a non-blank Sentry Key transponder when it should see a blank, if it has already programmed eight valid Sentry Keys, or if the ignition switch is turned to the OFF position for more than about fifty seconds.

NOTE: While in Customer Learn mode (LED flashing), the engine will not START and RUN.

PROGRAMMING BLANK SENTRY KEY TRANSPONDERS WITH A DRB III® SCAN TOOL

When programming a blank Sentry Key transponder, the key blank must first be cut to match the ignition lock cylinder. It will also be necessary to enter the vehicle's four digit PIN code into the DRB III® scan tool to enter the Sentry Key Immobilizer Module's (SKIM's) secured access mode.

NOTE: Once a Sentry Key is programmed to a particular vehicle, it cannot be transferred to another vehicle.

Insert the blank key into the ignition and turn it to the RUN position. Using the DRB III® scan tool, select "Theft Alarm," then "SKIM," then "Miscellaneous." Select "Program New Key." Enter the four digit PIN code using the DRB III®. When programming is completed, the SKIM will exit secured access mode and the DRB III® will display the status of the key. One of five different status messages may be displayed as follows:

- "Programming Successful" is displayed if SKIM Sentry Key programming succeeds.
- "Learned Key in Ignition" is displayed if the key in the ignition has already been programmed into that vehicle's SKIM.
- "8 Keys Already Learned (At The Maximum) Programming Not Done" is displayed if eight keys have already been programmed into the SKIM. In this case, if a new key needs to be added due to a

SERVICE PROCEDURES (Continued)

lost or defective key, the “Erase All Keys” function (requires entering secured access mode) has to be performed. Then the customer’s seven keys plus the new key MUST be reprogrammed into the SKIM.

- “Programming Not Attempted” is displayed after an “Erase All Keys” function is executed.
- “Programming Key Failed” is displayed if further diagnosis is required.
- To learn additional keys, turn the ignition OFF, remove the learned key, and insert the next new blank key. Turn ignition to the RUN position and re-enter the secured access mode function and repeat the “Program New Key” procedure outlined above.

TRIGGERING THE VTSS (WHEN IT IS ARMED)

ARMING THE SYSTEM

Locking the power door switch or the keyless transmitter will arm the system, or locking any door or liftgate with the key cylinder switch.

NOTE: The ignition switch can be turned to the ACCESSORY position without triggering alarm system.

ACTIVATE THE ALARM

Any of the following actions will trigger the system:

(1) Opening any door or liftgate.
(2) Opening the hood.
(3) Turning the ignition to the ON position with an invalid key.

REMOVAL AND INSTALLATION

DOOR CYLINDER LOCK SWITCH

REMOVAL

(1) Open hood.
(2) Disconnect and isolate the battery negative cable (Fig. 3).
(3) Remove front door trim panel. Refer to Body, Front Door Trim Removal and Installation.
(4) Remove door cylinder lock switch from door lock cylinder (Fig. 5).
(5) Remove the switch from the inside of the door by pulling the switch and attached wires out of the door.
(6) Cut the two wires leading to the bad switch, at least three inches from where the wires enter the switch.
(7) Splice in the new switch. Refer to Wiring Diagrams for splicing information.

INSTALLATION

(1) Route the door cylinder lock switch inside the door panel.
(2) Install door cylinder lock switch on rear of door lock cylinder (Fig. 5).

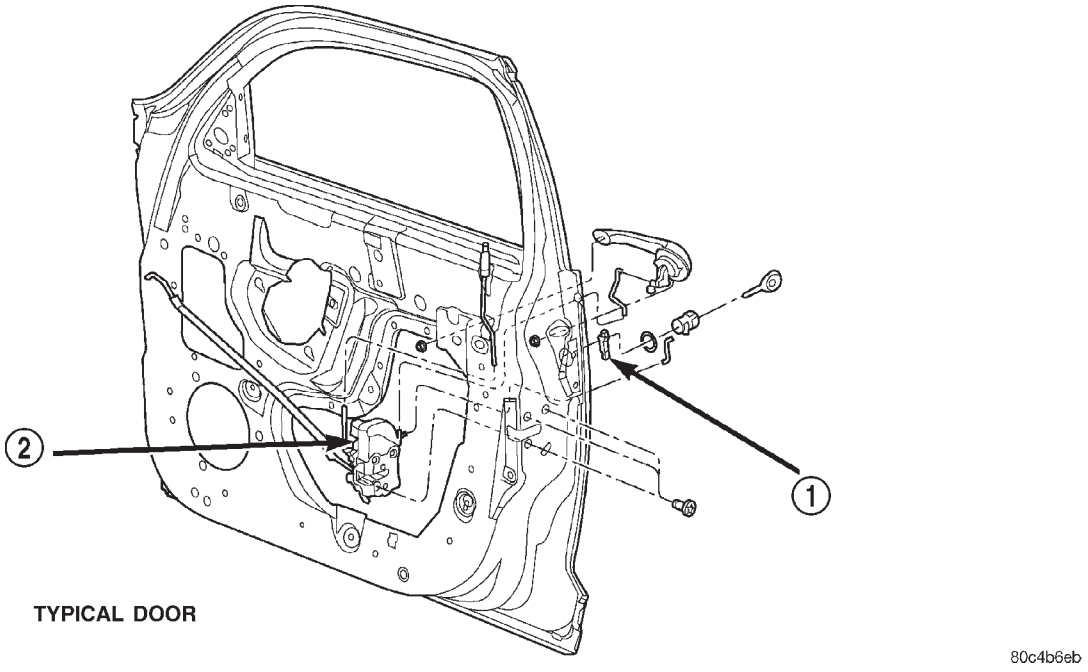

Fig. 5 Door Cylinder Lock Switch Remove/Install - Typical

1 – CYLINDER LOCK SWITCH
2 – DOOR LOCK MOTOR

REMOVAL AND INSTALLATION (Continued)

(3) Install the front door trim panel. Refer to Body, Front Door Trim Removal and Installation.
(4) Connect the battery negative cable (Fig. 3).
(5) Close hood.
(6) Verify vehicle and system operation.

HOOD AJAR SWITCH

REMOVAL

(1) Open hood.
(2) Disconnect and isolate the battery negative cable (Fig. 3).
(3) Disconnect wire harness connector from hood ajar switch.
(4) Firmly press tangs on the bottom side of the switch together and push up through bracket (Fig. 6).

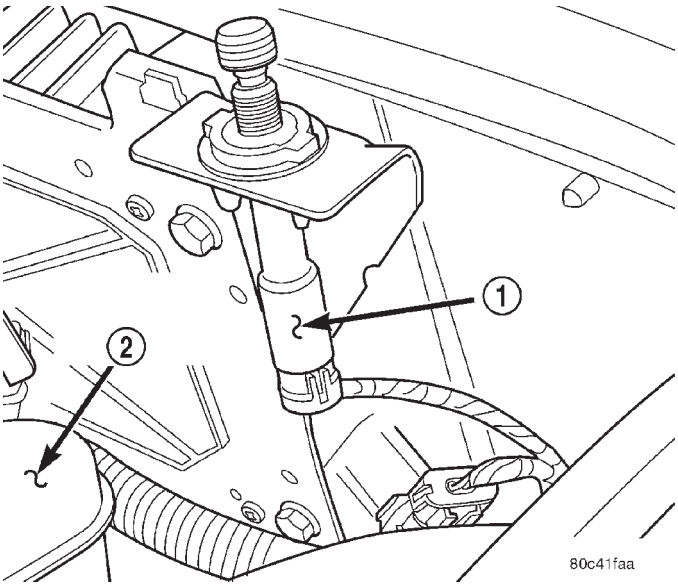

Fig. 6 Hood Ajar Switch Location

1 – HOOD AJAR SWITCH CONNECTOR
2 – BRAKE FLUID RESERVOIR

(5) Remove switch from vehicle.

INSTALLATION

(1) Firmly press hood ajar switch through bracket (Fig. 6).
(2) Connect wire harness connector to hood ajar switch.
(3) Connect the battery negative cable (Fig. 3).
(4) Close hood.
(5) Verify vehicle and system operation.

LIFTGATE CYLINDER LOCK SWITCH

REMOVAL

(1) Open hood.
(2) Disconnect and isolate the battery negative cable (Fig. 3).
(3) Remove the liftgate trim panel. Refer to Body, Liftgate Trim Panel, Removal and Installation.
(4) Remove the liftgate cylinder U-bracket by sliding it out.
(5) Remove switch E-clip and disconnect connector.
(6) Remove liftgate cylinder lock switch from liftgate lock cylinder (Fig. 7) by gently unsnapping.

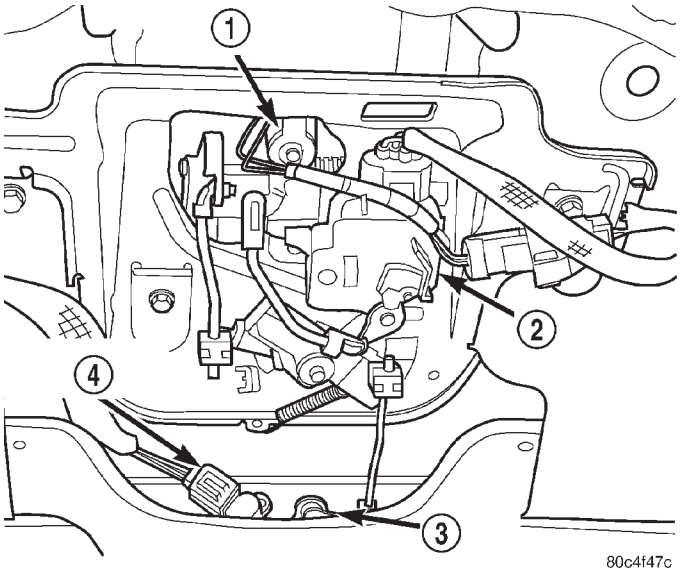

Fig. 7 Liftgate Cylinder Lock Switch Location

1 – LIFTGATE CYLINDER LOCK SWITCH
2 – LIFTGATE LOCK MOTOR
3 – LATCH ASSEMBLY
4 – LIFTGATE AJAR SWITCH

INSTALLATION

(1) Install liftgate cylinder lock switch on rear of liftgate lock cylinder without rotating the switch (Fig. 5).
(2) Install the liftgate cylinder U-bracket by sliding it in.
(3) Install switch E-clip and connector.
(4) Install the liftgate trim panel. Refer to Body, Liftgate Trim Panel Removal and Installation.
(5) Connect the battery negative cable (Fig. 3).
(6) Close hood.
(7) Verify vehicle and system operation.

REMOTE KEYLESS ENTRY (RKE) MODULE

REMOVAL

(1) Open hood.
(2) Disconnect and isolate the battery negative cable (Fig. 8).
(3) Remove the instrument panel top cover. Refer to Instrument Panel Systems, Instrument Pane Top Cover, Removal and Installation.
(4) Remove the two screws holding the RKE module to the instrument panel assembly (Fig. 9).

REMOVAL AND INSTALLATION (Continued)

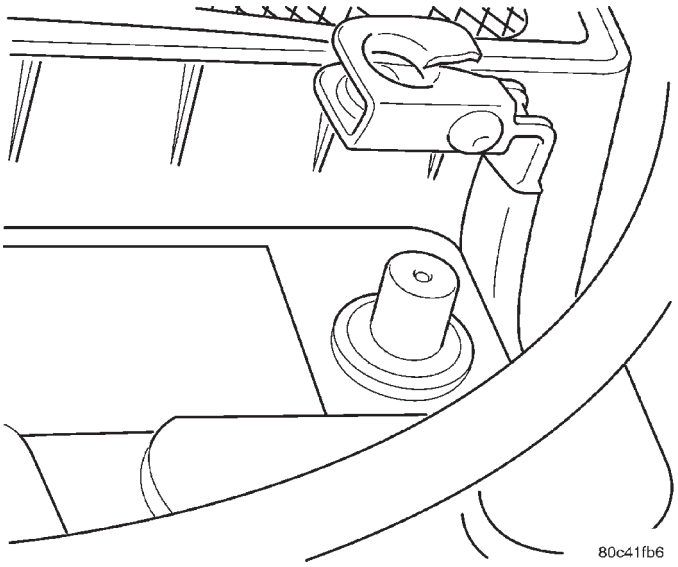

Fig. 8 Negative Battery Cable Remove/Install

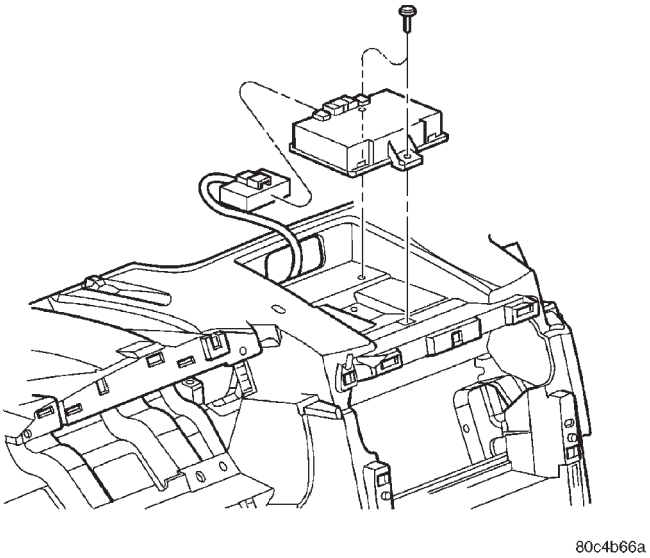

Fig. 9 RKE Module Remove/Install

(5) Slide locking tab of the wiring connector sideways to unlock tab, and remove connector from RKE module.

(6) Remove RKE module from vehicle.

NOTE: When replacing a faulty RKE Module, the replacement module must be configured with the DRB III® scan tool for proper operation. Refer to Vehicle Theft/Security Systems, Switching Operating Modes/Configuring a New Module under Service Procedures. Additionally, all transmitters must be reprogrammed to the new RKE module.

INSTALLATION

(1) Install the RKE module on instrument panel.

(2) Connect the wiring harness connector to the RKE module. Slide locking tab of the wiring connector sideways to lock tab.

(3) Install the two screws holding the RKE module to the instrument panel assembly (Fig. 9).

(4) Install the instrument panel top cover. Refer to Instrument Panel Systems, Instrument Pane Top Cover Removal and Installation.

(5) Connect the battery negative cable (Fig. 8).

(6) Close hood.

(7) Verify vehicle and system operation.

SENTRY KEY IMMOBILIZER MODULE (SKIM)

WARNING: ON VEHICLES EQUIPPED WITH AIRBAGS, REFER TO RESTRAINT SYSTEMS BEFORE ATTEMPTING ANY STEERING WHEEL, STEERING COLUMN, OR INSTRUMENT PANEL COMPONENT DIAGNOSIS OR SERVICE. FAILURE TO TAKE THE PROPER PRECAUTIONS COULD RESULT IN ACCIDENTAL AIRBAG DEPLOYMENT AND POSSIBLE PERSONAL INJURY.

REMOVAL

(1) Open hood.

(2) Disconnect and isolate the battery negative cable (Fig. 3).

(3) Remove the steering column upper and lower shrouds. Refer to Instrument Panel Systems, Steering Column Shroud Removal and Installation.

(4) Disconnect the steering column wire harness connector from the Sentry Key Immobilizer Module (SKIM) (Fig. 10).

(5) Remove the two screws securing the SKIM module to the top of the steering column (Fig. 10).

(6) Rotate the SKIM and its mounting bracket upwards and then to the side away from the steering column to slide the SKIM antenna ring from around the ignition switch lock cylinder housing (Fig. 10).

(7) Remove the SKIM from the vehicle.

INSTALLATION

NOTE: If the SKIM is replaced with a new unit, a DRB III® scan tool MUST be used to initialize the new SKIM and to program at least two Sentry Key transponders. Refer to Sentry Key Immobilizer System Initialization in this section.

REMOVAL AND INSTALLATION (Continued)

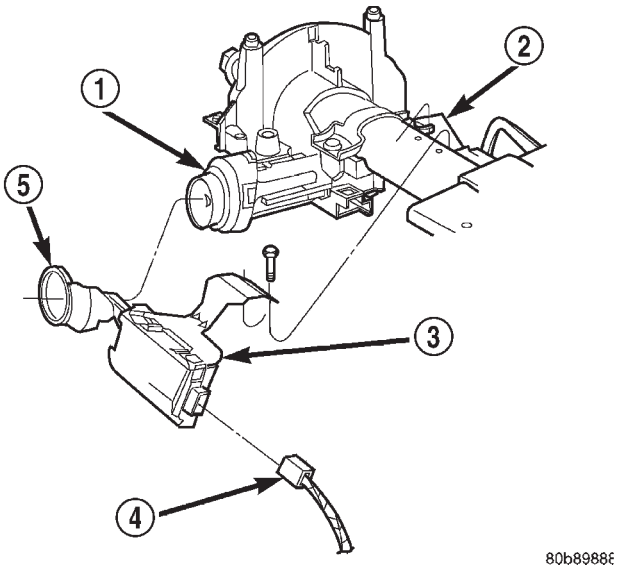

Fig. 10 Sentry Key Immobilizer Module (SKIM) Remove/Install

1 – IGNITION KEY CYLINDER
2 – STEERING COLUMN
3 – SENTRY KEY IMMOBILIZER MODULE (SKIM)
4 – SKIM CONNECTOR
5 – SKIM ANTENNA

(1) Rotate the SKIM and its mounting bracket to the side towards the steering column to slide the SKIM antenna ring around the ignition switch lock cylinder housing and then downwards (Fig. 10).

(2) Install the two screws securing the SKIM module to the top of the steering column (Fig. 10).

(3) Connect the steering column wire harness connector to the Sentry Key Immobilizer Module (SKIM) (Fig. 10).

(4) Install the steering column upper and lower shrouds. Refer to Instrument Panel Systems, Steering Column Shroud Removal and Installation.

(5) Connect the battery negative cable (Fig. 3).

(6) Close hood.

(7) Verify vehicle and system operation.

VEHICLE THEFT/SECURITY SYSTEM

TABLE OF CONTENTS

page

DESCRIPTION AND OPERATION
VEHICLE THEFT SECURITY SYSTEM 1
VTSS MODES OF OPERATION 1
ARMING THE VTSS 2
DISARMING VTSS 2
DISARMING INTRUSION SENSOR 2
TRIGGERING THE VTSS 2
VTSS TAMPER ALERT FEATURE 2
SENTRY KEY IMMOBILIZER SYSTEM (SKIS) . . . 2
SENTRY KEY IMMOBILIZER MODULE (SKIM) 3
SENTRY KEY IMMOBILIZER SYSTEM TRANSPONDER 4
SENTRY KEY IMMOBILIZER SYSTEM INDICATOR LAMP 4
VTSS OPERATING FREQUENCIES 5
VTSS SIREN 5
INTRUSION SENSOR 5

DIAGNOSIS AND TESTING
SENTRY KEY IMMOBILIZER SYSTEM 5
VEHICLE THEFT/SECURITY SYSTEM (VTSS) . . . 6

SERVICE PROCEDURES
SENTRY KEY IMMOBILIZER SYSTEM INITIALIZATION 6
SENTRY KEY IMMOBILIZER SYSTEM TRANSPONDER PROGRAMMING 7
SWITCHING OPERATING MODES/ CONFIGURING A NEW MODULE 8

REMOVAL AND INSTALLATION
SIREN 8
DOME LAMP - INTRUSION SENSOR 9

DESCRIPTION AND OPERATION

VEHICLE THEFT SECURITY SYSTEM

DESCRIPTION

Some vehicles are equipped with a premium vehicle theft security system. The Premium Vehicle Theft Security System (VTSS) is designed to protect against whole vehicle theft and the loss of its contents. This system monitors vehicle doors, hood, trunk and ignition key cylinders for unauthorized operation, as well as monitoring any movement inside the cabin when the intrusion sensor is armed.

Some vehicles are equipped with a standard vehicle theft security system. This system is designed to protect against whole vehicle theft. This system monitors the vehicle doors, hood, trunk and ignition key cylinders for unauthorized operation.

OPERATION

In the event the Premium VTS system is triggered the VTSS siren will sound. No exterior lights will flash on the premium security system.

In the event the Standard VTS system is triggered the VTSS will sound the vehicle horn and flash the headlamp and parklamps in a alternating fashion.

VTSS MODES OF OPERATION

The VTSS (ARKEM on PT) Module has three modes of operation including customer usage mode, dealer lot storage mode, and shipping mode. **Customer usage mode** provides full functionality of the module and is the mode in which the ARKEM Module should be operating when used by the customer. **Dealer lot storage mode** and shipping mode are reduced power modes meant to extend vehicle battery life during shipping and storage in the dealer lot. Dealer lot storage mode provides limited VTSS and power door lock functions, and disables the Remote Keyless Entry functions. This mode is intended to be used when the vehicle is on the dealer lot to provide VTSS coverage of the vehicle while minimizing battery drain. **Shipping mode** disables all normal functions of the module with the exception of communications over the vehicle's PCI bus, and is intended to be used when the vehicle is shipped from the assembly plant. The dealer must remove the module from shipping mode and place it into either the dealer lot storage or customer usage modes of operation.

DESCRIPTION AND OPERATION (Continued)

NOTE: The dealer must remove the module from "Ship Mode" and place the ARKEM Module into either the "Dealer Lot" storage or "Customer Usage" modes of operation after receiving the vehicle from the assembly plant. Refer to Switching Operating Modes/Configuring a New Module under Service Procedures in this section.

ARMING THE VTSS

In the customer usage mode of operation, the system can be armed by:

- Pressing the "LOCK" button on the Remote Keyless Entry (ARKEM) transmitter.
- Locking the doors using the power door lock switches.
- Locking the doors using the key cylinders (Premium system only).

After the vehicle is locked and the last door is closed, the circular red VTSS indicator in the instrument cluster will flash quickly for 16 seconds, indicating that arming is in progress. If no monitored systems are activated during this period (excluding the hood and trunk key cylinder), the system will arm. After 16 seconds, the LED will continue to flash at a slower rate indicating the system is armed.

If the hood ajar switch and/or trunk key cylinder switch(s) are not sensed by the system, the indicator LED will remain lit during the arming process, although the system will still arm. If the VTSS indicator does not illuminate at all upon door closing it indicates that the system is not arming.

The VTSS will not arm by mechanically locking the vehicle doors. This will manually override the system.

DISARMING VTSS

In the customer usage mode of operation, the system can be disarmed by:

- Pressing "UNLOCK" button on Remote Keyless Entry (RKE) transmitter.
- Inserting **valid** skim key in the ignition lock cylinder and turning to the "ON" position.
- Unlocking either door via the key cylinders (**Except Premium System**).

Any of the above actions will also halt the alarm once it has been activated.

DISARMING INTRUSION SENSOR

In the customer usage mode of operation, the intrusion sensor can be disarmed by:

- Pressing "LOCK" button on Remote Keyless Entry transmitter THREE times within FIVE seconds. This operation must be performed during the first 16 seconds of VTSS system arming.
- Rotating the drivers door key cylinder THREE times within FIVE seconds. This operation must be performed during the first 16 seconds of VTSS system arming.

TRIGGERING THE VTSS

After the VTSS is armed, any of the following will trigger the system:

- Opening any door.
- Opening the hood.
- Opening the liftgate.
- Turning the ignition to the RUN/START position with an **invalid** Sentry Key.
- Movement inside the vehicle interior with the intrusion sensor armed (Premium System Only).

VTSS TAMPER ALERT FEATURE

The vehicle theft security system contains a built-in tamper alert feature. This feature is designed to notify the driver that the system had been activated during its armed state. When the vehicle is disarmed, 3 horn pulses will be followed by the initial disarming pulse letting the driver know the system had been activated.

SENTRY KEY IMMOBILIZER SYSTEM (SKIS)

The Sentry Key Immobilizer System (SKIS) is designed to provide passive protection against unauthorized vehicle use by preventing the engine from operating while the system is armed. The primary components of this system are the Sentry Key Immobilizer Module (SKIM), the Sentry Key transponder, the Vehicle Theft/Security System (VTSS) indicator LED, and the Powertrain Control Module (PCM).

The SKIM is installed on the steering column near the ignition lock cylinder. The transponder is located under the molded rubber cap on the head of the ignition key. The VTSS indicator LED is located in the instrument cluster.

The SKIS includes three valid Sentry Key transponders from the factory, one being a valet key. This is so the customer can self program new keys if one is lost. If the customer wishes, additional non-coded blank Sentry Keys are available. These blank keys can be cut to match a valid ignition key, but the engine will not start unless the key transponder is also programmed to the vehicle. The SKIS will recognize no more than eight valid Sentry Key transponders at any one time.

The SKIS performs a self-test each time the ignition switch is turned to the ON position, and will store Diagnostic Trouble Codes (DTC's) if a system malfunction is detected. The SKIS can be diagnosed, and any stored DTC can be retrieved using a DRB lll® scan tool as described in the proper Body Diagnostic Procedures Manual.

DESCRIPTION AND OPERATION (Continued)

SENTRY KEY IMMOBILIZER MODULE (SKIM)

The Sentry Key Immobilizer Module (SKIM) (Fig. 1) contains a Radio Frequency (RF) transceiver and a central processing unit, which includes the Sentry Key Immobilizer System (SKIS) program logic. The SKIS programming enables the SKIM to program and retain in memory the codes of at least two, but no more than eight electronically coded Sentry Key transponders. The SKIS programming also enables the SKIM to communicate over the Programmable Communication Interface (PCI) bus network with the Powertrain Control Module (PCM), the instrument cluster and/or the DRB lll® scan tool.

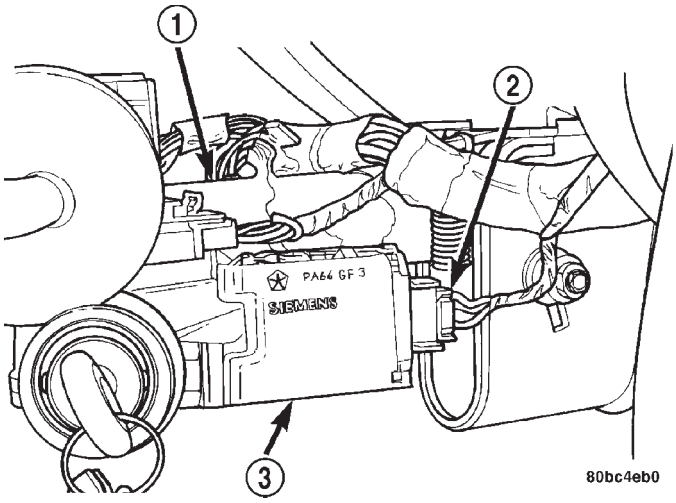

Fig. 1 Sentry Key Immobilizer Module (SKIM) Location

1 – STEERING COLUMN
2 – SKIM ELECTRICAL CONNECTOR
3 – SKIM

The SKIM transmits and receives RF signals through a tuned antenna enclosed within a molded plastic ring formation that is integral to the SKIM housing. When the SKIM is properly installed on the steering column, the antenna ring is oriented around the circumference of the ignition lock cylinder housing (Fig. 1). This antenna ring must be located within eight millimeters (0.31 inches) of the Sentry Key in order to ensure proper RF communication between the SKIM and the Sentry Key transponder.

For added system security, each SKIM is programmed with a unique “Secret Key” code and a security code. The SKIM keeps the “Secret Key” code in memory and sends the code over the CCD data bus to the PCM, which also keeps this code in its memory. The SKIM also sends the “Secret Key” code to each of the programmed Smart Key transponders. The security code is used by the assembly plant to access the SKIS for initialization, or by the dealer technician to access the system for service. The SKIM also stores in its memory the Vehicle Identification Number (VIN), which it learns through a PCI bus message from the PCM during initialization.

The SKIM and the PCM both use software that includes a rolling code algorithm strategy, which helps to reduce the possibility of unauthorized SKIS disarming. The rolling code algorithm ensures security by preventing an override of the SKIS through the unauthorized substitution of the SKIM or the PCM. However, the use of this strategy also means that replacement of either the SKIM or the PCM units will require a system initialization procedure to restore system operation.

When the ignition switch is turned to the ON or START positions, the SKIM transmits an RF signal to excite the Sentry Key transponder. The SKIM then listens for a return RF signal from the transponder of the Sentry Key that is inserted in the ignition lock cylinder. If the SKIM receives an RF signal with valid “Secret Key” and transponder identification codes, the SKIM then sends a “valid key” message to the PCM over the PCI bus. If the SKIM receives an invalid RF signal or no response, it sends “invalid key” messages to the PCM. The PCM will enable or disable engine operation based upon the status of the SKIM messages.

The SKIM also sends messages to the instrument cluster over the PCI bus network to control the VTSS indicator LED. The SKIM sends messages to the instrument cluster to turn the LED on for about three seconds when the ignition switch is turned to the ON position as a bulb test. After completion of the bulb test, the SKIM sends bus messages to keep the LED off for a duration of about one second. Then the SKIM sends messages to turn the LED on or off based upon the results of the SKIS self-tests. If the VTSS indicator LED comes on and stays on after the bulb test, it indicates that the SKIM has detected a system malfunction and/or that the SKIS has become inoperative.

If the SKIM detects an invalid key when the ignition switch is turned to the ON position, it sends messages to the instrument cluster to flash the VTSS indicator LED. The SKIM can also send messages to the instrument cluster to flash the LED and to generate a single audible chime tone. These functions serve as an indication to the customer that the SKIS has been placed in its “Customer Learn” programming mode. See Sentry Key Immobilizer System Transponder Programming in this group for more information on the “Customer Learn” programming mode.

For diagnosis or initialization of the SKIM and the PCM, a DRB lll® scan tool and the proper Body Diagnostic Procedures Manual are required. The SKIM

cannot be repaired, and if faulty or damaged, the unit must be replaced.

SENTRY KEY IMMOBILIZER SYSTEM TRANSPONDER

The Sentry Key Immobilizer System (SKIS) uses a transponder that is integral to each of three ignition key that are supplied with the vehicle when it is shipped from the factory. The transponder chip is insulated within a nylon mount inserted in the head of the key, and invisible beneath a molded rubber cap (Fig. 2).

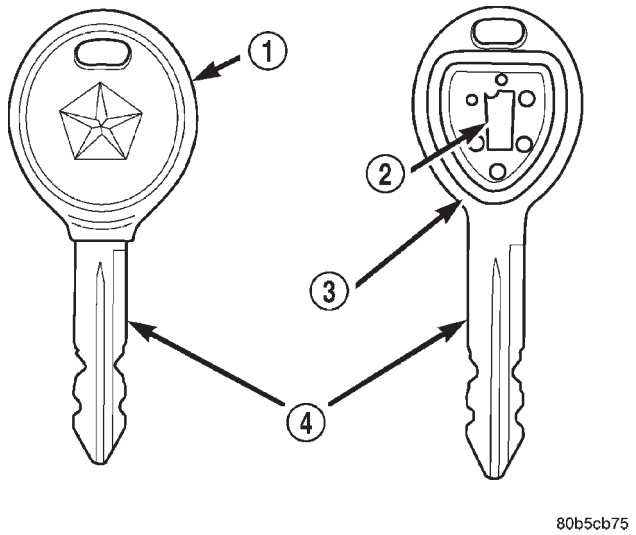

Fig. 2 Sentry Key Immobilizer Transponder

1 – MOLDED CAP
2 – TRANSPONDER
3 – MOLDED CAP REMOVED
4 – SENTRY KEY

Each Sentry Key transponder has a unique transponder identification code programmed into it by the manufacturer. The Sentry Key Immobilizer Module (SKIM) has a unique “Secret Key” code programmed into it by the manufacturer. When a Sentry Key transponder is programmed into the memory of the SKIM, the SKIM learns the transponder identification code from the transponder, and the transponder learns the “Secret Key” code from the SKIM. Each of these codes is stored within the transponder and in the nonvolatile memory of the SKIM. Therefore, blank keys for the SKIS must be programmed by and into the SKIM, in addition to being cut to match the mechanical coding of the ignition lock cylinder. See Sentry Key Immobilizer System Transponder Programming in this group for more information.

The Sentry Key transponder is within the range of the SKIM transceiver antenna ring when it is inserted in the ignition lock cylinder. When the ignition switch is turned to the START or RUN positions, the SKIM transceiver issues a Radio Frequency (RF) signal that excites the transponder chip. The transponder chip responds by issuing an RF signal containing its transponder identification code and the “Secret Key” code. The SKIM transceiver compares the transponder codes with the codes stored in its memory to determine whether a valid key is in the ignition lock cylinder.

The Sentry Key transponder cannot be repaired and, if faulty or damaged, it must be replaced.

SENTRY KEY IMMOBILIZER SYSTEM INDICATOR LAMP

The Sentry Key Immobilizer System (SKIS) uses the Vehicle Theft Security System (VTSS) indicator LED to give an indication when the SKIS is faulty or when the vehicle has been immobilized due to the use of an invalid ignition key. The LED is controlled by the instrument cluster circuitry based upon messages received from the Sentry Key Immobilizer Module (SKIM) through the Body Control Module (BCM) on the Programmable Communication Interface (PCI) bus.

The SKIM sends messages to the instrument cluster, via the BCM, to turn the LED on for about three seconds when the ignition switch is turned to the ON position as a bulb test. After completion of the bulb test, the SKIM sends PCI bus messages to keep the LED off for a duration of about one second. Then the SKIM sends messages to the instrument cluster circuitry to turn the LED on or off based upon the results of the SKIS self-tests. If the VTSS indicator LED comes on and stays on after the bulb test, it indicates that the SKIM has detected a system malfunction and/or that the SKIS has become inoperative. If the SKIM detects an invalid key when the ignition switch is turned to the ON position, it sends messages to the instrument cluster to flash the VTSS indicator LED.

The SKIM can also send messages to the instrument cluster to flash the LED and to generate a single audible chime tone. These functions serve as an indication to the customer that the SKIS has been placed in its “Customer Learn” programming mode. See Sentry Key Immobilizer System Transponder Programming in this group for more information on the “Customer Learn” programming mode.

The VTSS indicator LED uses a replaceable Light Emitting Diode (LED) on the instrument cluster electronic circuit board. Refer to Group 8E - Instrument Panel Systems for Cluster Lamp Removal and Installation. If the VTSS indicator LED comes on and stays on after the bulb test function, diagnosis of the SKIS should be performed with a DRB lll® scan tool and the proper Body Diagnostic Procedures Manual.

DESCRIPTION AND OPERATION (Continued)

VTSS OPERATING FREQUENCIES

The VTSS (RKE) system receives signals from the hand-held keyfob or transmitter. European market vehicles use 433 MHz. Japan market vehicles use 268 MHz.

VTSS SIREN

DESCRIPTION

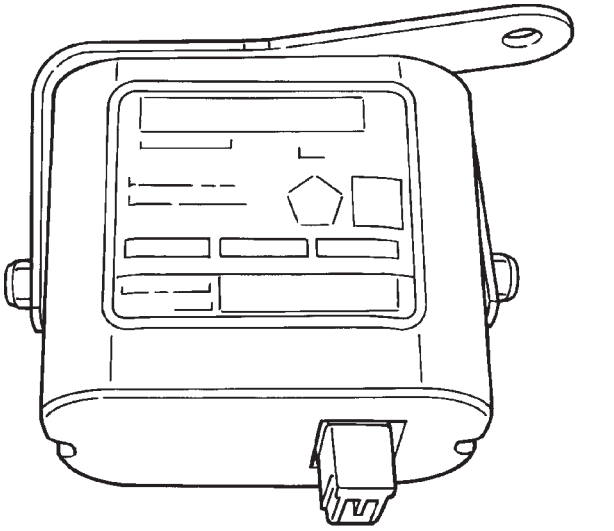

Fig. 3 PT VTSS Siren

Some vehicles equipped with the premium vehicle theft security system (VTSS) utilize a separate siren. This siren is dedicated to the theft security system (VTSS) and is controlled by the ARKEM module (Remote Keyless Entry). The siren can reach sound decibels as high as 110 dB. A internal battery-backup power source and auto detect feature are also built into the siren. The internal battery-backup provides sufficient power to sound the alarm even if the vehicle's electrical system is depleted. The auto detect feature has the ability to sound the siren if any of the wires (voltage supply, ground and signal) leading to the siren are cut while the system is armed.

OPERATION

In the event the vehicle theft security is triggered, the ARKEM module will sound the siren. Refer to ARKEM module description and operation in the Power Door Locks section of the service manual for detailed information.

INTRUSION SENSOR

DESCRIPTION

Some vehicles equipped with the premium vehicle theft security system (VTSS) use a ultrasonic intrusion sensor. This intrusion sensor is integrated into the dome lamp (Fig. 4) and detects any movement in the cabin when the VTSS system and the intrusion sensor are armed. The sensor cannot be serviced separately and if found to be faulty the entire dome lamp assembly must be replaced.

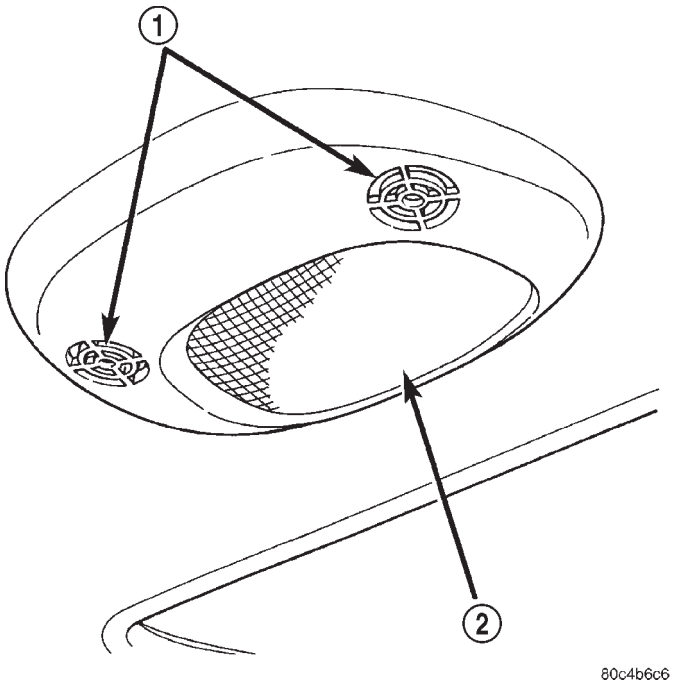

Fig. 4 PT VTSS Intrusion Sensor

1 – INTRUSION SENSORS
2 – DOME LAMP

OPERATION

In the event the intrusion sensor detects movement inside the vehicle's interior (with system armed), the ARKEM module will sound the siren. Refer to ARKEM module description and operation in the Power Door Locks section of the service manual for detailed information.

DIAGNOSIS AND TESTING

SENTRY KEY IMMOBILIZER SYSTEM

WARNING: ON VEHICLES EQUIPPED WITH AIRBAGS, REFER TO GROUP 8M - PASSIVE RESTRAINT SYSTEMS BEFORE ATTEMPTING ANY STEERING WHEEL, STEERING COLUMN, OR INSTRUMENT PANEL COMPONENT DIAGNOSIS OR SERVICE. FAILURE TO TAKE THE PROPER PRECAUTIONS COULD RESULT IN ACCIDENTAL AIRBAG DEPLOYMENT AND POSSIBLE PERSONAL INJURY.

DIAGNOSIS AND TESTING (Continued)

NOTE: The following tests may not prove conclusive in the diagnosis of this system. The most reliable, efficient, and accurate means to diagnose the Sentry Key Immobilizer System (SKIS) involves the use of a DRB lll® scan tool and the proper Body Diagnostic Procedures Manual.

The Sentry Key Immobilizer System (SKIS) and the Programmable Communication Interface (PCI) bus network should be diagnosed using a DRB lll® scan tool. The DRB lll® will allow confirmation that the PCI bus is functional, that the Sentry Key Immobilizer Module (SKIM) is placing the proper messages on the PCI bus, and that the Powertrain Control Module (PCM) and the instrument cluster are receiving the PCI bus messages. Refer to the proper Body Diagnostic Procedures Manual. Refer to Group 8W-Wiring Diagrams for complete circuit descriptions and diagrams.

(1) Check the fuses in the fuse block. If OK, go to Step 2. If not OK, repair the shorted circuit or component as required and replace the faulty fuse.

(2) Disconnect and isolate the battery negative cable (Fig. 5). Unplug the wire harness connector at the SKIM. Check for continuity between the ground circuit cavity of the SKIM wire harness connector and a good ground. There should be continuity. If OK, go to Step 3. If not OK, repair the open circuit to ground as required.

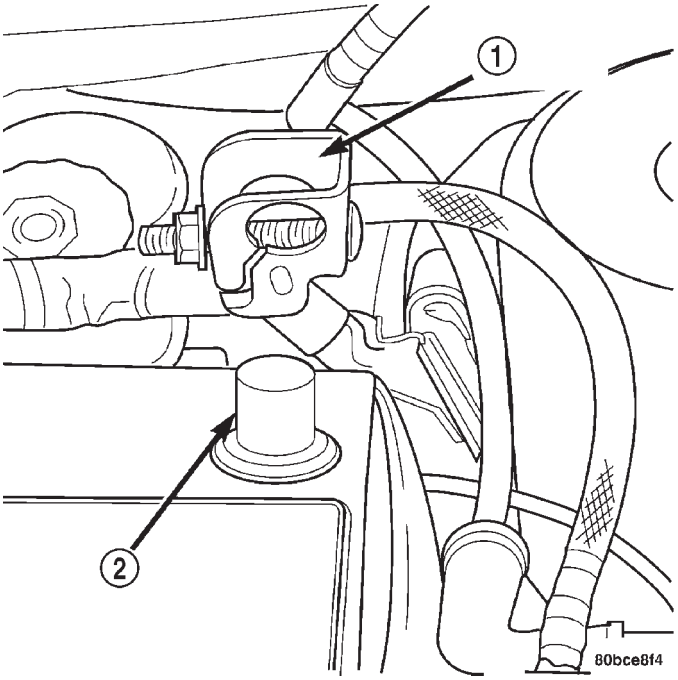

Fig. 5 Battery Negative Cable Remove/Install

1 – NEGATIVE CABLE
2 – NEGATIVE BATTERY POST

(3) Connect the battery negative cable. Check for battery voltage at the fused B(+) circuit cavity of the SKIM wire harness connector. If OK, go to Step 4. If not OK, repair the open circuit to the fuse in the fuse block as required.

(4) Turn the ignition switch to the ON position. Check for battery voltage at the fused ignition switch output (run/start) circuit cavity of the SKIM wire harness connector. If OK, use a DRB lll® scan tool and the proper Body Diagnostic Procedures Manual to complete the diagnosis of the SKIS. If not OK, repair the open circuit to the fuse in the fuse block as required.

VEHICLE THEFT/SECURITY SYSTEM (VTSS)

To diagnose the Vehicle Theft/Security Sytem (VTSS), use a DRB 111® scan tool and the proper Body Diagnostic Procedures Manual.

SERVICE PROCEDURES

SENTRY KEY IMMOBILIZER SYSTEM INITIALIZATION

The Sentry Key Immobilizer System (SKIS) initialization should be performed following a Sentry Key Immobilizer Module (SKIM) replacement.

It can be summarized by the following:

(1) Obtain the vehicles unique PIN number assigned to it's original SKIM from the vehicle owner, the vehicle's invoice or from Chrysler's Customer Center.

(2) With the DRB lll® scan tool, select "Theft Alarm," "SKIM," Miscellaneous." Select "SKIM Module Replaced" function and the DRB lll® will prompt you through the following steps.

(3) Enter secured access mode using the unique four digit PIN number.

(4) Program the vehicle's VIN number into the SKIM's memory.

(5) Program the country code into the SKIM's memory (U.S.).

(6) Transfer the vehicle's unique Secret Key data from the PCM. This process will require the SKIM to be in **secured access mode**. The PIN number must be entered into the DRB lll® before the SKIM will enter **secured access mode**. Once **secured access mode** is active, the SKIM will remain in that mode for 60 seconds.

(7) Program all customer keys into the SKIM's memory. This required that the SKIM be in **secured access mode** The SKIM will immediately exit **secured access mode** after each key is programmed.

SERVICE PROCEDURES (Continued)

NOTE: If a PCM is replaced, the unique "Secret Key" data must be transferred from the SKIM to the PCM. This procedure requires the SKIM to be placed in SECURED ACCESS MODE using the four digit PIN code.

SENTRY KEY IMMOBILIZER SYSTEM TRANSPONDER PROGRAMMING

Two programmed Sentry Key transponders are included with the Sentry Key Immobilizer System (SKIS) when it is shipped from the factory. The Sentry Key Immobilizer Module (SKIM) can be programmed to recognize up to six additional transponders, for a total of eight Sentry Keys. The following "Customer Learn" programming procedure for the programming of additional transponders requires access to at least two of the valid Sentry Keys. If two valid Sentry Keys are not available, Sentry Key programming will require the use of a DRB lll® scan tool.

CUSTOMER LEARN PROGRAMMING

(1) Obtain the additional Sentry Key transponder blank(s) that are to be programmed for the vehicle. Cut the additional Sentry Key transponder blanks to match the ignition lock cylinder mechanical key codes.

(2) Insert one of the two valid Sentry Key transponders into the ignition switch and turn the ignition switch to the ON position.

(3) After the ignition switch has been in the ON position for about three seconds, but no more than fifteen seconds, cycle the ignition switch back to the OFF position. Replace the first valid Sentry Key in the ignition lock cylinder with the second valid Sentry Key and turn the ignition switch back to the ON position. Both operations must be performed within 15 seconds.

(4) About ten seconds after the completion of Step 3, the VTSS indicator LED will start to flash and a single audible chime tone will sound to indicate that the system has entered the "Customer Learn" programming mode.

(5) Within about fifty seconds of entering the "Customer Learn" programming mode, turn the ignition switch to the OFF position, replace the valid Sentry Key with a blank Sentry Key transponder, and turn the ignition switch back to the ON position.

(6) About ten seconds after the completion of Step 5, a single audible chime tone will sound and the VTSS indicator LED will stop flashing and stay on solid for about three seconds and then turn OFF to indicate that the blank Sentry Key transponder has been successfully programmed. The SKIS will immediately return to normal system operation following exit from the "Customer Learn" programming mode.

(7) Go back to Step 2 and repeat this process for each additional Sentry Key transponder blank to be programmed.

If any of the above steps is not completed in the proper sequence, or within the allotted time, the SKIS will automatically exit the "Customer Learn" programming mode. The SKIS will also automatically exit the "Customer Learn" programming mode if it sees a non-blank Sentry Key transponder when it should see a blank, if it has already programmed eight valid Sentry Keys, or if the ignition switch is turned to the OFF position for more than about fifty seconds.

NOTE: While in Customer Learn mode (LED flashing), the engine will not START and RUN.

PROGRAMMING BLANK SENTRY KEY TRANSPONDERS WITH A DRB III® SCAN TOOL

When programming a blank Sentry Key transponder, the key blank must first be cut to match the ignition lock cylinder. It will also be necessary to enter the vehicle's four digit PIN code into the DRB lll® scan tool to enter the Sentry Key Immobilizer Module's (SKIM's) secured access mode.

NOTE: Once a Sentry Key is programmed to a particular vehicle, it cannot be transferred to another vehicle.

Insert the blank key into the ignition and turn it to the RUN position. Using the DRB lll® scan tool, select "Theft Alarm," then "SKIM," then "Miscellaneous." Select "Program New Key." Enter the four digit PIN code using the DRB lll®. When programming is completed, the SKIM will exit secured access mode and the DRB lll® will display the status of the key. One of five different status messages may be displayed as follows:

- "Programming Successful" is displayed if SKIM Sentry Key programming succeeds.
- "Learned Key in Ignition" is displayed if the key in the ignition has already been programmed into that vehicle's SKIM.
- "8 Keys Already Learned (At The Maximum) Programming Not Done" is displayed if eight keys have already been programmed into the SKIM. In this case, if a new key needs to be added due to a lost or defective key, the "Erase All Keys" function (requires entering secured access mode) has to be performed. Then the customer's seven keys plus the new key MUST be reprogrammed into the SKIM.
- "Programming Not Attempted" is displayed after an "Erase All Keys" function is executed.

SERVICE PROCEDURES (Continued)

- "Programming Key Failed" is displayed if further diagnosis is required.
- To learn additional keys, turn the ignition OFF, remove the learned key, and insert the next new blank key. Turn ignition to the RUN position and re-enter the secured access mode function and repeat the "Program New Key" procedure outlined above.

SWITCHING OPERATING MODES/ CONFIGURING A NEW MODULE

To switch operating modes or to configure a new module, a DRB lll® scan tool must be used.

(1) Hook up the DRB lll® scan tool to the Data Link Connector (DLC) (Fig. 6).

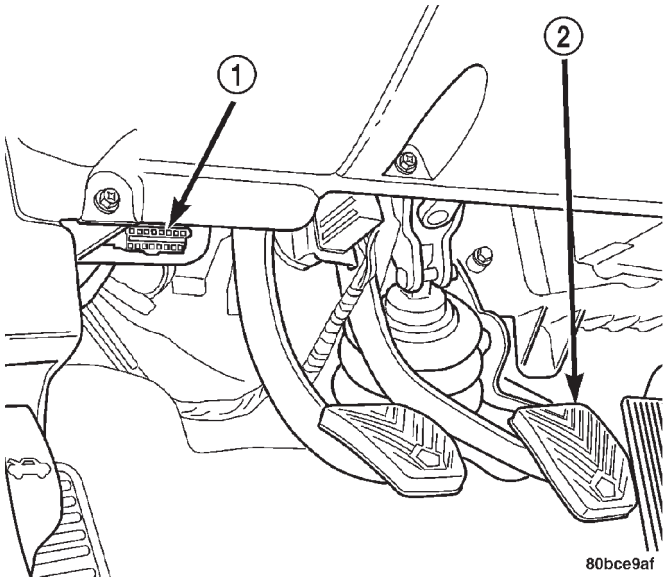

Fig. 6 Data Link Connector (DLC) Location

1 – DATA LINK CONNECTOR (DLC)
2 – BRAKE PEDAL

(2) With the key in the ignition, turn the key to the RUN position.

(3) After the DRB lll® scan tool initialization, perform the following:

(a) Select "Theft Alarm."
(b) Select "VTSS."
(c) Select "Miscellaneous."

(4) Once in the "Miscellaneous" screen:

(a) If you wish to configure a new module, select "Configure Module."
(b) If you wish to put the module into customer usage mode, select "Enable VTSS."
(c) If you wish to put the module into dealer lot mode, select "Dealer Lot."

REMOVAL AND INSTALLATION

SIREN

REMOVAL

(1) Disconnect and isolate the negative battery cable.

(2) Remove the left front wheel well splash shield. Refer to Body for the procedure.

(3) Remove the air blocker to see siren (Fig. 7).

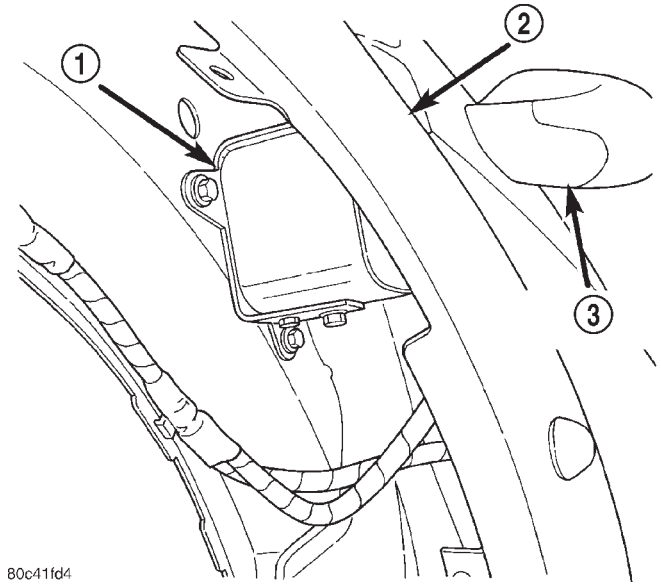

Fig. 7 Siren Location

1 – SIREN
2 – LEFT FRONT FENDER
3 – LEFT DOOR MIRROR

(4) Disconnect the siren electrical connector (Fig. 7).

(5) Remove the siren retaining screws and remove the siren from the vehicle.

INSTALLATION

(1) Position siren and install retaining screws.
(2) Connect the siren electrical connector.
(3) Install air blocker in original position.
(4) Install the left front wheel well splash shield. Refer to Body for the procedure.
(5) Connect the negative battery cable.

REMOVAL AND INSTALLATION (Continued)

DOME LAMP - INTRUSION SENSOR

REMOVAL

(1) Disconnect and isolate the negative battery cable.

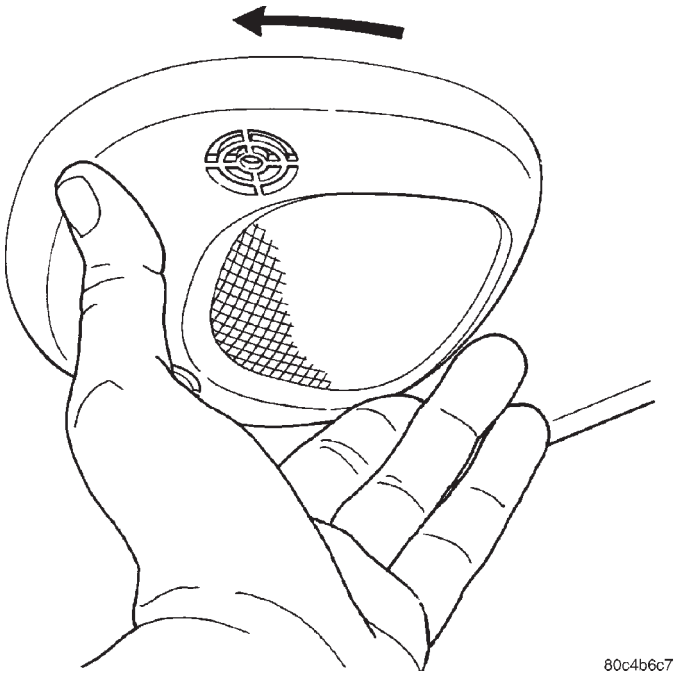

Fig. 8 Removing Dome Lamp / Intrusion Sensor

(2) Grasp the dome lamp / intrusion sensor and rotate to line-up with headliner cut-out pattern (Fig. 9).

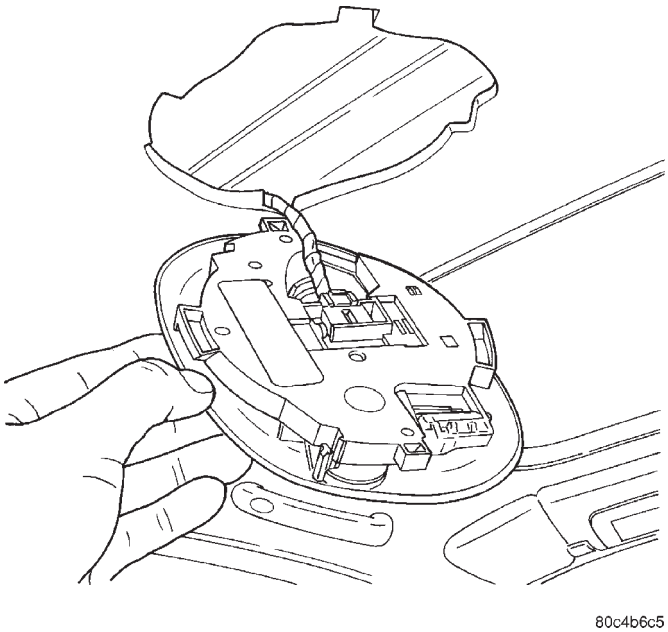

Fig. 9

(3) Disconnect dome lamp / intrusion sensor electrical connector.

(4) Remove the lamp / intrusion sensor from the vehicle.

INSTALLATION

(1) Connect dome lamp / intrusion sensor electrical connector.

(2) Install dome lamp / intrusion sensor in headliner.

(3) Connect the negative battery cable.

2001 PT CRUISER

POWER SEAT SYSTEMS

TABLE OF CONTENTS

page

DESCRIPTION AND OPERATION
POWER SEAT SYSTEM 1
DIAGNOSIS AND TESTING
DIAGNOSTIC PROCEDURE. 1

page

REMOVAL AND INSTALLATION
FRONT SEAT ASSEMBLY 1
POWER FRONT SEAT ADJUSTER 1
POWER FRONT SEAT SWITCH 2

DESCRIPTION AND OPERATION

POWER SEAT SYSTEM

DESCRIPTION

The power seat can be adjusted in two (2) different directions, riser up and riser down.

OPERATION

One single armature permanent magnet reversible motor is coupled to a worm gear box assembly. It is located in between the seat tracks and upper supports. The one single gear motor assembly attaches to the seat tracks and provide the various seat movements.

The electrical circuit is protected by a 20 amp circuit breaker located in the fuse block.

DIAGNOSIS AND TESTING

DIAGNOSTIC PROCEDURE

Before any testing is attempted the battery should be carefully charged and all connections and terminals cleaned and tightened to insure proper continuity and grounds.

With dome lamp on, apply switch in direction of failure. If dome lamp dims the seat motor is trying to work indicating mechanical jamming. If dome lamp does not dim, then proceed with the following electrical tests.

CIRCUIT BREAKER

Find the correct circuit breaker in the fuse block. Pull out slightly but be sure that circuit breaker terminals still contact terminals in fuse block. Connect ground wire of voltmeter to a good ground. With probe of voltmeter positive wire, check both terminals of circuit breaker for battery voltage. If only one terminal checks at battery voltage, circuit breaker is defective and must be replaced. If neither terminal shows battery voltage, check for open or shorted circuit to circuit breaker.

SEAT MOTOR

(1) Remove power seat switch from seat. Refer to Removal and Installation, Seat Switch in this section.

(2) Disconnect wire harness connector.

(3) At the seat switch harness connector, check pin A for battery voltage and pin B for ground.

(4) To test the seat motors, refer to the Wiring Diagrams for connector pin-outs and verify proper seat responses. Using two jumper wires, connect one to a 12 volt battery supply and the second to a ground. Connect the other ends to the seat motor wire harness connector. Refer to Wiring Diagrams for proper pin locations.

SEAT SWITCH

(1) Remove switch from mounting position.

(2) Using an ohmmeter, test the continuity of the switch. Refer to Wiring Diagrams for pin locations. If there is no continuity at any of the switch positions, replace switch.

REMOVAL AND INSTALLATION

FRONT SEAT ASSEMBLY

Refer to Body, Front Seat Removal and Installation.

POWER FRONT SEAT ADJUSTER

REMOVAL

(1) Open hood.

(2) Disconnect and isolate the battery negative cable (Fig. 1).

(3) Remove Front Seat assembly from vehicle. Refer to Body, Removal and Installation, Front Seat.

(4) Separate power seat switch and harness from seat adjuster.

(5) Remove four power seat adjuster mounting screws from cushion pan and remove from seat assembly.

REMOVAL AND INSTALLATION (Continued)

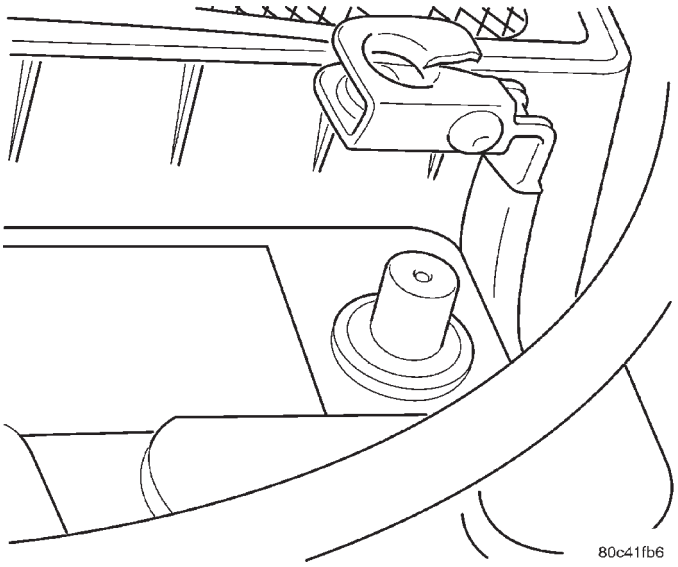

Fig. 1 Battery Negative Cable Remove/Install

INSTALLATION

(1) Install power seat adjuster and four power seat adjuster mounting screws to cushion pan.

(2) Route and install the power seat switch and harness to the seat adjuster.

(3) Install the front seat assembly. Refer to Body, Removal and Installation, Front Seat.

(4) Connect the battery negative cable (Fig. 1).

(5) Close hood.

(6) Verify vehicle and system operation.

POWER FRONT SEAT SWITCH

REMOVAL

(1) Open hood.

(2) Disconnect and isolate the battery negative cable (Fig. 1).

(3) Remove two screws to left cushion side shield.

(4) Disconnect wiring from switch.

(5) Remove attaching screws and switch from bezel.

INSTALLATION

(1) Install attaching switch and two attaching screws to bezel.

(2) Connect wiring from switch.

(3) Install screws to left cushion side shield.

(4) Connect the battery negative cable (Fig. 1).

(5) Close hood.

(6) Verify vehicle and system operation.

POWER WINDOW SYSTEMS

TABLE OF CONTENTS

	page
DESCRIPTION AND OPERATION	
POWER WINDOW SYSTEM	1
DIAGNOSIS AND TESTING	
CIRCUIT TEST	2
WINDOW SWITCH	2
WINDOW MOTOR	2
REMOVAL AND INSTALLATION	
WINDOW MOTOR	2
WINDOW SWITCH	3

DESCRIPTION AND OPERATION

POWER WINDOW SYSTEM

DESCRIPTION

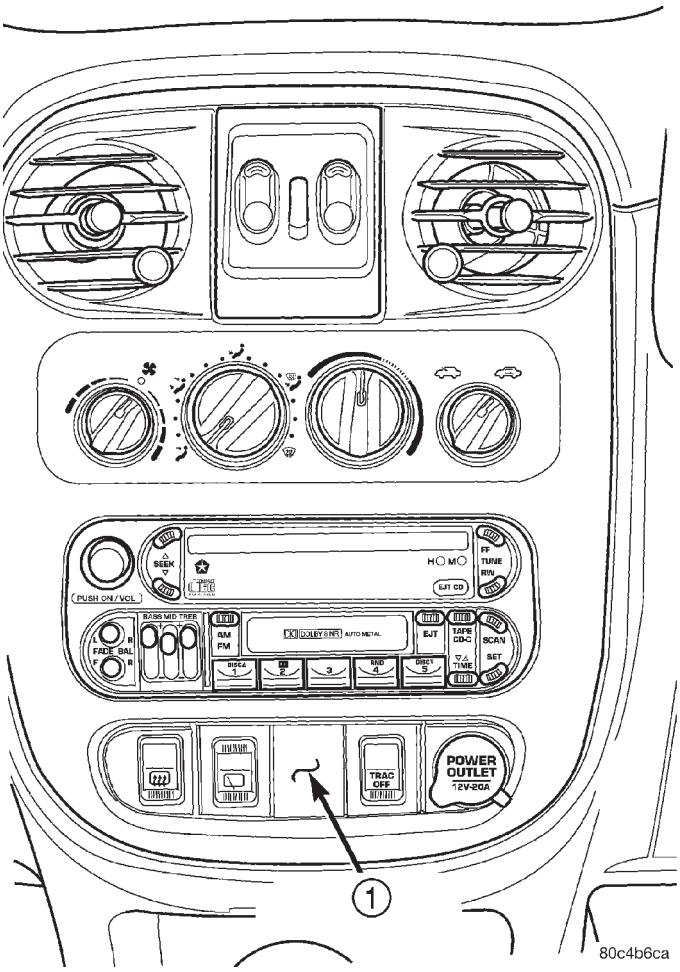

Fig. 1 Front Window Switch Location

1 – ACCESSORY SWITCH BEZEL

The power window system allows each of the door windows to be raised and lowered electrically by actuating a switch on the instrument panel (front windows) or center console (rear windows). The front window switch allows the front occupants to lock out the individual switches on the passenger and rear doors from operation. The power window system receives battery feed through a circuit breaker in the fuse block, only when the ignition switch is in the ON position.

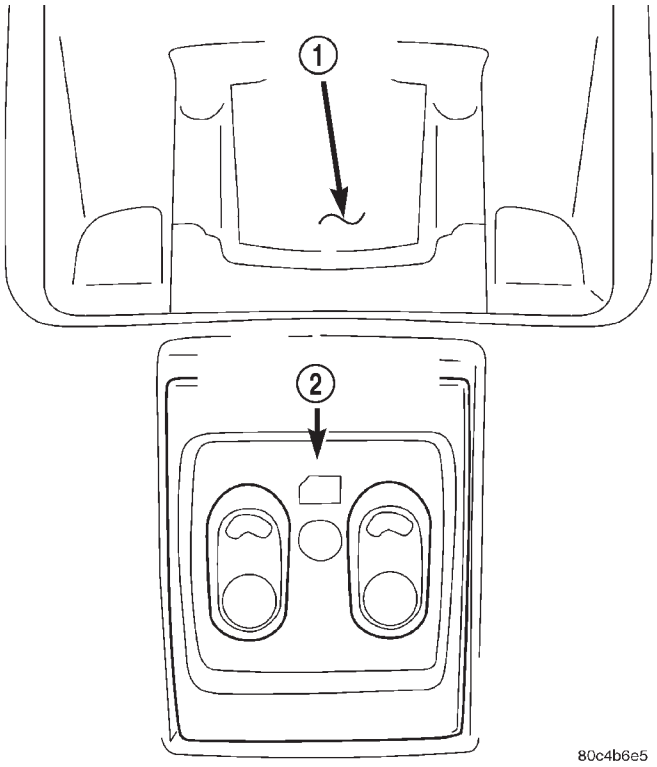

Fig. 2 Rear Window Switch Location

1 – REAR OF CENTER CONSOLE

2 – REAR POWER WINDOW SWITCH

The power window system includes the power window switches on the instrument panel (front windows) and center console (rear windows), the circuit breaker in the fuse block, and the power window motors inside each door. For service of the mechani-

DESCRIPTION AND OPERATION (Continued)

cal components, such as the regulator, lift plate, window tracks, or glass, refer to Group Body.

OPERATION

The front and rear door window lift motors are of the permanent magnet type. A battery positive and negative connection to either of the two motor terminals will cause the motor to rotate in one direction. Reversing current through these same two connections will cause the motor to rotate in the opposite direction.

Each individual motor is grounded through their respective switch.

DIAGNOSIS AND TESTING

CIRCUIT TEST

The following wiring test determines whether or not voltage is continuous through the body harness to the power window switches.

Remove the suspected switch for testing. Refer to Removal and Installation in this section. Connect a voltmeter positive lead to pin 4 and negative lead top pin 3 of the switch harness connector. Turn ignition switch to the ON position. Voltmeter should read battery voltage. If OK, go to Window Switch Diagnosis and Testing. If not OK, check the 30 amp circuit breaker in the fuse block or for a broken wire. Refer to Wiring Diagrams, for connector pin-outs and circuit descriptions.

WINDOW SWITCH

Remove the switch from its mounting. Refer to Removal and Installation in this section. Using an ohmmeter, test the window switch for continuity in all positions Refer to Power Window Switch Continuity table to determine if continuity is correct. If the results are not obtained, replace the switch.

POWER WINDOW SWITCH CONTINUITY

SWITCH POSITION	CONTINUITY BETWEEN
OFF	PIN 1 AND 4 PIN 2 AND 5 PIN 3 AND 8
UP	PIN 1 AND 4 PIN 1 AND 8 PIN 2 AND 5
DOWN	PIN 1 AND 4 PIN 1 AND 5 PIN 3 AND 8

WINDOW MOTOR

(1) Remove door trim panel. Refer to Group 23-Body, Front Door Trim Panel Removal and Installation.

(2) Connect positive (+) lead from a test battery to either of the two motor terminals.

(3) Connect negative (-) lead from test battery to remaining motor terminal.

(4) The motor should now rotate in one direction to either move window up or down.

(a) If window happens to already be in full UP position and motor is connected so as to move it in UP direction no movement will be observed.

(b) Likewise, motor connected to move window in DOWN direction no movement will be observed if window is already in full DOWN position.

(c) Reverse battery leads in Step 2 and Step 3 and window should now move. If window does not move, remove motor. Refer to Window Motor Removal and Installation in this section.

(5) If window moved completely up or down, the test leads should be reversed one more time to complete a full window travel inspection.

(6) If window does not move, check to make sure that it is free to move.

(7) It is necessary that the window be free to slide up and down in the glass channels. If the window is not free to move up and down, the window lift motor will not be able to move the glass.

(8) To determine if the glass is free, disconnect the regulator from the glass lift plate and slide the window up and down by hand.

REMOVAL AND INSTALLATION

WINDOW MOTOR

REMOVAL

(1) Move the window to the full-up position, if possible.

(2) Open hood

(3) Disconnect and isolate the battery negative cable (Fig. 3).

(4) Remove door trim panel. Refer to Body, Removal and Installation, Front Door Trim/Rear Door Trim.

(5) Disconnect electrical connector to window motor.

(6) Remove window regulator. Refer to Body, Removal and Installation, Front Door Window Regulator/Rear Door Window Regulator.

(7) With regulator on bench, remove three screws retaining the motor to the regulator and remove motor.

REMOVAL AND INSTALLATION (Continued)

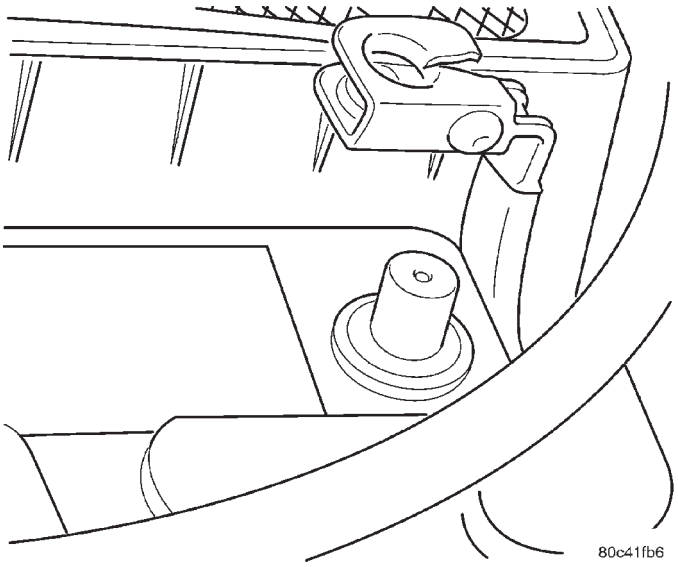

Fig. 3 Battery Negative Cable Remove/Install

INSTALLATION

(1) With regulator on bench, install three screws retaining the motor to the regulator.

(2) Install the window regulator. Refer to Body, Removal and Installation, Front Door Window Regulator/Rear Door Window Regulator.

(3) Connect electrical connector to window motor.

(4) Install door trim panel. Refer to Body, Removal and Installation, Front Door Trim/Rear Door Trim.

(5) Connect the battery negative cable (Fig. 3).

(6) Close hood

(7) Verify vehicle and system operation.

WINDOW SWITCH

REMOVAL

(1) Open hood.

(2) Disconnect and isolate the battery negative cable (Fig. 3).

(3) Using a trim stick (special tool #C-4755) or equivalent, gently pry out on the affected window switch (Fig. 4) or (Fig. 5) at the center of the bottom edge.

(4) Disconnect the switch electrical connector.

(5) Remove switch from vehicle.

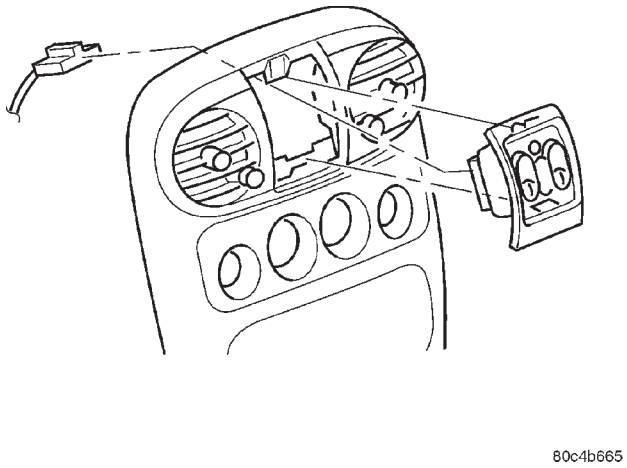

Fig. 4 Front Window Switch Remove Install

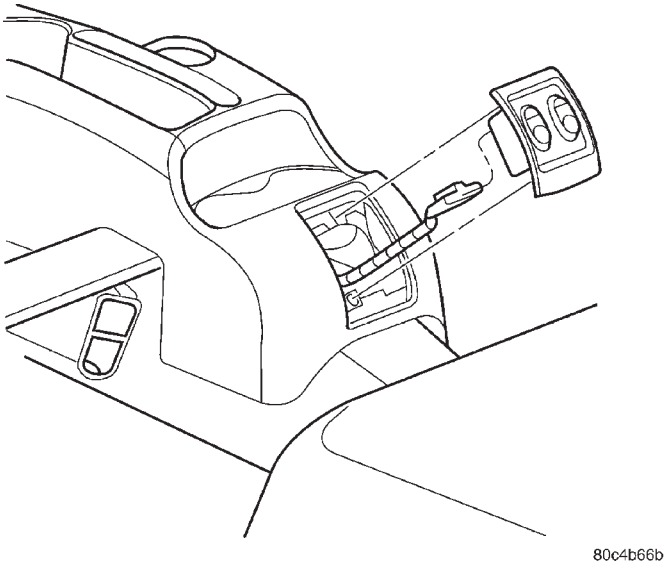

Fig. 5 Rear Window Switch Remove/Install

INSTALLATION

(1) Connect the switch electrical connector.

(2) Place the switch assembly into opening and firmly snap into place.

(3) Connect the battery negative cable (Fig. 3).

(4) Close hood.

(5) Verify vehicle and system operation.

POWER MIRROR SYSTEMS

TABLE OF CONTENTS

	page
DESCRIPTION AND OPERATION	
POWER MIRROR SYSTEM	1
DIAGNOSIS AND TESTING	
MIRROR SWITCH	2
MIRROR MOTOR	2
REMOVAL AND INSTALLATION	
INSIDE REAR VIEW MIRROR ASSEMBLY	3
MIRROR SWITCH	3
SIDE VIEW MIRROR ASSEMBLY	4

DESCRIPTION AND OPERATION

POWER MIRROR SYSTEM

DESCRIPTION

The mirrors are controlled by a single switch assembly located on the front left lower instrument panel. The push button rocker switch uses L (left) and R (right) for mirror selection and a button to push for the desired direction of mirror movement.

The motors which operate the mirrors are part of the mirror assembly and cannot be replaced separately.

The Ignition Off Draw fuse is included in the power mirror circuity and should be checked if the mirrors are inoperative.

OPERATION

Use the mirror select switch, located to the left of the steering column on the instrument panel, to adjust the view obtained in the outside mirrors. Press the L or R button for Left or Right mirror selection. Use the center off position to guard against accidentally moving a mirror position.

Select a mirror and press one of the four arrows for the direction you want the mirror to move.

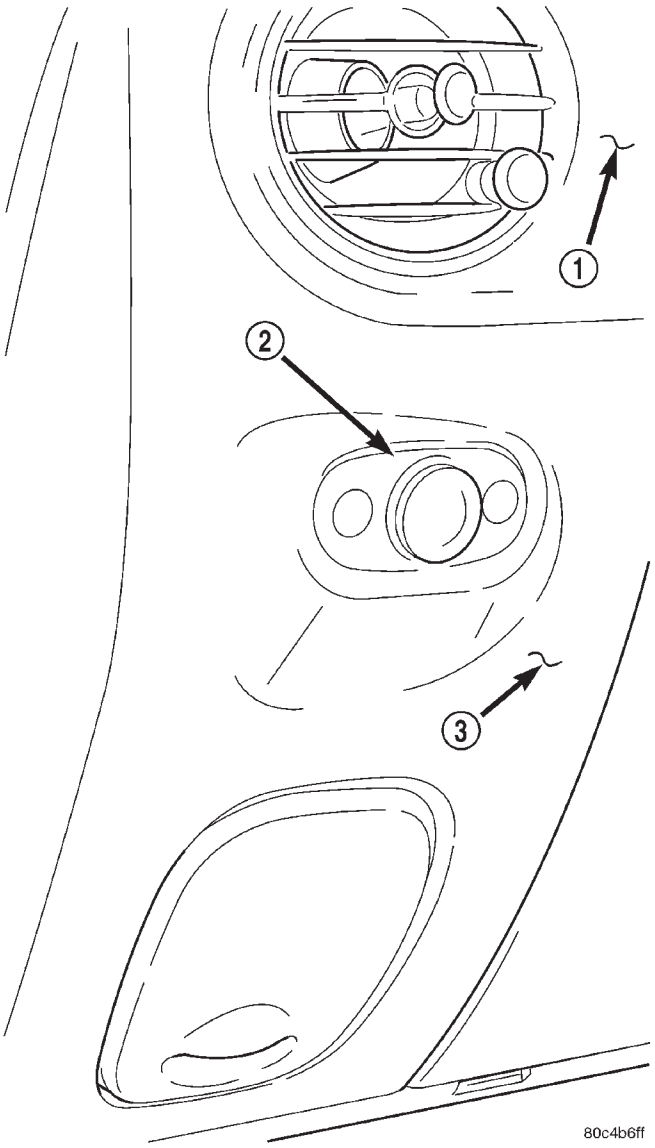

Fig. 1 Power Mirror Switch Location

1 – CLUSTER BEZEL
2 – POWER MIRROR SWITCH
3 – LEFT INSTRUMENT PANEL END CAP

DIAGNOSIS AND TESTING

MIRROR SWITCH

(1) Open hood.

(2) disconnect and isolate the battery negative cable (Fig. 2).

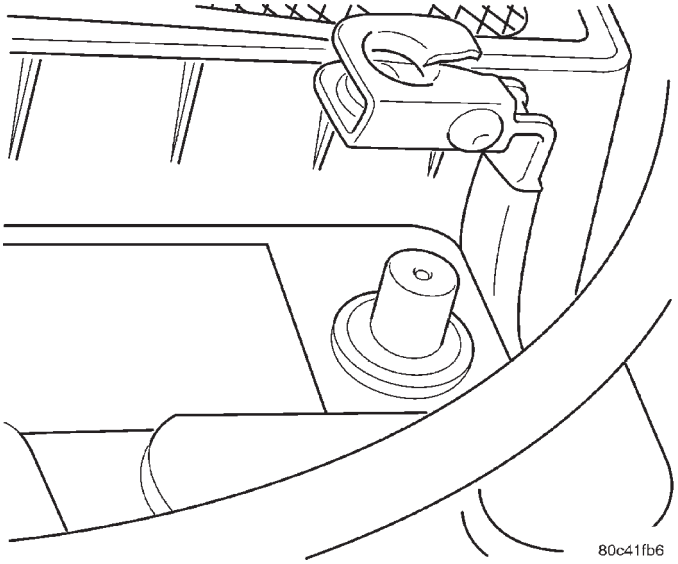

Fig. 2 Battery Negative Cable Remove/Install

(3) Remove the left lower instrument panel bezel. Pull top rearward, lower to floor and with a quick pulling motion remove off instrument panel.

(4) Remove two screws to the left instrument panel end cover.

(5) Pull the left end cover rearward to unsnap (Fig. 3). Maneuver it out from underneath the left A-pillar trim and top cover. Removal of these components is not necessary.

(6) Disconnect the power mirror switch wiring connector and remove end cover from vehicle.

(7) Using an ohmmeter, test for continuity between the terminals of the switch as shown in the Mirror Switch Test table.

(8) If test results are not obtained as shown in the Mirror Switch Test table, replace the switch.

MIRROR MOTOR

(1) Open hood.

(2) Disconnect and isolate the battery negative cable (Fig. 4)

(3) Remove the front door trim panel. Refer to Body, Front Door Trim, Removal and Installation.

(4) Disconnect wire connector from the switch.

(5) Using two jumper wires, one connected to a 12 volt battery source, and the other connected to a good body ground. Refer to the Mirror Motor Test table for appropriate mirror response, using the mirror switch wiring harness connector (Fig. 5).

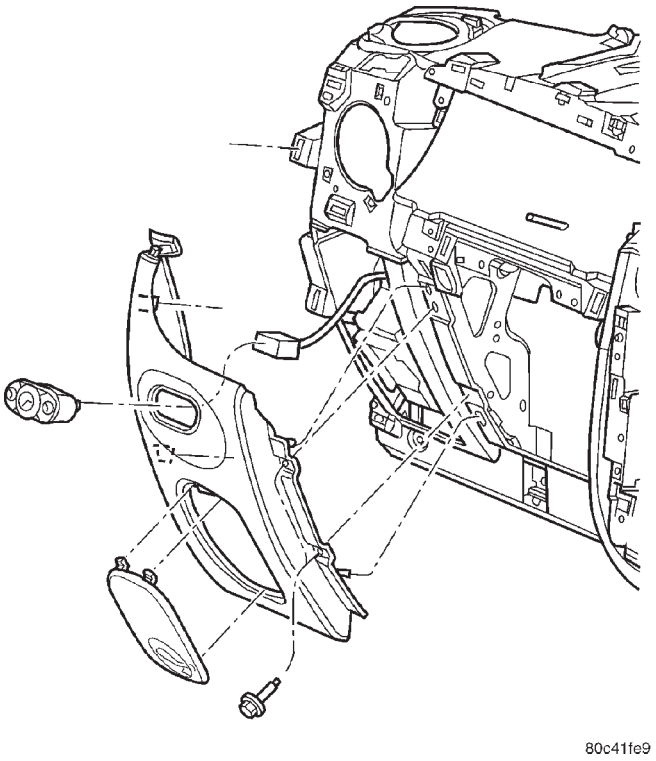

Fig. 3 Left Instrument Panel End Cover Remove/ Install

MIRROR SWITCH TEST TABLE

SWITCH POSITION Move Button	CONTINUITY BETWEEN TERMINALS
Mirror in L Position	
▲	PIN 2 to 4 PIN 4 to 7 PIN 8 to 10
▶	PIN 3 to 8 PIN 8 to 9 PIN 4 to 10
▼	PIN 2 to 8 PIN 7 to 8 PIN 4 to 10
◀	PIN 3 to 4 PIN 4 to 9 PIN 8 to 10
Mirror in R Position	
▲	PIN 2 to 4 PIN 4 to 7 PIN 1 to 8
▶	PIN 1 to 4 PIN 3 to 8 PIN 8 to 9
▼	PIN 1 to 4 PIN 2 to 8 PIN 7 to 8
◀	PIN 3 to 4 PIN 1 to 8 PIN 4 to 9

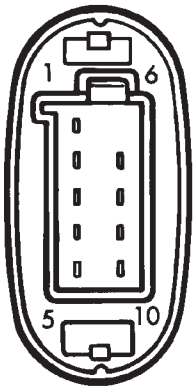

948T-5

DIAGNOSIS AND TESTING (Continued)

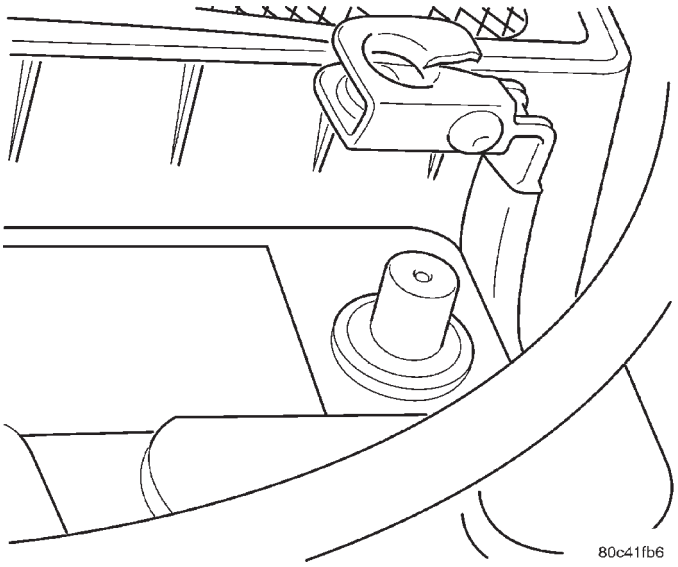

Fig. 4 Battery Negative Cable Remove/Install

(6) If test results are not obtained as shown in the Mirror Motor Test table, check for open or shorted circuit, or replace mirror assembly as necessary.

If mirror motor tests OK, go to Mirror Switch Test.

MIRROR MOTOR TEST

		MIRROR REACTION	
12 VOLT	**GROUND**	**LEFT**	**RIGHT**
9	10		UP
4	1	UP	
10	9		DOWN
1	4	DOWN	
10	2		RIGHT
1	8	RIGHT	
2	10		LEFT
8	1	LEFT	

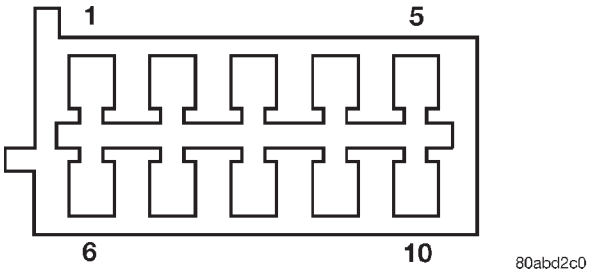

Fig. 5 Mirror Switch Harness Connector

REMOVAL AND INSTALLATION

INSIDE REAR VIEW MIRROR ASSEMBLY

REMOVAL

(1) Open door.
(2) Loosen mirror set screw.
(3) Lift mirror from mounting button.

INSTALLATION

(1) Place mirror on mounting button.
(2) Tighten mirror set screw. Ensure the mirror is fully locked into place.
(3) Close door.

MIRROR SWITCH

REMOVAL

(1) Open hood.
(2) Disconnect and isolate the battery negative cable (Fig. 2).
(3) Remove the left lower instrument panel bezel. Pull top rearward, lower to floor and with a quick pulling motion remove off instrument panel.
(4) Remove two screws to the left instrument panel end cover.
(5) Pull the left end cover rearward to unsnap (Fig. 3). Maneuver it out from underneath the left A-pillar trim and top cover. Removal of these components is not necessary.
(6) Disconnect the power mirror switch wiring connector and remove end cover from vehicle.
(7) With the left end cover on the bench, gently pry in on the tabs of the mirror switch and push through the front of the cover and remove (Fig. 6).

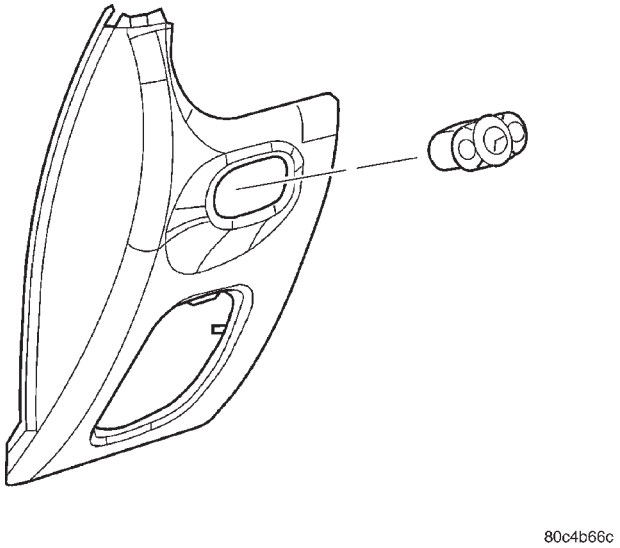

Fig. 6 Power Mirror Switch Remove/Install

REMOVAL AND INSTALLATION (Continued)

INSTALLATION

(1) Place the mirror switch in cover opening and firmly snap into place (Fig. 6).

(2) Connect the power mirror switch wiring connector.

(3) Place the left end cover in position and snap into place. Make sure that it is underneath the A-pillar trim and top cover (Fig. 3).

(4) Install two screws to the left instrument panel end cover.

(5) Place left lower instrument panel bezel in position and make sure the orientation of the hinge is correct and snap bezel hinge into place

(6) Roll bezel upward and snap into place.

(7) Connect the battery negative cable (Fig. 2).

(8) Close hood.

(9) Verify vehicle and system operation.

SIDE VIEW MIRROR ASSEMBLY

Refer to Body, Side View Mirror Removal and Installation.

POWER MIRRORS

TABLE OF CONTENTS

page

DESCRIPTION AND OPERATION
POWER FOLD-AWAY SIDE VIEW MIRRORS 1
DIAGNOSIS AND TESTING
MIRROR SWITCH TEST - POWER FOLD-AWAY - RHD 1
MIRROR MOTOR TEST – POWER FOLD-AWAY – RHD 2
HEATED MIRROR TEST – POWER FOLD-AWAY – RHD 3
REMOVAL AND INSTALLATION
POWER MIRROR SWITCH – RHD 4
SIDE VIEW MIRROR - RHD 4

DESCRIPTION AND OPERATION

POWER FOLD-AWAY SIDE VIEW MIRRORS

DESCRIPTION

Some vehicles are equipped with Power Fold-Away Side View Mirrors. This feature allows both the driver and passenger side view mirrors to fold inward (retract) on demand. This feature is controlled by a additional switch located on the power mirror switch (Fig. 1).

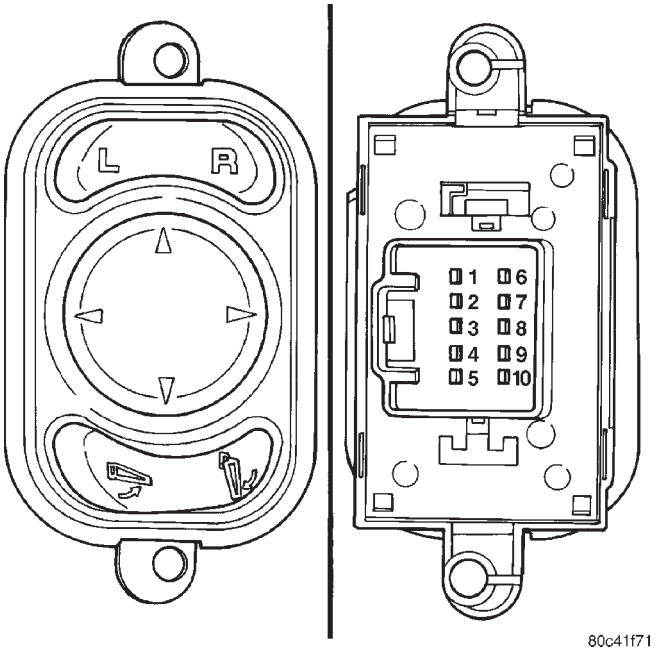

Fig. 1 Power Fold-Away Mirror Switch

The fold-away side view mirror is attached to the vehicle's door in the same manner as mirrors without the fold-away option. The fold-away mirrors unique option is the internal motor which allows the mirrors to fold inward on demand. The fold-away mirror motor is not serviceable separately and if a motor is found to be faulty the entire side view mirror must be replaced.

OPERATION

When the mirror retract switch is depressed (Fig. 1) both of the side view mirrors will fold inward, Thus making the overall width of the vehicle the smallest possible. This can be very helpful were parking space is a absolute minimum.

The power fold away mirror system consists of the following components: mirror switch, side view mirror, relay, wires and fuse. Refer to Wiring Diagrams for complete schematic of system. Refer to Diagnosis and Testing for power fold-away system troubleshooting.

DIAGNOSIS AND TESTING

MIRROR SWITCH TEST - POWER FOLD-AWAY - RHD

The following test is designed to be used only on vehicles equipped with "retractable" or power fold-away side view mirrors.

(1) Remove power mirror switch from mounting position. Refer to the procedure in this group.

(2) Using an ohmmeter, test for continuity between the terminals of the switch as shown in the tables below.

NOTE: When testing using the chart below be certain to read the chart correctly. Example - When testing left mirror "DOWN↓", pins 1, 9, 10 will show continuity to each other but not with 3, 4, 5.

(3) If test results are not obtained as shown in the tables below, replace the switch.

DIAGNOSIS AND TESTING (Continued)

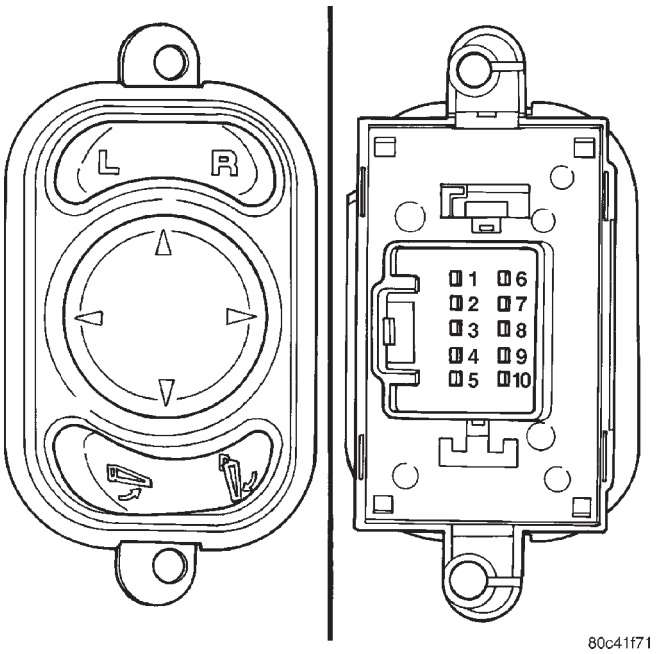

Fig. 2 Power Fold-Away Mirror Switch

EXTENDED MIRROR SWITCH CIRCUIT TEST

NOTE: MIRROR POSITION SWITCH MUST BE IN THE "EXTENDED" POSITION TO USE CHART BELOW.

WOBBLE PLATE POSITION	LEFT MIRROR SELECTED	RIGHT MIRROR SELECTED
	CONTINUITY BETWEEN PINS	CONTINUITY BETWEEN PINS
↓	I, 9, 10 3, 4, 5	6, 9, 10 3, 4, 5
↑	1, 4, 5 3, 9, 10	6, 4, 5 3, 9, 10
→	2, 9, 10 3, 4, 5	7, 9, 10 3, 4, 5
←	2, 4, 5 3, 9, 10	7, 4, 5 3, 9, 10

RETRACTED MIRROR SWITCH CIRCUIT TEST

NOTE: MIRROR POSITION SWITCH MUST BE IN THE "RETRACTED" POSITION TO USE CHART BELOW.

WOBBLE PLATE POSITION	LEFT MIRROR SELECTED	RIGHT MIRROR SELECTED
	CONTINUITY BETWEEN PINS	CONTINUITY BETWEEN PINS
↓	1, 3, 4, 9	3, 4, 6, 9
↑	1, 3, 4, 9	3, 4, 6, 9
→	2, 3, 4, 9	3, 4, 7, 9
←	2, 3, 4, 9	3, 4, 7, 9

MIRROR MOTOR TEST – POWER FOLD-AWAY – RHD

The following test is designed to test the fold-away mirror motor inside the side view mirror.

NOTE: Battery must be fully charged prior to performing this test.

(1) Remove the appropriate door trim panel retaining screws and bolts. Refer to Body for detailed instructions.

(2) Unsnap door trim panel retaining clips to free trim panel from door panel.

(3) Remove power mirror electrical connector push-pin from inner door panel.

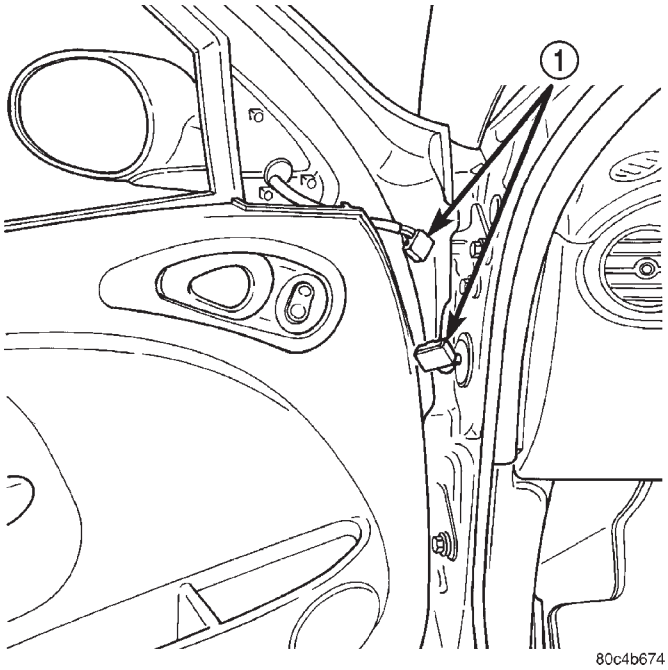

Fig. 3 Accessing Power Mirror Electrical Connector

1 – POWER MIRROR ELECTRICAL CONNECTORS

DIAGNOSIS AND TESTING (Continued)

(4) Disconnect mirror electrical connector and position as shown (Fig. 5).

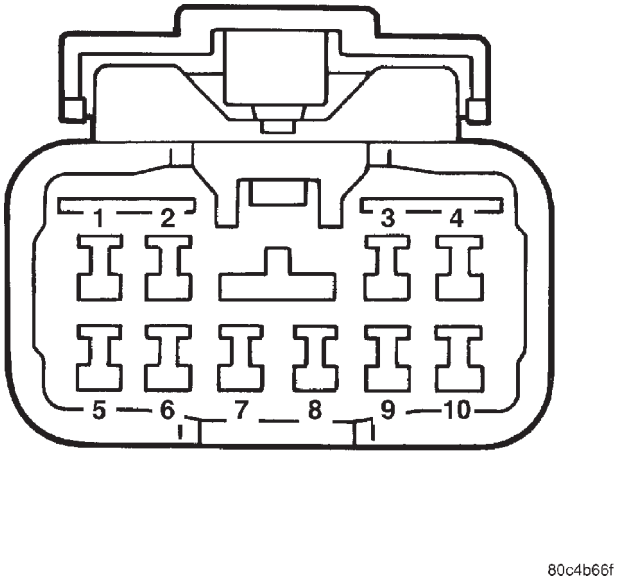

Fig. 4 Power Mirror Electrical Connector

(5) Depress the mirror "retract"switch and using a voltmeter check pin # 5 for 12v (Fig. 6). If battery voltage is not present check wiring and or fuse for open. Refer to Wiring Diagrams for a complete schematic of the mirror fold-away system.

(6) Check for good ground. Refer to Wiring Diagrams for connector pin-out schematic.

(7) If test above concluded that 12v is present at pin # 5 and a good ground is present, the system up to the mirror is functioning properly. Replace the side view mirror assembly.

HEATED MIRROR TEST – POWER FOLD-AWAY – RHD

The following test is designed to test the heating element inside the side view mirror.

NOTE: Battery must be fully charged prior to testing heated mirror function.

(1) Remove the appropriate door trim panel retaining screws and bolts. Refer to Body for detailed instructions.

(2) Unsnap door trim panel retaining clips to free trim panel from door panel.

(3) Remove power mirror electrical connector push-pin from inner door panel.

(4) Disconnect mirror electrical connector and position as shown (Fig. 5).

(5) Turn ignition key to the on position, depress the window defogger switch and using a voltmeter check pin # 2 for 12v (Fig. 6). If battery voltage is not present check wiring and or fuse for open. Refer to

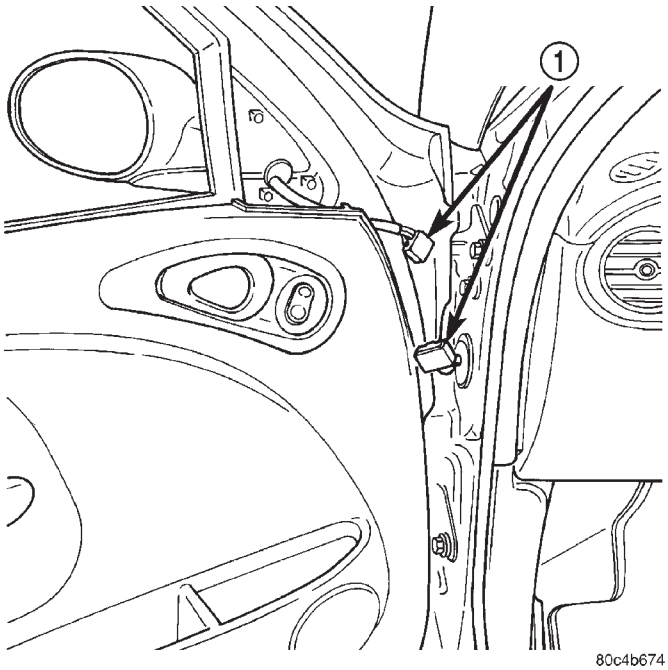

Fig. 5 Accessing Power Mirror Electrical Connector
1 – POWER MIRROR ELECTRICAL CONNECTORS

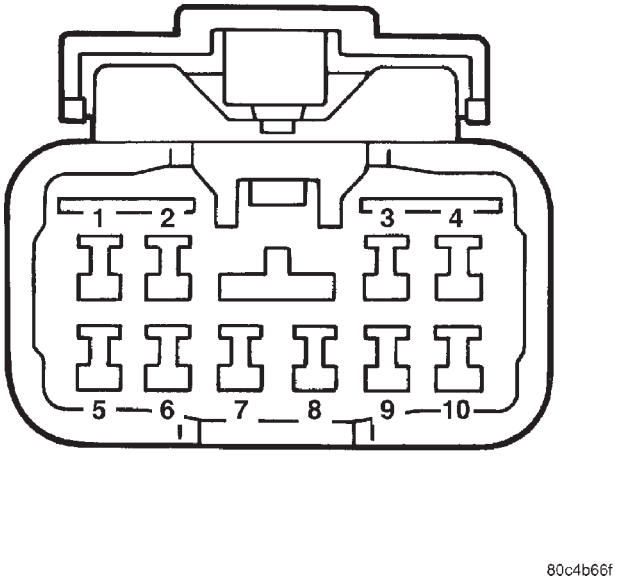

Fig. 6 Power Mirror Electrical Connector

Wiring Diagrams for a complete schematic of the defogger system.

(6) Check for good ground. Refer to Wiring Diagrams for connector pin-out schematic.

(7) If test above concluded that 12v is present at pin # 2 with defogger switch "ON" and a good ground is present, the defogger system up to the mirror is functioning properly. Replace the side view mirror assembly.

REMOVAL AND INSTALLATION

POWER MIRROR SWITCH – RHD

REMOVAL

(1) Disconnect and isolate the negative battery cable.

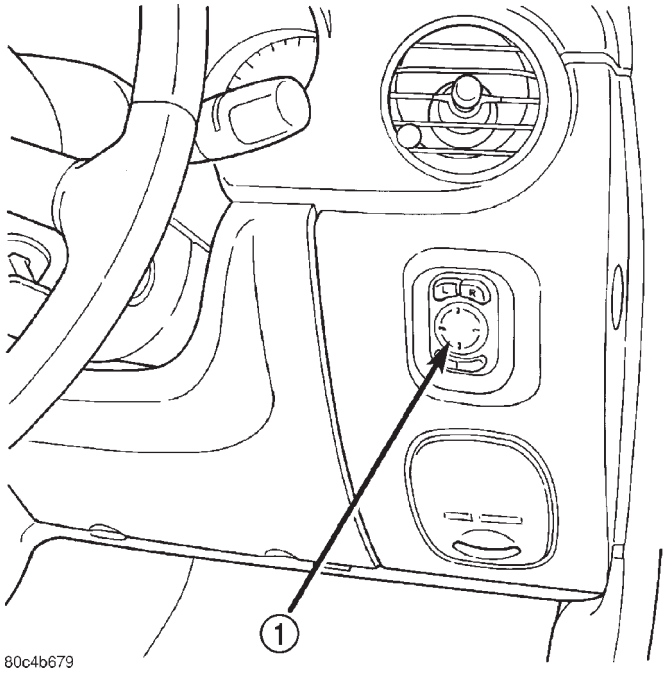

Fig. 7 RHD Power Mirror Switch Location

1 – POWER MIRROR SWITCH

(2) Remove the lower instrument panel bezel from under steering column. Refer to Instrument Panel for detailed instructions.

(3) Remove the instrument panel end cover retaining screws and pull rearward to release retaining clips.

(4) Disconnect power mirror switch electrical connector.

(5) Remove the mirror switch retaining screws and remove the switch from the end cover.

INSTALLATION

(1) Connect mirror switch electrical and test function of the power mirror switch.

(2) If test OK, install switch retaining screws holding switch to end cover.

(3) Install the lower instrument panel bezel.

(4) Connect negative battery cable.

SIDE VIEW MIRROR - RHD

REMOVAL

(1) Disconnect and isolate the negative battery cable.

(2) Open the appropriate door and remove the front door trim bezel.

(3) Remove the front door trim panel from the vehicle. Refer to Body for detailed instructions.

(4) Remove connector pushpin from inner door panel and disconnect the side view mirror electrical connector.

(5) Remove the side view mirror retaining nuts.

(6) Remove the side view mirror from the vehicle.

INSTALLATION

(1) Install the mirror on the door and install retaining nuts. Torque to 7.4 N·m (65 in. lbs.).

(2) Connect side view mirror electrical connector and test mirror function.

(3) Snap connector pushpin into door inner panel and install door trim panel. Refer to Body for specifications.

(4) Install front door trim bezel.

(5) Connect the negative battery cable.

CHIME WARNING SYSTEMS

TABLE OF CONTENTS

page

DESCRIPTION AND OPERATION
CHIME WARNING SYSTEM 1
DIAGNOSIS AND TESTING
FASTEN SEAT BELTS 2
KEY LEFT IN IGNITION. 2
CHIME SYSTEM CONDITIONS 2

page

REMOVAL AND INSTALLATION
CHIME. 2
SEAT BELT BUCKLE 2
HEADLAMP SWITCH 2
KEY-IN IGNITION SWITCH 2

DESCRIPTION AND OPERATION

CHIME WARNING SYSTEM

DESCRIPTION

The Chime Module is located within the instrument cluster. The chime system provides the driver with warning chimes for:

- Seat Belt
- Exterior Lamps ON
- Key-In Ignition
- Warning Lamp Announcement
- Turn Signal On
- Park Brake
- Low Fuel

OPERATION

FASTEN SEAT BELT

The seat belt reminder system uses both visual and audible signals. A combined seat belt and key reminder chime with a red light on the instrument panel.

The system will always illuminate the seat belt reminder lamp for four to eight seconds when the ignition switch is turned to the ON position. The CHIME will sound during the same time interval if the driver's seat belt is not fastened. Passenger belts are not connected to the system.

HIGH SPEED WARNING CHIME

Some BUX vehicles are equipped with an audible high speed warning chime that will sound continuously any time the vehicle speed reaches 120 Km/h or faster.

HEADLAMPS REMINDER

These are the conditions that have to be met for the headlamps on, chime function to work:

- Headlamps ON and
- Driver's door open and
- Key removed from the ignition switch.

Chime should sound until headlamps are turned off or the drivers door is closed.

KEY IN IGNITION REMINDER

The chime will activate if the drivers door is opened and the key is in the ignition switch, with the ignition switch in either the OFF, LOCK, or the accessory (ACC) position.

DOOR AJAR CHIME

The chime will sound once when:

- Door opened and
- Ignition in RUN position and
- Vehicle speed is present

TURN SIGNAL ON

The cluster shall remind the driver that either turn signal has been left on by continuously chiming after:

- Left or Right turn signal left ON for 1.0 mile and
- Vehicle speed of 15 mph or greater.

PARK BRAKE REMINDER

The cluster shall chime 10 times and continuously flash the brake indicator when:

- Park brake is activated and
- Vehicle speed is present.

LOW FUEL REMINDER

When the fuel level drops to about 1/8 tank, the fuel symbol will light and a single chime will sound. The light will remain on until fuel is added. If the fuel level drops to about 1/16 of a tank, the fuel symbol will flash several times and the chime will sound several times.

DIAGNOSIS AND TESTING

FASTEN SEAT BELTS

To test the fasten seat belts function, turn the ignition switch to the ON position with the driver's seat belt unbuckled and fully retracted. The seat belt warning lamp should light for four to eight seconds and the tone should sound three to five times.

If the lamp does not light, check the connection at the seat belt retractor. Replace as necessary.

KEY LEFT IN IGNITION

To test the key left in ignition function, insert key into the ignition and open the driver's door. Chime should sound until key is removed from ignition or driver's door is closed.

If these conditions are met and there is still a problem with the system, refer to Chime System Conditions in this section for further diagnosis and testing.

CHIME SYSTEM CONDITIONS

NO TONE WHEN IGNITION SWITCH IS TURNED ON AND DRIVERS SEAT BELT IS UNBUCKLED

(1) Using an ohmmeter, with the seat belt fully retracted, check for continuity to ground at Pin 20 of the 26-way cluster harness connector. If OK, go to step 2. If not OK, repair as necessary.

(2) Using voltmeter, check for battery feed at Pin 4 of the 26-way cluster harness connector. Check for ignition feed at Pin 14 of the 26-way cluster harness connector. If not OK, repair as necessary.

NO FASTEN SEAT BELT LAMP WHEN IGNITION SWITCH IS ON

(1) Check for battery feed at cluster harness connector Pin 4.

(2) Check for ignition feed at cluster harness connector Pin 14. Repair as necessary.

NO TONE WHEN HEADLAMPS ARE ON AND DRIVERS DOOR IS OPEN

(1) Remove the key from the ignition.

(2) Check left door jamb switch for good ground when drivers door is open.

(3) Check for ground at Pin 1 of the 26-way cluster harness connector.

(4) Check for battery feed at cluster harness connector Pin 4 of the 26-way cluster harness connector.

(5) Check for NO voltage at Pin 14. Ignition voltage must not be present for the chime to work.

(6) Check headlamp switch.

NO TONE WHEN KEY IS LEFT IN IGNITION AND DRIVERS DOOR IS OPEN

(1) Check for continuity to ground at Pin 1 of the 26-way cluster harness connector. If OK, go to Step 3. If not OK, repair as necessary.

(2) Using voltmeter, check for battery feed at Pin 21 of the 26-way cluster harness connector. Check for NO ignition feed at Pin 14 of the 26-way cluster harness connector. If OK, go to Step 3. If not OK, repair as necessary.

(3) Open driver's door and ensure the ignition key is in the OFF, LOCK, or ACC position. Check for continuity to ground at Pin 9 of the 26-way cluster harness connector. If ground OK, replace cluster printed circuit board. If no ground, check key-in switch or door switch wiring and repair as necessary.

REMOVAL AND INSTALLATION

CHIME

The functions previously performed by the chime module are now part of the smart cluster. There is no serviceable part of the instrument cluster chime function. Replacement of the instrument cluster is necessary. Refer to Instrument Panel Systems, Instrument Cluster Removal and Installation.

SEAT BELT BUCKLE

Refer to Body, Front Seat Belt Buckle Removal and Installation.

HEADLAMP SWITCH

Refer to Turn Signal and Hazard Warning Systems, Multi-Function Switch Removal and Installation.

KEY-IN IGNITION SWITCH

The Key-in switch is built into the ignition switch assembly. Should the Key-in switch require service, the ignition switch assembly must be replaced. Refer to Ignition System, Ignition Switch Removal and Installation.

OVERHEAD CONSOLE SYSTEMS

TABLE OF CONTENTS

page

DESCRIPTION AND OPERATION
OVERHEAD CONSOLE SYSTEM 1
AMBIENT TEMPERATURE SENSOR 2
OVERHEAD CONSOLE READING AND COURTESY LAMP 2
DIAGNOSIS AND TESTING
SELF-DIAGNOSTIC TEST 2
AMBIENT TEMPERATURE SENSOR 2

page

SERVICE PROCEDURES
COMPASS CALIBRATION 3
DEMAGNETIZING PROCEDURE 3
VARIANCE SETTING PROCEDURE 4
REMOVAL AND INSTALLATION
AMBIENT TEMPERATURE SENSOR 4
OVERHEAD CONSOLE 4

DESCRIPTION AND OPERATION

OVERHEAD CONSOLE SYSTEM

DESCRIPTION

The overhead console includes the Compass/Temperature read-out and two reading and courtesy lamps. This display provides the outside temperature and one of eight compass readings to indicate the direction the vehicle is facing. The outside temperature is monitored by the ambient temperature sensor mounted on the support brace in front of the A/C condenser, behind the front grille. The ambient temperature is hardwired directly to the overhead console. On vehicles equipped with a power sunroof option, the overhead console also houses the power sunroof switch between the two reading and courtesy lamps. The overhead console is snapped into place towards the front of the vehicle and indexes on the headliner. There is a STEP button for the compass/temperature read-out located forward of the sunroof switch (if equipped), and between the map/reading/courtesy lamps.

OPERATION

There is a STEP button to display the compass/temperature, and can be read in either F° or C°. When the vehicle is first turned ON, you may select to have the overhead console:

- Blank display
- Compass/Temperature displayed in Fahrenheit
- Compass/Temperature displayed in Celsius

To put the compass/temperature in the F° display, press the STEP button once. To put the compass/temperature in the C° display, press the STEP button twice. A third press of the STEP button will return it to the blank display.

AUTOMATIC COMPASS CALIBRATION

The self calibrating feature of the compass eliminates the need to calibrate the compass for normal conditions. After approximately 10 ignition cycles the CAL light will turn ON. The CAL symbol may also appear after the vehicle is subjected to a high level of magnetism. After completing three 360 turns in an area free from large metal or metallic objects, the CAL symbol will turn off and the compass will function normally.

MANUAL COMPASS CALIBRATION

If the compass appears to be in the locked up position, you may calibrate the compass. Find an open area away from large metal objects. With the ignition OFF, press and hold the STEP button while turning ON the ignition. Release the STEP button and the CAL light will appear (about 10-15 seconds). Drive in 3 complete 360 circles. The CAL light will turn off and the compass will be calibrated.

SET ZONE

Variance is the difference between magnetic North and geographic North. For proper compass function, the correct variance zone must be set. Refer to the variance map for the correct variance zone. To check the variance zone, the ignition switch must be ON and the compass/temperature displayed. Press and hold the STEP button for about 5-15 seconds until ZONE appears in the display, then release the button. The number displayed is the variance zone used by the compass. To change the zone, press the STEP button to scroll through numbers 1 through 15.

NOTE: When the correct variance is selected, the Compass/Temperature display will return to normal after approximately 15 seconds.

DESCRIPTION AND OPERATION (Continued)

OUTSIDE TEMPERATURE

Because engine temperature can increase the displayed temperature, causing the readings to be slowly updated.

If the display shows OC (-49° F (-45° C) or SC (140° F (60° C), there is an OPEN or SHORT CIRCUIT and system diagnosis and repair is required.

AMBIENT TEMPERATURE SENSOR

DESCRIPTION

Ambient air temperature is monitored by the compass/temperature display unit. It receives a hard wired input from the ambient temperature sensor. The ambient temperature sensor is a variable resistor mounted to a bracket that is secured with a nut to the bracket in front of the A/C condenser, behind the radiator grille.

The ambient temperature sensor cannot be adjusted or repaired and, if faulty or damaged, it must be replaced.

OPERATION

The ambient temperature sensor is a variable resistor that operates on a five-volt reference signal. The resistance in the sensor changes as temperature changes, changing the temperature sensor signal circuit voltage to compass/temperature display unit. Based upon the resistance in the sensor, the compass/temperature display unit senses a specific voltage on the temperature sensor signal circuit, which it is programmed to correspond to a specific temperature. The compass/temperature display unit then displays the proper ambient temperature.

OVERHEAD CONSOLE READING AND COURTESY LAMP

DESCRIPTION

The overhead console is equipped with two individual reading and courtesy lamps. The lamp lenses are the only visible components of these lamps. The reading and courtesy lamp lenses are mounted near the rear of the overhead console housing. Each lamp has its own switch, bulb, reflector and lens; but both lamps share a common lamp housing within the overhead console. Each lamp is designed and aimed to provide illumination that will be directed only to that side of the vehicle on which the lamp is located.

The reading and courtesy lamp lenses and the lamp housing and reflector unit are serviced only as a unit with the overhead console housing. If either of the lamp lenses or the lamp housing is faulty or damaged, the overhead console housing unit must be replaced.

OPERATION

The overhead console reading and courtesy lamps operate on battery current that is provided at all times, regardless of the ignition switch position. The ground feed for the lamps is switched through the integral reading and courtesy lamp switches or through the door jamb switches.

All reading and courtesy lamps located in the overhead console are activated by the door jamb switches. When all of the doors are closed, these lamps can be individually activated by depressing the corresponding lens. When any door is open, depressing the lamp lenses to activate the lamp switches will not turn the lamps off.

Each light is turned ON by pressing the lens. Press the lens a second time to turn the light OFF. The lights also come ON when a door is opened or the dimmer switch is turned fully upward, past the second detent.

NOTE: The lights will remain ON until the switch is pressed a second time, so be sure they have been turned OFF before leaving the vehicle. They will not turn OFF automatically.

DIAGNOSIS AND TESTING

SELF-DIAGNOSTIC TEST

(1) With the ignition switch in the OFF position, press the STEP button and hold.

(2) Turn ignition switch ON, then release the STEP button.

(3) All segments on the VFD will light for 2-4 seconds. Check for segments that are not illuminated/ and illuminate all the time. The segments will start from the left and move across the VFD to the right.

(4) Test is complete when an F (FAIL) or a P (PASS) is displayed. If an F is displayed, replace the overhead console.

AMBIENT TEMPERATURE SENSOR

The thermometer function is supported by the ambient temperature sensor, a wiring circuit, and the compass/temperature display unit.

If the display shows OC (-49° F (-45° C) or SC (140° F (60° C),, there is an OPEN or SHORT CIRCUIT and it must be repaired before the VFD can be tested.

The ambient temperature sensor circuit can also be diagnosed using the following Sensor Test, and Sensor Circuit Test. If the temperature sensor and circuit are confirmed to be OK, but the temperature display is inoperative or incorrect, replace the compass/temperature display.

DIAGNOSIS AND TESTING (Continued)

SENSOR TEST

(1) Turn the ignition switch to the OFF position. Disconnect and isolate the battery negative cable (Fig. 1). Disconnect the ambient temperature sensor wire harness connector.

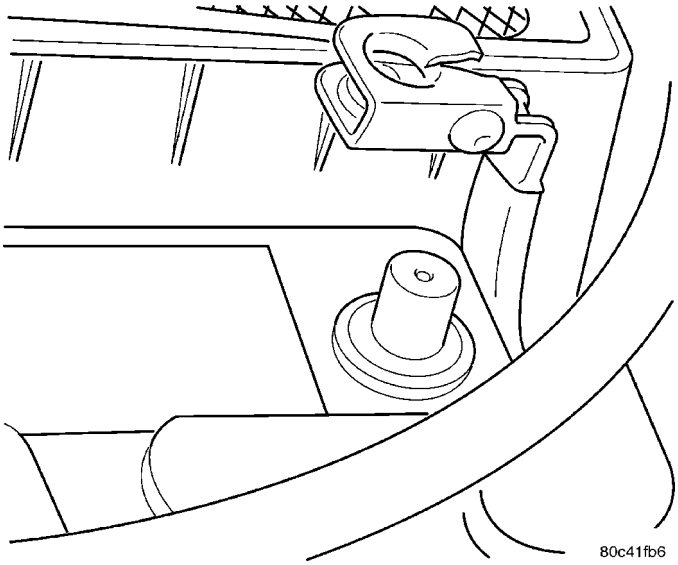

Fig. 1 Battery Negative Cable Remove/Install

(2) Measure the resistance of the ambient temperature sensor. At -40° C (-40° F), the sensor resistance is 336 kilohms. At 55° C (140° F), the sensor resistance is 2.488 kilohms. The sensor resistance should read between these two values. If OK, refer to Sensor Circuit Test in the Diagnosis and Testing section of this group. If not OK, replace the faulty ambient temperature sensor.

SENSOR CIRCUIT TEST

(1) Turn the ignition switch to the OFF position. Disconnect and isolate the battery negative cable. Disconnect the ambient temperature sensor wire harness connector and the compass/temperature display unit wire harness connector.

(2) Connect a jumper wire between the two terminals in the body half of the ambient temperature sensor wire harness connector.

(3) Check for continuity between the sensor return circuit and the ambient temperature sensor signal circuit cavities of the compass/temperature display unit wire harness connector. There should be continuity. If OK, go to Step 4. If not OK, repair the open sensor return circuit or ambient temperature sensor signal circuit to the ambient temperature sensor as required.

(4) Remove the jumper wire from the body half of the ambient temperature sensor wire harness connector. Check for continuity between the sensor return circuit cavity of the compass/temperature display unit wire harness connector and a good ground. There should be no continuity. If OK, go to Step 5. If not OK, repair the shorted sensor return circuit as required.

(5) Check for continuity between the ambient temperature sensor signal circuit cavity of the compass/temperature display unit wire harness connector and a good ground. There should be no continuity. If OK, replace the compass/temperature display unit. If not OK, repair the shorted ambient temperature sensor signal circuit as required.

SERVICE PROCEDURES

COMPASS CALIBRATION

AUTOMATIC COMPASS CALIBRATION

The self calibrating feature of the compass eliminates the need to calibrate the compass for normal conditions. After approximately 10 ignition cycles the CAL light will turn ON. The CAL symbol may also appear after the vehicle is subjected to a high level of magnetism. After completing three 360 turns in an area free from large metal or metallic objects, the CAL symbol will turn off and the compass will function normally.

MANUAL COMPASS CALIBRATION

If the compass appears to be in the locked up position, you may calibrate the compass. Find an open area away from large metal objects. With the ignition ON, press and hold the STEP button approx. 5-10 seconds. Release the STEP button when the CAL light appears. Drive in 3 complete 360 circles. The CAL light will turn off and the compass will be calibrated.

Reset compass variance. The calibration procedure automatically sets the variance to 8. If you are in an area with a variance number other than 8 you must reset the variance.

DEMAGNETIZING PROCEDURE

Do not attach magnetic devices such as magnetic CB antennas to the vehicle roof. They can cause the compass to give false readings.

Every vehicle has its own magnetic field. This magnetic field is created by the various processes a steel roof goes through when the vehicle is built. A magnetic field can also be created if the roof is subjected to a magnet, example magnetic CB antenna, magnetic tipped screwdriver, etc. If the roof becomes magnetized use a demagnetizing Tool 6029 to demagnetize the roof.

In this demagnetizing procedure you will use the demagnetizing tool to demagnetize the roof. It is

SERVICE PROCEDURES (Continued)

important that you follow the instructions below exactly.

(1) Be sure the ignition switch is in the OFF position before you begin the demagnetizing procedure.

(2) Place an 8 1/2 in. X 11 in. piece of paper lengthwise on the roof of vehicle directly above compass. The purpose of the paper is to protect the roof panel from scratches and define the area to be demagnetized.

(3) Plug in the demagnetizing tool, keeping it at least two feet away from the OTIS.

(4) Slowly approach the center of the roof panel at the windshield with the demagnetizing tool plugged in.

- Contact the roof panel with the tip of the tool.
- Use slow sweeping motions of 1/2 inch between sweeps.
- Move the tool about four inches either side of the centerline, and at least 11 inches back from the windshield.

(5) With the demagnetizing tool still energized, slowly back away from the roof panel until the tip is at least two feet from the roof before unplugging the tool.

(6) Recalibrate compass and set variance.

VARIANCE SETTING PROCEDURE

Variance is the difference between magnetic North and geographic North. In some areas the difference between magnetic and geographic north is great enough to cause the compass to give false readings. If this occurs, the variance must be set (Fig. 2).

To set the variance:

- Turn ignition key ON.
- Press the STEP button to select the Compass/ Temperature display.
- Press and hold the STEP button; the ZONE symbol should come ON in about 5 seconds.
- The VFD will display the word ZONE and the variance zone.
- Press the STEP button to select the desired zone.
- Cycle the ignition switch OFF, then ON to exit the variance zone setting screen.

REMOVAL AND INSTALLATION

AMBIENT TEMPERATURE SENSOR

REMOVAL

(1) Open hood.

(2) Disconnect and isolate the battery negative cable (Fig. 1).

(3) Remove the one retaining nut to ambient temperature sensor and remove from vehicle.

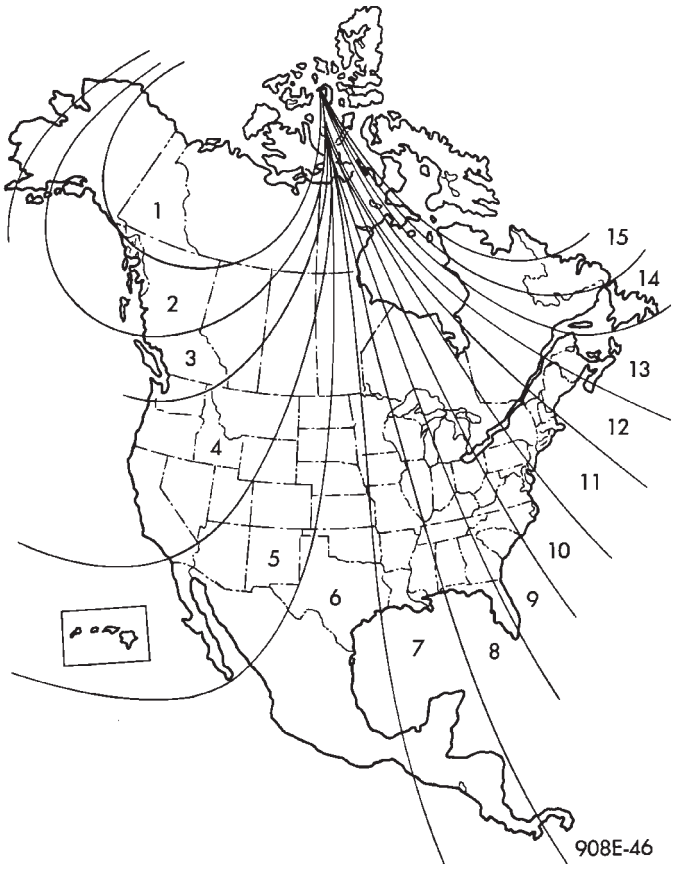

Fig. 2 Variance Zone Map

INSTALLATION

(1) Install the one retaining nut to ambient temperature sensor.

(2) Connect the battery negative cable (Fig. 1).

(3) Close hood.

OVERHEAD CONSOLE

REMOVAL

(1) Open hood.

(2) Disconnect and isolate the battery negative cable (Fig. 1).

(3) Grasp the front of the overhead console and pull downward to disconnect the front retaining clip.

(4) Slide the overhead console forward to disengage the rear tabs from the headliner.

(5) Disconnect wire connector.

(6) Unsnap compass module from inner roof panel.

(7) Remove console from vehicle.

INSTALLATION

(1) Install console into vehicle.

(2) Snap compass module onto inner roof panel.

(3) Connect wire connector.

(4) Slide the overhead console rearward to engage the rear tabs onto the headliner.

REMOVAL AND INSTALLATION (Continued)

(5) Align the front of the overhead console above the retaining slot and firmly snap into place connect the front retaining clip.

(6) Connect the battery negative cable (Fig. 1).

(7) Close hood.

(8) Calibrate compass. Refer to Service Procedures, Compass Calibration in this section.

WIRING

TABLE OF CONTENTS

	page
WIRING DIAGRAM INFORMATION	8Wa-01-1
COMPONENT INDEX	8Wa-02-1
POWER DISTRIBUTION	8Wa-10-1
FUSE BLOCK	8Wa-11-1
GROUND DISTRIBUTION	8Wa-15-1
BUS COMMUNICATIONS	8Wa-18-1
CHARGING SYSTEM	8Wa-20-1
STARTING SYSTEM	8Wa-21-1
FUEL/IGNITION SYSTEM	8Wa-30-1
TRANSMISSION CONTROL SYSTEM	8Wa-31-1
VEHICLE SPEED CONTROL	8Wa-33-1
ANTILOCK BRAKES	8Wa-35-1
VEHICLE THEFT SECURITY SYSTEM	8Wa-39-1
INSTRUMENT CLUSTER	8Wa-40-1
HORN/CIGAR LIGHTER/POWER OUTLET	8Wa-41-1
AIR CONDITIONING-HEATER	8Wa-42-1
OCCUPANT RESTRAINT SYSTEM	8Wa-43-1
INTERIOR LIGHTING	8Wa-44-1
AUDIO SYSTEM	8Wa-47-1
REAR WINDOW DEFOGGER	8Wa-48-1
OVERHEAD CONSOLE	8Wa-49-1
FRONT LIGHTING	8Wa-50-1
REAR LIGHTING	8Wa-51-1
TURN SIGNALS	8Wa-52-1
WIPERS	8Wa-53-1
POWER WINDOWS	8Wa-60-1
POWER DOOR LOCKS	8Wa-61-1
POWER MIRRORS	8Wa-62-1
POWER SEAT	8Wa-63-1
POWER SUNROOF	8Wa-64-1
SPLICE INFORMATION	8Wa-70-1
CONNECTOR PINOUTS	8Wa-80-1
CONNECTOR/GROUND LOCATIONS	8Wa-90-1
SPLICE LOCATIONS	8Wa-95-1

2001 PT CRUISER

8W-01 WIRING DIAGRAM INFORMATION

TABLE OF CONTENTS

page

WIRING DIAGRAM INFORMATION
DESCRIPTION 1
WARNING 5
DIAGNOSIS AND TESTING 5
WIRING HARNESS 5
STANDARD PROCEDURE 6
TESTING OF VOLTAGE POTENTIAL 6
TESTING FOR CONTINUITY 7
TESTING FOR SHORT TO GROUND 7
TESTING FOR A SHORT TO GROUND ON FUSES POWERING SEVERAL LOADS. 7
TESTING FOR VOLTAGE DROP 7
SPECIAL TOOLS 8
CONNECTOR - AUGAT
REMOVAL 8
INSTALLATION. 9

page

CONNECTOR - MOLEX
REMOVAL 9
INSTALLATION. 9
CONNECTOR - THOMAS AND BETTS
REMOVAL 9
INSTALLATION. 10
DIODE
REMOVAL 10
INSTALLATION. 10
TERMINAL
REMOVAL 11
INSTALLATION 11
WIRE
STANDARD PROCEDURE 12
STANDARD PROCEDURE - WIRE SPLICING . . 12

WIRING DIAGRAM INFORMATION

DESCRIPTION - HOW TO USE WIRING DIAGRAMS

DaimlerChrysler Corporation wiring diagrams are designed to provide information regarding the vehicles wiring content. In order to effectively use the wiring diagrams to diagnose and repair DaimlerChrysler Corporation vehicles, it is important to understand all of their features and characteristics.

Diagrams are arranged such that the power (B+) side of the circuit is placed near the top of the page, and the ground (B-) side of the circuit is placed near the bottom of the page (Fig. 1).

All switches, components, and modules are shown in the at rest position with the doors closed and the key removed from the ignition (Fig. 2).

Components are shown two ways. A solid line around a component indicates that the component is complete. A dashed line around the component indicates that the component is being shown is not complete. Incomplete components have a reference number to indicate the page where the component is shown complete.

It is important to realize that no attempt is made on the diagrams to represent components and wiring as they appear on the vehicle. For example, a short piece of wire is treated the same as a long one. In addition, switches and other components are shown as simply as possible, with regard to function only.

SYMBOLS

International symbols are used throughout the wiring diagrams. These symbols are consistent with those being used around the world (Fig. 3).

WIRING DIAGRAM INFORMATION (Continued)

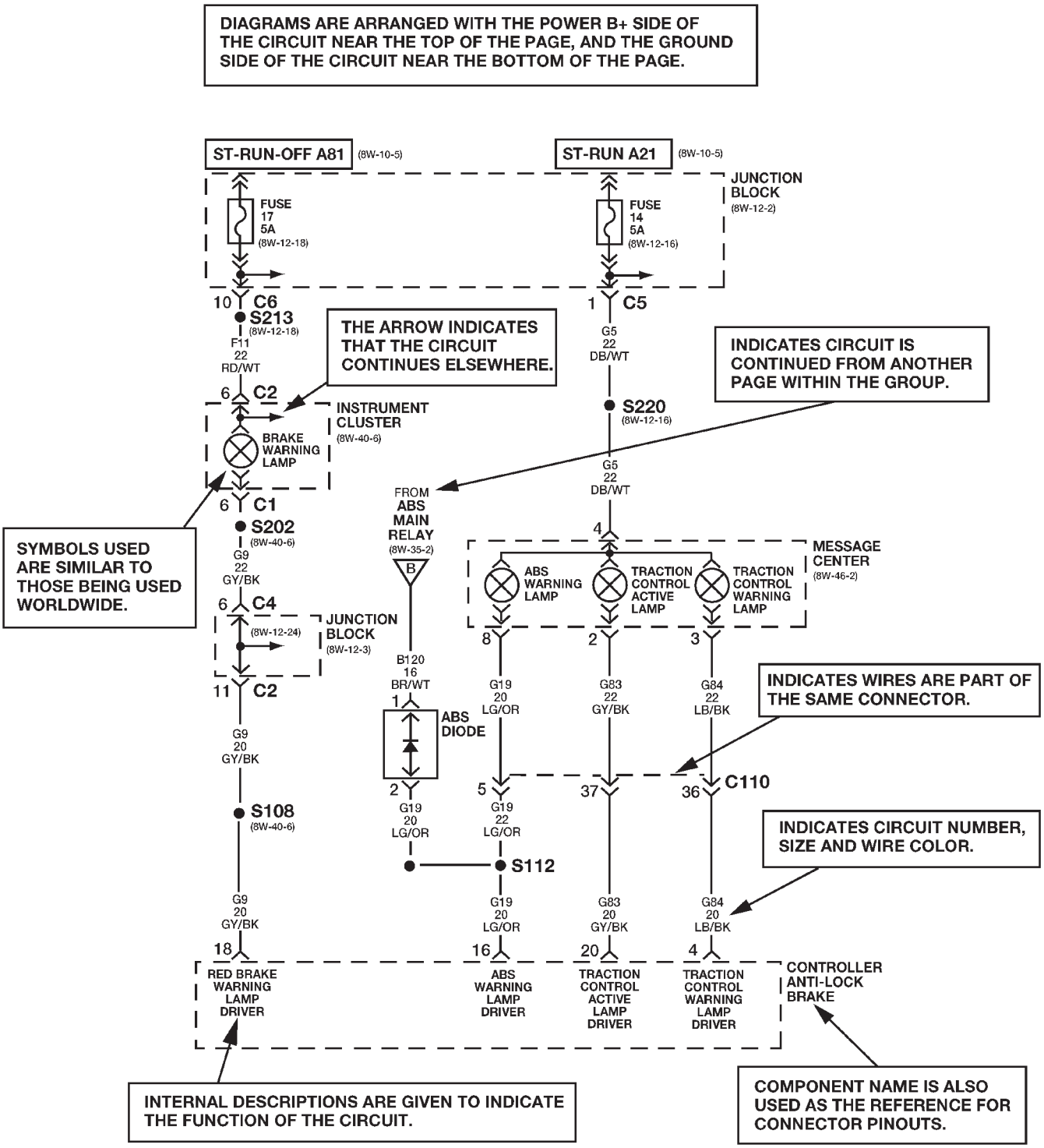

The System shown here is an EXAMPLE ONLY. It does not represent the actual circuit shown in the WIRING DIAGRAM SECTION.

80c06d01

Fig. 1 WIRING DIAGRAM EXAMPLE 1

WIRING DIAGRAM INFORMATION (Continued)

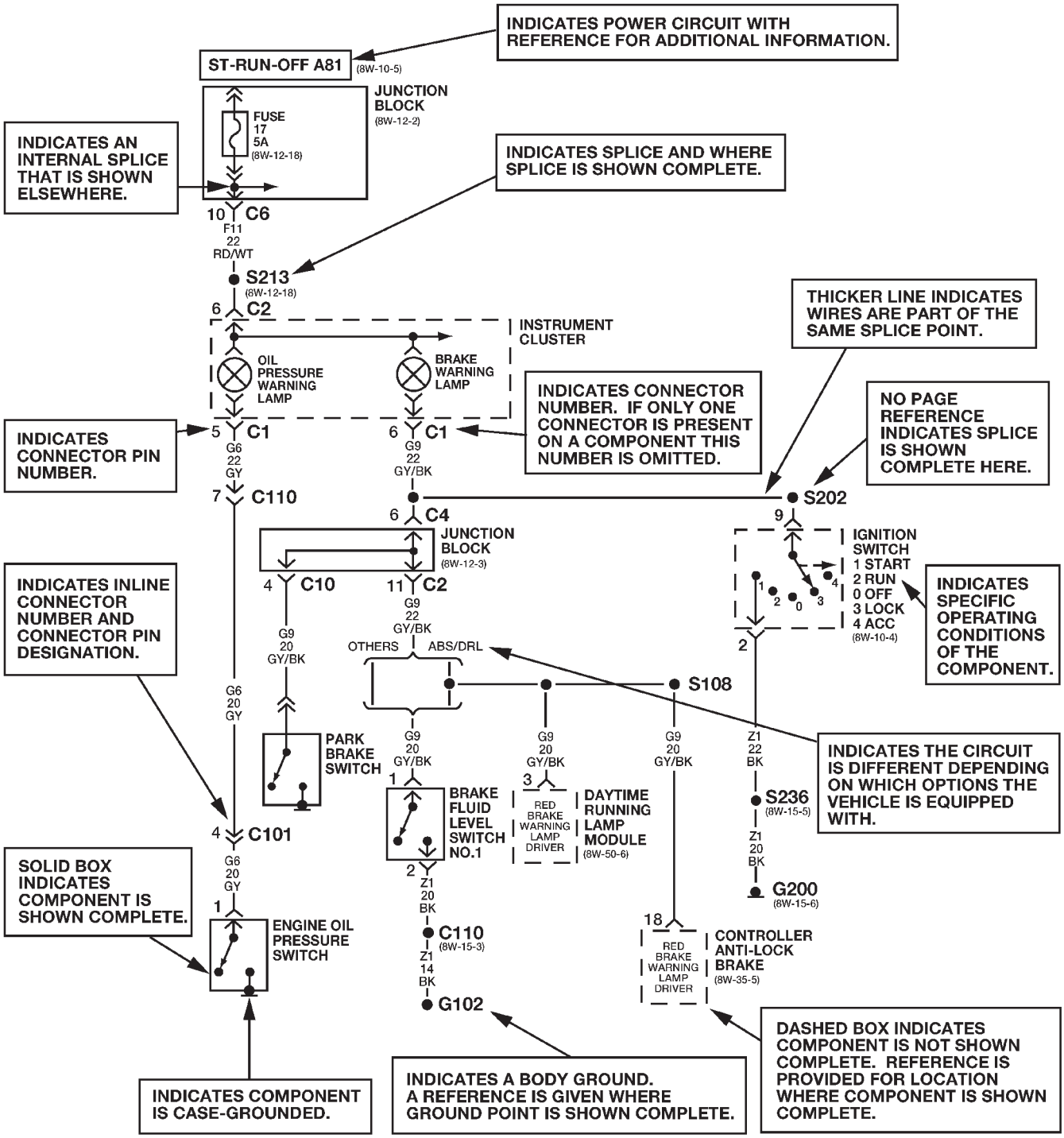

The System shown here is an EXAMPLE ONLY. It does not represent the actual circuit shown in the WIRING DIAGRAM SECTION.

80c06d02

Fig. 2 WIRING DIAGRAM EXAMPLE 2

WIRING DIAGRAM INFORMATION (Continued)

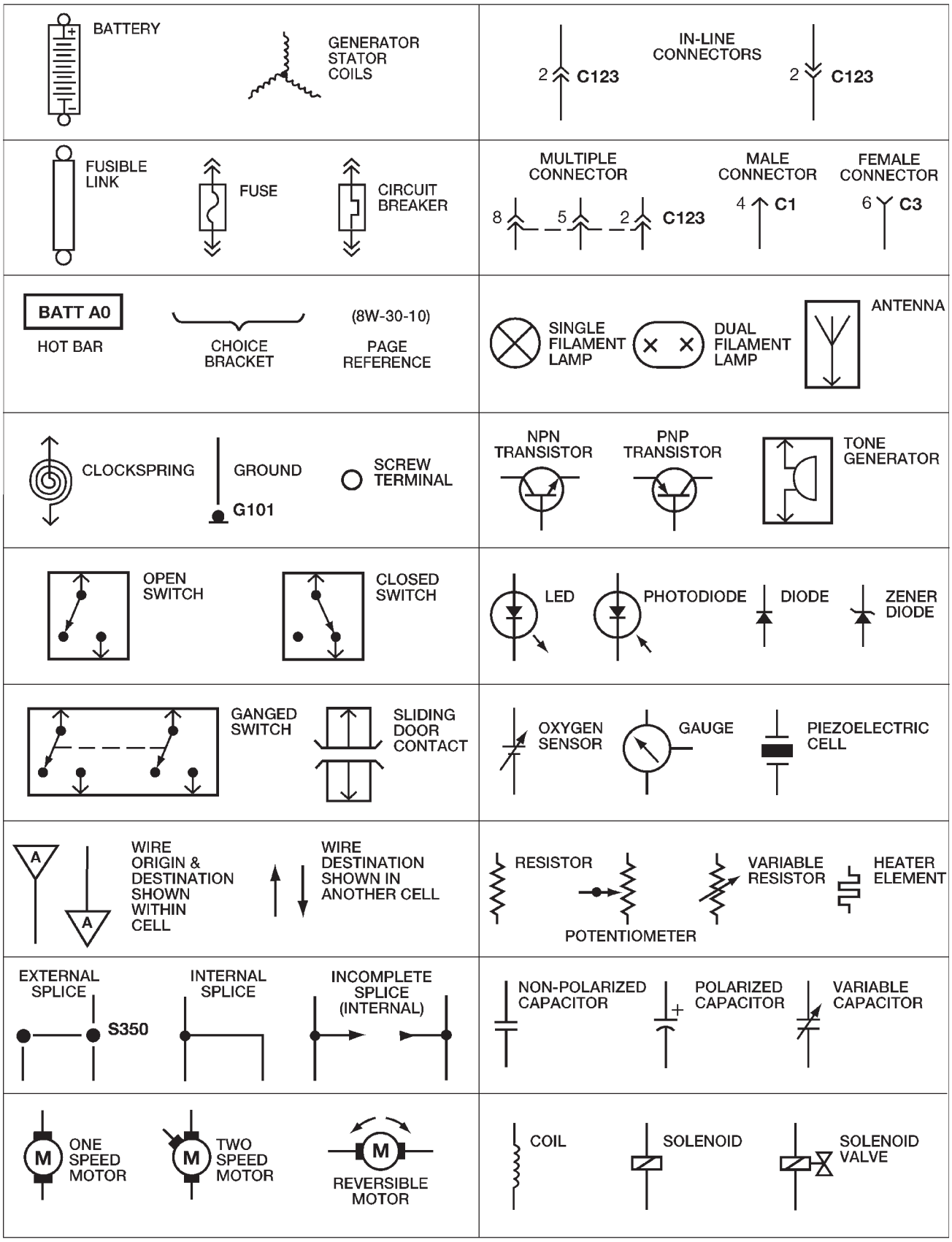

Fig. 3 WIRING DIAGRAM SYMBOLS

WIRING DIAGRAM INFORMATION (Continued)

TERMINOLOGY

This is a list of terms and definitions used in the wiring diagrams.

LHD . . . . . Left Hand Drive Vehicles
RHD . . . . . Right Hand Drive Vehicles
ATX . . Automatic Transmissions-Front Wheel Drive
MTX . . . . Manual Transmissions-Front Wheel Drive
AT . . . . Automatic Transmissions-Rear Wheel Drive
MT . . . . . Manual Transmissions-Rear Wheel Drive
SOHC . . . . . Single Over Head Cam Engine
DOHC . . . . . Double Over Head Cam Engine
Built-Up-Export . . . . . Vehicles Built For Sale In Markets Other Than North America
Except-Built-Up-Export . . Vehicles Built For Sale In North America

WARNINGS - GENERAL

WARNINGS provide information to prevent personal injury and vehicle damage. Below is a list of general warnings that should be followed any time a vehicle is being serviced.

WARNING:: ALWAYS WEAR SAFETY GLASSES FOR EYE PROTECTION.

WARNING: USE SAFETY STANDS ANYTIME A PROCEDURE REQUIRES BEING UNDER A VEHICLE.

WARNING: BE SURE THAT THE IGNITION SWITCH ALWAYS IS IN THE OFF POSITION, UNLESS THE PROCEDURE REQUIRES IT TO BE ON.

WARNING: SET THE PARKING BRAKE WHEN WORKING ON ANY VEHICLE. AN AUTOMATIC TRANSMISSION SHOULD BE IN PARK. A MANUAL TRANSMISSION SHOULD BE IN NEUTRAL.

WARNING: OPERATE THE ENGINE ONLY IN A WELL-VENTILATED AREA.

WARNING: KEEP AWAY FROM MOVING PARTS WHEN THE ENGINE IS RUNNING, ESPECIALLY THE FAN AND BELTS.

WARNING: TO PREVENT SERIOUS BURNS, AVOID CONTACT WITH HOT PARTS SUCH AS THE RADIATOR, EXHAUST MANIFOLD(S), TAIL PIPE, CATALYTIC CONVERTER AND MUFFLER.

WARNING: DO NOT ALLOW FLAME OR SPARKS NEAR THE BATTERY. GASES ARE ALWAYS PRESENT IN AND AROUND THE BATTERY.

WARNING: ALWAYS REMOVE RINGS, WATCHES, LOOSE HANGING JEWELRY AND LOOSE CLOTHING.

DIAGNOSIS AND TESTING - WIRING HARNESS

TROUBLESHOOTING TOOLS

When diagnosing a problem in an electrical circuit there are several common tools necessary. These tools are listed and explained below.

- Jumper Wire - This is a test wire used to connect two points of a circuit. It can be used to bypass an open in a circuit.

WARNING: NEVER USE A JUMPER WIRE ACROSS A LOAD, SUCH AS A MOTOR, CONNECTED BETWEEN A BATTERY FEED AND GROUND.

- Voltmeter - Used to check for voltage on a circuit. Always connect the black lead to a known good ground and the red lead to the positive side of the circuit.

CAUTION: Most of the electrical components used in today's vehicles are Solid State. When checking voltages in these circuits, use a meter with a 10 - megohm or greater impedance rating.

- Ohmmeter - Used to check the resistance between two points of a circuit. Low or no resistance in a circuit means good continuity.

CAUTION: Most of the electrical components used in today's vehicles are Solid State. When checking resistance in these circuits use a meter with a 10 - megohm or greater impedance rating. In addition, make sure the power is disconnected from the circuit. Circuits that are powered up by the vehicle's electrical system can cause damage to the equipment and provide false readings.

WIRING DIAGRAM INFORMATION (Continued)

• Probing Tools - These tools are used for probing terminals in connectors (Fig. 4)Select the proper size tool from Special Tool Package 6807, and insert it into the terminal being tested. Use the other end of the tool to insert the meter probe.

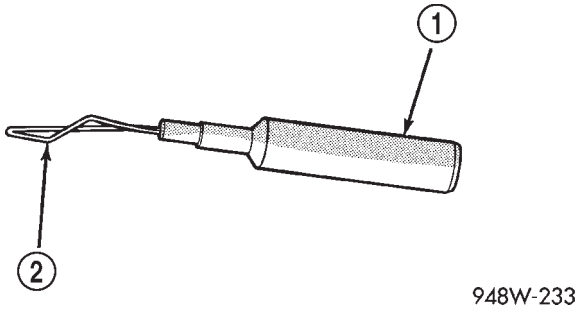

Fig. 4 PROBING TOOL

1 - SPECIAL TOOL 6801
2 - PROBING END

INTERMITTENT AND POOR CONNECTIONS

Most intermittent electrical problems are caused by faulty electrical connections or wiring. It is also possible for a sticking component or relay to cause a problem. Before condemning a component or wiring assembly, check the following items.

• Connectors are fully seated
• Spread terminals, or terminal push out
• Terminals in the wiring assembly are fully seated into the connector/component and locked into position
• Dirt or corrosion on the terminals. Any amount of corrosion or dirt could cause an intermittent problem
• Damaged connector/component casing exposing the item to dirt or moisture
• Wire insulation that has rubbed through causing a short to ground
• Some or all of the wiring strands broken inside of the insulation
• Wiring broken inside of the insulation

TROUBLESHOOTING WIRING PROBLEMS

When troubleshooting wiring problems there are six steps which can aid in the procedure. The steps are listed and explained below. Always check for non-factory items added to the vehicle before doing any diagnosis. If the vehicle is equipped with these items, disconnect them to verify these add-on items are not the cause of the problem.

(1) Verify the problem.
(2) Verify any related symptoms. Do this by performing operational checks on components that are in the same circuit. Refer to the wiring diagrams.
(3) Analyze the symptoms. Use the wiring diagrams to determine what the circuit is doing, where the problem most likely is occurring and where the diagnosis will continue.
(4) Isolate the problem area.
(5) Repair the problem area.
(6) Verify the proper operation. For this step, check for proper operation of all items on the repaired circuit. Refer to the wiring diagrams.

STANDARD PROCEDURE - TESTING FOR VOLTAGE POTENTIAL

(1) Connect the ground lead of a voltmeter to a known good ground (Fig. 5).
(2) Connect the other lead of the voltmeter to the selected test point. The vehicle ignition may need to be turned ON to check voltage. Refer to the appropriate test procedure.

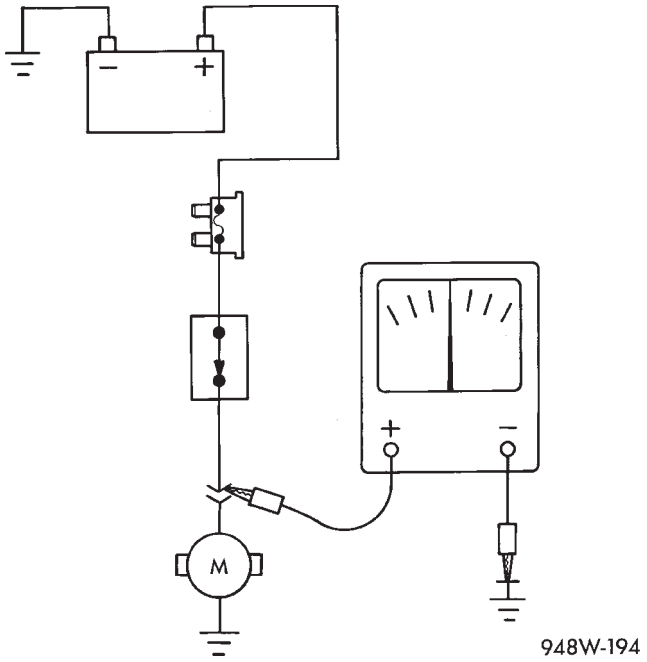

Fig. 5 Testing for Voltage Potential

WIRING DIAGRAM INFORMATION (Continued)

STANDARD PROCEDURE - TESTING FOR CONTINUITY

(1) Remove the fuse for the circuit being checked or, disconnect the battery.

(2) Connect one lead of the ohmmeter to one side of the circuit being tested (Fig. 6)

(3) Connect the other lead to the other end of the circuit being tested. Low or no resistance means good continuity.

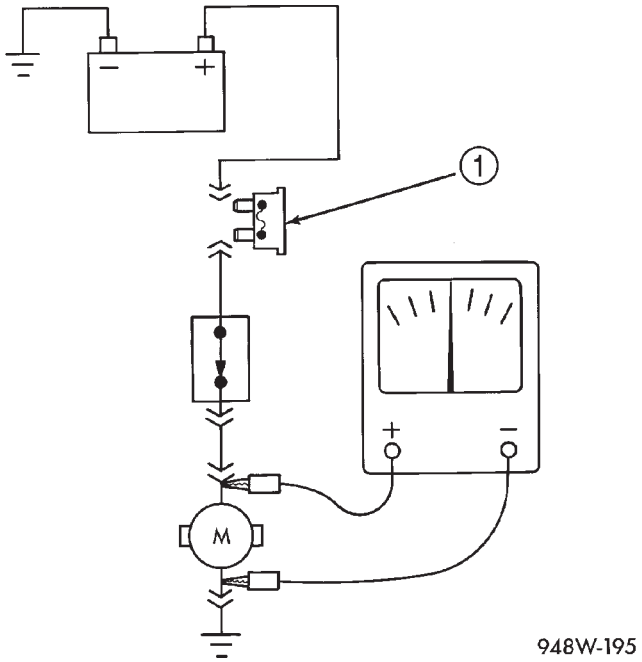

Fig. 6 Testing for Continuity

1 - FUSE REMOVED FROM CIRCUIT

STANDARD PROCEDURE - TESTING FOR A SHORT TO GROUND

(1) Remove the fuse and disconnect all items involved with the fuse.

(2) Connect a test light or a voltmeter across the terminals of the fuse.

(3) Starting at the fuse block, wiggle the wiring harness about six to eight inches apart and watch the voltmeter/test lamp.

(4) If the voltmeter registers voltage or the test lamp glows, there is a short to ground in that general area of the wiring harness.

STANDARD PROCEDURE - TESTING FOR SHORT TO GROUND ON FUSES POWERING SEVERAL LOADS

(1) Refer to the wiring diagrams and disconnect or isolate all items on the suspected fused circuits.

(2) Replace the blown fuse.

(3) Supply power to the fuse by turning ON the ignition switch or re-connecting the battery.

(4) Start connecting the items in the fuse circuit one at a time. When the fuse blows the circuit with the short to ground has been isolated.

STANDARD PROCEDURE - TESTING FOR A VOLTAGE DROP

(1) Connect the positive lead of the voltmeter to the side of the circuit closest to the battery (Fig. 7).

(2) Connect the other lead of the voltmeter to the other side of the switch or component.

(3) Operate the item.

(4) The voltmeter will show the difference in voltage between the two points.

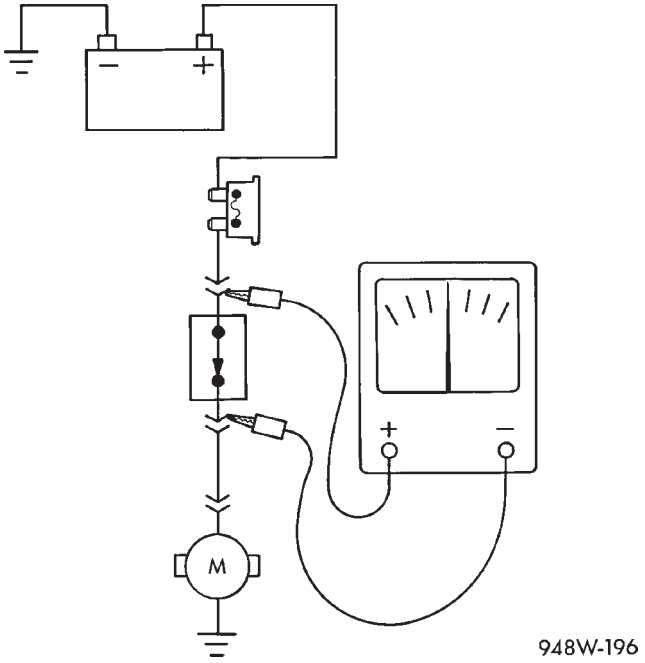

Fig. 7 Testing for Voltage Drop

WIRING DIAGRAM INFORMATION (Continued)

SPECIAL TOOLS

SPECIAL TOOLS - WIRING/TERMINAL

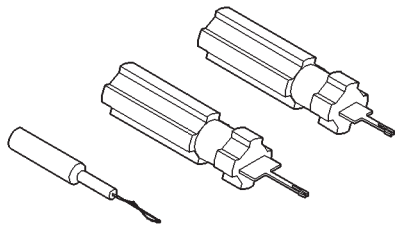

PROBING TOOL PACKAGE 6807

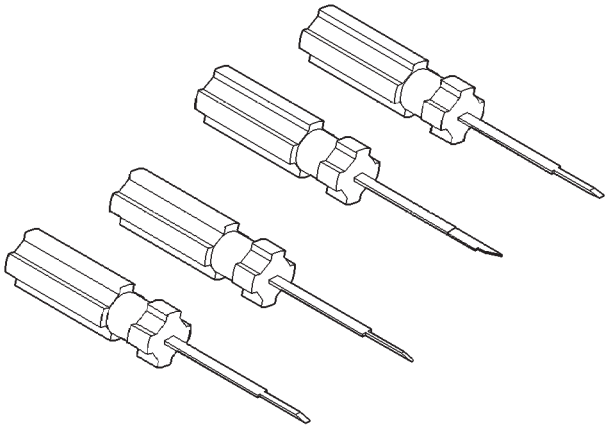

TERMINAL PICK 6680

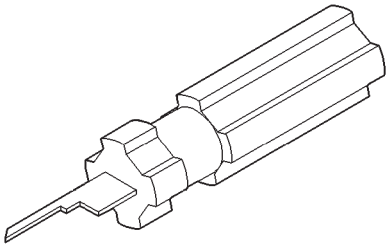

TERMINAL REMOVING TOOL 6932

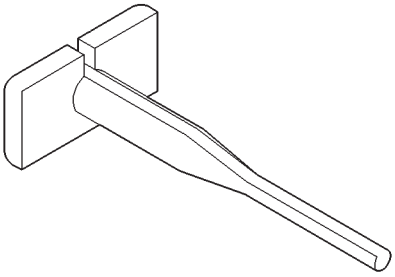

TERMINAL REMOVING TOOL 6934

CONNECTOR - AUGAT

REMOVAL

(1) Disconnect battery.

(2) Disconnect the connector from its mating half/component.

(3) Push down on the yellow connector locking tab to release the terminals (Fig. 8).

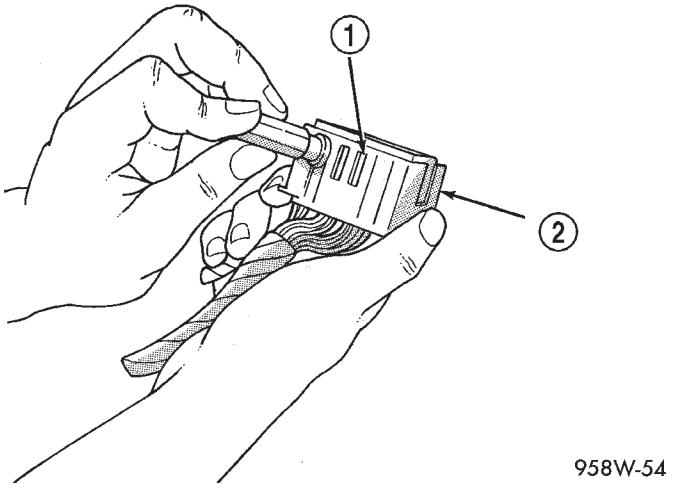

Fig. 8 AUGAT CONNECTOR REPAIR

1 - LOCKING TAB
2 - CONNECTOR

(4) Using special tool 6932, push the terminal to remove it from the connector (Fig. 9).

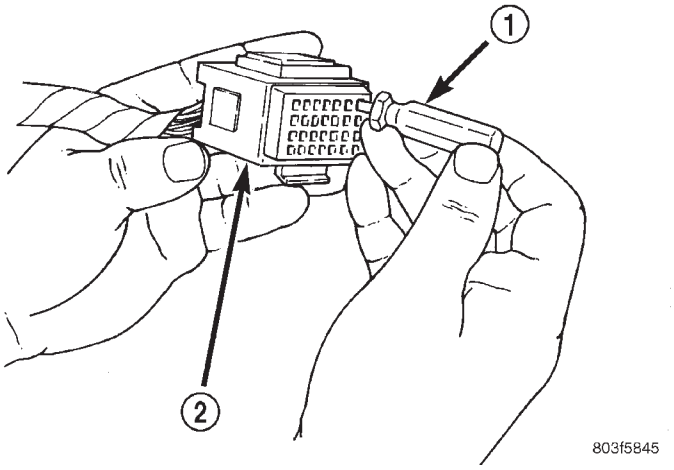

Fig. 9 USING

1 - SPECIAL TOOL 6932
2 - CONNECTOR

(5) Repair or replace the terminal as necessary.

CONNECTOR - AUGAT (Continued)

INSTALLATION

(1) Reset the terminal locking tang.
(2) Insert the removed wire in the same cavity on the repair connector.
(3) Repeat steps for each wire in the connector, being sure that all wires are inserted into the proper cavities. For additional connector pin-out identification, refer to the wiring diagrams.
(4) When the connector is re-assembled, the locking tab must be placed in the locked position to prevent terminal push out.
(5) Connect connector to its mating half/component.
(6) Connect battery and test all affected systems.

CONNECTOR - MOLEX

REMOVAL

(1) Disconnect battery.
(2) Disconnect the connector from its mating half/component.
(3) Insert special tool 6742 into the terminal end of the connector (Fig. 10).

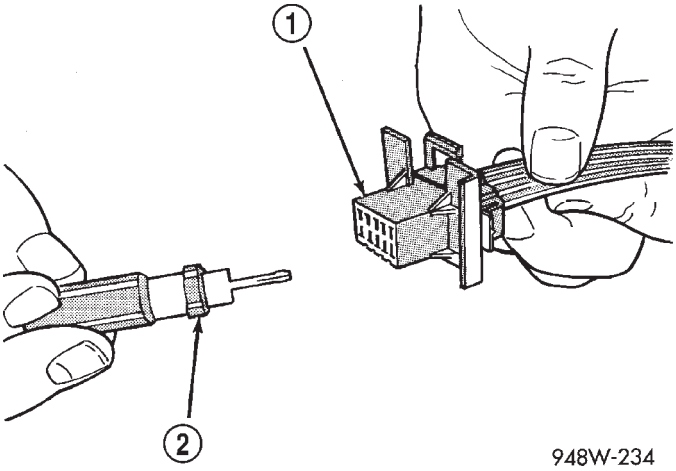

Fig. 10 MOLEX CONNECTOR REPAIR

1 - CONNECTOR
2 - SPECIAL TOOL 6742

(4) Using special tool 6742, release the locking fingers on the terminal (Fig. 11).
(5) Pull on the wire to remove it from the connector.
(6) Repair or replace the terminal as necessary.

INSTALLATION

(1) Reset the terminal locking tang.
(2) Insert the removed wire in the same cavity on the repair connector.
(3) Repeat steps for each wire in the connector, being sure that all wires are inserted into the proper cavities. For additional connector pin-out identification, refer to the wiring diagrams.

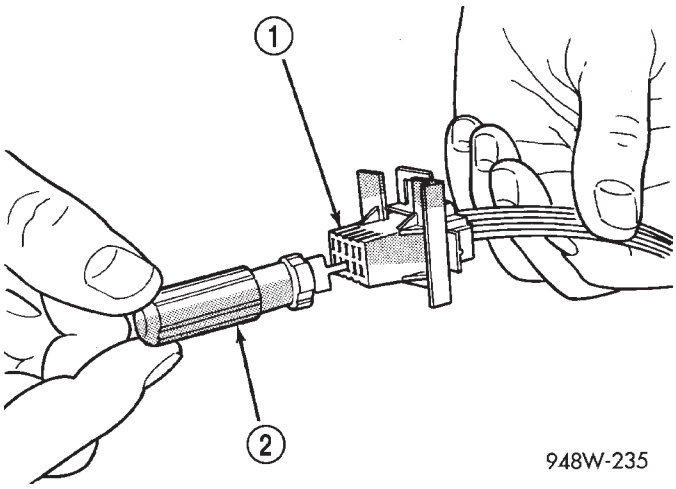

Fig. 11 USING SPECIAL TOOL 6742

1 - CONNECTOR
2 - SPECIAL TOOL 6742

(4) Connect connector to its mating half/component.
(5) Connect battery and test all affected systems.

CONNECTOR - THOMAS AND BETTS

REMOVAL

(1) Disconnect battery.
(2) Disconnect the connector from its mating half/component.
(3) Push in the two lock tabs on the side of the connector (Fig. 12).

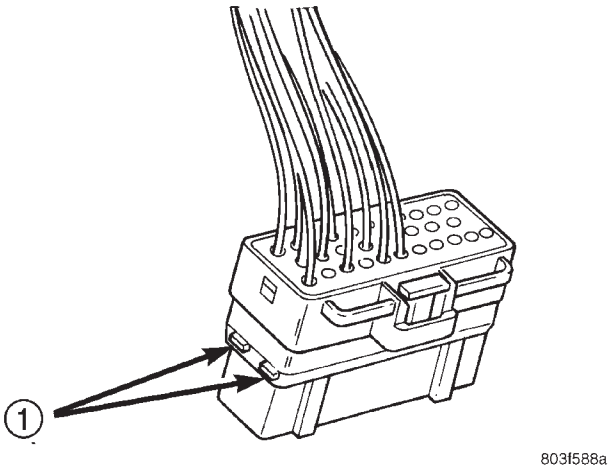

Fig. 12 THOMAS AND BETTS CONNECTOR LOCK RELEASE TABS

1 - LOCK TABS

CONNECTOR - THOMAS AND BETTS (Continued)

(4) Insert the probe end of special tool 6934 into the back of the connector cavity (Fig. 13).

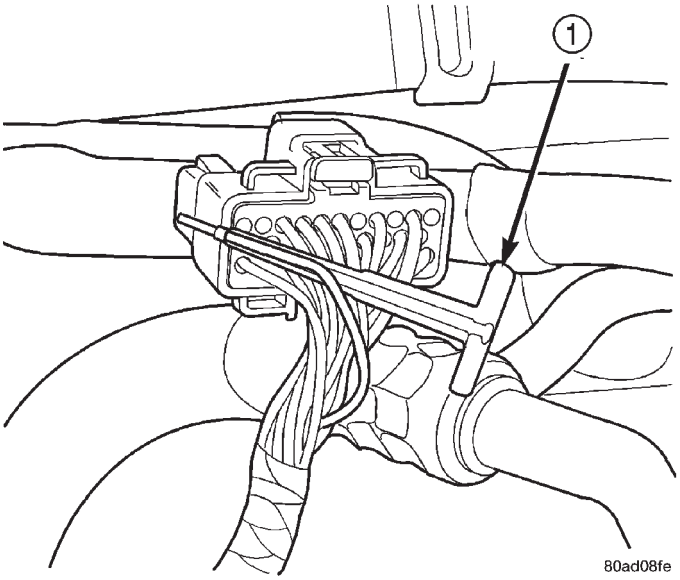

Fig. 13 REMOVING WIRE TERMINAL

1 - SPECIAL TOOL 6934

(5) Grasp the wire and tool 6934, then slowly remove the wire and terminal from the connector.

(6) Repair or replace the terminal as necessary.

INSTALLATION

(1) Reset the terminal locking tang.

(2) Insert the removed wire in the same cavity on the repair connector.

(3) Repeat steps for each wire in the connector, being sure that all wires are fully seated into the proper cavities. For additional connector pin-out identification, refer to the wiring diagrams.

(4) Push in the single lock tab on the side of the connector (Fig. 14).

(5) Connect connector to its mating half/component.

(6) Connect battery and test all affected systems.

DIODE

REMOVAL

(1) Disconnect the battery.

(2) Locate the diode in the harness, and remove the protective covering.

(3) Remove the diode from the harness, pay attention to the current flow direction (Fig. 15).

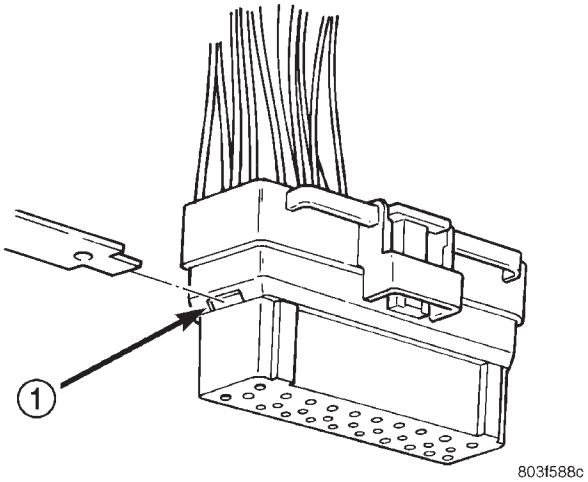

Fig. 14 SINGLE LOCK TAB

1 - SINGLE LOCK TAB

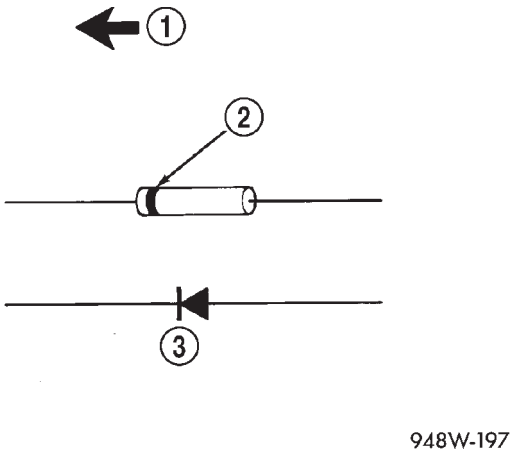

Fig. 15 DIODE IDENTIFICATION

1 - CURRENT FLOW
2 - BAND AROUND DIODE INDICATES CURRENT FLOW
3 - DIODE AS SHOWN IN THE DIAGRAMS

INSTALLATION

(1) Remove the insulation from the wires in the harness. Only remove enough insulation to solder in the new diode.

(2) Install the new diode in the harness, making sure current flow is correct. If necessary, refer to the appropriate wiring diagram for current flow (Fig. 15).

(3) Solder the connection together using rosin core type solder only. **Do not use acid core solder.**

(4) Tape the diode to the harness using electrical tape. Make sure the diode is completely sealed from the elements.

(5) Re-connect the battery and test affected systems.

TERMINAL

REMOVAL

(1) Disconnect battery.

(2) Disconnect the connector being repaired from its mating half/component.

(3) Remove the connector locking wedge, if required (Fig. 16).

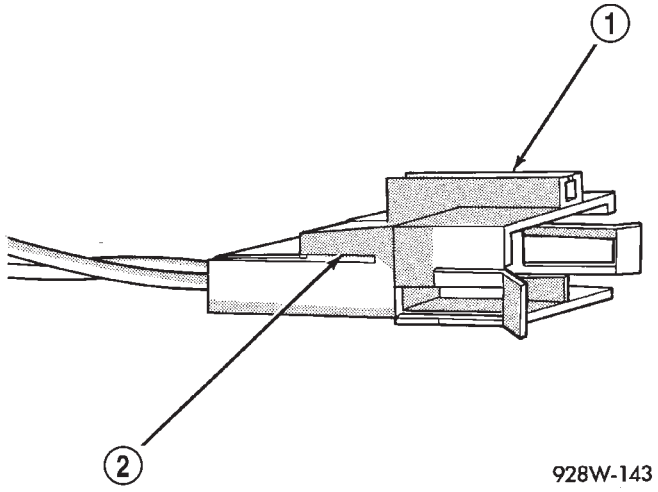

Fig. 16 CONNECTOR LOCKING WEDGE TAB (TYPICAL)

1 - CONNECTOR
2 - CONNECTOR LOCKING WEDGE TAB

(4) Position the connector locking finger away from the terminal using the proper pick from special tool kit 6680. Pull on the wire to remove the terminal from the connector (Fig. 17) (Fig. 18).

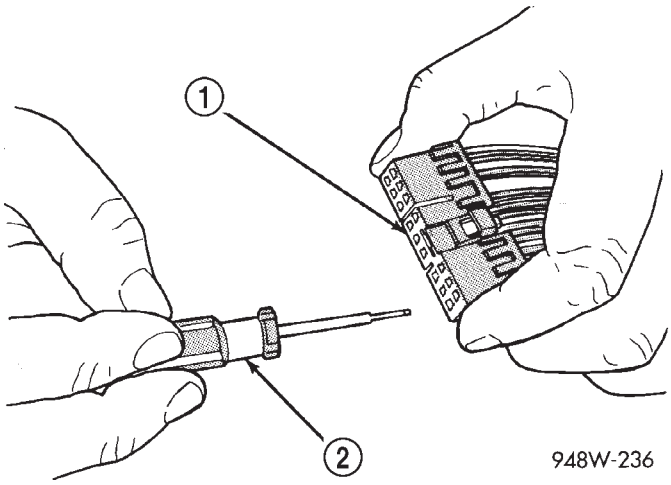

Fig. 17 TERMINAL REMOVAL

1 - CONNECTOR
2 - FROM SPECIAL TOOL KIT 6680

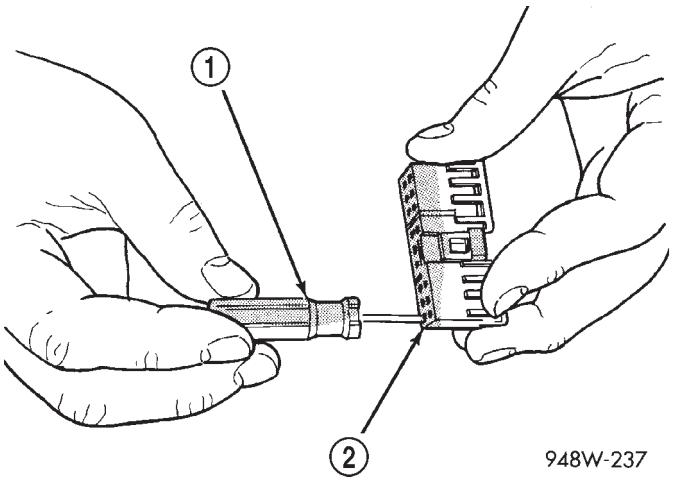

Fig. 18 TERMINAL REMOVAL USING SPECIAL TOOL

1 - FROM SPECIAL TOOL KIT 6680
2 - CONNECTOR

(5) Cut the wire 6 inches from the back of the connector.

INSTALLATION

(1) Select a wire from the terminal repair assembly that best matches the color wire being repaired.

(2) Cut the repair wire to the proper length and remove one–half (1/2) inch of insulation.

(3) Splice the repair wire to the wire harness .

(4) Insert the repaired wire into the connector.

(5) Install the connector locking wedge, if required, and reconnect the connector to its mating half/component.

(6) Re-tape the wire harness starting at 1–1/2 inches behind the connector and 2 inches past the repair.

(7) Connect battery and test all affected systems.

WIRE

STANDARD PROCEDURE - WIRE SPLICING

When splicing a wire, it is important that the correct gage be used as shown in the wiring diagrams.

(1) Remove one-half (1/2) inch of insulation from each wire that needs to be spliced.

(2) Place a piece of adhesive lined heat shrink tubing on one side of the wire. Make sure the tubing will be long enough to cover and seal the entire repair area.

(3) Place the strands of wire overlapping each other inside of the splice clip (Fig. 19).

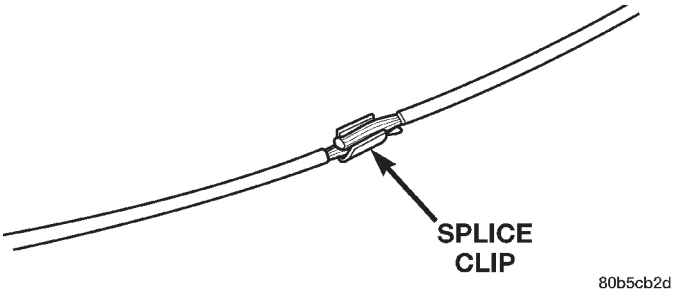

Fig. 19 SPLICE CLIP

(4) Using crimping tool, Miller p/n 8272, crimp the splice clip and wires together (Fig. 20)

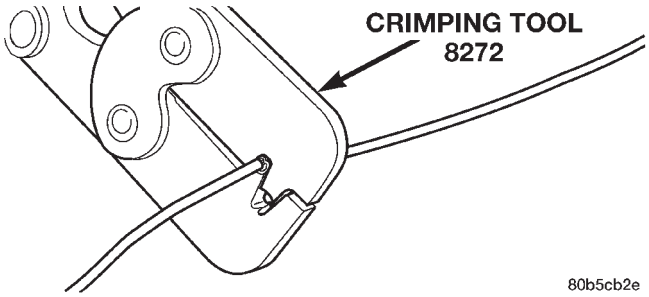

Fig. 20 CRIMPING TOOL

(5) Solder the connection together using rosin core type solder only (Fig. 21).

CAUTION: DO NOT USE ACID CORE SOLDER.

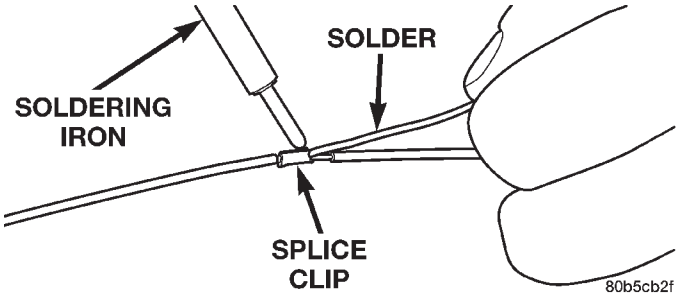

Fig. 21 SOLDER

(6) Center the heat shrink tubing over the joint and heat using a heat gun. Heat the joint until the tubing is tightly sealed and sealant comes out of both ends of the tubing (Fig. 22).

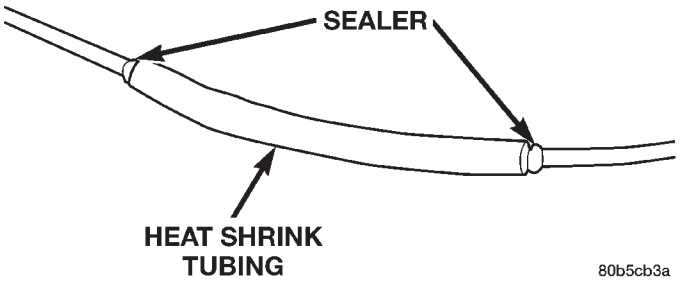

Fig. 22 HEAT SHRINK TUBING

8W-02 COMPONENT INDEX

Component	Page
A/C Compressor Clutch Relay	8Wa-42
A/C Compressor Clutch	8Wa-42
A/C- Heater Control Switch	8Wa-42
A/C Low Pressure Switch	8Wa-42
A/C Pressure Transducer	8Wa-42
Ambient Temperature Sensor	8Wa-49
Automatic Shut Down Relay	8Wa-30
Back-Up Lamp Switch	8Wa-51
Back-Up Lamps	8Wa-51
Battery	8Wa-20
Blower Motor Resistor Block	8Wa-42
Blower Motor	8Wa-42
Brake Lamp Switch	8Wa-30
Brake Transmission Shift Interlock Solenoid	8Wa-31
Brake Warning Indicator Switch	8Wa-30
Camshaft Position Sensor	8Wa-30
Cargo Lamp	8Wa-44
Center High Mounted Stop Lamp	8Wa-51
Center Stack Lamp	8Wa-44
Cigar Lighter	8Wa-41
Clockspring	8Wa-33, 41, 43
Clutch Pedal Position Switch	8Wa-30
Controller Antilock Brake	8Wa-35
Crankshaft Position Sensor	8Wa-30
Data Link Connector	8Wa-18
Diode	8Wa-42
Dome Lamp	8Wa-44
Dome Lamp/Intrusion Sensor	8Wa-44
Door Ajar Switches	8Wa-40
Door Power Lock Motors	8Wa-61
Driver Airbag Module	8Wa-43
Driver Cylinder Lock Switch	8Wa-61
Driver Door Lock Motor	8Wa-61
Driver Door Lock Switch	8Wa-61
Driver Door Power Lock Motor/Ajar Switch	8Wa-61
Driver Heated Seat Back	8Wa-63
Driver Heated Seat Cushion	8Wa-63
Driver Heated Seat Module	8Wa-63
Driver Heated Seat Switch	8Wa-63
Driver Seat Belt Switch	8Wa-40
EGR Solenoid	8Wa-30
Engine Coolant Temperature Sensor	8Wa-30
Engine Oil Pressure Switch	8Wa-30
Engine Starter Motor Relay	8Wa-21
Engine Starter Motor	8Wa-21
Evap Purge Solenoid	8Wa-30
Fog Lamps	8Wa-50, 51
Front Power Window Switch	8Wa-60
Front Washer Pump Motor	8Wa-53
Front Wiper Motor	8Wa-53
Front Wiper/Washer Switch	8Wa-53
Fuel Injectors	8Wa-30
Fuel Pump Module	8Wa-30
Fuel Pump Relay	8Wa-30
Fuse Block	8Wa-11
Fusible Link	8Wa-20
Grounds	8Wa-15
Generator	8Wa-20
Headlamp Leveling Switch	8Wa-50
Headlamp Relay	8Wa-50
Headlamp Switch	8Wa-50, 51
Heated Seat Relay	8Wa-63
High Beam Headlamps	8Wa-50
High Note Horn	8Wa-41
High Speed Radiator Fan Relay	8Wa-42
Hood Ajar Switch	8Wa-39
Horn Relay	8Wa-41
Horn Switch	8Wa-41
Idle Air Control Motor	8Wa-30
Ignition Coil	8Wa-30
Ignition Switch	8Wa-10
Indicator Drivers	8Wa-40
Inlet Air Temperature Sensor	8Wa-30
Input Speed Sensor	8Wa-31
Instrument Cluster	8Wa-40
Instrument Panel Speakers	8Wa-47
Knock Sensor	8Wa-30
Lavalier Modules	8Wa-50
Leak Detection Pump	8Wa-30
License Lamps	8Wa-51
Liftgate Ajar Switch	8Wa-40
Liftgate Cylinder Lock Switch	8Wa-61
Liftgate Power Lock Motor	8Wa-61
Low Beam Headlamps	8Wa-50
Low Note Horn	8Wa-41
Low Speed Radiator Fan Relay	8Wa-42
Manifold Absolute Pressure Sensor	8Wa-30
Map/Reading Lamps	8Wa-44
Multi-Function Switch	8Wa-52
Noise Suppressor	8Wa-30
Occupant Restraint Controller	8Wa-43
Output Speed Sensor	8Wa-31
Overhead Console Module	8Wa-49
Oxygen Sensors	8Wa-30
Park/Turn Signal Lamps	8Wa-50, 52
Parking Brake Switch	8Wa-40
Passenger Airbag	8Wa-43
Passenger Cylinder Lock Switch	8Wa-61
Passenger Door Lock Motor	8Wa-61
Passenger Door Lock Switch	8Wa-61
Passenger Door Power Lock Motor/Ajar Switch	8Wa-61
Passenger Heated Seat Back	8Wa-63

Component	Page
Passenger Heated Seat Cushion	8Wa-63
Passenger Heated Seat Module	8Wa-63
Passenger Heated Seat Switch	8Wa-63
Passenger Seat Belt Switch	8Wa-40
Power Distribution Center	8Wa-10
Power Mirror Switch	8Wa-62
Power Mirrors	8Wa-62, 62-5
Power Outlet	8Wa-41
Power Seat Motor	8Wa-63
Power Seat Switch	8Wa-63
Power Steering Pressure Switch	8Wa-30
Power Sunroof Module	8Wa-64
Power Window Motors	8Wa-60
Power Window Switches	8Wa-60
Powertrain Control Module	8Wa-30
Radiator Fan Motor	8Wa-42
Radio	8Wa-47
Rear Power Outlet	8Wa-41
Rear Power Window Switch	8Wa-60
Rear Window Defogger Switch	8Wa-48
Rear Window Defogger	8Wa-48
Rear Wiper Motor	8Wa-53
Rear Wiper Switch	8Wa-53
Remote Keyless Entry Antenna	8Wa-39
Remote Keyless Entry Module	8Wa-39
Splice Information	8Wa-70
Seat Airbags	8Wa-43
Seat Belt Tensioners	8Wa-43
Sentry Key Immobilizer Module	8Wa-39
Side Impact Airbag Control Modules	8Wa-43
Side Markers	8Wa-52
Siren	8Wa-39
Speakers	8Wa-47
Speed Control Servo	8Wa-33
Stop Lamp	8Wa-51
Sunroof Motor	8Wa-64
Sunroof Switch	8Wa-64
Tail Lamp	8Wa-51
Tail/Stop Lamps	8Wa-51
Throttle Position Sensor	8Wa-30
Traction Control Switch	8Wa-35
Transmission Control Module	8Wa-31
Transmission Control Relay	8Wa-31
Transmission Range Indicator Illumination	8Wa-44
Transmission Range Sensor	8Wa-31
Transmission Solenoid/Pressure Switch Assembly	8Wa-31
Turn Signal Indicators	8Wa-52
Turn Signal Lamps	8Wa-52
Vehicle Speed Control Switch	8Wa-33
Vehicle Speed Sensor	8Wa-30
Visor/Vanity Lamps	8Wa-44

8W-10 POWER DISTRIBUTION

Component	Page
A/C Compressor Clutch	8Wa-10-11
A/C Compressor Clutch Relay	8Wa-10-6, 11
Automatic Shut Down Relay	8Wa-10-12
Battery	8Wa-10-6
Brake Lamp Switch	8Wa-10-6, 11
Cargo Lamp	8Wa-10-15
Center High Mounted Stop Lamp	8Wa-10-11
Cigar Lighter	8Wa-10-18
Circuit Breaker No. 1 (FB)	8Wa-10-10
Circuit Breaker No. 2 (FB)	8Wa-10-19
Controller Antilock Brake	8Wa-10-6, 8, 9, 11
Data Link Connector	8Wa-10-12
Diode	8Wa-10-11
Dome Lamp	8Wa-10-15
Dome Lamp/Intrusion Sensor	8Wa-10-15
EGR Solenoid	8Wa-10-13
Engine Starter Motor	8Wa-10-6, 8, 18
Engine Starter Motor Relay	8Wa-10-8, 18, 19
Fuel Injector No. 1	8Wa-10-13
Fuel Injector No. 2	8Wa-10-13
Fuel Injector No. 3	8Wa-10-13
Fuel Injector No. 4	8Wa-10-13
Fuel Pump Module	8Wa-10-12
Fuel Pump Relay	8Wa-10-12
Fuse 1 (FB)	8Wa-10-10
Fuse 1 (PDC)	8Wa-10-6, 8, 18
Fuse 2 (FB)	8Wa-10-10
Fuse 2 (PDC)	8Wa-10-6, 8
Fuse 3 (FB)	8Wa-10-10
Fuse 3 (PDC)	8Wa-10-6, 8, 18
Fuse 4 (FB)	8Wa-10-8
Fuse 4 (PDC)	8Wa-10-6, 8
Fuse 5 (FB)	8Wa-10-19
Fuse 5 (PDC)	8Wa-10-6, 9
Fuse 6 (FB)	8Wa-10-19
Fuse 6 (PDC)	8Wa-10-6, 9
Fuse 7 (FB)	8Wa-10-19
Fuse 7 (PDC)	8Wa-10-6, 9
Fuse 8 (FB)	8Wa-10-17
Fuse 8 (PDC)	8Wa-10-6, 10
Fuse 9 (FB)	8Wa-10-20
Fuse 10 (FB)	8Wa-10-20
Fuse 10 (PDC)	8Wa-10-6, 10
Fuse 11 (FB)	8Wa-10-20
Fuse 11 (PDC)	8Wa-10-6, 11
Fuse 12 (FB)	8Wa-10-20
Fuse 12 (PDC)	8Wa-10-6, 7, 11
Fuse 13 (FB)	8Wa-10-20
Fuse 13 (PDC)	8Wa-10-6, 7, 12
Fuse 14 (FB)	8Wa-10-20
Fuse 14 (PDC)	8Wa-10-7, 14
Fuse 15 (FB)	8Wa-10-20
Fuse 15 (PDC)	8Wa-10-7, 14
Fuse 17 (FB)	8Wa-10-8
Fuse 18 (FB)	8Wa-10-10
Fuse 18 (PDC)	8Wa-10-7, 15
Fuse 19 (PDC)	8Wa-10-7, 16
Fuse 20 (PDC)	8Wa-10-7, 16, 18
Fuse 22 (PDC)	8Wa-10-7, 17
Fuse Block	8Wa-10-6, 8, 10, 17, 19, 20
Fusible Link	8Wa-10-6
Generator	8Wa-10-6, 13
Headlamp Relay	8Wa-10-17
Headlamp Switch	8Wa-10-7, 17
Heated Seat Relay	8Wa-10-6, 8
High Note Horn	8Wa-10-14
High Speed Radiator Fan Relay	8Wa-10-9
Horn Relay	8Wa-10-14
Ignition Coil	8Wa-10-13
Ignition Switch	8Wa-10-6, 7, 8, 16, 18, 19, 20
Instrument Cluster	8Wa-10-15, 17, 18
Left Power Mirror	8Wa-10-10
Left Rear Fog Lamp	8Wa-10-17
Left Tail/Stop Lamp	8Wa-10-11
Left Visor/Vanity Lamp	8Wa-10-15
Low Note Horn	8Wa-10-14
Low Speed Radiator Fan Relay	8Wa-10-9
Map/Reading Lamps	8Wa-10-15
Multi- Function Switch	8Wa-10-7, 16
Noise Suppressor	8Wa-10-13
Overhead Console Module	8Wa-10-15
Oxygen Sensor 1/1 Upstream	8Wa-10-13
Oxygen Sensor 1/2 Downstream	8Wa-10-13
Power Distribution Center	8Wa-10-2, 6, 7, 8, 9, 10, 11, 12, 14, 15, 16, 17, 18
Power Mirror Switch	8Wa-10-15
Power Outlet	8Wa-10-16, 18
Power Seat Motor	8Wa-10-9
Power Seat Switch	8Wa-10-6
Power Seat Switch	8Wa-10-9
Powertrain Control Module	8Wa-10-12, 13
Radiator Fan Motor	8Wa-10-9
Radio	8Wa-10-15, 18
Rear Window Defogger	8Wa-10-10
Rear Window Defogger Switch	8Wa-10-6, 10
Right Power Mirror	8Wa-10-10
Right Rear Fog Lamp	8Wa-10-17
Right Tail/Stop Lamp	8Wa-10-11
Right Visor/Vanity Lamp	8Wa-10-15
Sentry Key Immobilizer Module	8Wa-10-15
Siren	8Wa-10-15
Transmission Control Module	8Wa-10-14, 19
Transmission Control Relay	8Wa-10-14
Transmission Solenoid/Pressure Switch Assembly	8Wa-10-14

POWER DISTRIBUTION CENTER

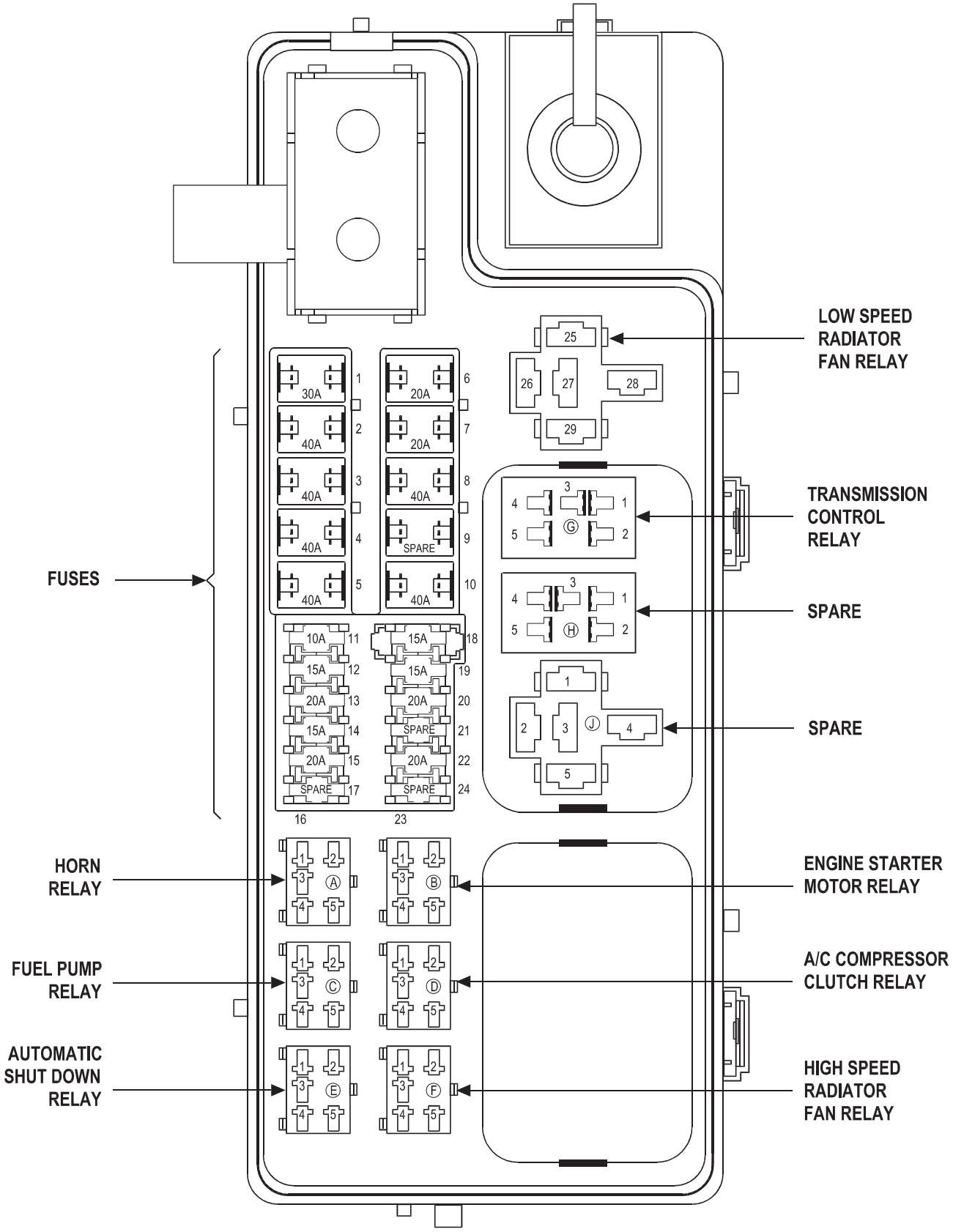

FUSES

FUSE	AMPS	FUSED CIRCUIT	FUNCTION
1	30A	A1 14RD	FUSED B(+)
2	40A	A10 12RD/DG □	FUSED B(+)
3	40A	A2 12PK/BK	FUSED B(+)
4	40A	A35 12DB △ ###	FUSED B(+)
5	40A	A16 12GY	FUSED B(+)
6	20A	A120 16RD/LB ##	FUSED B(+)
6	20A	A120 16RD/LG ● ###	FUSED B(+)
6	20A	A120 16RD/LB ●● ###	FUSED B(+)
7	20A	A20 12RD/DB □	FUSED B(+)
8	40A	A4 12BK/PK	FUSED B(+)
9	-	-	-
10	40A	A3 12RD/WT	FUSED B(+)
11	10A	A17 20RD/BK	FUSED B(+)
12	15A	F32 18PK/DB	FUSED B(+)
13	20A	A14 18RD/WT	FUSED B(+)
14	15A	F62 20RD	FUSED B(+)
15	20A	A30 16RD/WT ■■	FUSED B(+)
16	-	-	-
17	-	-	-
18	15A	M1 20PK	FUSED B(+)
19	15A	A15 18PK/DG	FUSED B(+)
20	20A	F1 16DB/BK	FUSED B(+)
21	-	-	-
22	20A	F39 18PK/LG ▲▲	FUSED B(+)
23	-	-	-
24	-	-	-

□ ABS
● LHD
●● RHD
■■ A/T

△ HEATED SEATS
▲▲ BUILT-UP-EXPORT
EARLY BUILD
NORMAL BUILD

RELAYS

A/C COMPRESSOR CLUTCH RELAY

CAVITY	CIRCUIT	FUNCTION
D1	C3 20DB/BK	A/C COMPRESSOR CLUTCH RELAY OUTPUT
D2	C28 20DB/OR	A/C COMPRESSOR CLUTCH RELAY CONTROL
D3	-	-
D4	F18 20LG/BK	FUSED IGNITION SWITCH OUTPUT (RUN-START)
D5	A17 20RD/BK	FUSED B(+)

AUTOMATIC SHUT DOWN RELAY

CAVITY	CIRCUIT	FUNCTION
E1	A142 18DG/OR	AUTOMATIC SHUT DOWN RELAY OUTPUT
E2	K51 20DB/YL	AUTOMATIC SHUT DOWN RELAY CONTROL
E3	-	-
E4	A14 18RD/WT	FUSED B(+)
E5	A14 18RD/WT	FUSED B(+)

ENGINE STARTER MOTOR RELAY

CAVITY	CIRCUIT	FUNCTION
B1	T40 14BR	ENGINE STARTER MOTOR RELAY OUTPUT
B2	K90 20TN	ENGINE STARTER MOTOR RELAY CONTROL
B3	-	-
B4	A41 14YL	FUSED IGNITION SWITCH OUTPUT (START)
B5	A1 14RD	FUSED B(+)

FUEL PUMP RELAY

CAVITY	CIRCUIT	FUNCTION
C1	A141 16DG/WT	FUEL PUMP RELAY OUTPUT
C2	K31 20BR	FUEL PUMP RELAY CONTROL
C3	-	-
C4	F12 20DB/WT	FUSED IGNITION SWITCH OUTPUT (RUN-START)
C5	A14 18RD/WT	FUSED B(+)

RELAYS

HIGH SPEED RADIATOR FAN RELAY

CAVITY	CIRCUIT	FUNCTION
F1	C25 12YL	HIGH SPEED RADIATOR FAN RELAY OUTPUT
F2	C27 20DB/PK	HIGH SPEED RADIATOR FAN RELAY CONTROL
F3	-	-
F4	F18 20LG/BK	FUSED IGNITION SWITCH OUTPUT (RUN-START)
F5	A16 12GY	FUSED B(+)

HORN RELAY

CAVITY	CIRCUIT	FUNCTION
A1	X2 20DG/RD	HORN RELAY OUTPUT
A2	X3 20BK/RD	HORN RELAY CONTROL
A3	-	-
A4	F62 20RD	FUSED B(+)
A5	F62 20RD	FUSED B(+)

LOW SPEED RADIATOR FAN RELAY

CAVITY	CIRCUIT	FUNCTION
25	F18 20LG/BK	FUSED IGNITION SWITCH OUTPUT (RUN-START)
26	C23 12DG	LOW SPEED RADIATOR FAN RELAY OUTPUT
27	-	-
28	A16 12GY	FUSED B(+)
29	C24 20YL/RD	LOW SPEED RADIATOR FAN RELAY CONTROL

TRANSMISSION CONTROL RELAY

CAVITY	CIRCUIT	FUNCTION
G1	T16 16RD	TRANSMISSION CONTROL RELAY OUTPUT
G2	Z1 20BK	GROUND
G3	-	-
G4	T15 20LG	TRANSMISSION CONTROL RELAY CONTROL
G5	A30 16RD/WT	FUSED B(+)

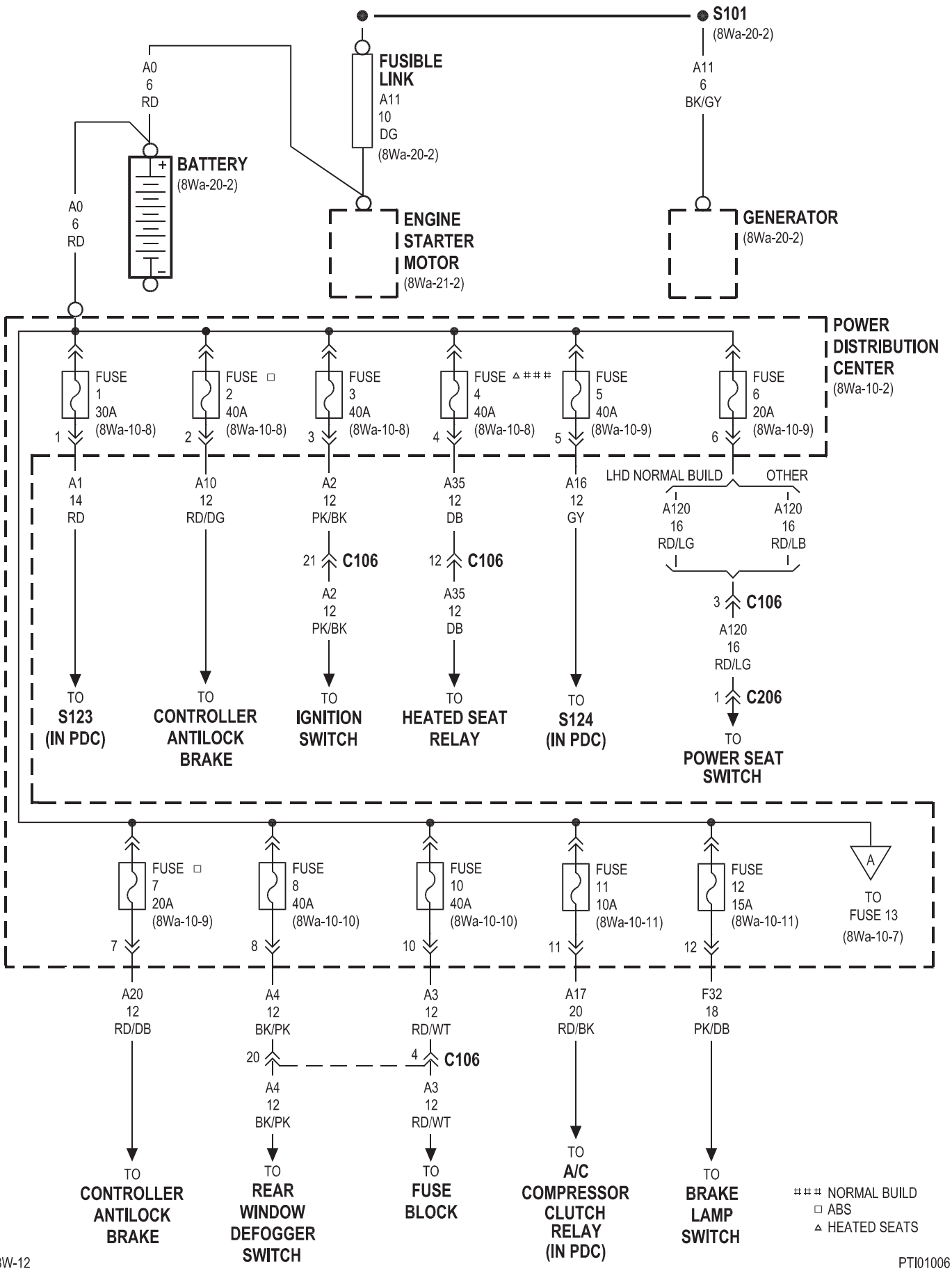
S101
(8Wa-20-2)
A11
6
BK/GY
FUSIBLE LINK
A11
10
DG
(8Wa-20-2)
A0
6
RD
BATTERY
(8Wa-20-2)
A0
6
RD
ENGINE STARTER MOTOR
(8Wa-21-2)
GENERATOR
(8Wa-20-2)
POWER DISTRIBUTION CENTER
(8Wa-10-2)
FUSE 1 30A (8Wa-10-8)
FUSE 2 40A (8Wa-10-8)
FUSE 3 40A (8Wa-10-8)
FUSE 4 40A (8Wa-10-8)
FUSE 5 40A (8Wa-10-9)
FUSE 6 20A (8Wa-10-9)
A1 14 RD
A10 12 RD/DG
A2 12 PK/BK
A35 12 DB
A16 12 GY
LHD NORMAL BUILD
OTHER
A120 16 RD/LG
A120 16 RD/LB
21 C106
12 C106
3 C106
A2 12 PK/BK
A35 12 DB
A120 16 RD/LG
1 C206
TO S123 (IN PDC)
TO CONTROLLER ANTILOCK BRAKE
TO IGNITION SWITCH
TO HEATED SEAT RELAY
TO S124 (IN PDC)
TO POWER SEAT SWITCH
FUSE 7 20A (8Wa-10-9)
FUSE 8 40A (8Wa-10-10)
FUSE 10 40A (8Wa-10-10)
FUSE 11 10A (8Wa-10-11)
FUSE 12 15A (8Wa-10-11)
A
TO FUSE 13 (8Wa-10-7)
A20 12 RD/DB
A4 12 BK/PK
A3 12 RD/WT
A17 20 RD/BK
F32 18 PK/DB
20 C106 4
A4 12 BK/PK
A3 12 RD/WT
TO CONTROLLER ANTILOCK BRAKE
TO REAR WINDOW DEFOGGER SWITCH
TO FUSE BLOCK
TO A/C COMPRESSOR CLUTCH RELAY (IN PDC)
TO BRAKE LAMP SWITCH
NORMAL BUILD
□ ABS
△ HEATED SEATS

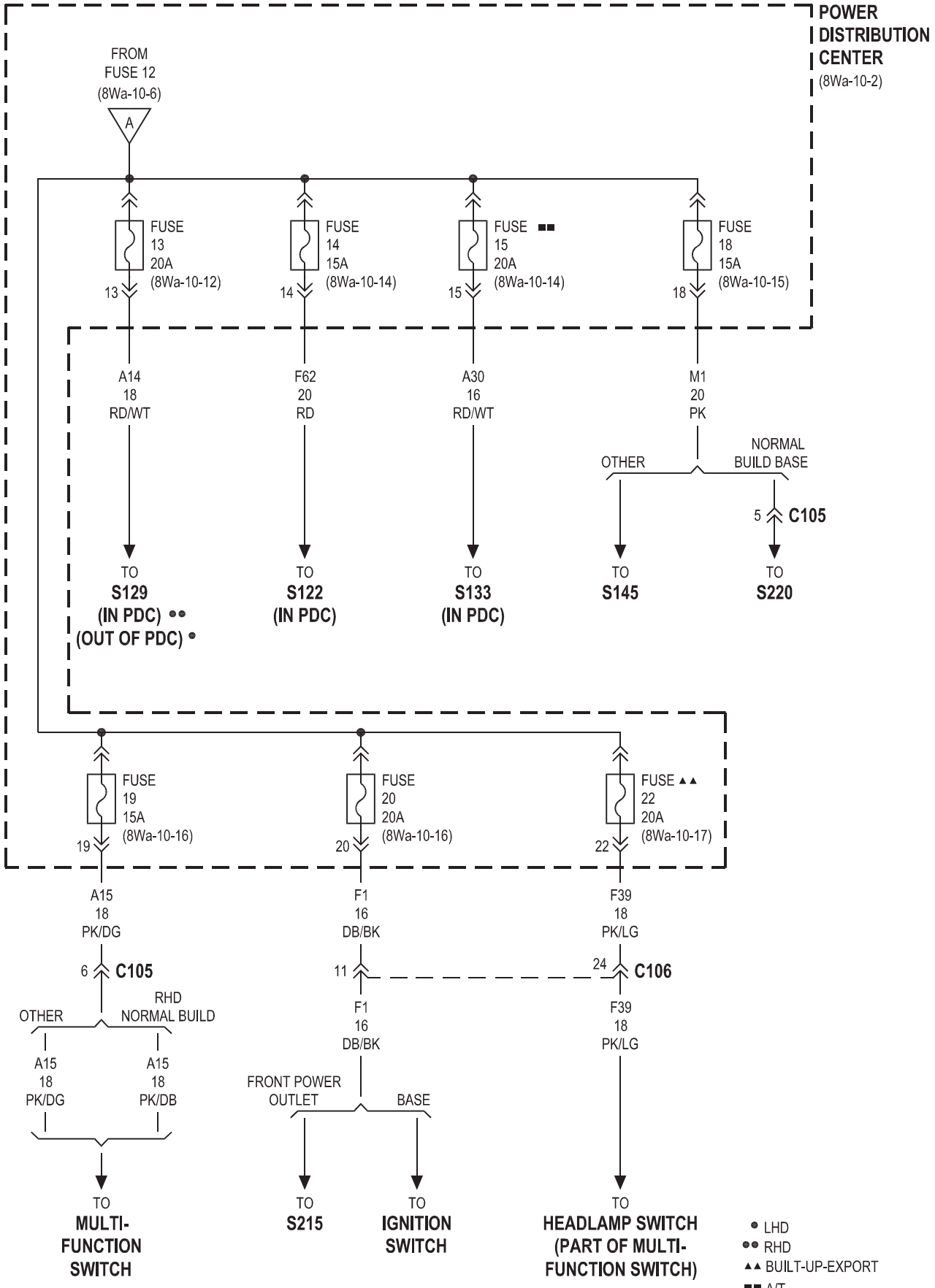
POWER DISTRIBUTION CENTER
(8Wa-10-2)
FROM FUSE 12 (8Wa-10-6)
A
FUSE 13 20A (8Wa-10-12)
13
FUSE 14 15A (8Wa-10-14)
14
FUSE ■■ 15 20A (8Wa-10-14)
15
FUSE 18 15A (8Wa-10-15)
18
A14 18 RD/WT
F62 20 RD
A30 16 RD/WT
M1 20 PK
OTHER
NORMAL BUILD BASE
5
C105
TO S129 (IN PDC) ●● (OUT OF PDC) ●
TO S122 (IN PDC)
TO S133 (IN PDC)
TO S145
TO S220
FUSE 19 15A (8Wa-10-16)
19
FUSE 20 20A (8Wa-10-16)
20
FUSE ▲▲ 22 20A (8Wa-10-17)
22
A15 18 PK/DG
F1 16 DB/BK
F39 18 PK/LG
6
C105
11
24
C106
OTHER
RHD NORMAL BUILD
A15 18 PK/DG
A15 18 PK/DB
F1 16 DB/BK
F39 18 PK/LG
FRONT POWER OUTLET
BASE
TO MULTI-FUNCTION SWITCH
TO S215
TO IGNITION SWITCH
TO HEADLAMP SWITCH (PART OF MULTI-FUNCTION SWITCH)
● LHD
●● RHD
▲▲ BUILT-UP-EXPORT
■■ A/T

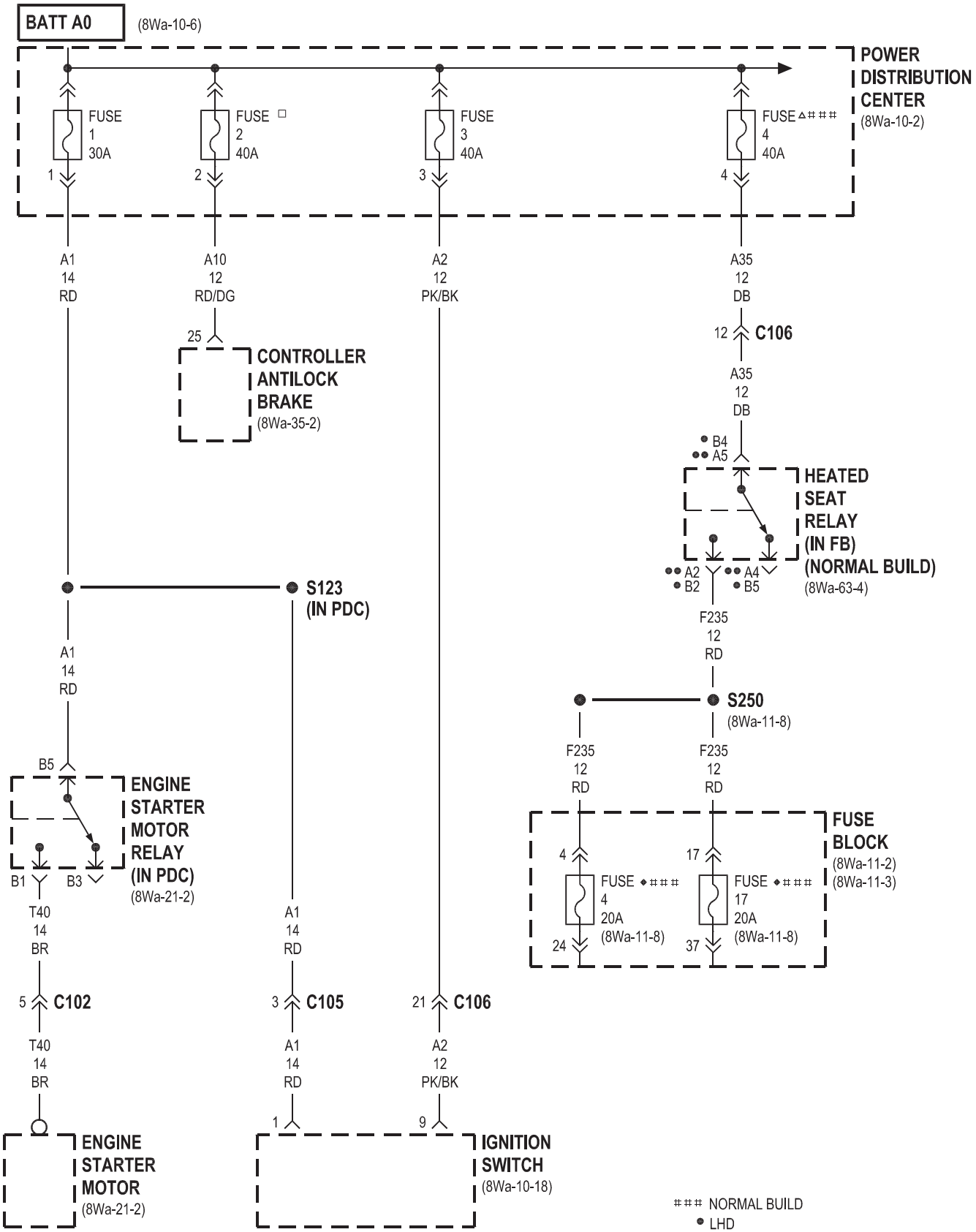
BATT A0
(8Wa-10-6)
POWER DISTRIBUTION CENTER
(8Wa-10-2)
FUSE 1 30A
FUSE 2 40A
FUSE 3 40A
FUSE 4 40A
A1 14 RD
A10 12 RD/DG
A2 12 PK/BK
A35 12 DB
C106
CONTROLLER ANTILOCK BRAKE
(8Wa-35-2)
HEATED SEAT RELAY (IN FB) (NORMAL BUILD)
(8Wa-63-4)
S123 (IN PDC)
F235 12 RD
S250
(8Wa-11-8)
ENGINE STARTER MOTOR RELAY (IN PDC)
(8Wa-21-2)
FUSE BLOCK
(8Wa-11-2)
(8Wa-11-3)
FUSE 4 20A (8Wa-11-8)
FUSE 17 20A (8Wa-11-8)
T40 14 BR
C102
C105
ENGINE STARTER MOTOR
(8Wa-21-2)
IGNITION SWITCH
(8Wa-10-18)
NORMAL BUILD
LHD
RHD
ABS
POWER MIRRORS/POWER WINDOWS
HEATED SEATS

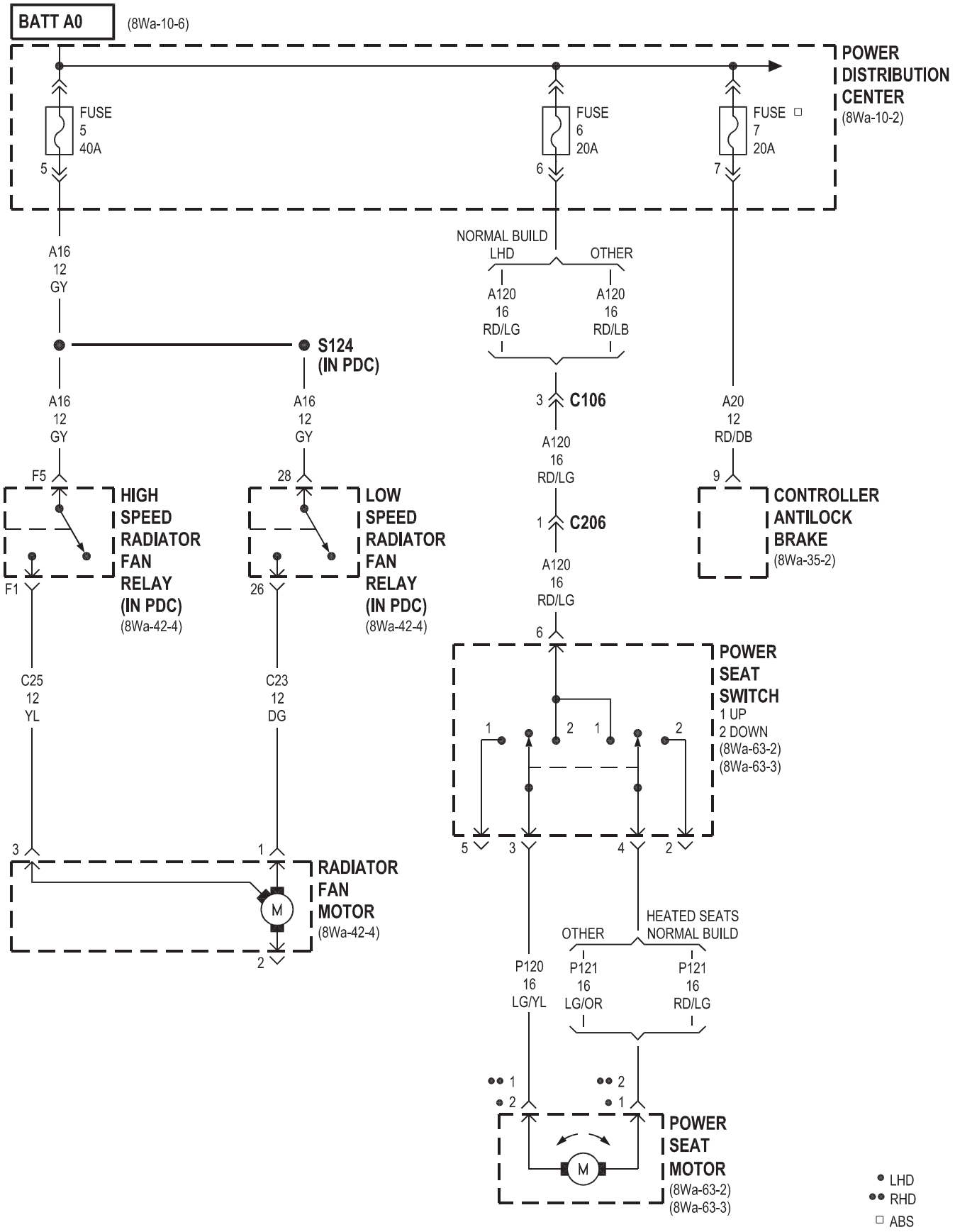
BATT A0
(8Wa-10-6)
POWER DISTRIBUTION CENTER
(8Wa-10-2)
FUSE 5 40A
FUSE 6 20A
FUSE 7 20A
5
6
7
A16 12 GY
NORMAL BUILD
LHD
OTHER
A120 16 RD/LG
A120 16 RD/LB
S124 (IN PDC)
3
C106
A16 12 GY
A16 12 GY
A120 16 RD/LG
A20 12 RD/DB
F5
28
9
HIGH SPEED RADIATOR FAN RELAY (IN PDC)
(8Wa-42-4)
LOW SPEED RADIATOR FAN RELAY (IN PDC)
(8Wa-42-4)
1
C206
CONTROLLER ANTILOCK BRAKE
(8Wa-35-2)
F1
26
A120 16 RD/LG
6
POWER SEAT SWITCH
1 UP
2 DOWN
(8Wa-63-2)
(8Wa-63-3)
C25 12 YL
C23 12 DG
5
3
4
2
3
1
RADIATOR FAN MOTOR
(8Wa-42-4)
M
2
HEATED SEATS
OTHER
NORMAL BUILD
P120 16 LG/YL
P121 16 LG/OR
P121 16 RD/LG
POWER SEAT MOTOR
(8Wa-63-2)
(8Wa-63-3)
LHD
RHD
ABS

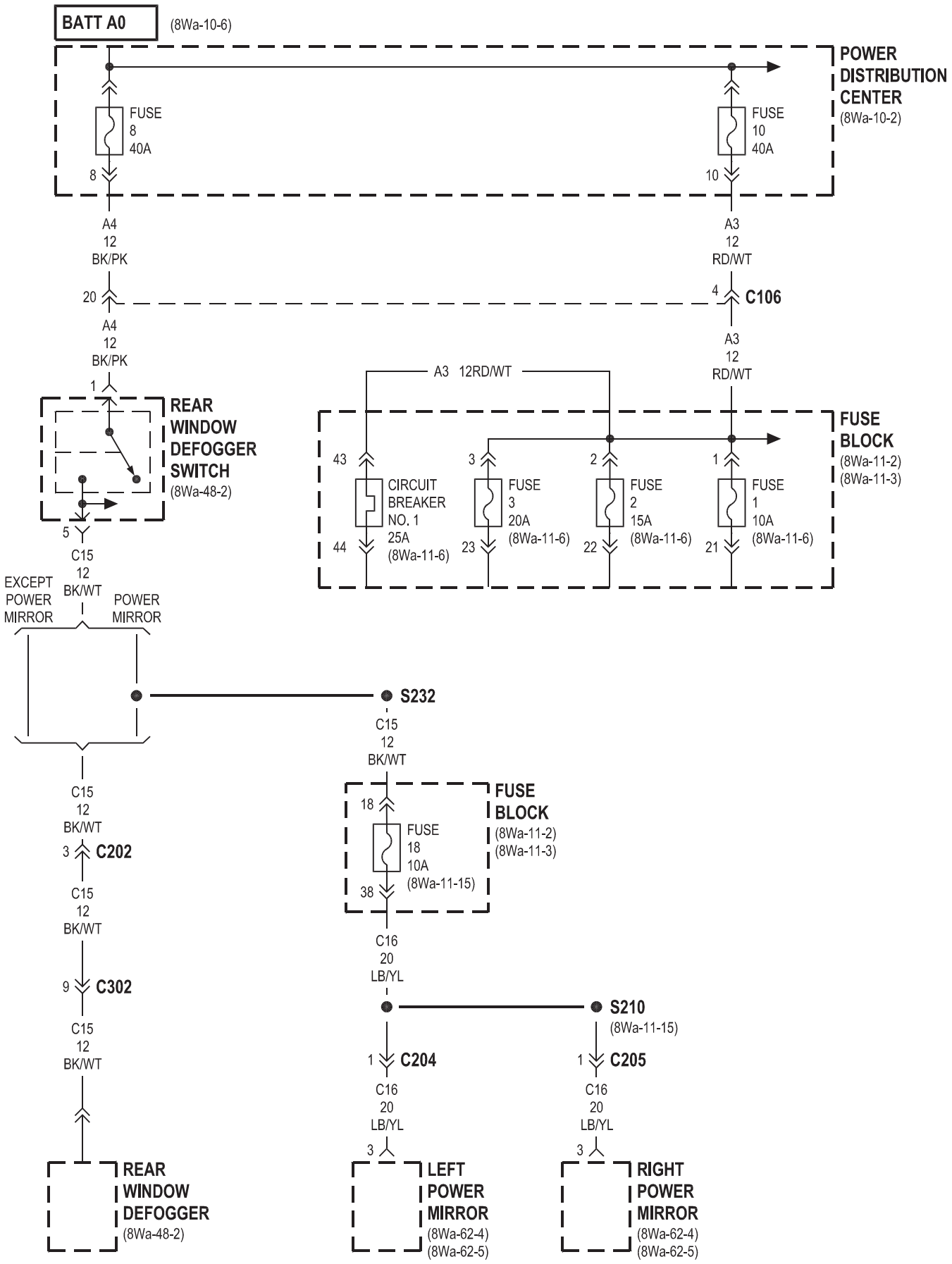
BATT A0
(8Wa-10-6)
POWER DISTRIBUTION CENTER
(8Wa-10-2)
FUSE 8 40A
FUSE 10 40A
8
10
A4 12 BK/PK
A3 12 RD/WT
20
4
C106
A4 12 BK/PK
A3 12 RD/WT
1
A3 12RD/WT
REAR WINDOW DEFOGGER SWITCH
(8Wa-48-2)
FUSE BLOCK
(8Wa-11-2)
(8Wa-11-3)
43
3
2
1
CIRCUIT BREAKER NO. 1 25A
(8Wa-11-6)
FUSE 3 20A
(8Wa-11-6)
FUSE 2 15A
(8Wa-11-6)
FUSE 1 10A
(8Wa-11-6)
44
23
22
21
5
C15 12 BK/WT
EXCEPT POWER MIRROR
POWER MIRROR
S232
C15 12 BK/WT
FUSE BLOCK
(8Wa-11-2)
(8Wa-11-3)
18
FUSE 18 10A
(8Wa-11-15)
38
C15 12 BK/WT
3
C202
C15 12 BK/WT
9
C302
C15 12 BK/WT
C16 20 LB/YL
S210
(8Wa-11-15)
1
C204
1
C205
C16 20 LB/YL
C16 20 LB/YL
3
3
REAR WINDOW DEFOGGER
(8Wa-48-2)
LEFT POWER MIRROR
(8Wa-62-4)
(8Wa-62-5)
RIGHT POWER MIRROR
(8Wa-62-4)
(8Wa-62-5)

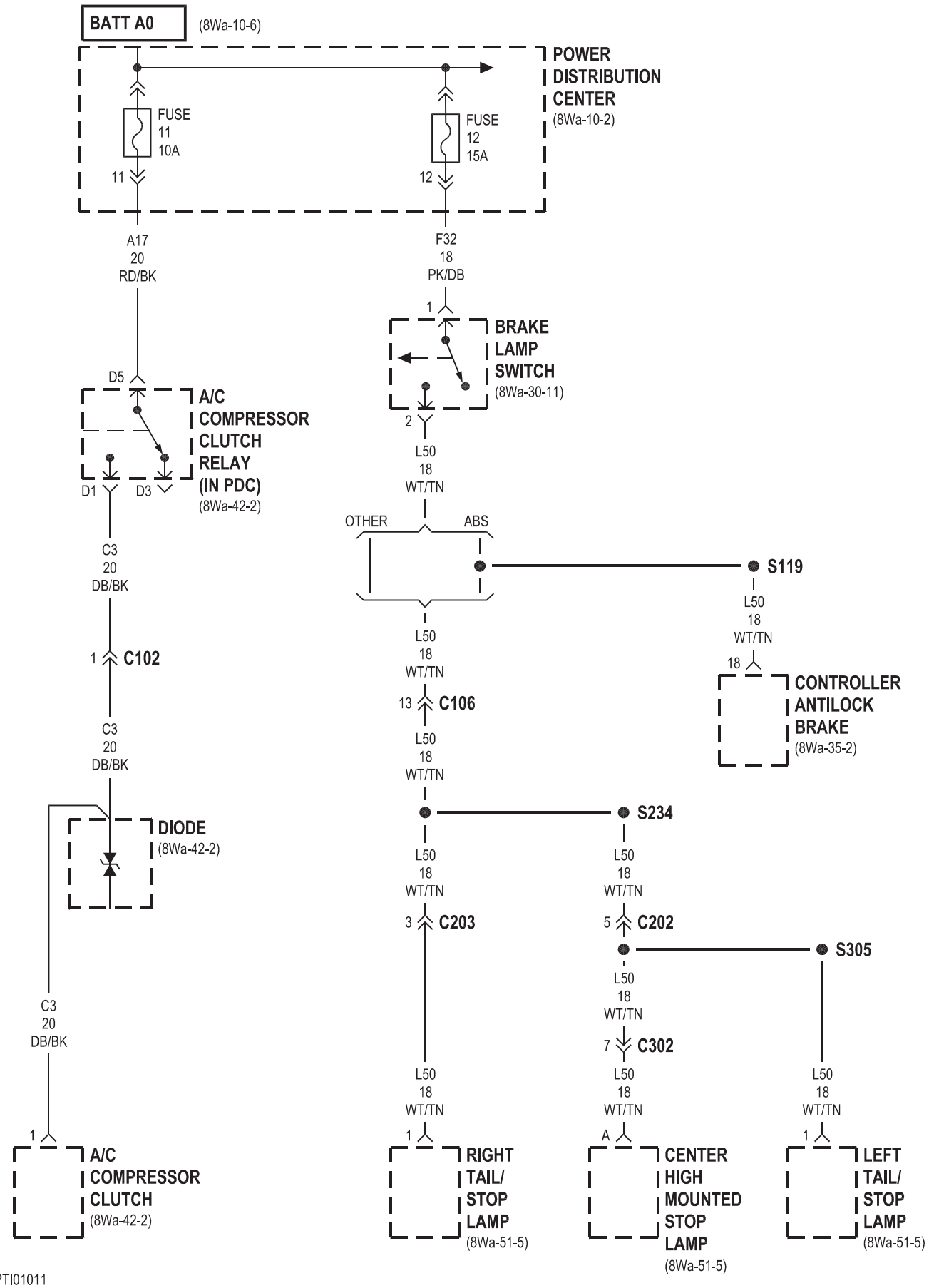
BATT A0
(8Wa-10-6)
POWER DISTRIBUTION CENTER
(8Wa-10-2)
FUSE 11 10A
FUSE 12 15A
11
12
A17 20 RD/BK
F32 18 PK/DB
1
BRAKE LAMP SWITCH
(8Wa-30-11)
2
D5
A/C COMPRESSOR CLUTCH RELAY (IN PDC)
(8Wa-42-2)
D1
D3
L50 18 WT/TN
OTHER
ABS
S119
L50 18 WT/TN
18
CONTROLLER ANTILOCK BRAKE
(8Wa-35-2)
C3 20 DB/BK
1
C102
L50 18 WT/TN
13
C106
C3 20 DB/BK
L50 18 WT/TN
S234
DIODE
(8Wa-42-2)
L50 18 WT/TN
L50 18 WT/TN
3
C203
5
C202
S305
L50 18 WT/TN
7
C302
C3 20 DB/BK
L50 18 WT/TN
L50 18 WT/TN
L50 18 WT/TN
1
A/C COMPRESSOR CLUTCH
(8Wa-42-2)
1
RIGHT TAIL/ STOP LAMP
(8Wa-51-5)
A
CENTER HIGH MOUNTED STOP LAMP
(8Wa-51-5)
1
LEFT TAIL/ STOP LAMP
(8Wa-51-5)

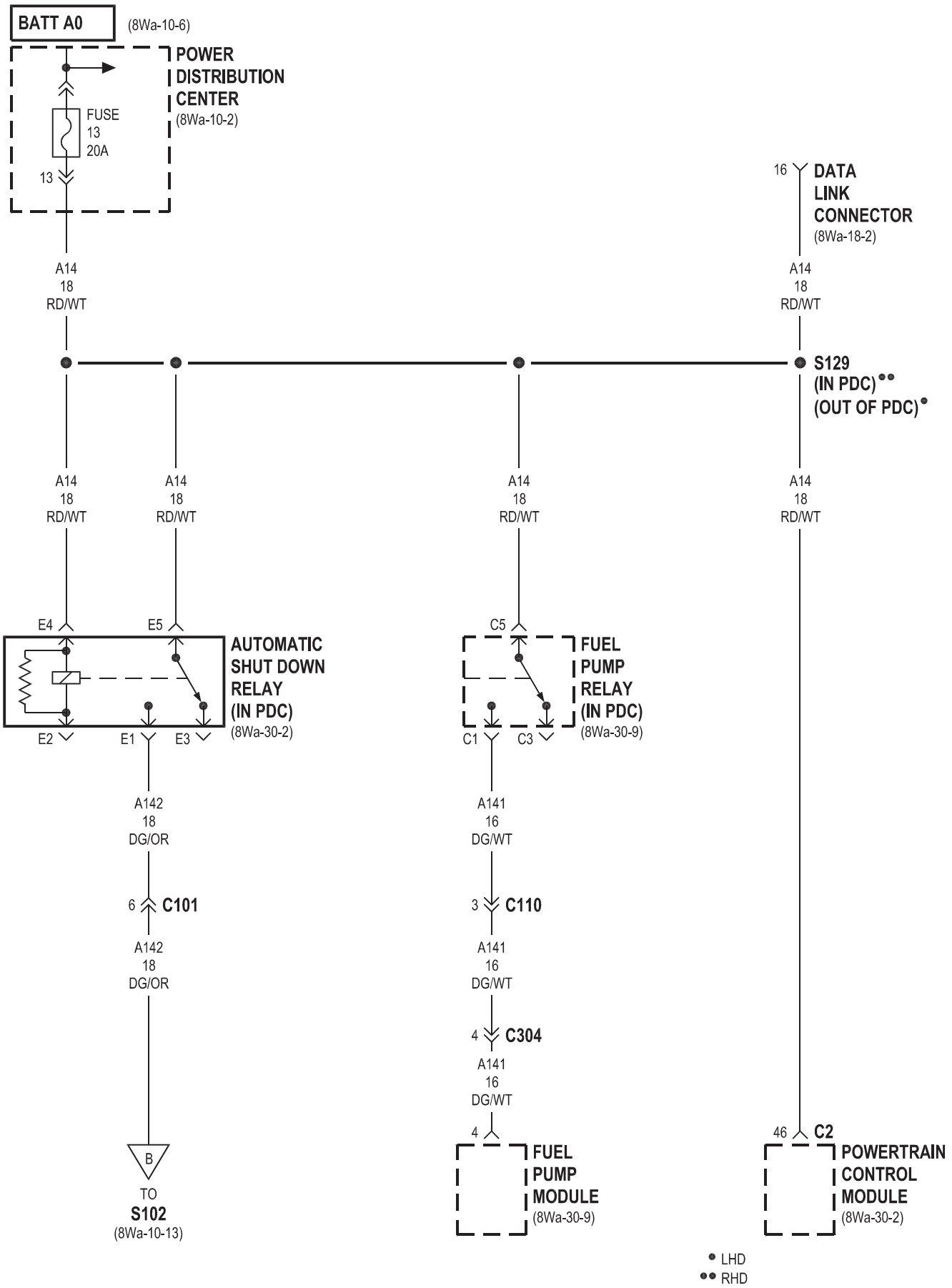
BATT A0
(8Wa-10-6)
POWER DISTRIBUTION CENTER
(8Wa-10-2)
FUSE 13 20A
13
A14 18 RD/WT
16
DATA LINK CONNECTOR
(8Wa-18-2)
A14 18 RD/WT
S129
(IN PDC)••
(OUT OF PDC)•
A14 18 RD/WT
A14 18 RD/WT
A14 18 RD/WT
A14 18 RD/WT
E4
E5
AUTOMATIC SHUT DOWN RELAY
(IN PDC)
(8Wa-30-2)
E2
E1
E3
C5
FUEL PUMP RELAY
(IN PDC)
(8Wa-30-9)
C1
C3
A142 18 DG/OR
A141 16 DG/WT
6
C101
3
C110
A142 18 DG/OR
A141 16 DG/WT
4
C304
A141 16 DG/WT
B
TO
S102
(8Wa-10-13)
4
FUEL PUMP MODULE
(8Wa-30-9)
46
C2
POWERTRAIN CONTROL MODULE
(8Wa-30-2)
• LHD
•• RHD

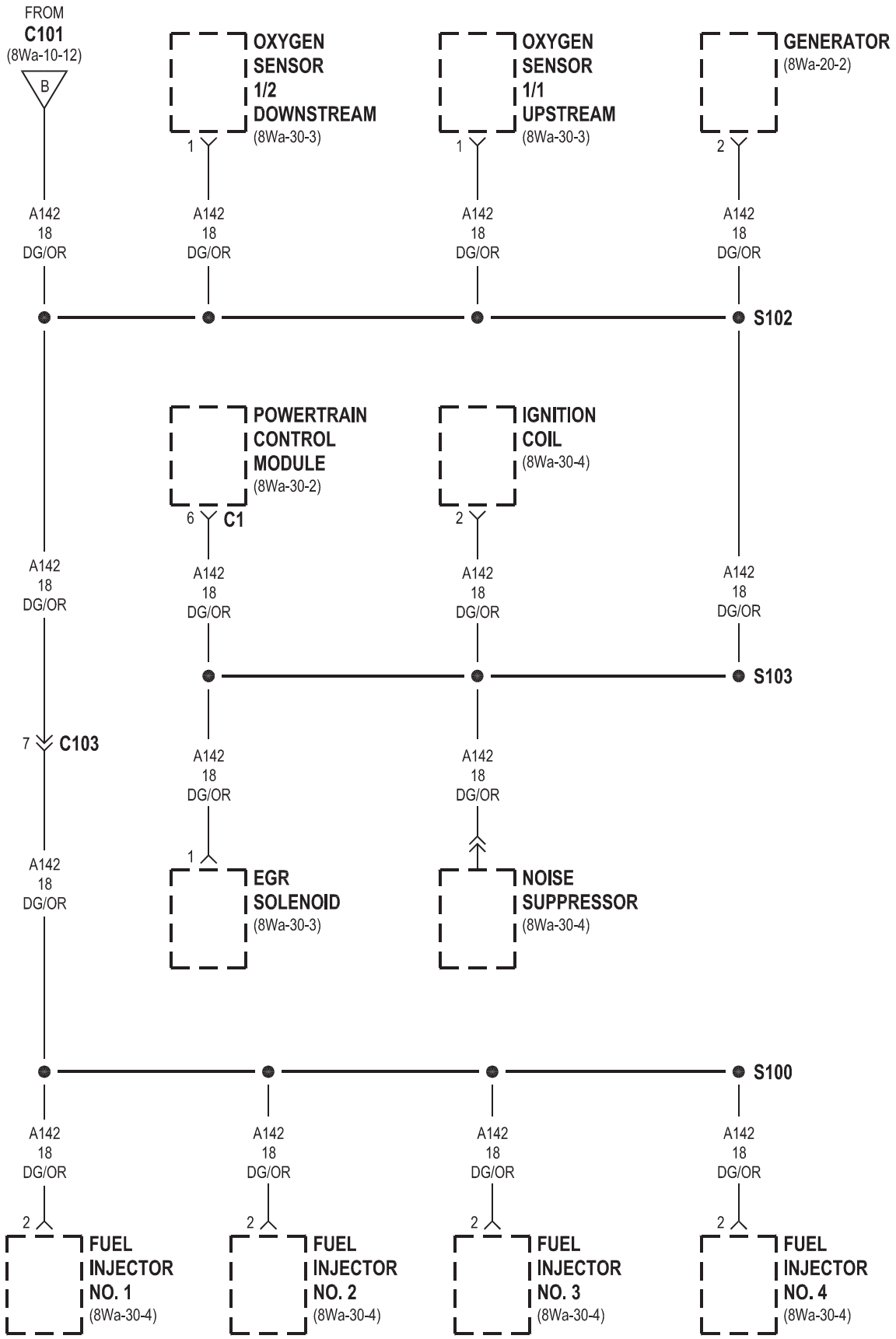
FROM
C101
(8Wa-10-12)
B
OXYGEN SENSOR 1/2 DOWNSTREAM
(8Wa-30-3)
OXYGEN SENSOR 1/1 UPSTREAM
(8Wa-30-3)
GENERATOR
(8Wa-20-2)
1
1
2
A142
18
DG/OR
S102
POWERTRAIN CONTROL MODULE
(8Wa-30-2)
6
C1
IGNITION COIL
(8Wa-30-4)
2
S103
7
C103
1
EGR SOLENOID
(8Wa-30-3)
NOISE SUPPRESSOR
(8Wa-30-4)
S100
2
FUEL INJECTOR NO. 1
(8Wa-30-4)
FUEL INJECTOR NO. 2
(8Wa-30-4)
FUEL INJECTOR NO. 3
(8Wa-30-4)
FUEL INJECTOR NO. 4
(8Wa-30-4)

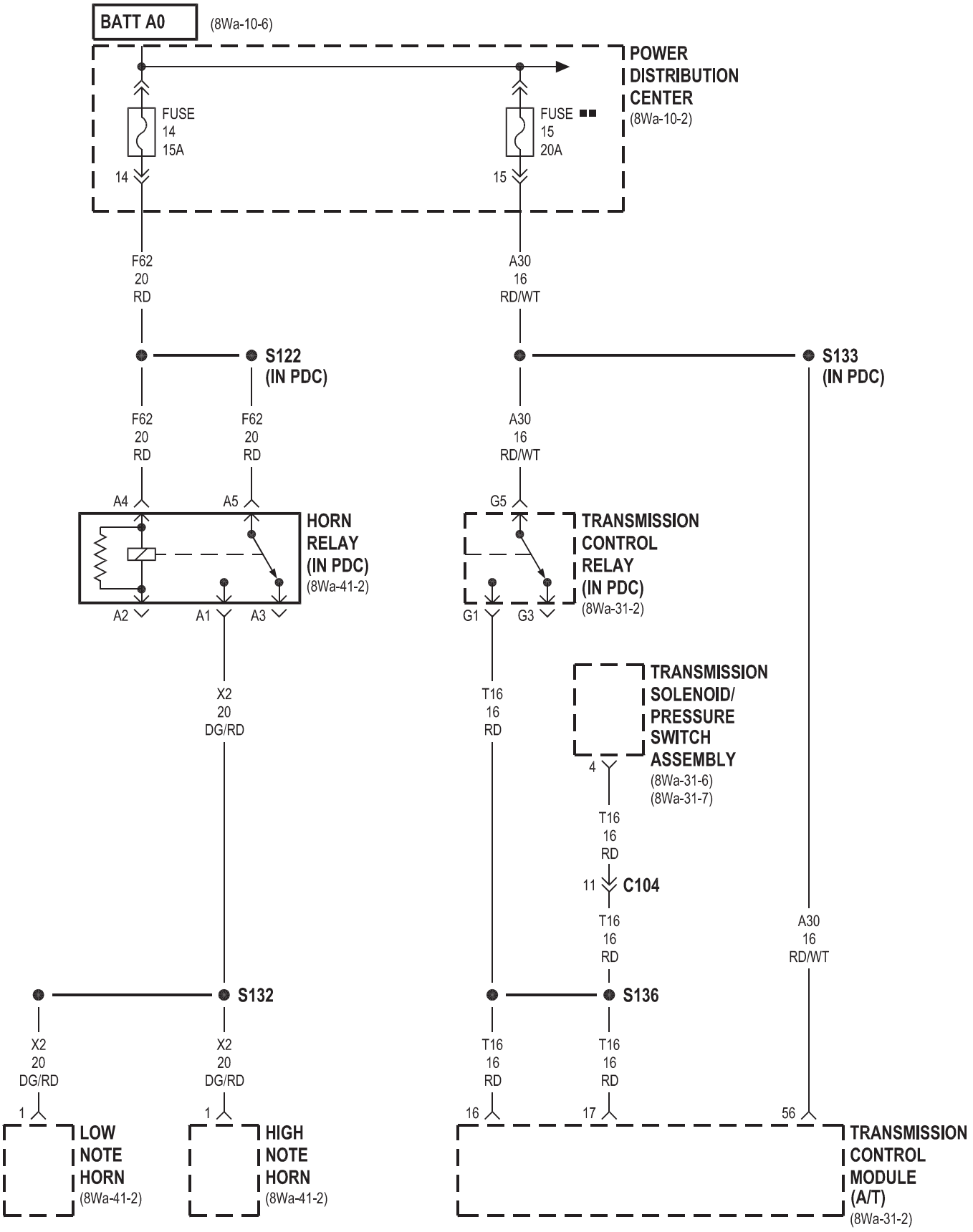
BATT A0
(8Wa-10-6)
POWER DISTRIBUTION CENTER
(8Wa-10-2)
FUSE 14 15A
FUSE 15 20A ■■
14
15
F62 20 RD
A30 16 RD/WT
S122 (IN PDC)
S133 (IN PDC)
F62 20 RD
F62 20 RD
A30 16 RD/WT
A4
A5
G5
HORN RELAY (IN PDC)
(8Wa-41-2)
TRANSMISSION CONTROL RELAY (IN PDC)
(8Wa-31-2)
A2
A1
A3
G1
G3
X2 20 DG/RD
T16 16 RD
TRANSMISSION SOLENOID/ PRESSURE SWITCH ASSEMBLY
(8Wa-31-6)
(8Wa-31-7)
4
T16 16 RD
11
C104
T16 16 RD
A30 16 RD/WT
S132
S136
X2 20 DG/RD
X2 20 DG/RD
T16 16 RD
T16 16 RD
1
1
16
17
56
LOW NOTE HORN
(8Wa-41-2)
HIGH NOTE HORN
(8Wa-41-2)
TRANSMISSION CONTROL MODULE (A/T)
(8Wa-31-2)

■■ A/T

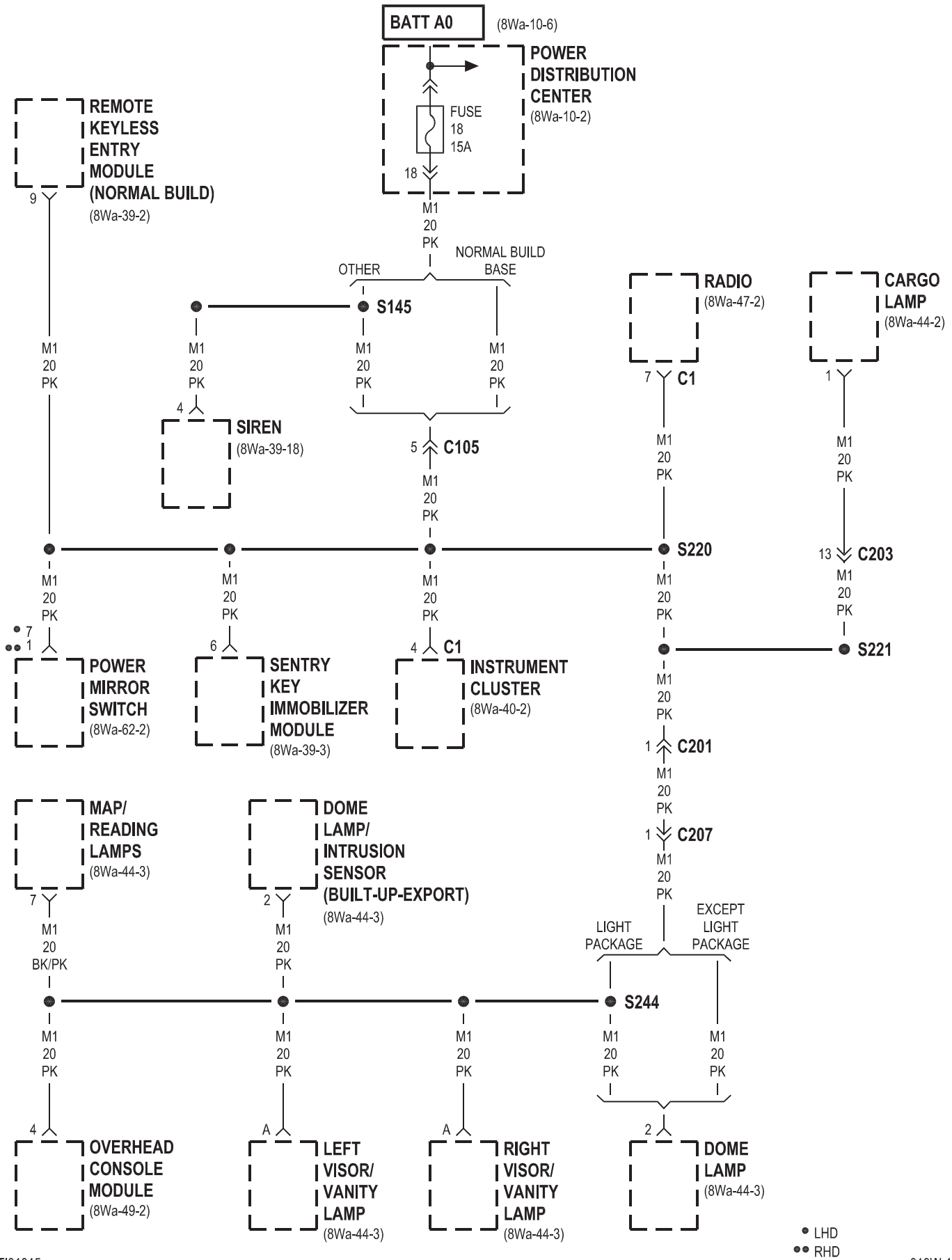
BATT A0
(8Wa-10-6)
POWER DISTRIBUTION CENTER
(8Wa-10-2)
FUSE 18 15A
18
M1 20 PK
REMOTE KEYLESS ENTRY MODULE (NORMAL BUILD)
(8Wa-39-2)
9
OTHER
NORMAL BUILD BASE
S145
RADIO
(8Wa-47-2)
CARGO LAMP
(8Wa-44-2)
7 C1
1
4
SIREN
(8Wa-39-18)
5 C105
13 C203
S220
S221
POWER MIRROR SWITCH
(8Wa-62-2)
6
SENTRY KEY IMMOBILIZER MODULE
(8Wa-39-3)
4 C1
INSTRUMENT CLUSTER
(8Wa-40-2)
1 C201
1 C207
MAP/ READING LAMPS
(8Wa-44-3)
DOME LAMP/ INTRUSION SENSOR (BUILT-UP-EXPORT)
(8Wa-44-3)
2
M1 20 BK/PK
LIGHT PACKAGE
EXCEPT LIGHT PACKAGE
S244
4
OVERHEAD CONSOLE MODULE
(8Wa-49-2)
A
LEFT VISOR/ VANITY LAMP
(8Wa-44-3)
RIGHT VISOR/ VANITY LAMP
(8Wa-44-3)
DOME LAMP
(8Wa-44-3)
LHD
RHD

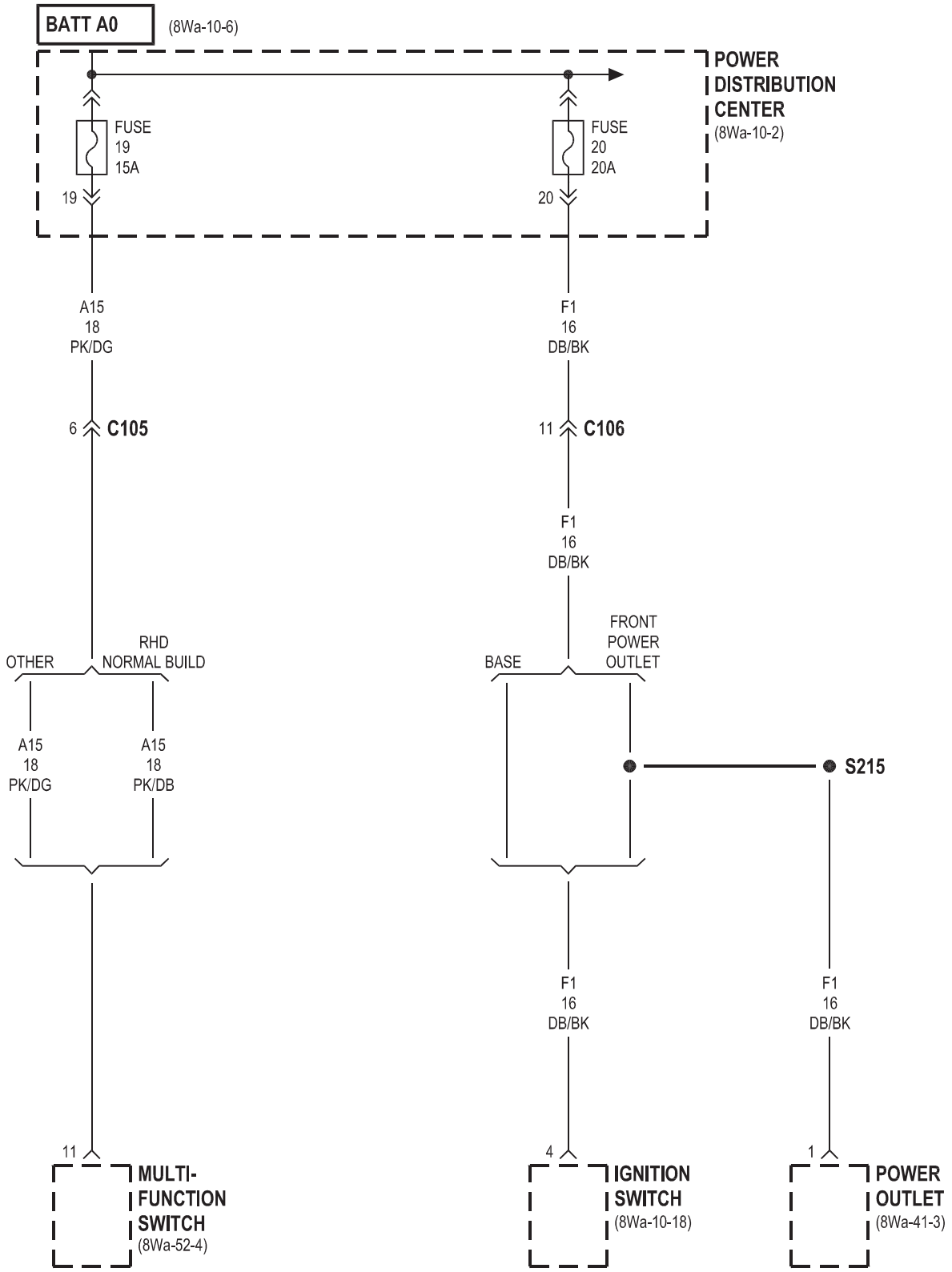
BATT A0
(8Wa-10-6)
POWER DISTRIBUTION CENTER
(8Wa-10-2)
FUSE 19 15A
FUSE 20 20A
19
20
A15 18 PK/DG
F1 16 DB/BK
6
C105
11
C106
F1 16 DB/BK
OTHER
RHD NORMAL BUILD
BASE
FRONT POWER OUTLET
A15 18 PK/DG
A15 18 PK/DB
S215
F1 16 DB/BK
F1 16 DB/BK
11
MULTI-FUNCTION SWITCH
(8Wa-52-4)
4
IGNITION SWITCH
(8Wa-10-18)
1
POWER OUTLET
(8Wa-41-3)

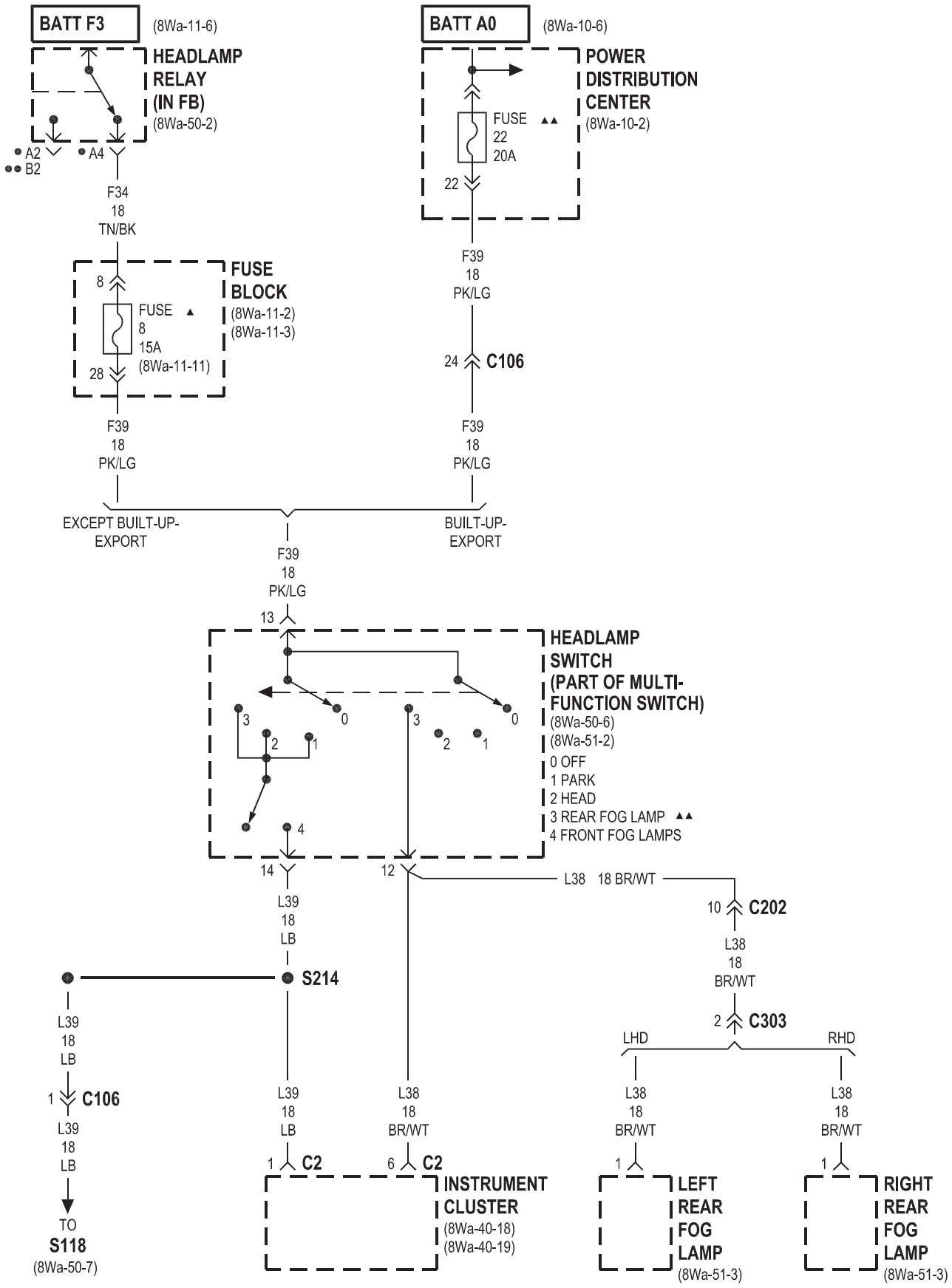

▲ EXCEPT BUILT-UP-EXPORT
▲▲ BUILT-UP-EXPORT
● LHD
●● RHD

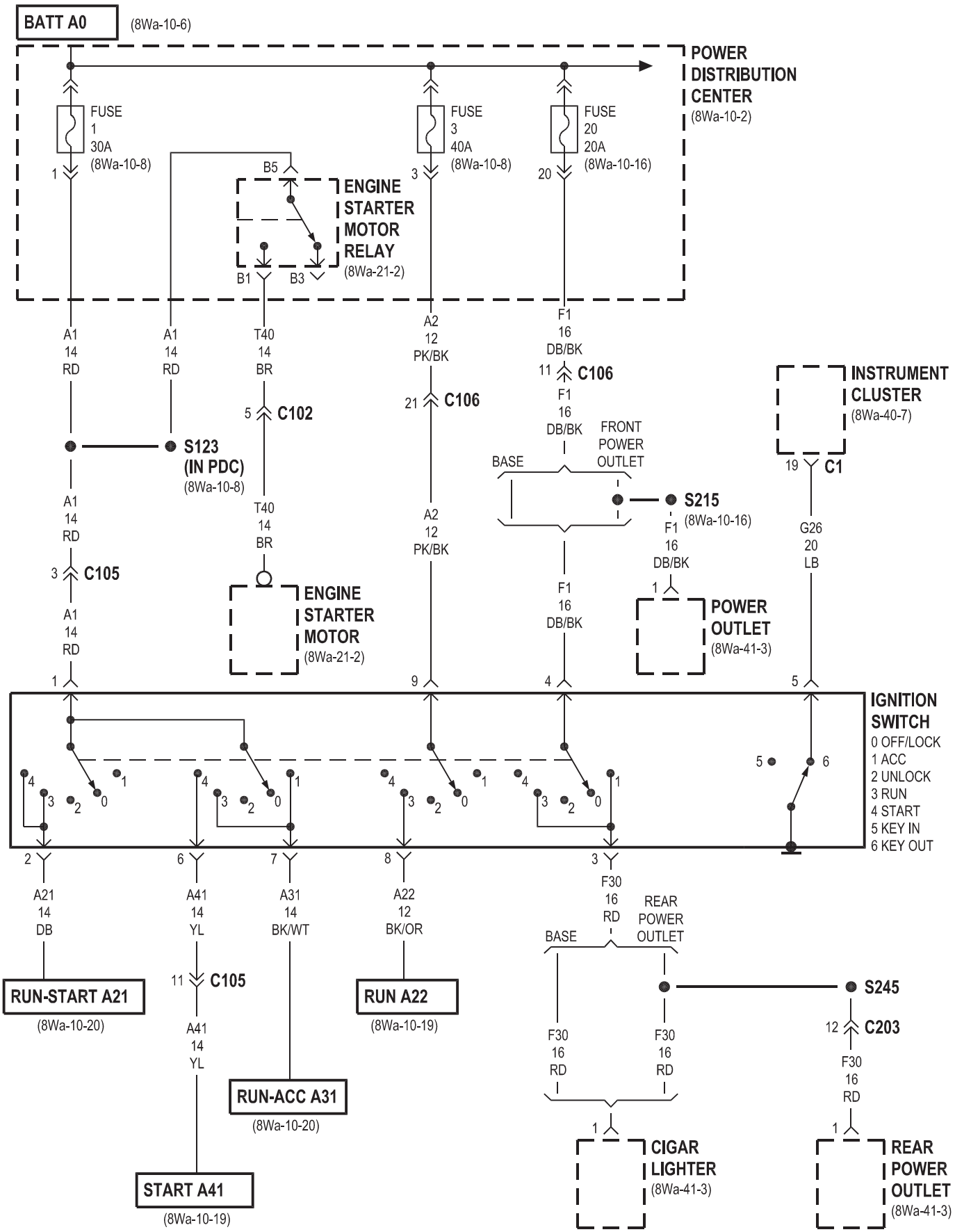
BATT A0
(8Wa-10-6)
POWER DISTRIBUTION CENTER
(8Wa-10-2)
FUSE 1 30A
(8Wa-10-8)
FUSE 3 40A
(8Wa-10-8)
FUSE 20 20A
(8Wa-10-16)
ENGINE STARTER MOTOR RELAY
(8Wa-21-2)
B5
B1
B3
A1 14 RD
T40 14 BR
A2 12 PK/BK
F1 16 DB/BK
C106
C102
C105
S123 (IN PDC)
(8Wa-10-8)
ENGINE STARTER MOTOR
(8Wa-21-2)
FRONT POWER OUTLET
BASE
S215
(8Wa-10-16)
POWER OUTLET
(8Wa-41-3)
INSTRUMENT CLUSTER
(8Wa-40-7)
C1
G26 20 LB
IGNITION SWITCH
0 OFF/LOCK
1 ACC
2 UNLOCK
3 RUN
4 START
5 KEY IN
6 KEY OUT
A21 14 DB
A41 14 YL
A31 14 BK/WT
A22 12 BK/OR
F30 16 RD
REAR POWER OUTLET
S245
C203
RUN-START A21
(8Wa-10-20)
RUN A22
(8Wa-10-19)
RUN-ACC A31
(8Wa-10-20)
START A41
(8Wa-10-19)
CIGAR LIGHTER
(8Wa-41-3)
REAR POWER OUTLET
(8Wa-41-3)

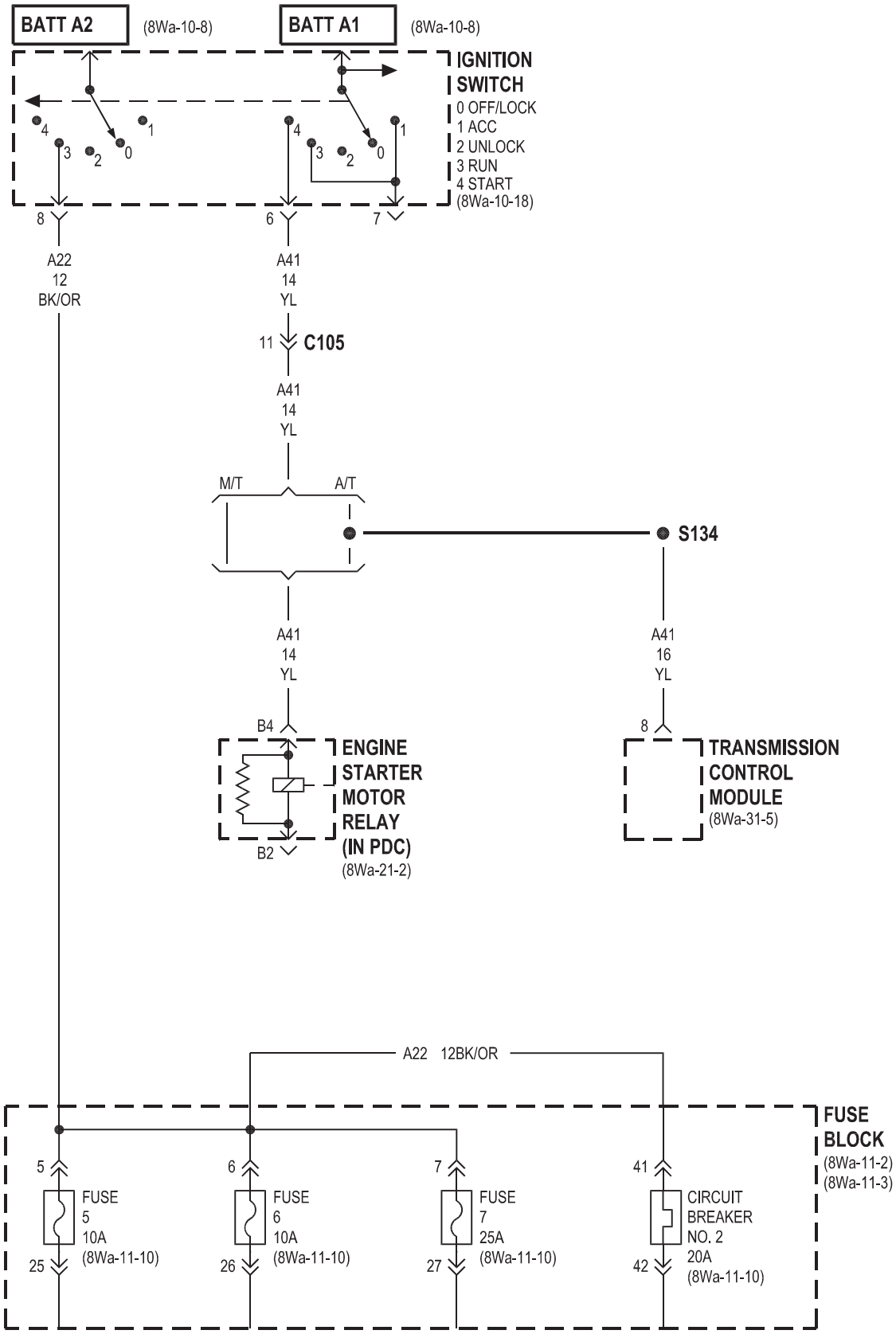
BATT A2
(8Wa-10-8)
BATT A1
(8Wa-10-8)
IGNITION SWITCH
0 OFF/LOCK
1 ACC
2 UNLOCK
3 RUN
4 START
(8Wa-10-18)
8
6
7
A22
12
BK/OR
A41
14
YL
11
C105
A41
14
YL
M/T
A/T
S134
A41
14
YL
A41
16
YL
B4
B2
ENGINE STARTER MOTOR RELAY (IN PDC)
(8Wa-21-2)
8
TRANSMISSION CONTROL MODULE
(8Wa-31-5)
A22 12BK/OR
FUSE BLOCK
(8Wa-11-2)
(8Wa-11-3)
5
25
FUSE 5 10A
(8Wa-11-10)
6
26
FUSE 6 10A
(8Wa-11-10)
7
27
FUSE 7 25A
(8Wa-11-10)
41
42
CIRCUIT BREAKER NO. 2 20A
(8Wa-11-10)

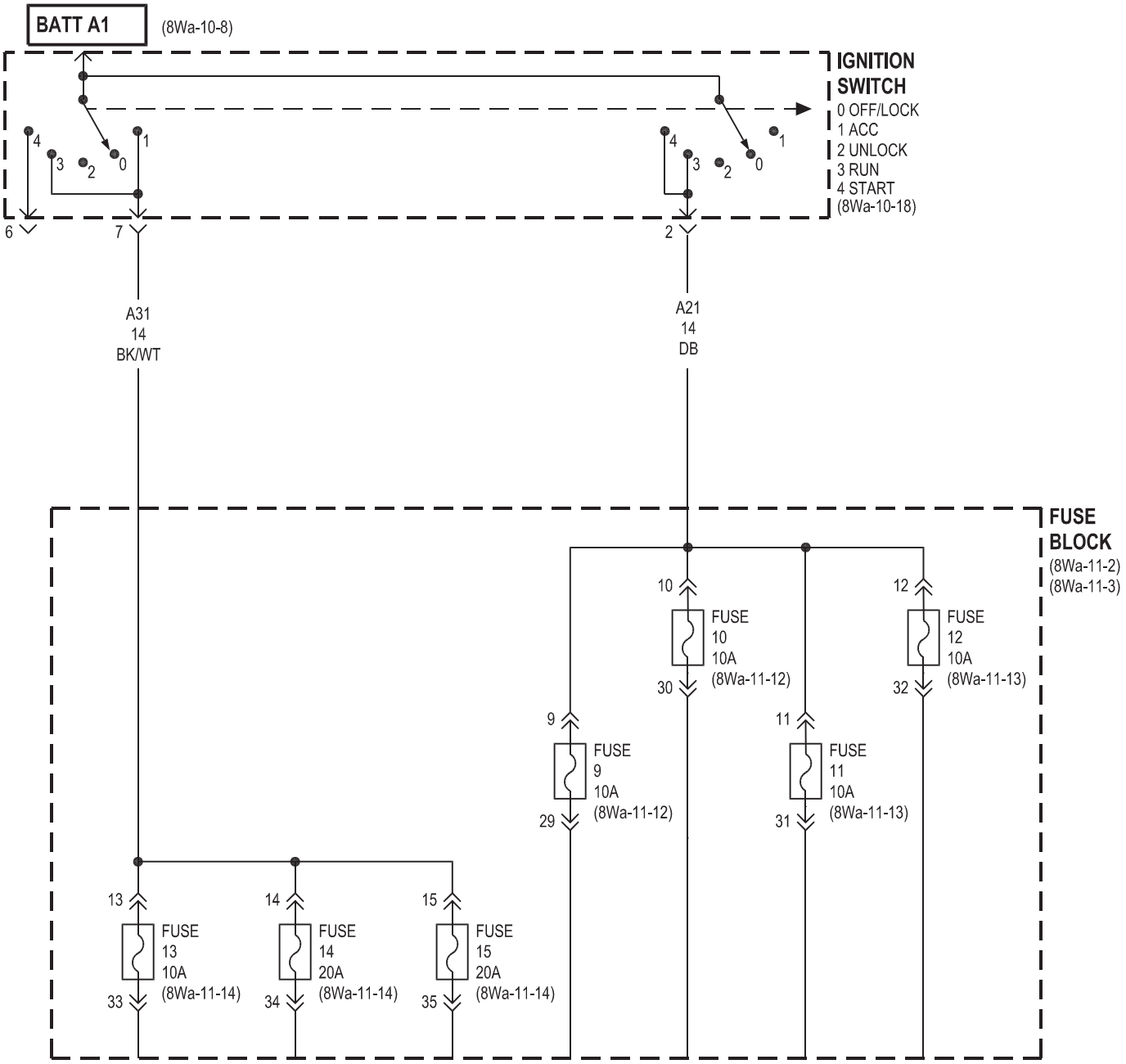
BATT A1
(8Wa-10-8)
IGNITION SWITCH
0 OFF/LOCK
1 ACC
2 UNLOCK
3 RUN
4 START
(8Wa-10-18)
6
7
2
A31
14
BK/WT
A21
14
DB
FUSE BLOCK
(8Wa-11-2)
(8Wa-11-3)
10
FUSE
10
10A
(8Wa-11-12)
30
12
FUSE
12
10A
(8Wa-11-13)
32
9
FUSE
9
10A
(8Wa-11-12)
29
11
FUSE
11
10A
(8Wa-11-13)
31
13
FUSE
13
10A
(8Wa-11-14)
33
14
FUSE
14
20A
(8Wa-11-14)
34
15
FUSE
15
20A
(8Wa-11-14)
35

8W-11 FUSE BLOCK

Component	Page
A/C Compressor Clutch Relay	8Wa-11-13
Back-Up Lamp Switch	8Wa-11-10
Blower Motor	8Wa-11-10
Brake Transmission Shift Interlock Solenoid	8Wa-11-13
Circuit Breaker No. 1 (FB)	8Wa-11-6, 11, 16
Circuit Breaker No. 2 (FB)	8Wa-11-10
Controller Antilock Brake	8Wa-11-13
Driver Door Lock Switch	8Wa-11-6
Driver Heated Seat Module	8Wa-11-9
Driver Heated Seat Switch	8Wa-11-9
Front Power Window Switch	8Wa-11-10
Front Wiper Motor	8Wa-11-14
Front Wiper/Washer Switch	8Wa-11-14
Fuel Pump Relay	8Wa-11-13
Fuse 1 (FB)	8Wa-11-6
Fuse 2 (FB)	8Wa-11-6
Fuse 3 (FB)	8Wa-11-6
Fuse 4 (FB)	8Wa-11-8
Fuse 4 (PDC)	8Wa-11-8
Fuse 5 (FB)	8Wa-11-10
Fuse 6 (FB)	8Wa-11-8, 10
Fuse 7 (FB)	8Wa-11-10
Fuse 8 (FB)	8Wa-11-11
Fuse 8 (PDC)	8Wa-11-15
Fuse 9 (FB)	8Wa-11-12
Fuse 10 (FB)	8Wa-11-12
Fuse 11 (FB)	8Wa-11-13
Fuse 12 (FB)	8Wa-11-13
Fuse 13 (FB)	8Wa-11-14
Fuse 14 (FB)	8Wa-11-14
Fuse 15 (FB)	8Wa-11-14
Fuse 17 (FB)	8Wa-11-8
Fuse 18 (FB)	8Wa-11-15
Fuse 19 (FB)	8Wa-11-17
Fuse 20 (FB)	8Wa-11-17
Fuse Block	8Wa-11-2, 3, 6, 8, 10, 11, 12, 13, 14, 15, 16, 17
G201	8Wa-11-8
Headlamp Leveling Switch	8Wa-11-17
Headlamp Relay	8Wa-11-11, 16, 17
Headlamp Switch	8Wa-11-6, 11, 16, 17
Heated Seat Relay	8Wa-11-8, 10
High Speed Radiator Fan Relay	8Wa-11-13
Instrument Cluster	8Wa-11-6, 11, 12, 16, 17
Leak Detection Pump	8Wa-11-13
Left Front Park/Turn Signal Lamp	8Wa-11-7
Left High Beam Headlamp	8Wa-11-17
Left Lavalier Module	8Wa-11-7, 17
Left License Lamp	8Wa-11-7
Left Low Beam Headlamp	8Wa-11-17
Left Power Mirror	8Wa-11-15
Left Side Impact Airbag Control Module	8Wa-11-12
Left Tail/Stop Lamp	8Wa-11-7
License Lamp	8Wa-11-7
Low Speed Radiator Fan Relay	8Wa-11-13
Multi- Function Switch	8Wa-11-7, 14
Occupant Restraint Controller	8Wa-11-10, 12
Overhead Console Module	8Wa-11-14
Passenger Door Lock Switch	8Wa-11-6
Passenger Heated Seat Module	8Wa-11-9
Passenger Heated Seat Switch	8Wa-11-9
Power Distribution Center	8Wa-11-8, 15
Power Mirror Switch	8Wa-11-6
Power Sunroof Module	8Wa-11-14
Powertrain Control Module	8Wa-11-13
Radio	8Wa-11-6, 14
Rear Window Defogger	8Wa-11-15
Rear Window Defogger Switch	8Wa-11-10, 15
Rear Wiper Motor	8Wa-11-14
Rear Wiper Switch	8Wa-11-14
Remote Keyless Entry Module	8Wa-11-6, 7, 12, 16
Right Front Park/Turn Signal Lamp	8Wa-11-7
Right High Beam Headlamp	8Wa-11-17
Right Lavalier Module	8Wa-11-7, 17
Right Low Beam Headlamp	8Wa-11-17
Right Power Mirror	8Wa-11-15
Right Rear Turn Signal Lamp	8Wa-11-7
Right Side Impact Airbag Control Module	8Wa-11-12
Right Tail/Stop Lamp	8Wa-11-6
Sentry Key Immobilizer Module	8Wa-11-12
Transmission Control Module	8Wa-11-13
Transmission Range Sensor	8Wa-11-10

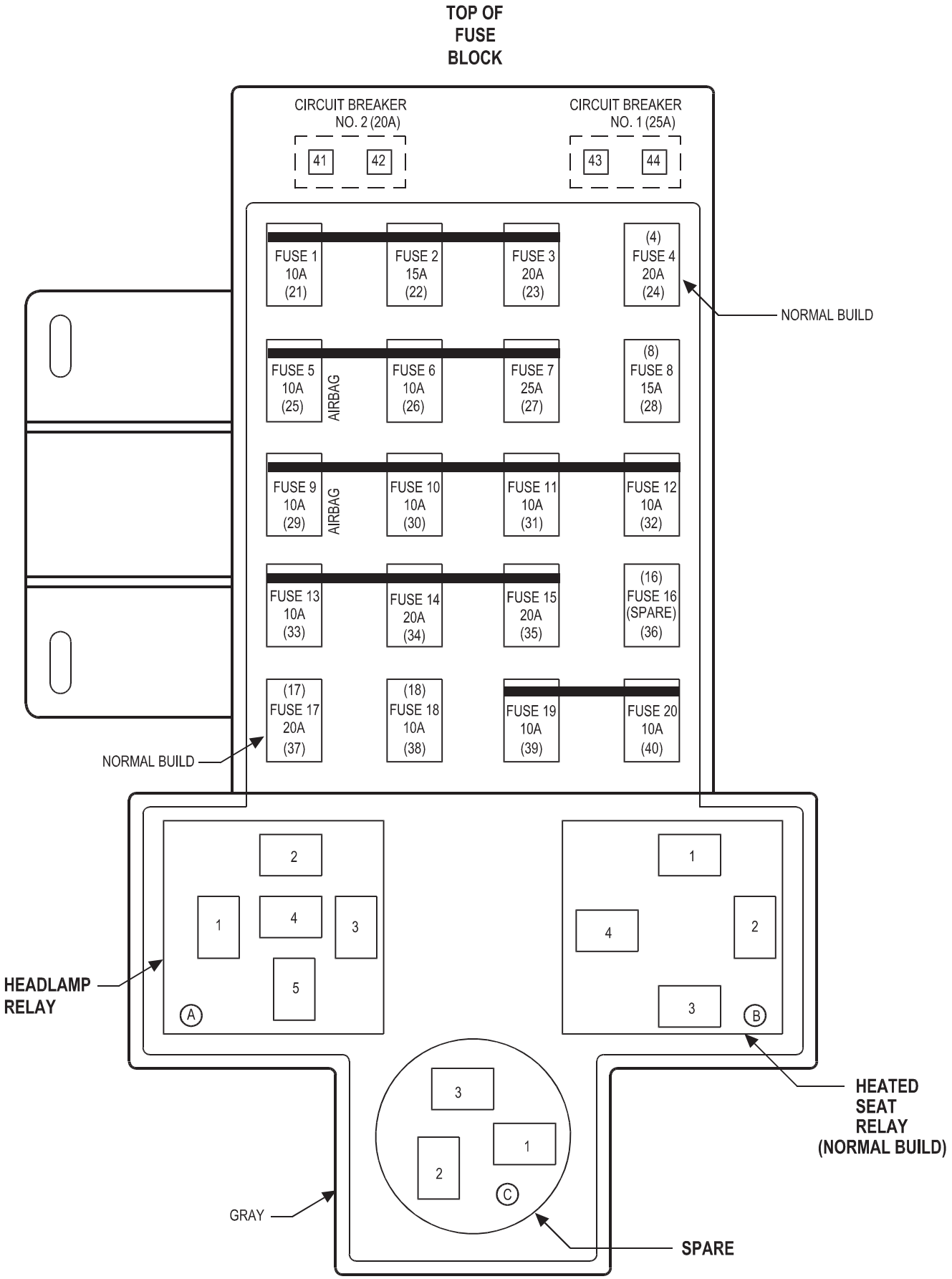
TOP OF FUSE BLOCK
CIRCUIT BREAKER NO. 2 (20A)
41
42
CIRCUIT BREAKER NO. 1 (25A)
43
44
FUSE 1 10A (21)
FUSE 2 15A (22)
FUSE 3 20A (23)
(4) FUSE 4 20A (24)
NORMAL BUILD
FUSE 5 10A (25)
AIRBAG
FUSE 6 10A (26)
FUSE 7 25A (27)
(8) FUSE 8 15A (28)
FUSE 9 10A (29)
AIRBAG
FUSE 10 10A (30)
FUSE 11 10A (31)
FUSE 12 10A (32)
FUSE 13 10A (33)
FUSE 14 20A (34)
FUSE 15 20A (35)
(16) FUSE 16 (SPARE) (36)
(17) FUSE 17 20A (37)
(18) FUSE 18 10A (38)
FUSE 19 10A (39)
FUSE 20 10A (40)
NORMAL BUILD
HEADLAMP RELAY
A
HEATED SEAT RELAY (NORMAL BUILD)
B
GRAY
C
SPARE

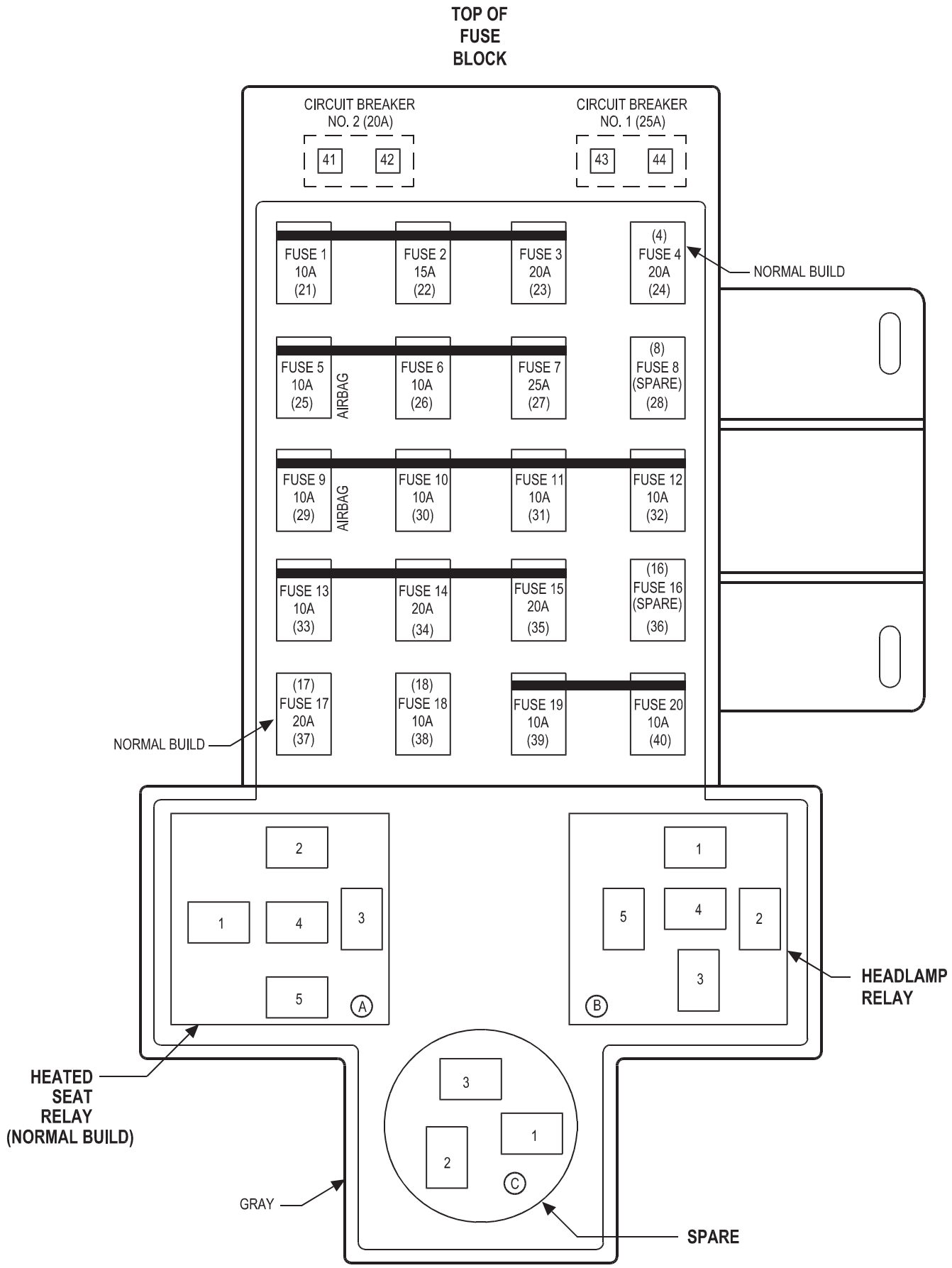
TOP OF FUSE BLOCK
CIRCUIT BREAKER NO. 2 (20A)
41
42
CIRCUIT BREAKER NO. 1 (25A)
43
44
FUSE 1 10A (21)
FUSE 2 15A (22)
FUSE 3 20A (23)
(4) FUSE 4 20A (24)
NORMAL BUILD
FUSE 5 10A (25)
AIRBAG
FUSE 6 10A (26)
FUSE 7 25A (27)
(8) FUSE 8 (SPARE) (28)
FUSE 9 10A (29)
AIRBAG
FUSE 10 10A (30)
FUSE 11 10A (31)
FUSE 12 10A (32)
FUSE 13 10A (33)
FUSE 14 20A (34)
FUSE 15 20A (35)
(16) FUSE 16 (SPARE) (36)
(17) FUSE 17 20A (37)
(18) FUSE 18 10A (38)
FUSE 19 10A (39)
FUSE 20 10A (40)
NORMAL BUILD
A
B
C
HEADLAMP RELAY
HEATED SEAT RELAY (NORMAL BUILD)
GRAY
SPARE

FUSES

FUSE	AMPS	FUSED CIRCUIT	FUNCTION NAME
1	10A	F9 20RD/BK ##	FUSED B(+)
2	15A	F33 18PK/RD	FUSED B(+)
3	20A	F35 18RD	FUSED B(+)
4	20A	F99 18RD/WT △ ###	FUSED HEATED SEAT RELAY OUTPUT
5	10A	F25 18TN/LG	FUSED IGNITION SWITCH OUTPUT (RUN)
6	10A	F20 18WT	FUSED IGNITION SWITCH OUTPUT (RUN)
7	25A	C1 14DG	FUSED IGNITION SWITCH OUTPUT (RUN)
8	15A	F39 18PK/LG ▲	FUSED HEADLAMP RELAY OUTPUT
9	10A	F15 18DG/WT	FUSED IGNITION SWITCH OUTPUT (RUN-START)
10	10A	G5 20DB/BK	FUSED IGNITION SWITCH OUTPUT (RUN-START)
11	10A	F12 20DB/WT	FUSED IGNITION SWITCH OUTPUT (RUN-START)
12	10A	F18 20LG/BK	FUSED IGNITION SWITCH OUTPUT (RUN-START)
		F18 20LG/BK	FUSED IGNITION SWITCH OUTPUT (RUN-START)
13	10A	X12 18RD/WT	FUSED IGNITION SWITCH OUTPUT (RUN-ACC)
14	20A	F10 18YL/RD	FUSED IGNITION SWITCH OUTPUT (RUN-ACC)
15	20A	F13 16DB	FUSED IGNITION SWITCH OUTPUT (RUN-ACC)
16	-	-	-
17	20A	F98 18RD/WT △ ###	FUSED HEATED SEAT RELAY OUTPUT
18	10A	C16 20LB/YL	FUSED REAR WINDOW DEFOGGER SWITCH OUTPUT
19	10A	L44 16VT/RD	FUSED RIGHT LOW BEAM OUTPUT
20	10A	L43 16VT	FUSED LEFT LOW BEAM OUTPUT
		L43 18VT ▲▲	FUSED LEFT LOW BEAM OUTPUT

CIRCUIT BREAKERS

C.B. NO. 1	25A	F3 16LB/OR ##	FUSED B(+)
C.B. NO. 1	25A	F3 12LB/OR ###	FUSED B(+)
C.B. NO. 2	20A	F21 14TN	FUSED IGNITION SWITCH OUTPUT (RUN)

△ HEATED SEAT
EARLY BUILD
NORMAL BUILD
▲ EXCEPT BUILT-UP-EXPORT
▲▲ BUILT-UP-EXPORT

RELAYS

HEADLAMP RELAY (LHD)

CAVITY	CIRCUIT	FUNCTION
A1	Z1 20BK	GROUND
A2	L4 16VT/WT	HEADLAMP RELAY OUTPUT
A3	L3 16RD/OR	HEADLAMP RELAY CONTROL
A4	F34 18TN/BK ▲	HEADLAMP RELAY OUTPUT
A5	F3 16LB/OR ##	FUSED B(+)
A5	F3 12LB/OR ###	FUSED B(+)

HEADLAMP RELAY (RHD)

CAVITY	CIRCUIT	FUNCTION
B1	Z1 20BK	GROUND
B2	L4 16VT/WT	HEADLAMP RELAY OUTPUT
B3	L3 16RD/OR	HEADLAMP RELAY CONTROL
B4	-	-
B5	F3 16LB/OR ##	FUSED B(+)
B5	F3 12LB/OR ###	FUSED B(+)

HEATED SEAT RELAY (LHD) (NORMAL BUILD)

CAVITY	CIRCUIT	FUNCTION
B1	Z1 20BK	GROUND
B2	F235 12RD	HEATED SEAT RELAY OUTPUT
B3	F20 18WT	IGNITION SWITCH OUTPUT (RUN)
B4	A35 12DB	FUSED B(+)
B5	-	-

HEATED SEAT RELAY (RHD) (NORMAL BUILD)

CAVITY	CIRCUIT	FUNCTION
A1	Z1 20BK	GROUND
A2	F235 12RD	HEATED SEAT RELAY OUTPUT
A3	F20 18WT	IGNITION SWITCH OUTPUT (RUN)
A4	-	-
A5	A35 12DB	FUSED B(+)

EARLY BUILD
NORMAL BUILD
▲ EXCEPT BUILT-UP-EXPORT

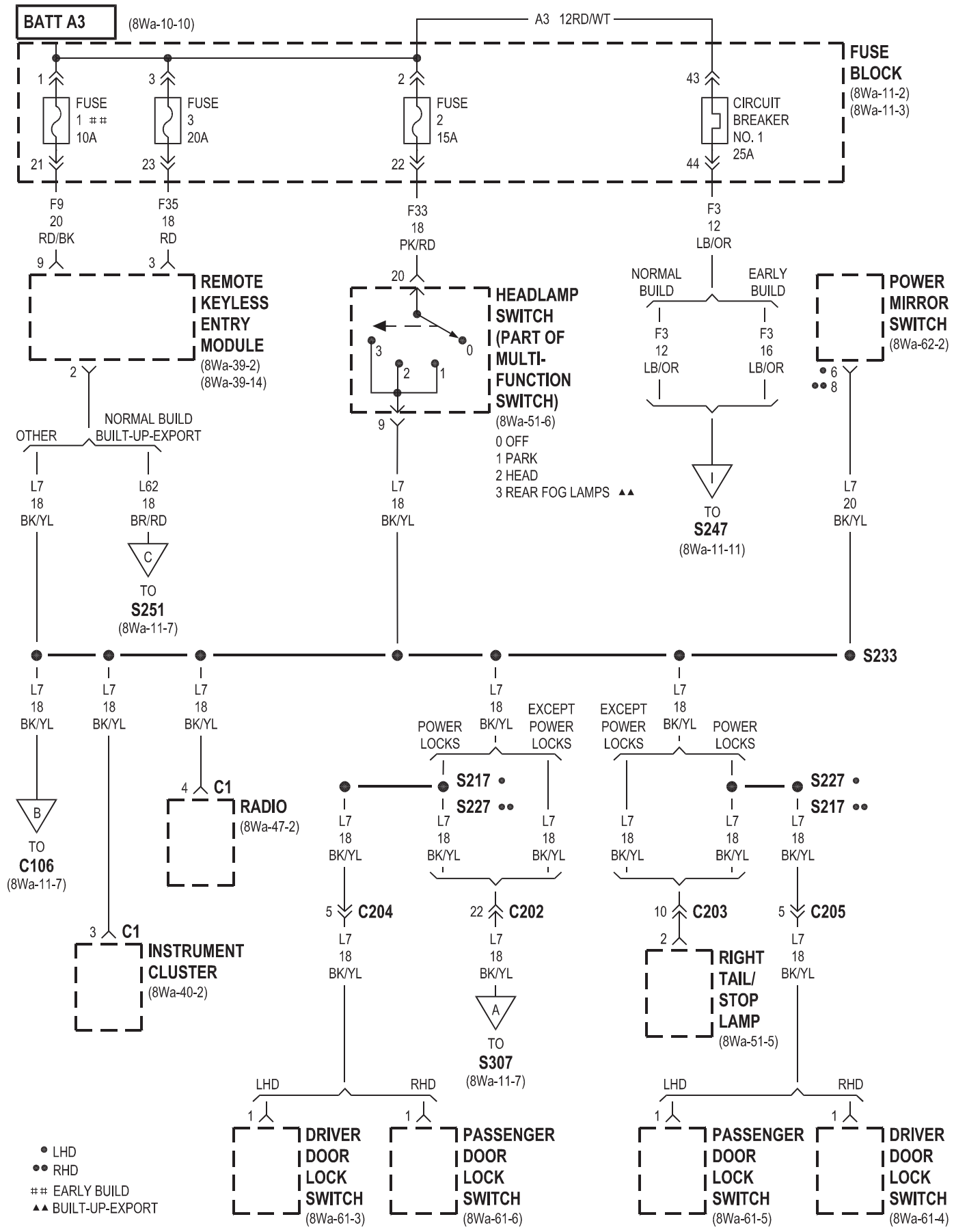
BATT A3
(8Wa-10-10)
A3 12RD/WT
FUSE BLOCK
(8Wa-11-2)
(8Wa-11-3)
1
FUSE 1 ## 10A
3
FUSE 3 20A
2
FUSE 2 15A
43
CIRCUIT BREAKER NO. 1 25A
21
23
22
44
F9 20 RD/BK
F35 18 RD
F33 18 PK/RD
F3 12 LB/OR
9
3
20
REMOTE KEYLESS ENTRY MODULE
(8Wa-39-2)
(8Wa-39-14)
HEADLAMP SWITCH (PART OF MULTI-FUNCTION SWITCH)
(8Wa-51-6)
0 OFF
1 PARK
2 HEAD
3 REAR FOG LAMPS ▲▲
NORMAL BUILD
EARLY BUILD
F3 12 LB/OR
F3 16 LB/OR
POWER MIRROR SWITCH
(8Wa-62-2)
6
8
2
OTHER
NORMAL BUILD BUILT-UP-EXPORT
L7 18 BK/YL
L62 18 BR/RD
C
TO S251
(8Wa-11-7)
L7 18 BK/YL
TO S247
(8Wa-11-11)
L7 20 BK/YL
S233
L7 18 BK/YL
L7 18 BK/YL
L7 18 BK/YL
L7 18 BK/YL
POWER LOCKS
EXCEPT POWER LOCKS
EXCEPT POWER LOCKS
POWER LOCKS
B
TO C106
(8Wa-11-7)
4
C1
RADIO
(8Wa-47-2)
S217 •
S227 ••
S227 •
S217 ••
L7 18 BK/YL
5
C204
22
C202
10
C203
5
C205
3
C1
INSTRUMENT CLUSTER
(8Wa-40-2)
2
RIGHT TAIL/ STOP LAMP
(8Wa-51-5)
A
TO S307
(8Wa-11-7)
LHD
RHD
1
DRIVER DOOR LOCK SWITCH
(8Wa-61-3)
PASSENGER DOOR LOCK SWITCH
(8Wa-61-6)
PASSENGER DOOR LOCK SWITCH
(8Wa-61-5)
DRIVER DOOR LOCK SWITCH
(8Wa-61-4)
• LHD
•• RHD
EARLY BUILD
▲▲ BUILT-UP-EXPORT

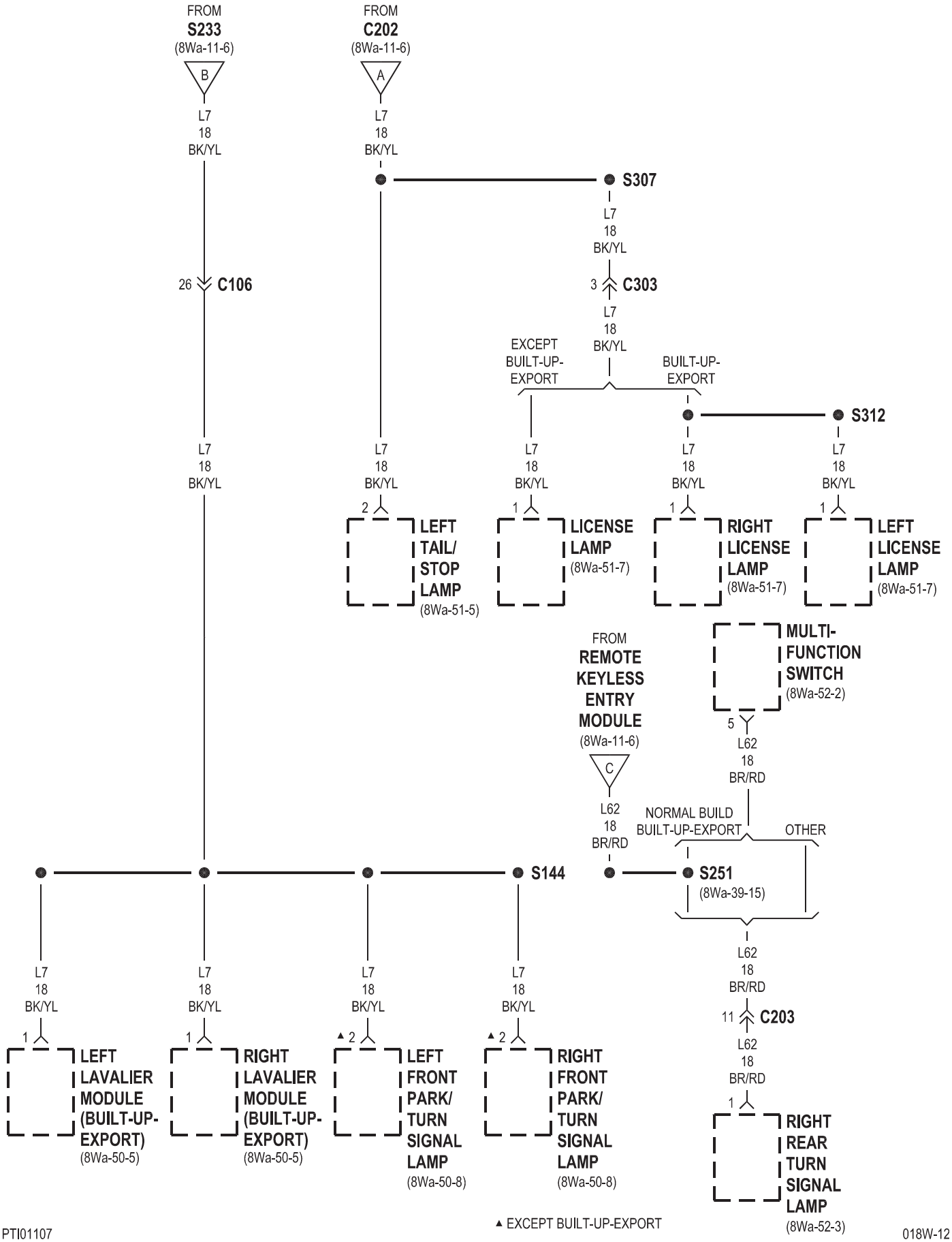

▲ EXCEPT BUILT-UP-EXPORT

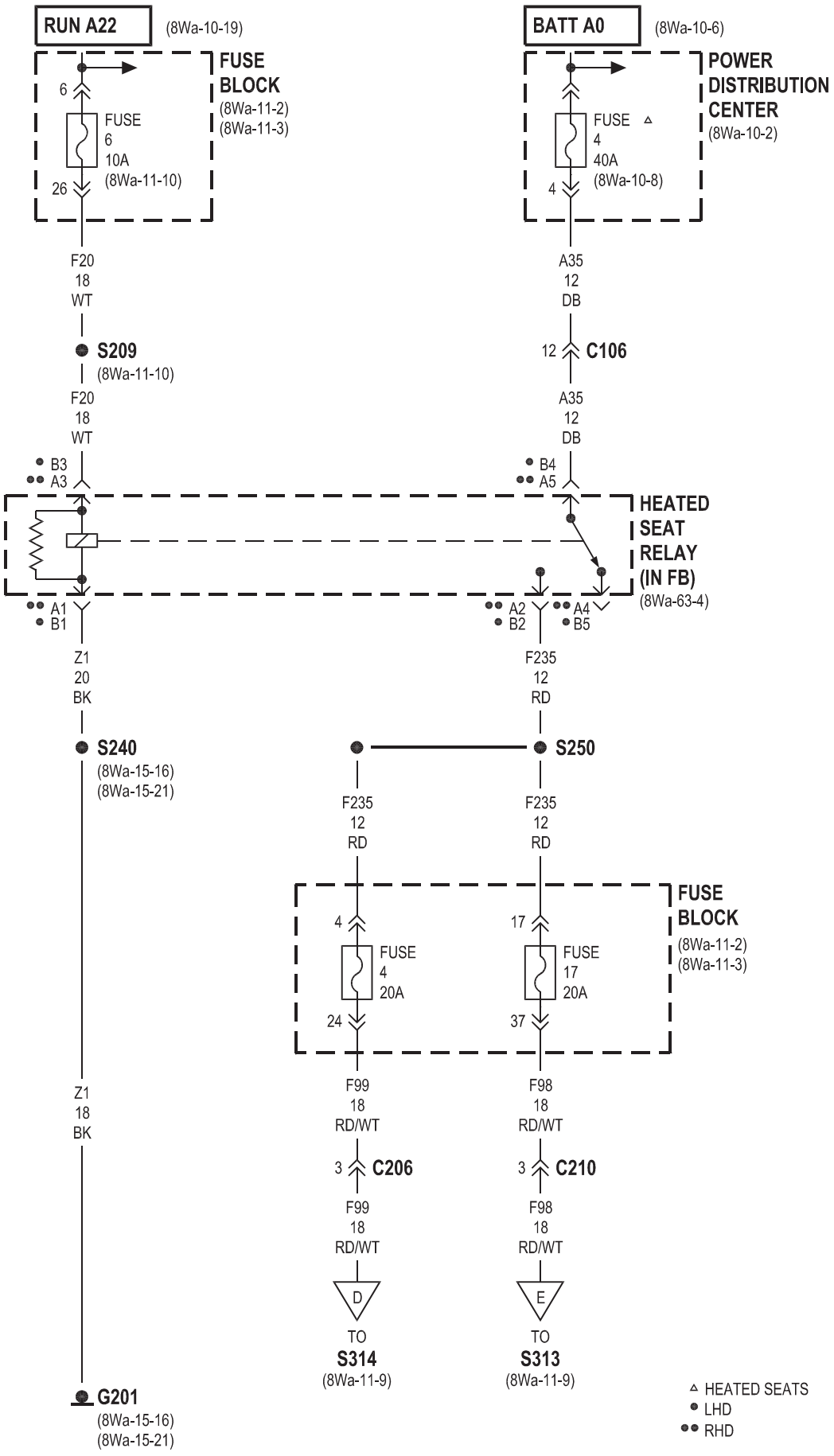
RUN A22
(8Wa-10-19)
FUSE BLOCK
(8Wa-11-2)
(8Wa-11-3)
6
FUSE 6 10A
(8Wa-11-10)
26
F20 18 WT
S209
(8Wa-11-10)
F20 18 WT
B3
A3
BATT A0
(8Wa-10-6)
POWER DISTRIBUTION CENTER
(8Wa-10-2)
FUSE 4 40A
(8Wa-10-8)
4
A35 12 DB
12
C106
A35 12 DB
B4
A5
HEATED SEAT RELAY (IN FB)
(8Wa-63-4)
A1
B1
A2
B2
A4
B5
Z1 20 BK
F235 12 RD
S240
(8Wa-15-16)
(8Wa-15-21)
S250
F235 12 RD
F235 12 RD
FUSE BLOCK
(8Wa-11-2)
(8Wa-11-3)
4
FUSE 4 20A
24
17
FUSE 17 20A
37
Z1 18 BK
F99 18 RD/WT
F98 18 RD/WT
3
C206
3
C210
F99 18 RD/WT
F98 18 RD/WT
D
E
TO
S314
(8Wa-11-9)
TO
S313
(8Wa-11-9)
G201
(8Wa-15-16)
(8Wa-15-21)
HEATED SEATS
LHD
RHD

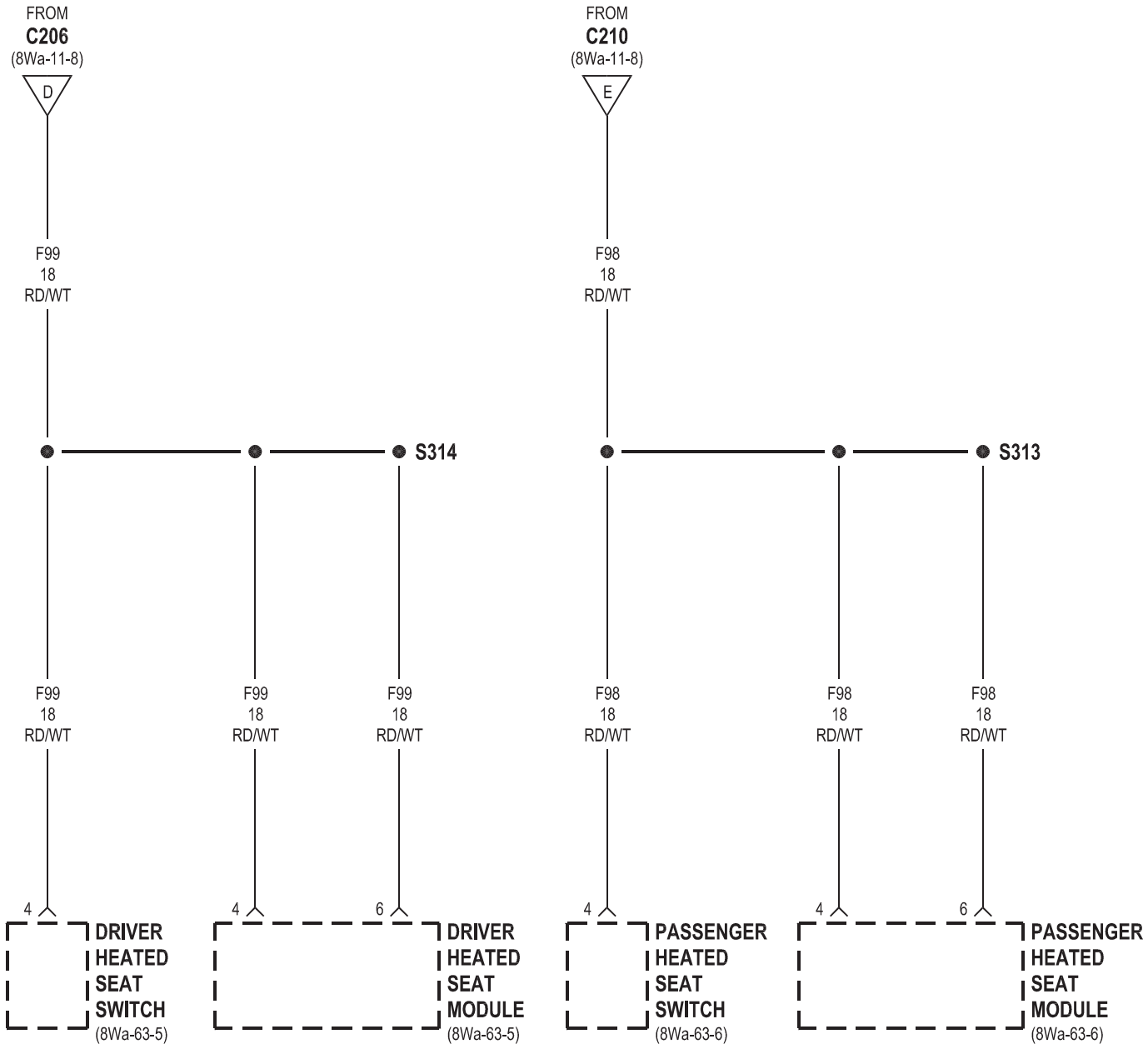
FROM
C206
(8Wa-11-8)
D
F99
18
RD/WT
S314
F99
18
RD/WT
4
DRIVER
HEATED
SEAT
SWITCH
(8Wa-63-5)
F99
18
RD/WT
4
F99
18
RD/WT
6
DRIVER
HEATED
SEAT
MODULE
(8Wa-63-5)
FROM
C210
(8Wa-11-8)
E
F98
18
RD/WT
S313
F98
18
RD/WT
4
PASSENGER
HEATED
SEAT
SWITCH
(8Wa-63-6)
F98
18
RD/WT
4
F98
18
RD/WT
6
PASSENGER
HEATED
SEAT
MODULE
(8Wa-63-6)

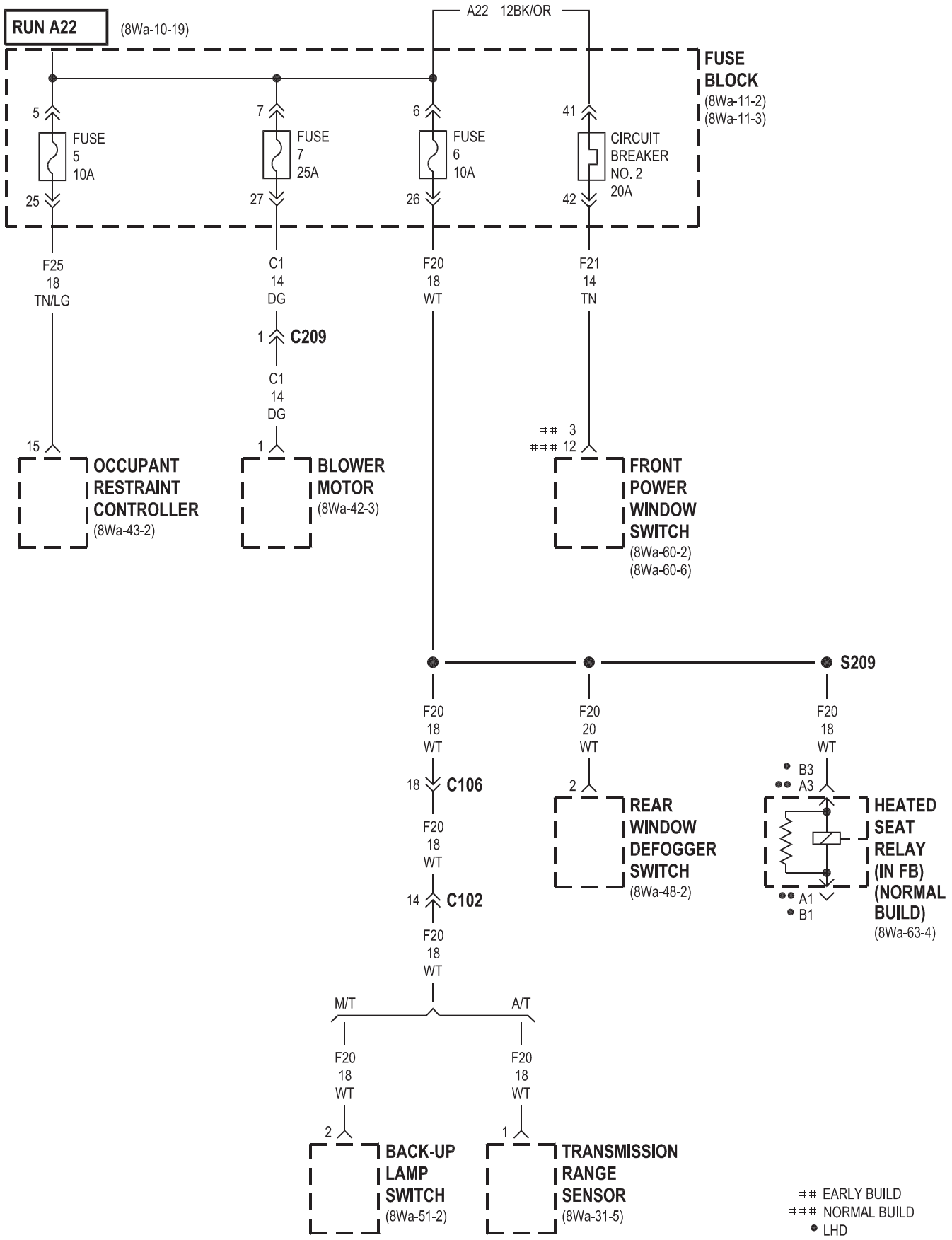
RUN A22
(8Wa-10-19)
A22 12BK/OR
FUSE BLOCK
(8Wa-11-2)
(8Wa-11-3)
5
FUSE 5 10A
25
7
FUSE 7 25A
27
6
FUSE 6 10A
26
41
CIRCUIT BREAKER NO. 2 20A
42
F25 18 TN/LG
C1 14 DG
1
C209
C1 14 DG
1
F20 18 WT
F21 14 TN
3
12
15
OCCUPANT RESTRAINT CONTROLLER
(8Wa-43-2)
BLOWER MOTOR
(8Wa-42-3)
FRONT POWER WINDOW SWITCH
(8Wa-60-2)
(8Wa-60-6)
S209
F20 18 WT
18
C106
F20 18 WT
14
C102
F20 18 WT
F20 20 WT
2
REAR WINDOW DEFOGGER SWITCH
(8Wa-48-2)
F20 18 WT
B3
A3
A1
B1
HEATED SEAT RELAY (IN FB) (NORMAL BUILD)
(8Wa-63-4)
M/T
A/T
F20 18 WT
2
BACK-UP LAMP SWITCH
(8Wa-51-2)
F20 18 WT
1
TRANSMISSION RANGE SENSOR
(8Wa-31-5)
EARLY BUILD
NORMAL BUILD
• LHD
•• RHD

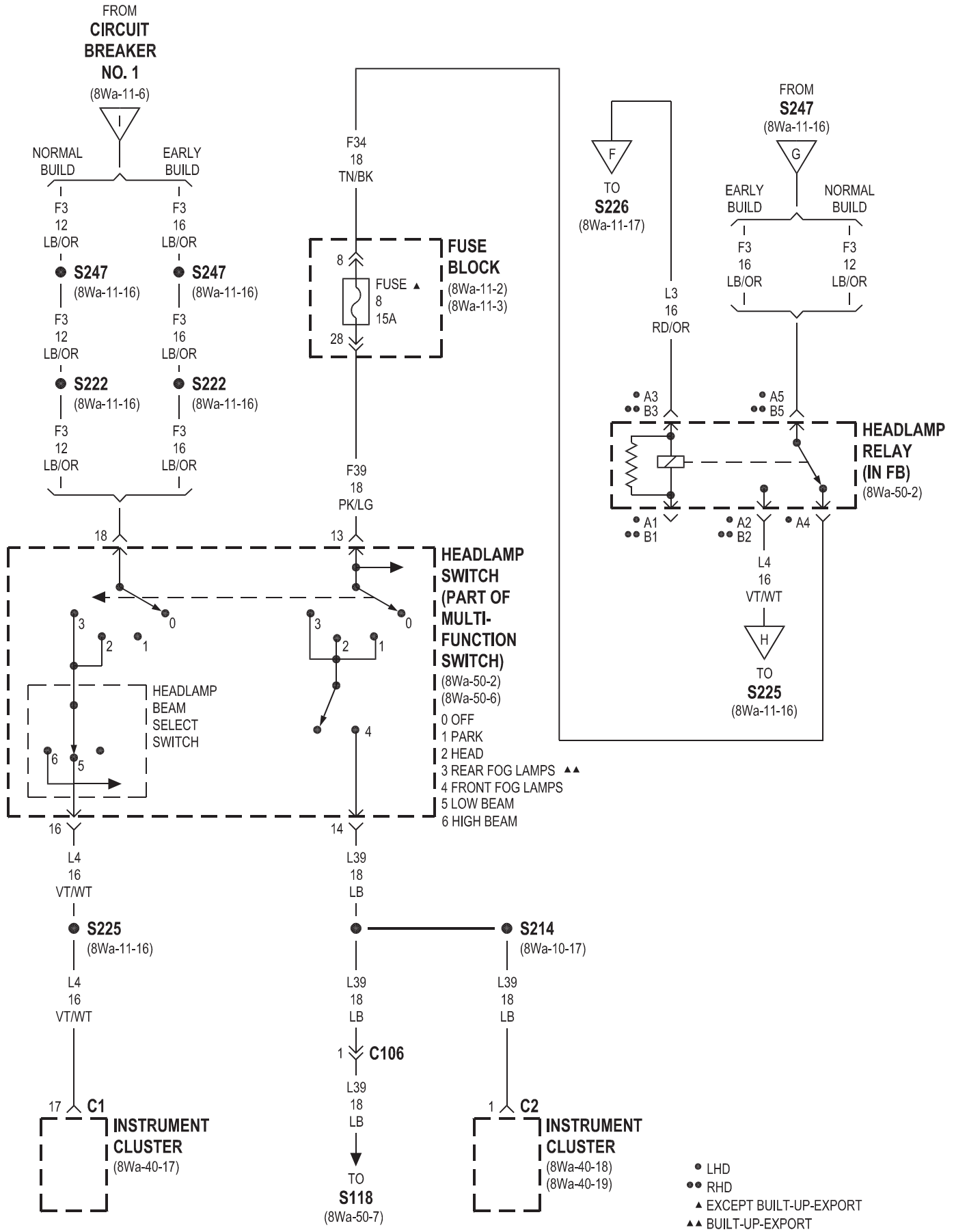
FROM
CIRCUIT
BREAKER
NO. 1
(8Wa-11-6)
I
NORMAL BUILD
EARLY BUILD
F3
12
LB/OR
F3
16
LB/OR
S247
(8Wa-11-16)
S247
(8Wa-11-16)
F3
12
LB/OR
F3
16
LB/OR
S222
(8Wa-11-16)
S222
(8Wa-11-16)
F3
12
LB/OR
F3
16
LB/OR
18
F34
18
TN/BK
8
FUSE ▲
8
15A
28
FUSE
BLOCK
(8Wa-11-2)
(8Wa-11-3)
F39
18
PK/LG
13
HEADLAMP
SWITCH
(PART OF
MULTI-
FUNCTION
SWITCH)
(8Wa-50-2)
(8Wa-50-6)
0 OFF
1 PARK
2 HEAD
3 REAR FOG LAMPS ▲▲
4 FRONT FOG LAMPS
5 LOW BEAM
6 HIGH BEAM
HEADLAMP
BEAM
SELECT
SWITCH
16
14
L4
16
VT/WT
L39
18
LB
S225
(8Wa-11-16)
S214
(8Wa-10-17)
L4
16
VT/WT
L39
18
LB
L39
18
LB
1
C106
L39
18
LB
TO
S118
(8Wa-50-7)
17
C1
INSTRUMENT
CLUSTER
(8Wa-40-17)
1
C2
INSTRUMENT
CLUSTER
(8Wa-40-18)
(8Wa-40-19)
F
TO
S226
(8Wa-11-17)
L3
16
RD/OR
FROM
S247
(8Wa-11-16)
G
EARLY BUILD
NORMAL BUILD
F3
16
LB/OR
F3
12
LB/OR
A3
B3
A5
B5
HEADLAMP
RELAY
(IN FB)
(8Wa-50-2)
A1
B1
A2
B2
A4
L4
16
VT/WT
H
TO
S225
(8Wa-11-16)
● LHD
●● RHD
▲ EXCEPT BUILT-UP-EXPORT
▲▲ BUILT-UP-EXPORT

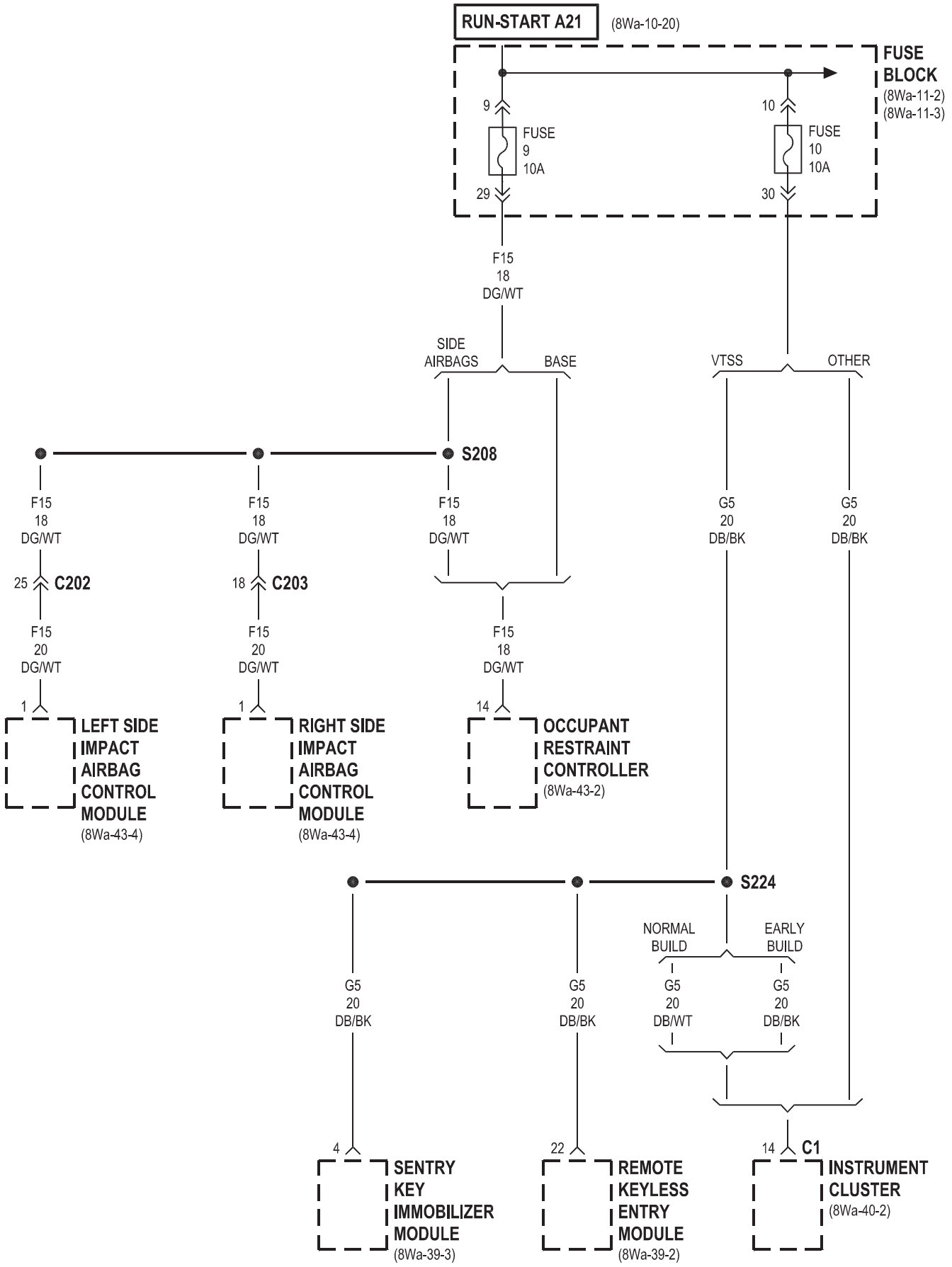
RUN-START A21
(8Wa-10-20)
FUSE BLOCK
(8Wa-11-2)
(8Wa-11-3)
9
FUSE 9 10A
29
10
FUSE 10 10A
30
F15 18 DG/WT
SIDE AIRBAGS
BASE
VTSS
OTHER
S208
F15 18 DG/WT
F15 18 DG/WT
F15 18 DG/WT
G5 20 DB/BK
G5 20 DB/BK
25 C202
18 C203
F15 20 DG/WT
F15 20 DG/WT
F15 18 DG/WT
1
1
14
LEFT SIDE IMPACT AIRBAG CONTROL MODULE
(8Wa-43-4)
RIGHT SIDE IMPACT AIRBAG CONTROL MODULE
(8Wa-43-4)
OCCUPANT RESTRAINT CONTROLLER
(8Wa-43-2)
S224
NORMAL BUILD
EARLY BUILD
G5 20 DB/BK
G5 20 DB/BK
G5 20 DB/WT
G5 20 DB/BK
4
22
14 C1
SENTRY KEY IMMOBILIZER MODULE
(8Wa-39-3)
REMOTE KEYLESS ENTRY MODULE
(8Wa-39-2)
INSTRUMENT CLUSTER
(8Wa-40-2)

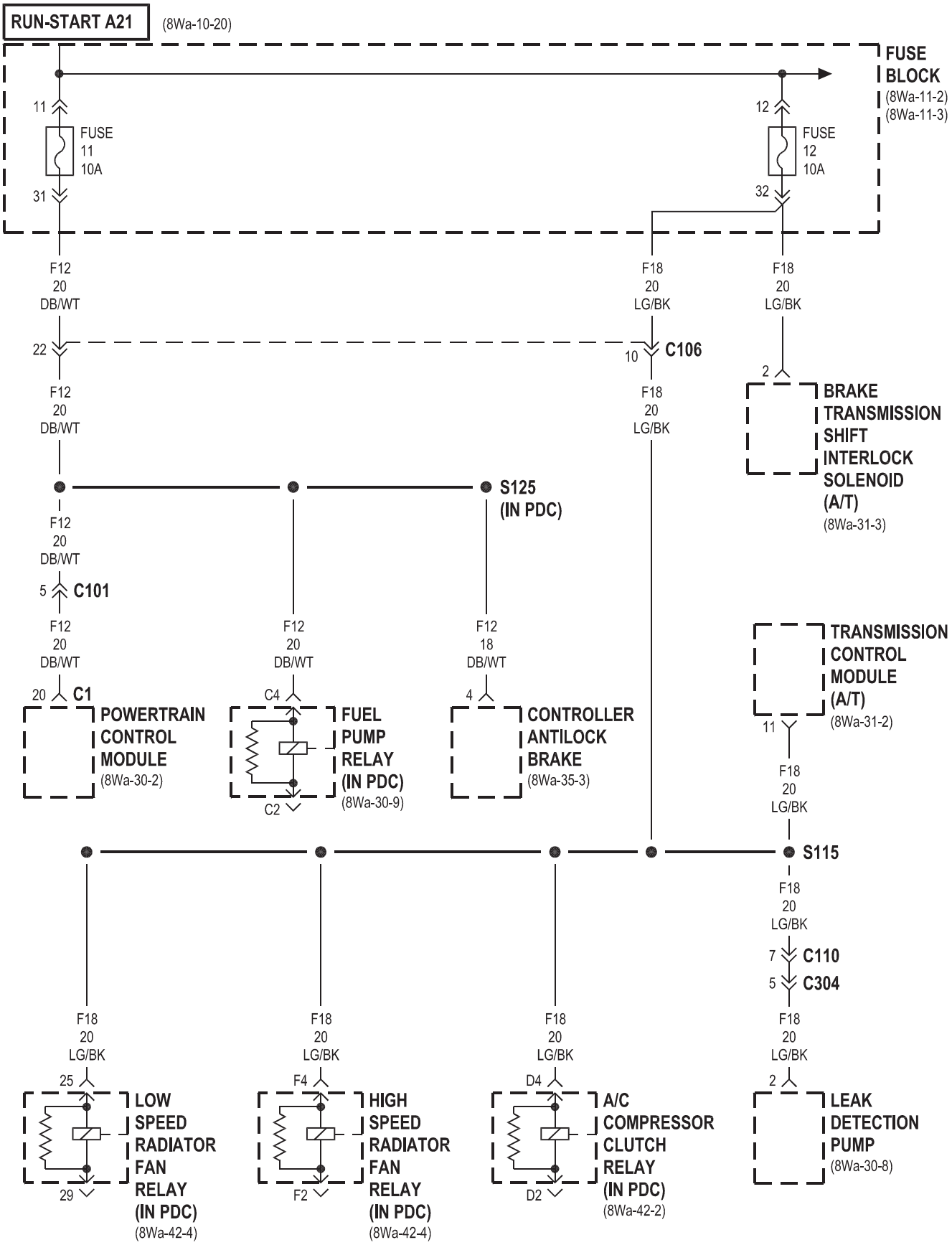
RUN-START A21
(8Wa-10-20)
FUSE BLOCK
(8Wa-11-2)
(8Wa-11-3)
11
FUSE 11 10A
31
12
FUSE 12 10A
32
F12 20 DB/WT
F18 20 LG/BK
F18 20 LG/BK
22
10
C106
2
F12 20 DB/WT
F18 20 LG/BK
BRAKE TRANSMISSION SHIFT INTERLOCK SOLENOID (A/T)
(8Wa-31-3)
S125 (IN PDC)
F12 20 DB/WT
5
C101
F12 20 DB/WT
F12 20 DB/WT
F12 18 DB/WT
TRANSMISSION CONTROL MODULE (A/T)
(8Wa-31-2)
20
C1
POWERTRAIN CONTROL MODULE
(8Wa-30-2)
C4
FUEL PUMP RELAY (IN PDC)
(8Wa-30-9)
C2
4
CONTROLLER ANTILOCK BRAKE
(8Wa-35-3)
11
F18 20 LG/BK
S115
F18 20 LG/BK
7
C110
5
C304
F18 20 LG/BK
F18 20 LG/BK
F18 20 LG/BK
F18 20 LG/BK
25
LOW SPEED RADIATOR FAN RELAY (IN PDC)
(8Wa-42-4)
29
F4
HIGH SPEED RADIATOR FAN RELAY (IN PDC)
(8Wa-42-4)
F2
D4
A/C COMPRESSOR CLUTCH RELAY (IN PDC)
(8Wa-42-2)
D2
2
LEAK DETECTION PUMP
(8Wa-30-8)

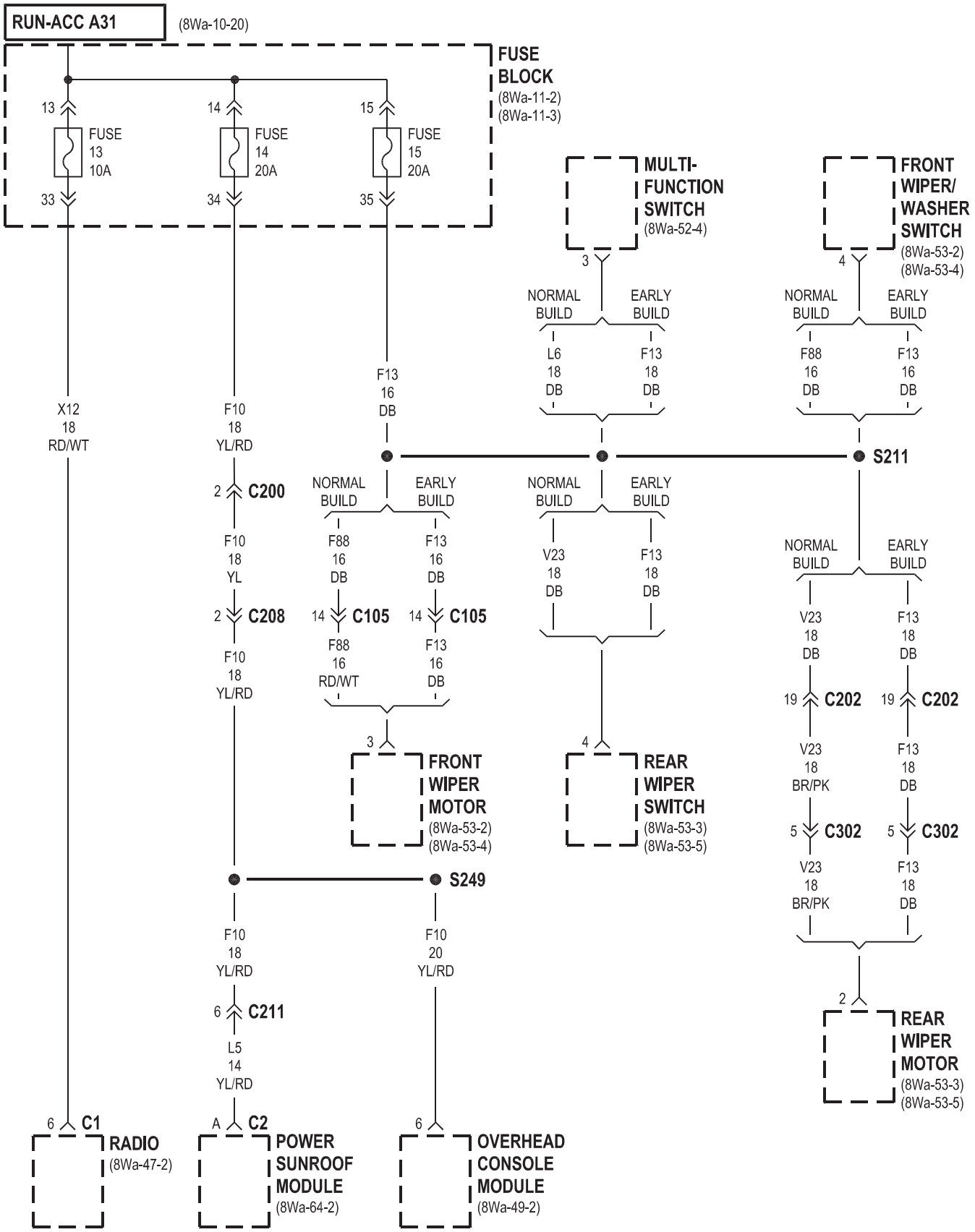
RUN-ACC A31
(8Wa-10-20)
FUSE BLOCK
(8Wa-11-2)
(8Wa-11-3)
13
14
15
FUSE 13 10A
FUSE 14 20A
FUSE 15 20A
33
34
35
MULTI-FUNCTION SWITCH
(8Wa-52-4)
FRONT WIPER/ WASHER SWITCH
(8Wa-53-2)
(8Wa-53-4)
3
4
NORMAL BUILD
EARLY BUILD
L6 18 DB
F13 18 DB
F88 16 DB
F13 16 DB
X12 18 RD/WT
F10 18 YL/RD
F13 16 DB
S211
2
C200
F10 18 YL
2
C208
F10 18 YL/RD
14
C105
F88 16 RD/WT
F13 16 DB
V23 18 DB
F13 18 DB
19
C202
V23 18 BR/PK
5
C302
3
FRONT WIPER MOTOR
(8Wa-53-2)
(8Wa-53-4)
REAR WIPER SWITCH
(8Wa-53-3)
(8Wa-53-5)
S249
F10 18 YL/RD
F10 20 YL/RD
6
C211
L5 14 YL/RD
REAR WIPER MOTOR
(8Wa-53-3)
(8Wa-53-5)
A
C1
RADIO
(8Wa-47-2)
C2
POWER SUNROOF MODULE
(8Wa-64-2)
OVERHEAD CONSOLE MODULE
(8Wa-49-2)

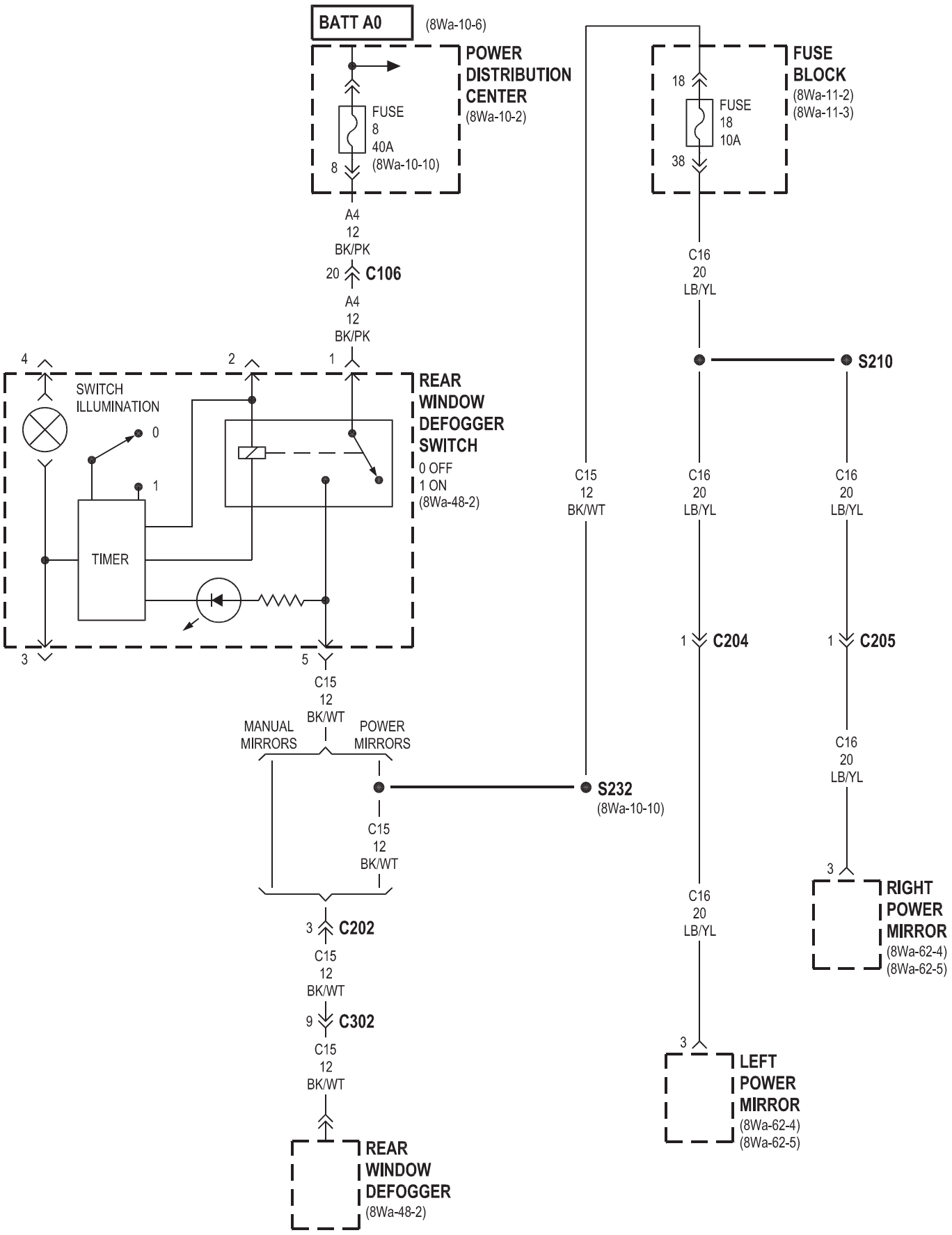
BATT A0
(8Wa-10-6)
POWER DISTRIBUTION CENTER
(8Wa-10-2)
FUSE 8 40A
(8Wa-10-10)
8
A4 12 BK/PK
20
C106
A4 12 BK/PK
FUSE BLOCK
(8Wa-11-2)
(8Wa-11-3)
18
FUSE 18 10A
38
C16 20 LB/YL
S210
4
2
1
SWITCH ILLUMINATION
0
1
TIMER
REAR WINDOW DEFOGGER SWITCH
0 OFF
1 ON
(8Wa-48-2)
3
5
C15 12 BK/WT
C15 12 BK/WT
C16 20 LB/YL
C16 20 LB/YL
1
C204
1
C205
C15 12 BK/WT
MANUAL MIRRORS
POWER MIRRORS
S232
(8Wa-10-10)
C16 20 LB/YL
3
RIGHT POWER MIRROR
(8Wa-62-4)
(8Wa-62-5)
C15 12 BK/WT
3
C202
C15 12 BK/WT
9
C302
C15 12 BK/WT
C16 20 LB/YL
3
LEFT POWER MIRROR
(8Wa-62-4)
(8Wa-62-5)
REAR WINDOW DEFOGGER
(8Wa-48-2)

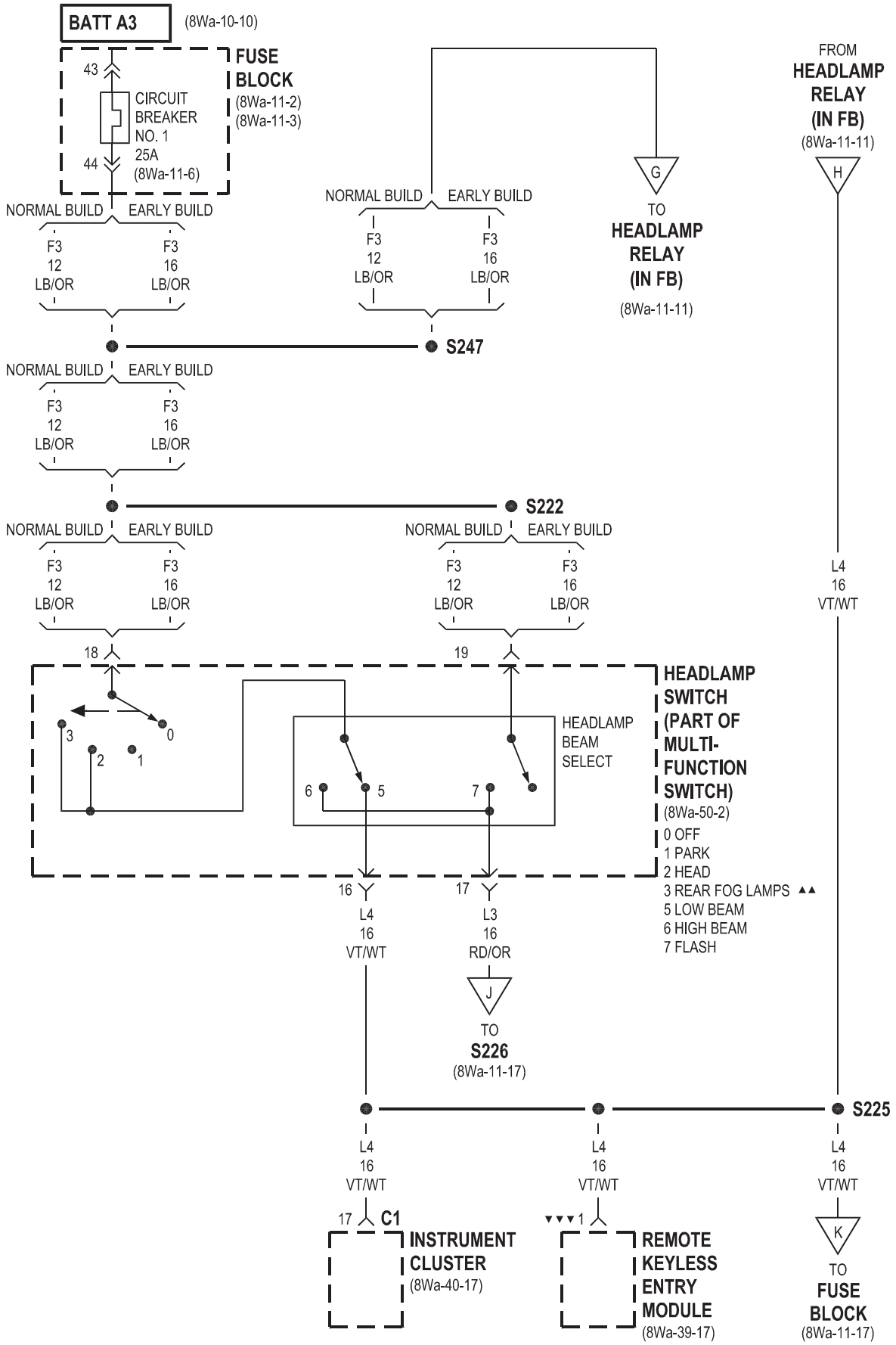

▼▼▼ EXCEPT NORMAL BUILD BUILT-UP-EXPORT
▲▲ BUILT-UP-EXPORT

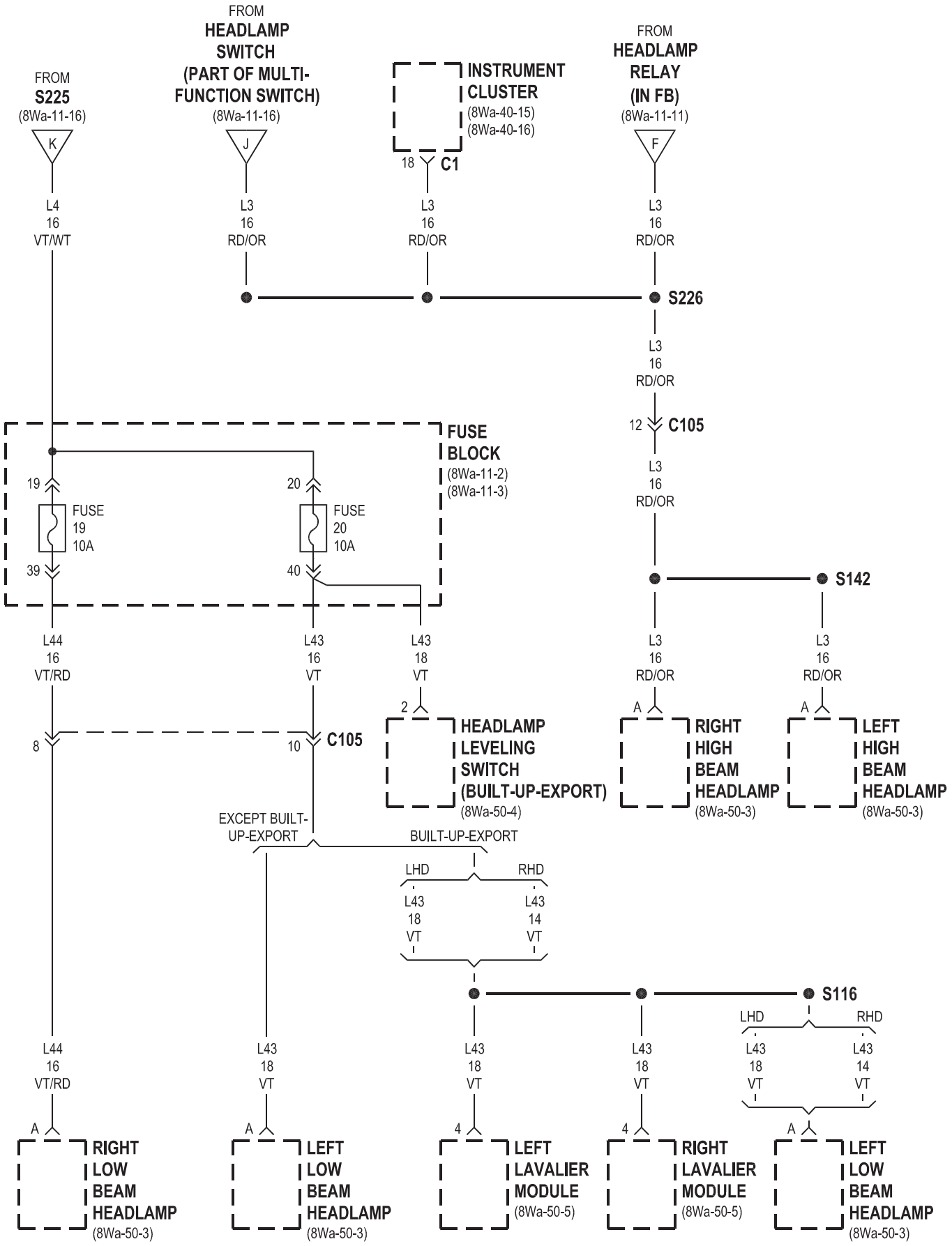
FROM
S225
(8Wa-11-16)
K
L4
16
VT/WT
FROM
HEADLAMP
SWITCH
(PART OF MULTI-
FUNCTION SWITCH)
(8Wa-11-16)
J
L3
16
RD/OR
INSTRUMENT
CLUSTER
(8Wa-40-15)
(8Wa-40-16)
18
C1
L3
16
RD/OR
FROM
HEADLAMP
RELAY
(IN FB)
(8Wa-11-11)
F
L3
16
RD/OR
S226
L3
16
RD/OR
12
C105
L3
16
RD/OR
FUSE
BLOCK
(8Wa-11-2)
(8Wa-11-3)
19
20
FUSE
19
10A
FUSE
20
10A
39
40
S142
L44
16
VT/RD
L43
16
VT
L43
18
VT
L3
16
RD/OR
L3
16
RD/OR
2
A
A
8
10
C105
HEADLAMP
LEVELING
SWITCH
(BUILT-UP-EXPORT)
(8Wa-50-4)
RIGHT
HIGH
BEAM
HEADLAMP
(8Wa-50-3)
LEFT
HIGH
BEAM
HEADLAMP
(8Wa-50-3)
EXCEPT BUILT-
UP-EXPORT
BUILT-UP-EXPORT
LHD
RHD
L43
18
VT
L43
14
VT
S116
LHD
RHD
L44
16
VT/RD
L43
18
VT
L43
18
VT
L43
18
VT
L43
18
VT
L43
14
VT
A
A
4
4
A
RIGHT
LOW
BEAM
HEADLAMP
(8Wa-50-3)
LEFT
LOW
BEAM
HEADLAMP
(8Wa-50-3)
LEFT
LAVALIER
MODULE
(8Wa-50-5)
RIGHT
LAVALIER
MODULE
(8Wa-50-5)
LEFT
LOW
BEAM
HEADLAMP
(8Wa-50-3)

2001 PT CRUISER

8W-15 GROUND DISTRIBUTION

Component	Page
A/C Compressor Clutch	8Wa-15-4, 10
A/C Compressor Clutch Relay	8Wa-15-4, 10
A/C- Heater Control Switch	8Wa-15-17, 22
Battery	8Wa-15-2, 8
Brake Lamp Switch	8Wa-15-3, 12
Brake Warning Indicator Switch	8Wa-15-3, 12
Center High Mounted Stop Lamp	8Wa-15-24
Center Stack Lamp	8Wa-15-14, 20
Cigar Lighter	8Wa-15-17, 22
Clockspring	8Wa-15-13, 19
Clutch Pedal Position Switch	8Wa-15-3, 12
Controller Antilock Brake	8Wa-15-5, 10
Data Link Connector	8Wa-15-2, 8
Diode	8Wa-15-4, 10
Dome Lamp/Intrusion Sensor	8Wa-15-13, 19
Driver Cylinder Lock Switch	8Wa-15-14, 20
Driver Door Lock Switch	8Wa-15-14, 20
Driver Door Power Lock Motor/Ajar Switch	8Wa-15-14, 20
Driver Heated Seat Cushion	8Wa-15-15
Driver Heated Seat Module	8Wa-15-15
Driver Heated Seat Switch	8Wa-15-15
Driver Seat Belt Switch	8Wa-15-24, 25
Front Power Window Switch	8Wa-15-17, 22
Front Wiper Motor	8Wa-15-4, 11
Front Wiper/Washer Switch	8Wa-15-16, 21
Fuel Pump Module	8Wa-15-7, 11, 12
G100	8Wa-15-2, 8
G101	8Wa-15-2, 8
G102	8Wa-15-2, 3, 8
G103	8Wa-15-4, 5, 9, 10
G104	8Wa-15-6, 7, 11, 12
G105	8Wa-15-7, 12
G200	8Wa-15-13, 19
G201	8Wa-15-16, 21
G202	8Wa-15-17, 22
G203	8Wa-15-17, 22
G204	8Wa-15-18, 23
G300	8Wa-15-24
G301	8Wa-15-24
G302	8Wa-15-25
G303	8Wa-15-25
G304	8Wa-15-25
Headlamp Leveling Switch	8Wa-15-14, 20
Headlamp Relay	8Wa-15-16, 21
Heated Seat Relay	8Wa-15-16, 21
High Note Horn	8Wa-15-7, 11
Hood Ajar Switch	8Wa-15-3, 8
Instrument Cluster	8Wa-15-13, 16, 19, 21
Left Back-Up Lamp	8Wa-15-25
Left Fog Lamp	8Wa-15-5, 9
Left Front Door Ajar Switch	8Wa-15-14, 20
Left Front Park/Turn Signal Lamp	8Wa-15-5, 9
Left Front Side Marker	8Wa-15-5, 9
Left High Beam Headlamp	8Wa-15-5, 9
Left Lavalier Module	8Wa-15-5, 9
Left License Lamp	8Wa-15-25
Left Low Beam Headlamp	8Wa-15-5, 9
Left Power Mirror	8Wa-15-14, 23
Left Rear Fog Lamp	8Wa-15-25
Left Rear Power Window Switch	8Wa-15-17, 22
Left Rear Turn Signal Lamp	8Wa-15-25
Left Side Impact Airbag Control Module	8Wa-15-25
Left Tail/Stop Lamp	8Wa-15-25
Left Turn Signal Indicator	8Wa-15-16, 21
Left Visor/Vanity Lamp	8Wa-15-18, 23
License Lamp	8Wa-15-25
Liftgate Ajar Switch	8Wa-15-24
Liftgate Cylinder Lock Switch	8Wa-15-24
Low Note Horn	8Wa-15-7, 11
Map/Reading Lamps	8Wa-15-18, 23
Multi- Function Switch	8Wa-15-13, 16, 19, 21
Occupant Restraint Controller	8Wa-15-17, 22
Overhead Console Module	8Wa-15-13, 18, 19, 23
Oxygen Sensor 1/2 Downstream	8Wa-15-4, 10
Passenger Cylinder Lock Switch	8Wa-15-18, 23
Passenger Door Lock Switch	8Wa-15-18, 23
Passenger Door Power Lock Motor/Ajar Switch	8Wa-15-18, 23
Passenger Heated Seat Cushion	8Wa-15-15
Passenger Heated Seat Module	8Wa-15-15
Passenger Heated Seat Switch	8Wa-15-15
Passenger Seat Belt Switch	8Wa-15-24, 25
Power Mirror Switch	8Wa-15-16, 21
Power Outlet	8Wa-15-17, 22
Power Seat Switch	8Wa-15-15, 16, 21
Power Steering Pressure Switch	8Wa-15-3, 12
Power Sunroof Module	8Wa-15-18, 23
Powertrain Control Module	8Wa-15-2, 8
Radiator Fan Motor	8Wa-15-7, 12
Radio	8Wa-15-13, 19
Rear Power Outlet	8Wa-15-24
Rear Power Window Switch	8Wa-15-17, 22
Rear Window Defogger	8Wa-15-24
Rear Window Defogger Switch	8Wa-15-14, 20
Rear Wiper Motor	8Wa-15-24
Rear Wiper Switch	8Wa-15-14, 20
Remote Keyless Entry Module	8Wa-15-13, 16, 19, 21
Right Back-Up Lamp	8Wa-15-25
Right Fog Lamp	8Wa-15-6, 11
Right Front Door Ajar Switch	8Wa-15-18, 23
Right Front Park/Turn Signal Lamp	8Wa-15-6, 11
Right Front Side Marker	8Wa-15-6, 11
Right High Beam Headlamp	8Wa-15-6, 11
Right Lavalier Module	8Wa-15-6, 11, 25
Right Low Beam Headlamp	8Wa-15-6, 11
Right Power Mirror	8Wa-15-18, 20
Right Rear Fog Lamp	8Wa-15-25
Right Rear Power Window Switch	8Wa-15-17, 22
Right Rear Turn Signal Lamp	8Wa-15-24
Right Side Impact Airbag Control Module	8Wa-15-25
Right Tail/Stop Lamp	8Wa-15-24
Right Turn Signal Indicator	8Wa-15-16, 21
Right Visor/Vanity Lamp	8Wa-15-18, 23
Sentry Key Immobilizer Module	8Wa-15-13, 19
Siren	8Wa-15-4, 10
Speed Control Servo	8Wa-15-7, 11
Traction Control Switch	8Wa-15-14, 20
Transmission Control Module	8Wa-15-3, 8
Transmission Control Relay	8Wa-15-4, 10
Transmission Range Indicator Illumination	8Wa-15-16, 21

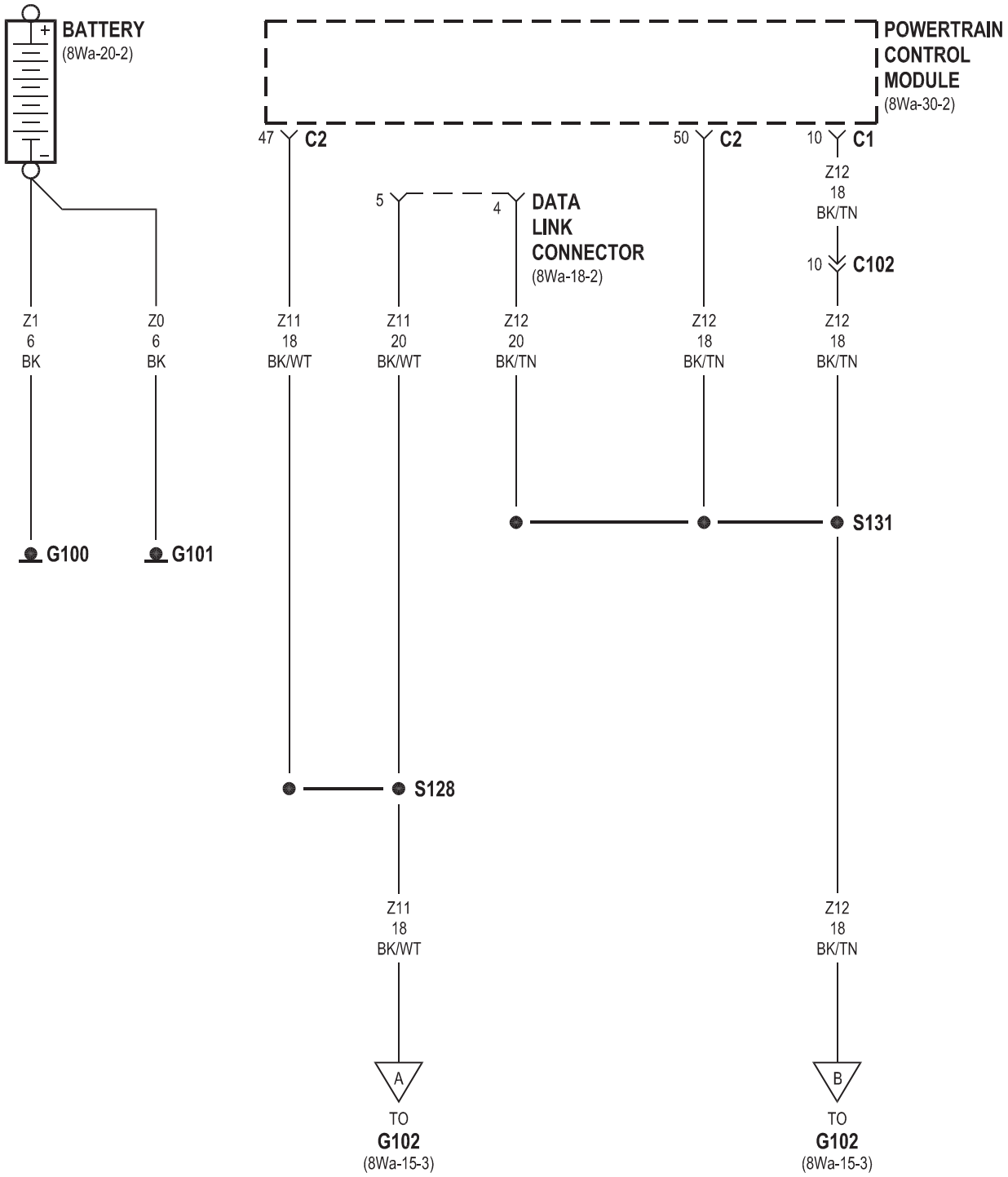
BATTERY
(8Wa-20-2)
POWERTRAIN CONTROL MODULE
(8Wa-30-2)
47 C2
50 C2
10 C1
Z12
18
BK/TN
10 C102
5
4
DATA LINK CONNECTOR
(8Wa-18-2)
Z1
6
BK
Z0
6
BK
Z11
18
BK/WT
Z11
20
BK/WT
Z12
20
BK/TN
Z12
18
BK/TN
Z12
18
BK/TN
G100
G101
S131
S128
Z11
18
BK/WT
Z12
18
BK/TN
A
B
TO
G102
(8Wa-15-3)
TO
G102
(8Wa-15-3)

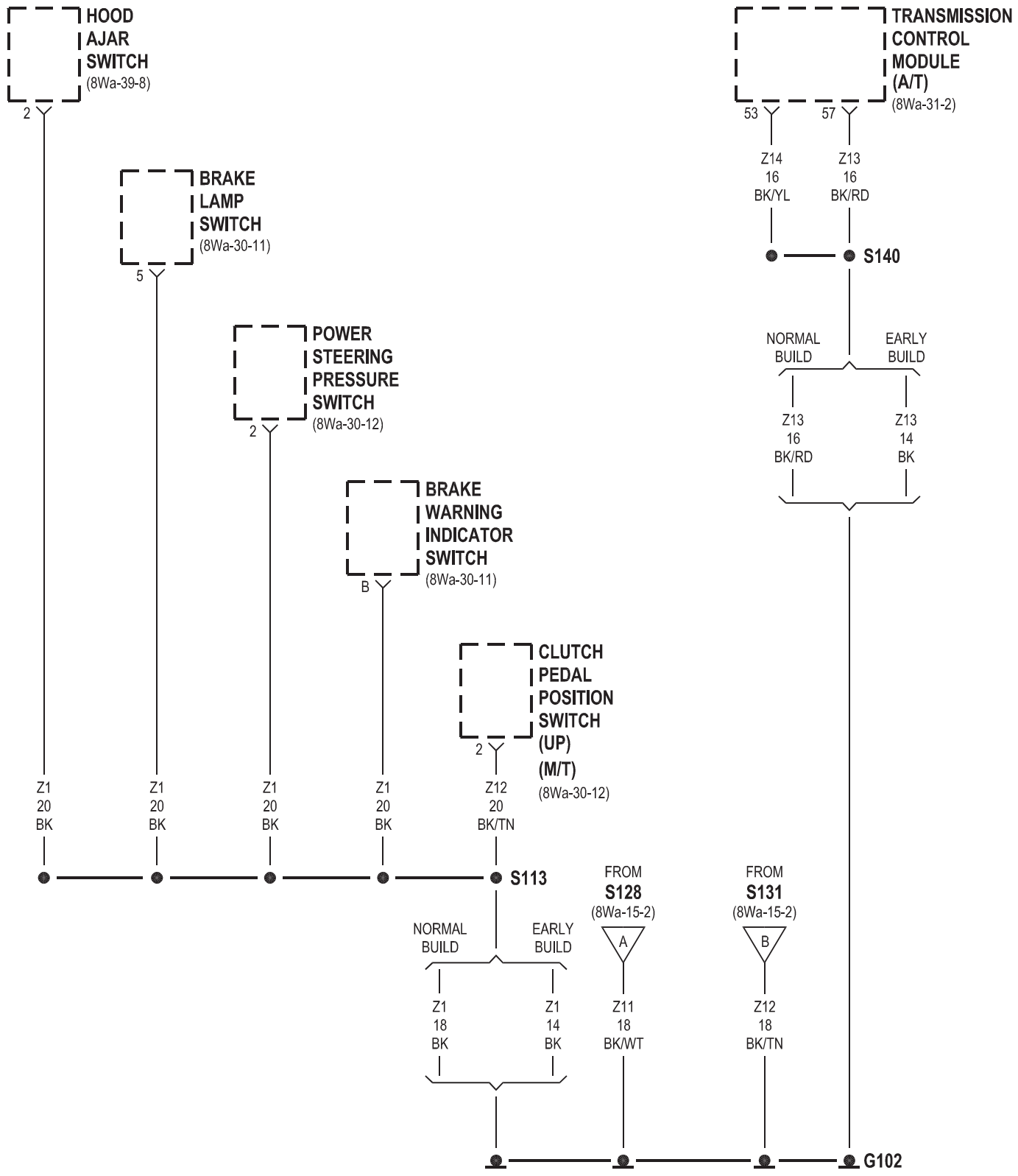
HOOD AJAR SWITCH (8Wa-39-8)
2
BRAKE LAMP SWITCH (8Wa-30-11)
5
POWER STEERING PRESSURE SWITCH (8Wa-30-12)
2
BRAKE WARNING INDICATOR SWITCH (8Wa-30-11)
B
CLUTCH PEDAL POSITION SWITCH (UP) (M/T) (8Wa-30-12)
2
TRANSMISSION CONTROL MODULE (A/T) (8Wa-31-2)
53
57
Z14 16 BK/YL
Z13 16 BK/RD
S140
NORMAL BUILD
EARLY BUILD
Z13 16 BK/RD
Z13 14 BK
Z1 20 BK
Z1 20 BK
Z1 20 BK
Z1 20 BK
Z12 20 BK/TN
S113
NORMAL BUILD
EARLY BUILD
Z1 18 BK
Z1 14 BK
FROM S128 (8Wa-15-2)
A
Z11 18 BK/WT
FROM S131 (8Wa-15-2)
B
Z12 18 BK/TN
G102

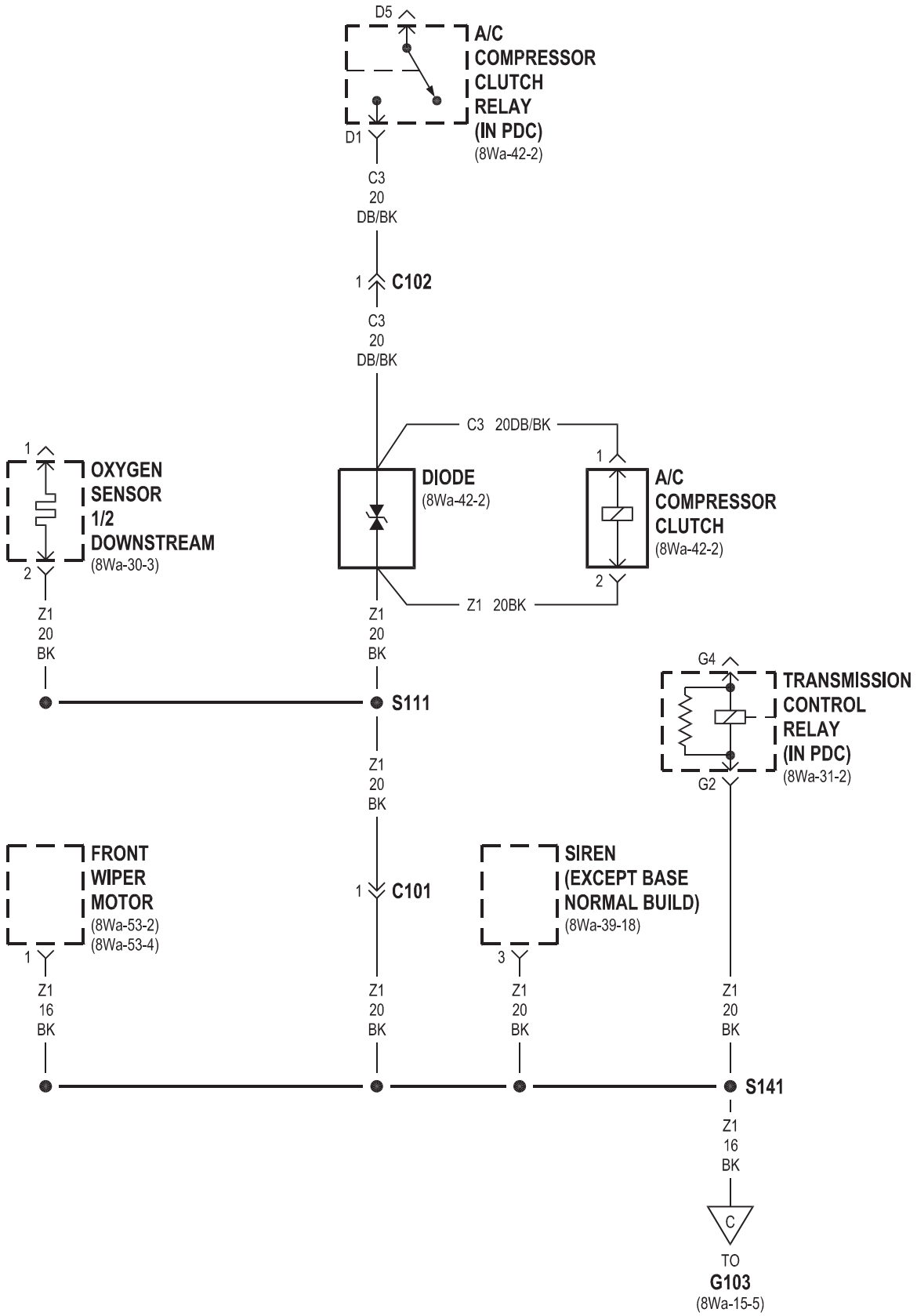
D5
A/C COMPRESSOR CLUTCH RELAY (IN PDC)
(8Wa-42-2)
D1
C3 20 DB/BK
1
C102
C3 20 DB/BK
C3 20DB/BK
1
OXYGEN SENSOR 1/2 DOWNSTREAM
(8Wa-30-3)
2
DIODE
(8Wa-42-2)
1
A/C COMPRESSOR CLUTCH
(8Wa-42-2)
2
Z1 20BK
Z1 20 BK
Z1 20 BK
S111
G4
TRANSMISSION CONTROL RELAY (IN PDC)
(8Wa-31-2)
G2
Z1 20 BK
FRONT WIPER MOTOR
(8Wa-53-2)
(8Wa-53-4)
1
1
C101
SIREN (EXCEPT BASE NORMAL BUILD)
(8Wa-39-18)
3
Z1 16 BK
Z1 20 BK
Z1 20 BK
Z1 20 BK
S141
Z1 16 BK
C
TO
G103
(8Wa-15-5)

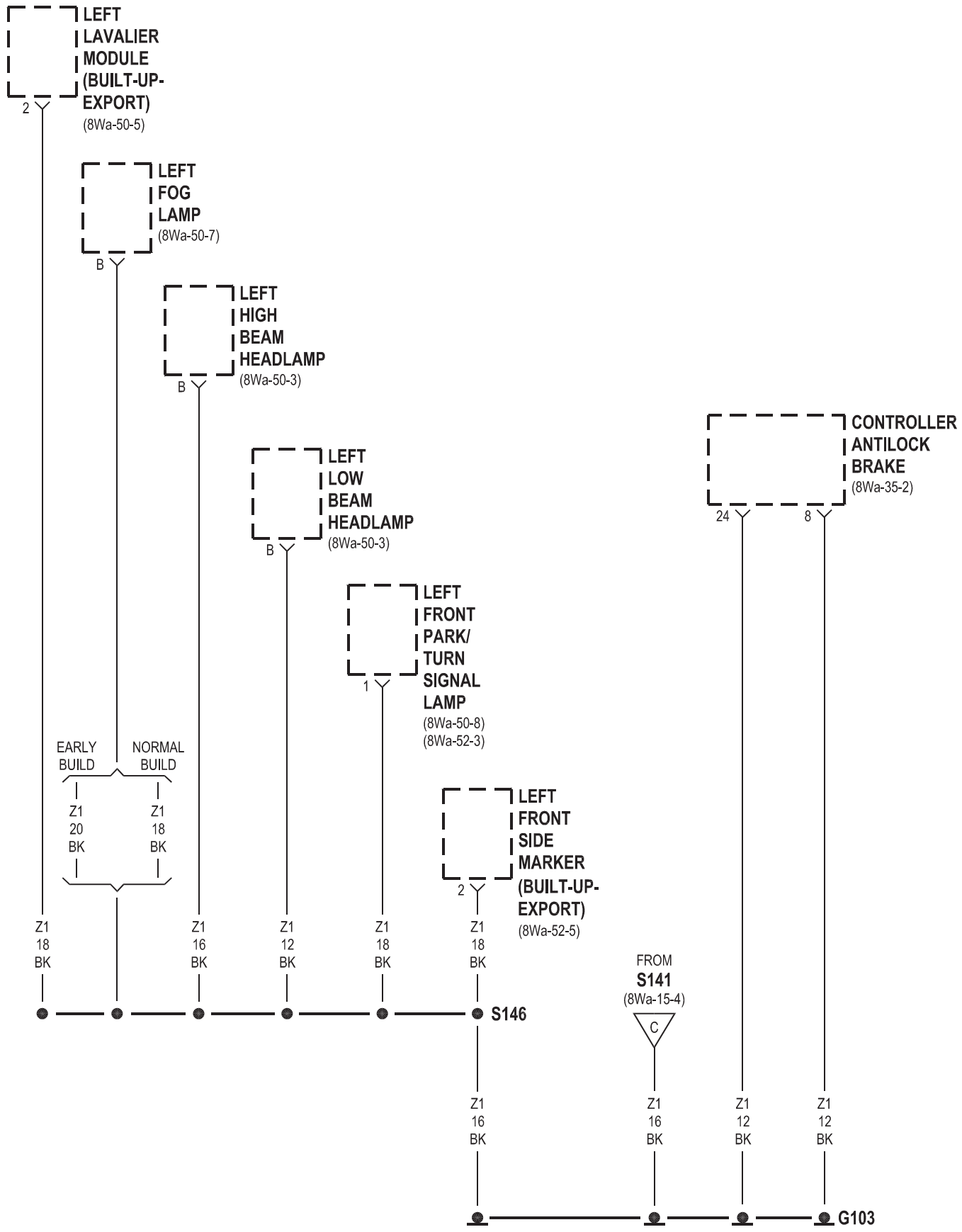
LEFT LAVALIER MODULE (BUILT-UP-EXPORT)
(8Wa-50-5)
2
LEFT FOG LAMP
(8Wa-50-7)
B
LEFT HIGH BEAM HEADLAMP
(8Wa-50-3)
B
LEFT LOW BEAM HEADLAMP
(8Wa-50-3)
B
LEFT FRONT PARK/ TURN SIGNAL LAMP
(8Wa-50-8)
(8Wa-52-3)
1
CONTROLLER ANTILOCK BRAKE
(8Wa-35-2)
24
8
EARLY BUILD
NORMAL BUILD
Z1 20 BK
Z1 18 BK
LEFT FRONT SIDE MARKER (BUILT-UP-EXPORT)
(8Wa-52-5)
2
Z1 18 BK
Z1 16 BK
Z1 12 BK
Z1 18 BK
Z1 18 BK
S146
FROM
S141
(8Wa-15-4)
C
Z1 16 BK
Z1 16 BK
Z1 12 BK
Z1 12 BK
G103

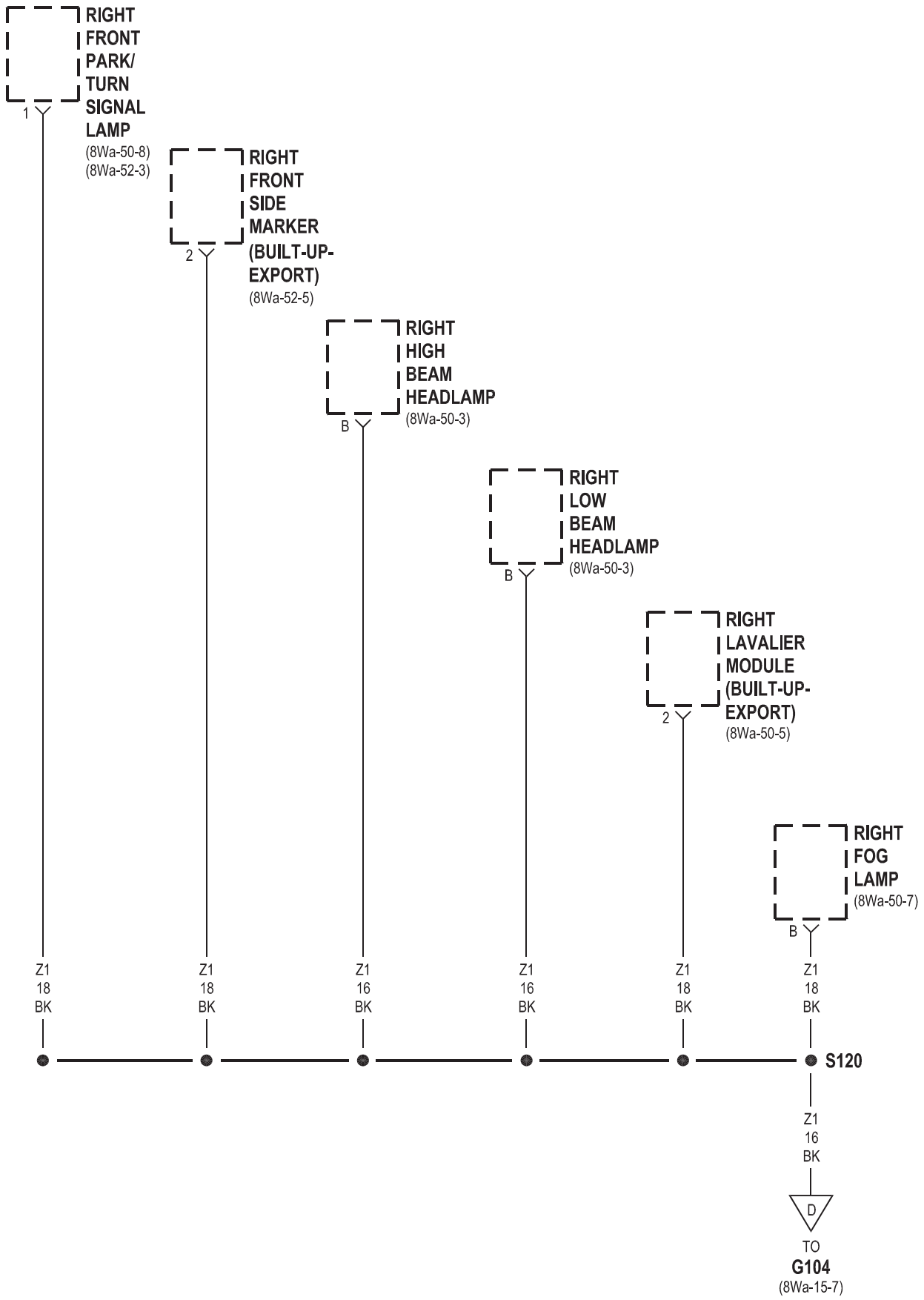
RIGHT FRONT PARK/ TURN SIGNAL LAMP
(8Wa-50-8)
(8Wa-52-3)
1
RIGHT FRONT SIDE MARKER (BUILT-UP-EXPORT)
(8Wa-52-5)
2
RIGHT HIGH BEAM HEADLAMP
(8Wa-50-3)
B
RIGHT LOW BEAM HEADLAMP
(8Wa-50-3)
B
RIGHT LAVALIER MODULE (BUILT-UP-EXPORT)
(8Wa-50-5)
2
RIGHT FOG LAMP
(8Wa-50-7)
B
Z1 18 BK
Z1 18 BK
Z1 16 BK
Z1 16 BK
Z1 18 BK
Z1 18 BK
S120
Z1 16 BK
D
TO
G104
(8Wa-15-7)

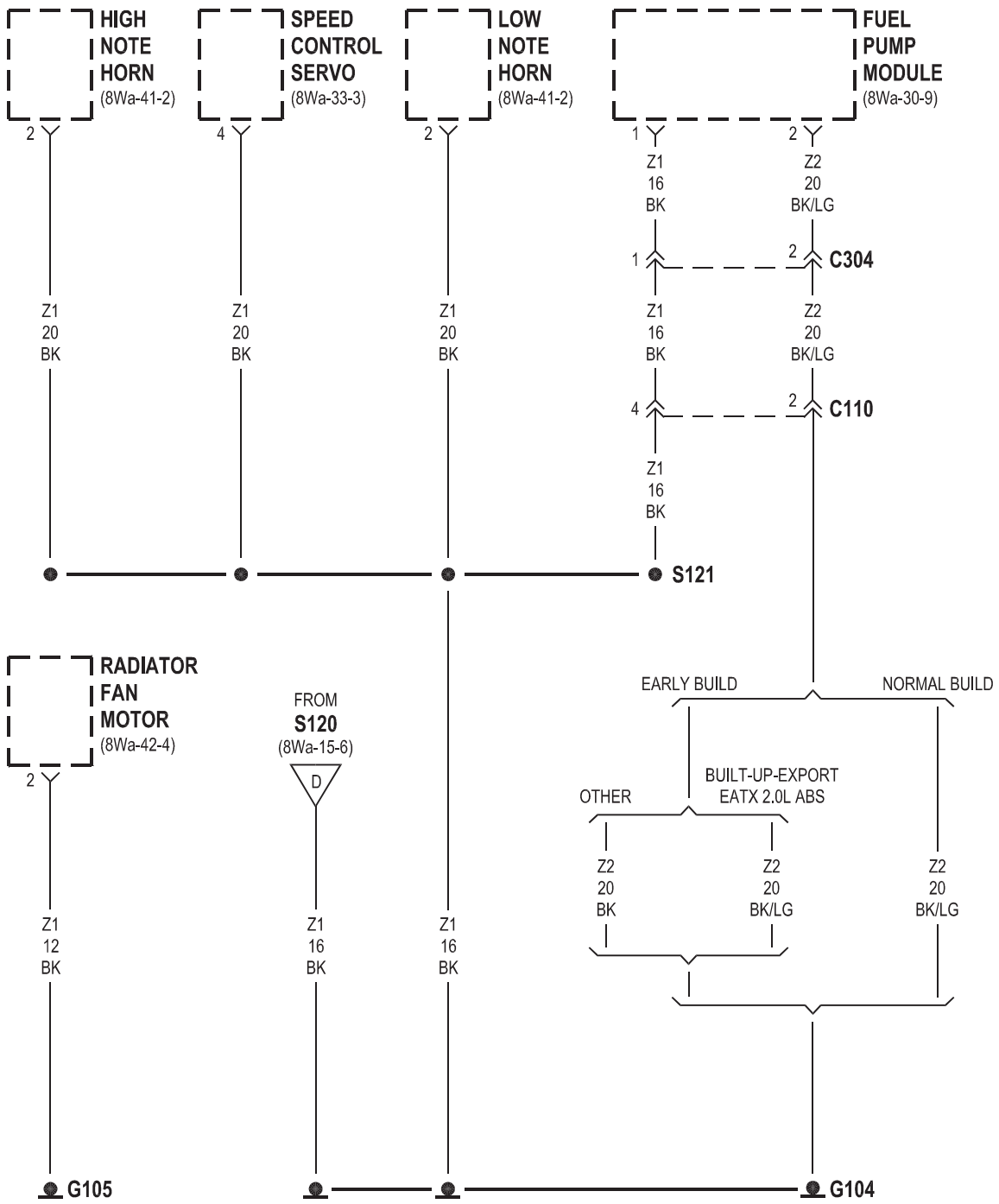
HIGH NOTE HORN
(8Wa-41-2)
SPEED CONTROL SERVO
(8Wa-33-3)
LOW NOTE HORN
(8Wa-41-2)
FUEL PUMP MODULE
(8Wa-30-9)
2
4
2
1
2
Z1 16 BK
Z2 20 BK/LG
1
2
C304
Z1 20 BK
Z1 20 BK
Z1 20 BK
Z1 16 BK
Z2 20 BK/LG
4
2
C110
Z1 16 BK
S121
RADIATOR FAN MOTOR
(8Wa-42-4)
FROM
S120
(8Wa-15-6)
D
EARLY BUILD
NORMAL BUILD
OTHER
BUILT-UP-EXPORT EATX 2.0L ABS
2
Z2 20 BK
Z2 20 BK/LG
Z2 20 BK/LG
Z1 12 BK
Z1 16 BK
Z1 16 BK
G105
G104

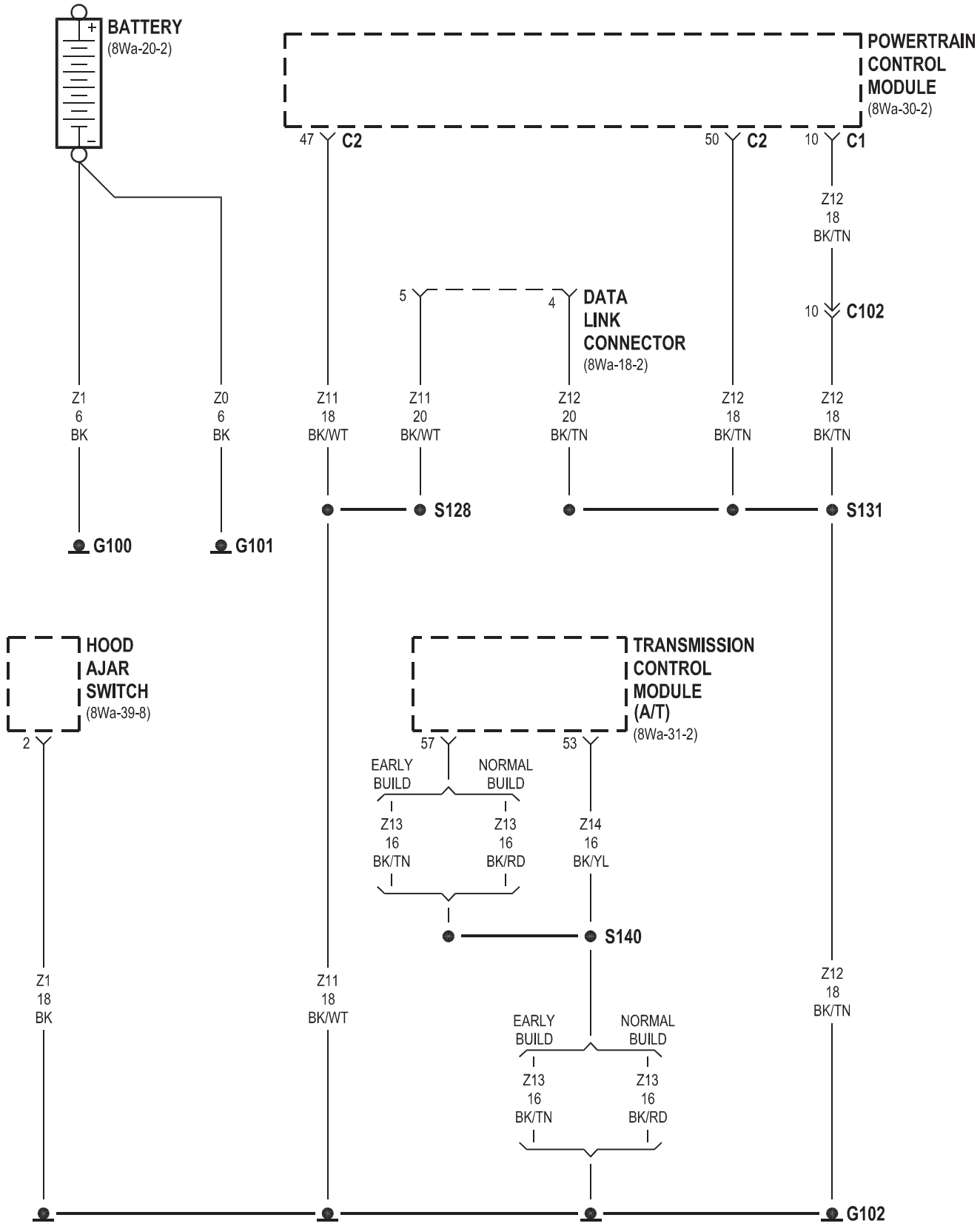
BATTERY
(8Wa-20-2)
POWERTRAIN CONTROL MODULE
(8Wa-30-2)
47 C2
50 C2
10 C1
Z12 18 BK/TN
10 C102
5
4
DATA LINK CONNECTOR
(8Wa-18-2)
Z1 6 BK
Z0 6 BK
Z11 18 BK/WT
Z11 20 BK/WT
Z12 20 BK/TN
Z12 18 BK/TN
Z12 18 BK/TN
S128
S131
G100
G101
HOOD AJAR SWITCH
(8Wa-39-8)
2
TRANSMISSION CONTROL MODULE (A/T)
(8Wa-31-2)
57
53
EARLY BUILD
NORMAL BUILD
Z13 16 BK/TN
Z13 16 BK/RD
Z14 16 BK/YL
S140
Z1 18 BK
Z11 18 BK/WT
Z12 18 BK/TN
EARLY BUILD
NORMAL BUILD
Z13 16 BK/TN
Z13 16 BK/RD
G102

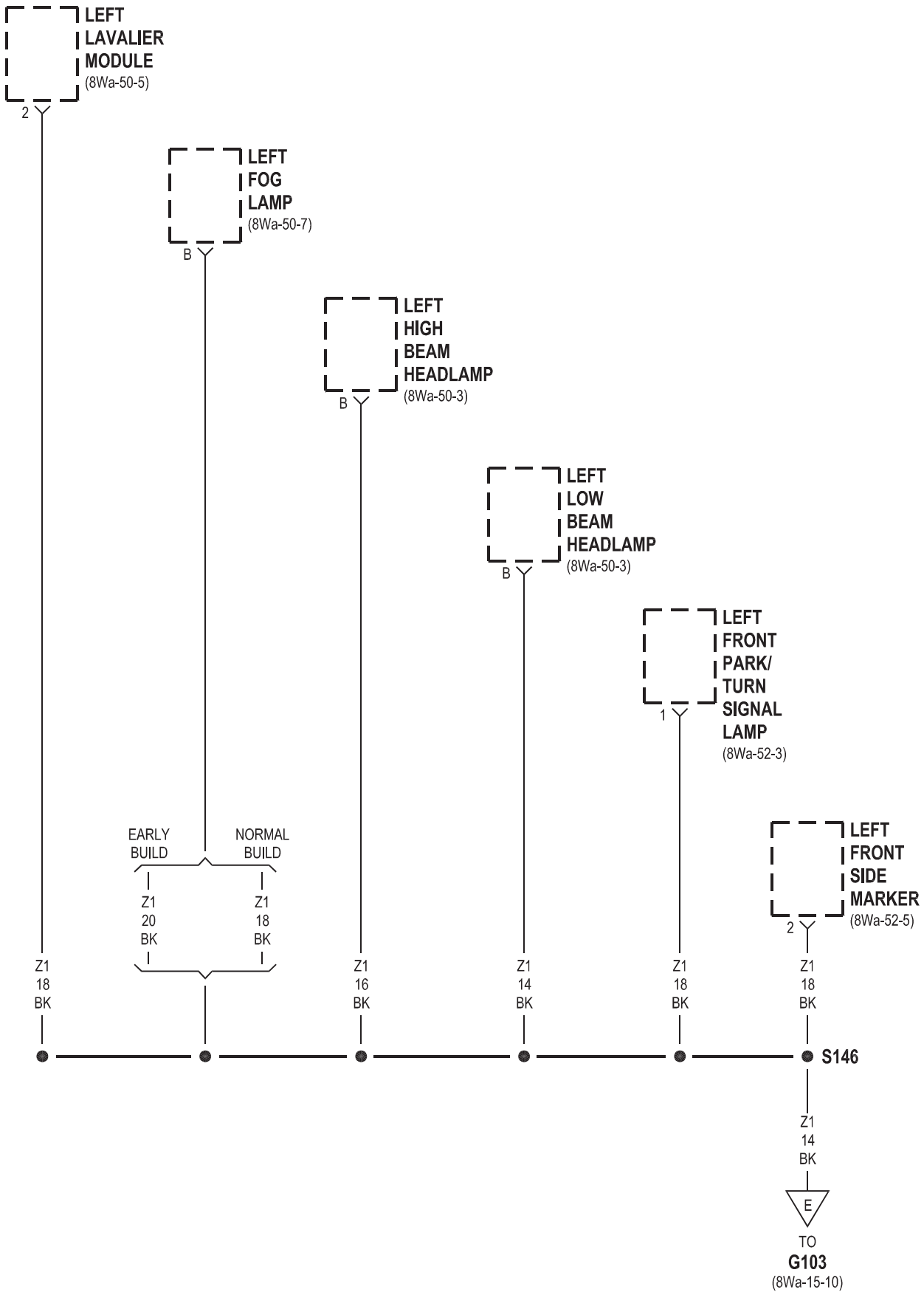
LEFT LAVALIER MODULE (8Wa-50-5)
2
LEFT FOG LAMP (8Wa-50-7)
B
LEFT HIGH BEAM HEADLAMP (8Wa-50-3)
B
LEFT LOW BEAM HEADLAMP (8Wa-50-3)
B
LEFT FRONT PARK/ TURN SIGNAL LAMP (8Wa-52-3)
1
LEFT FRONT SIDE MARKER (8Wa-52-5)
2
EARLY BUILD
NORMAL BUILD
Z1 20 BK
Z1 18 BK
Z1 18 BK
Z1 16 BK
Z1 14 BK
Z1 18 BK
Z1 18 BK
S146
Z1 14 BK
E
TO G103 (8Wa-15-10)

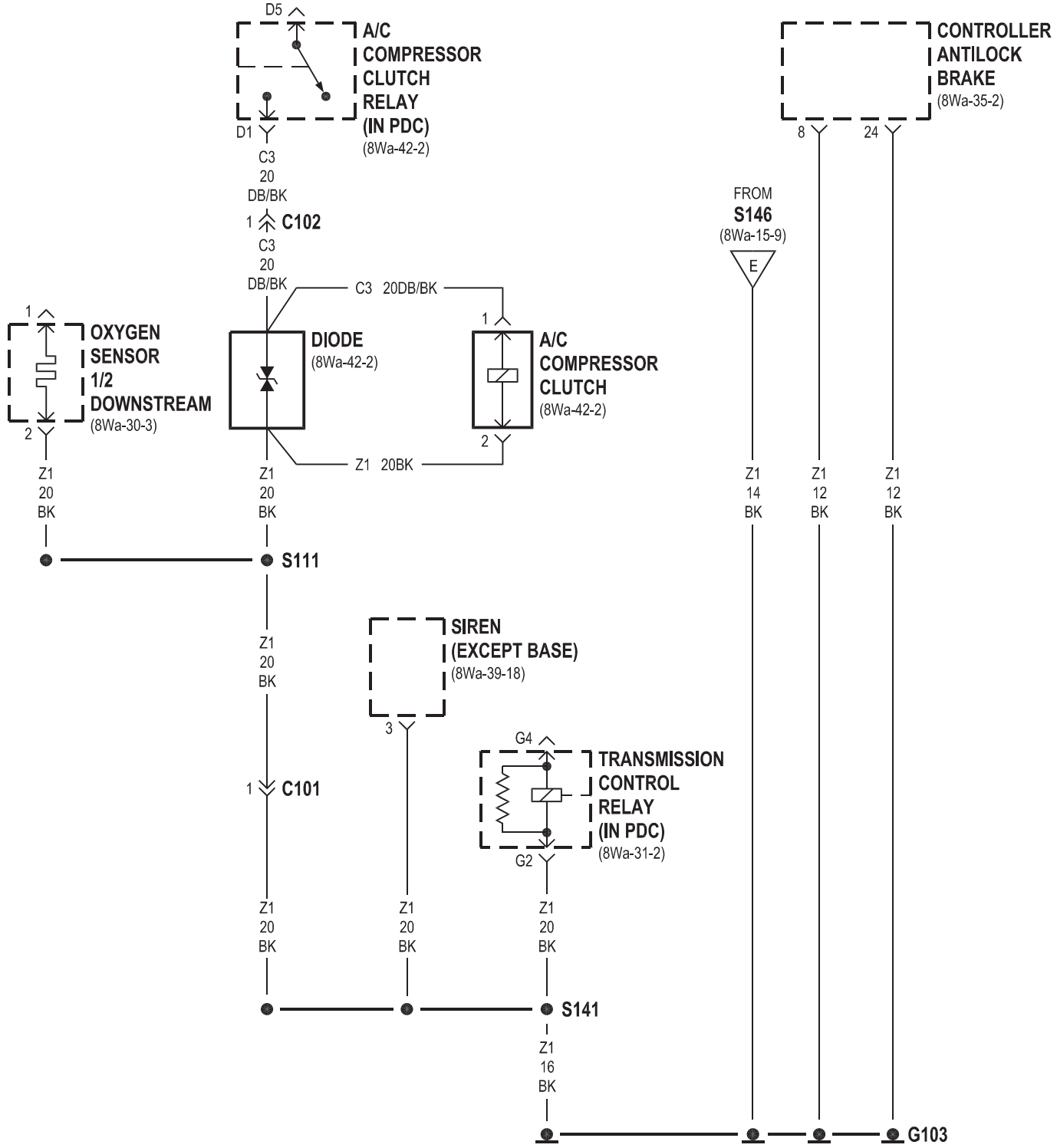
D5
A/C COMPRESSOR CLUTCH RELAY (IN PDC)
(8Wa-42-2)
D1
C3 20 DB/BK
1
C102
C3 20 DB/BK
C3 20DB/BK
CONTROLLER ANTILOCK BRAKE
(8Wa-35-2)
8
24
FROM S146
(8Wa-15-9)
E
1
OXYGEN SENSOR 1/2 DOWNSTREAM
(8Wa-30-3)
2
DIODE
(8Wa-42-2)
1
A/C COMPRESSOR CLUTCH
(8Wa-42-2)
2
Z1 20BK
Z1 20 BK
Z1 20 BK
Z1 14 BK
Z1 12 BK
Z1 12 BK
S111
Z1 20 BK
SIREN (EXCEPT BASE)
(8Wa-39-18)
3
G4
TRANSMISSION CONTROL RELAY (IN PDC)
(8Wa-31-2)
G2
1
C101
Z1 20 BK
Z1 20 BK
Z1 20 BK
S141
Z1 16 BK
G103

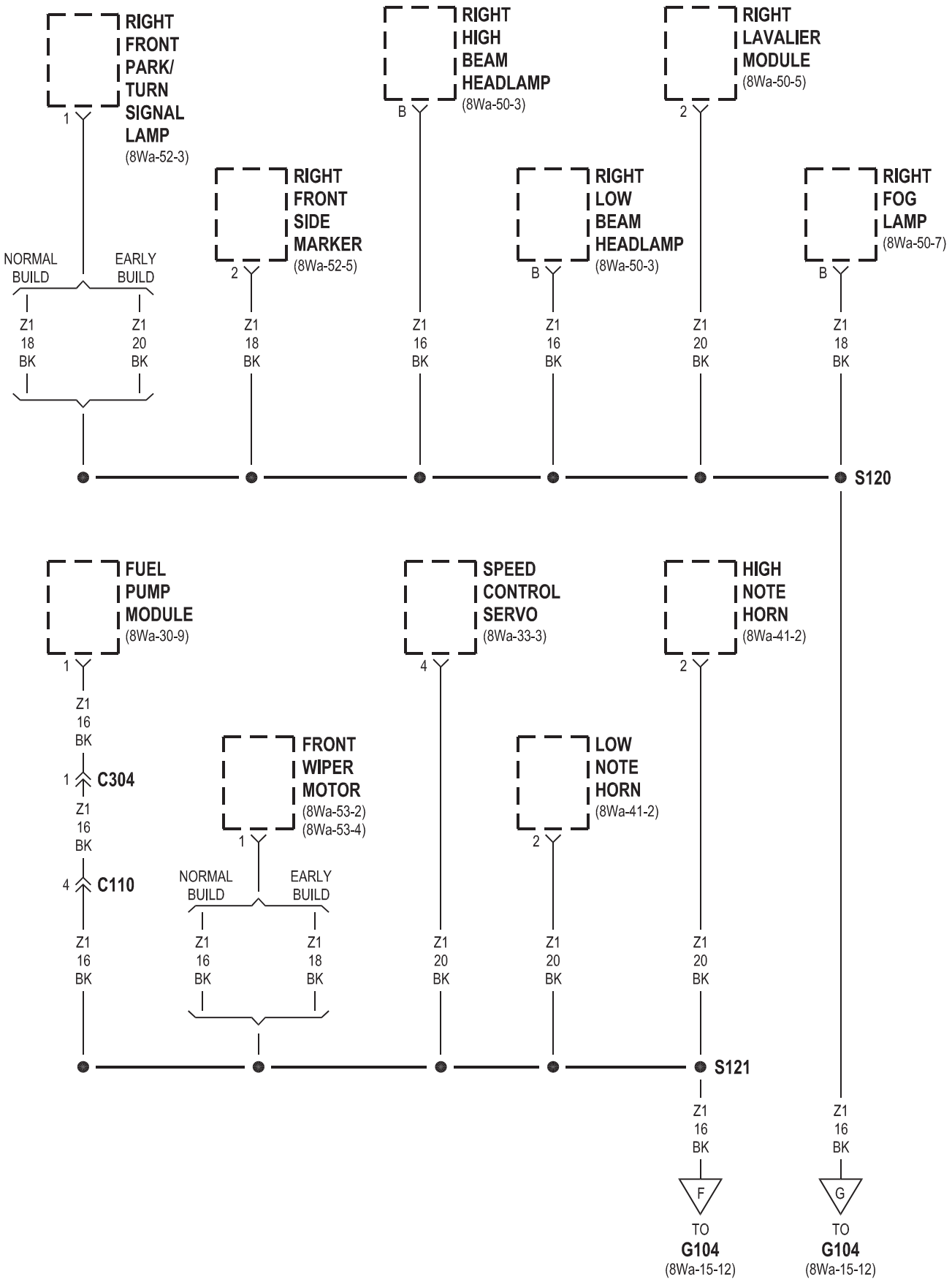
RIGHT FRONT PARK/ TURN SIGNAL LAMP (8Wa-52-3)
1
RIGHT HIGH BEAM HEADLAMP (8Wa-50-3)
B
RIGHT LAVALIER MODULE (8Wa-50-5)
2
RIGHT FRONT SIDE MARKER (8Wa-52-5)
2
RIGHT LOW BEAM HEADLAMP (8Wa-50-3)
B
RIGHT FOG LAMP (8Wa-50-7)
B
NORMAL BUILD
EARLY BUILD
Z1 18 BK
Z1 20 BK
Z1 18 BK
Z1 16 BK
Z1 16 BK
Z1 20 BK
Z1 18 BK
S120
FUEL PUMP MODULE (8Wa-30-9)
1
SPEED CONTROL SERVO (8Wa-33-3)
4
HIGH NOTE HORN (8Wa-41-2)
2
Z1 16 BK
1 C304
Z1 16 BK
4 C110
Z1 16 BK
FRONT WIPER MOTOR (8Wa-53-2) (8Wa-53-4)
1
LOW NOTE HORN (8Wa-41-2)
2
NORMAL BUILD
EARLY BUILD
Z1 16 BK
Z1 18 BK
Z1 20 BK
Z1 20 BK
Z1 20 BK
S121
Z1 16 BK
Z1 16 BK
F
G
TO G104 (8Wa-15-12)
TO G104 (8Wa-15-12)

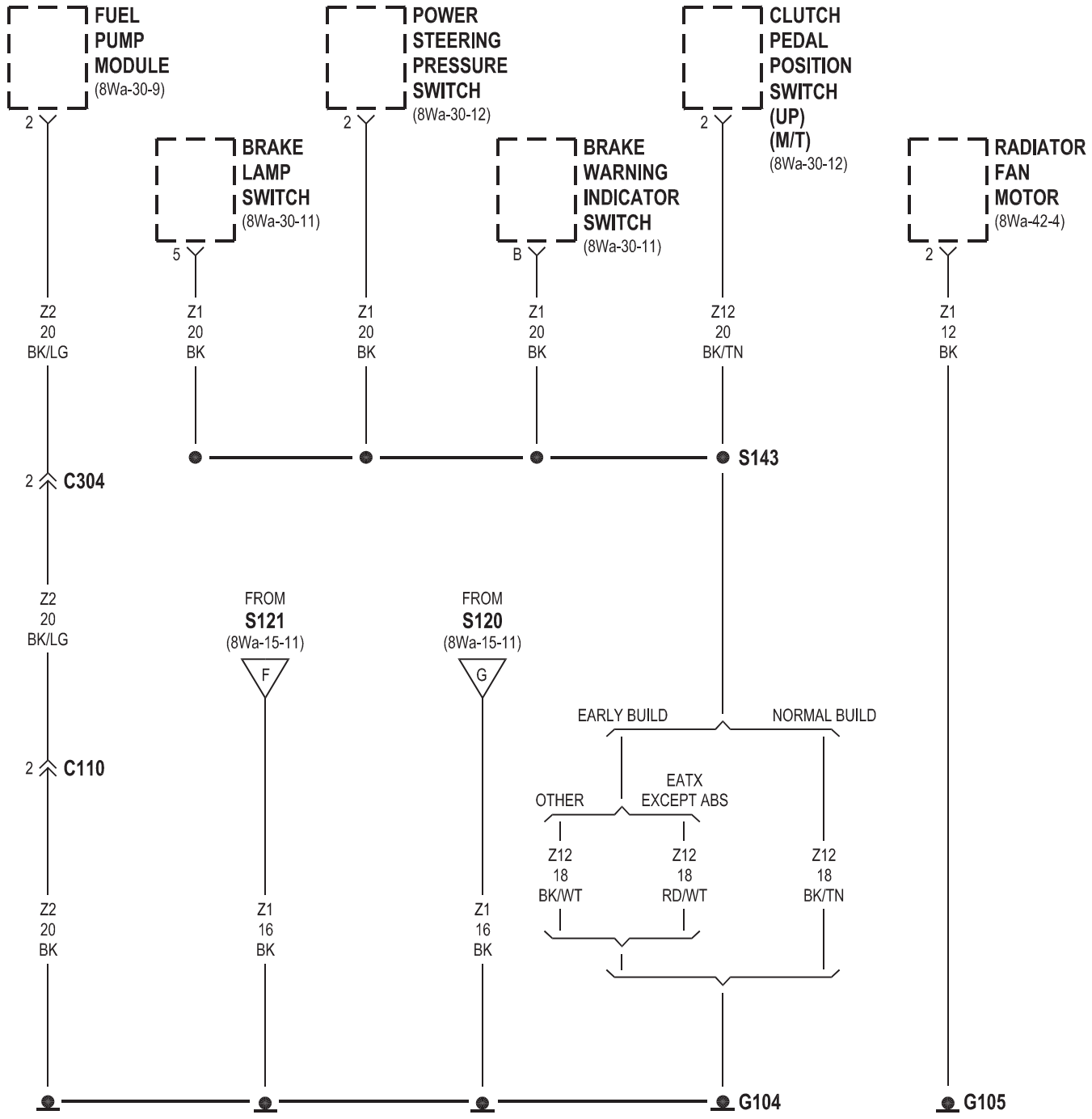
FUEL PUMP MODULE
(8Wa-30-9)
2
POWER STEERING PRESSURE SWITCH
(8Wa-30-12)
2
CLUTCH PEDAL POSITION SWITCH (UP) (M/T)
(8Wa-30-12)
2
BRAKE LAMP SWITCH
(8Wa-30-11)
5
BRAKE WARNING INDICATOR SWITCH
(8Wa-30-11)
B
RADIATOR FAN MOTOR
(8Wa-42-4)
2
Z2 20 BK/LG
Z1 20 BK
Z1 20 BK
Z1 20 BK
Z12 20 BK/TN
Z1 12 BK
S143
2 C304
Z2 20 BK/LG
FROM S121
(8Wa-15-11)
F
FROM S120
(8Wa-15-11)
G
EARLY BUILD
NORMAL BUILD
2 C110
OTHER
EATX EXCEPT ABS
Z12 18 BK/WT
Z12 18 RD/WT
Z12 18 BK/TN
Z2 20 BK
Z1 16 BK
Z1 16 BK
G104
G105

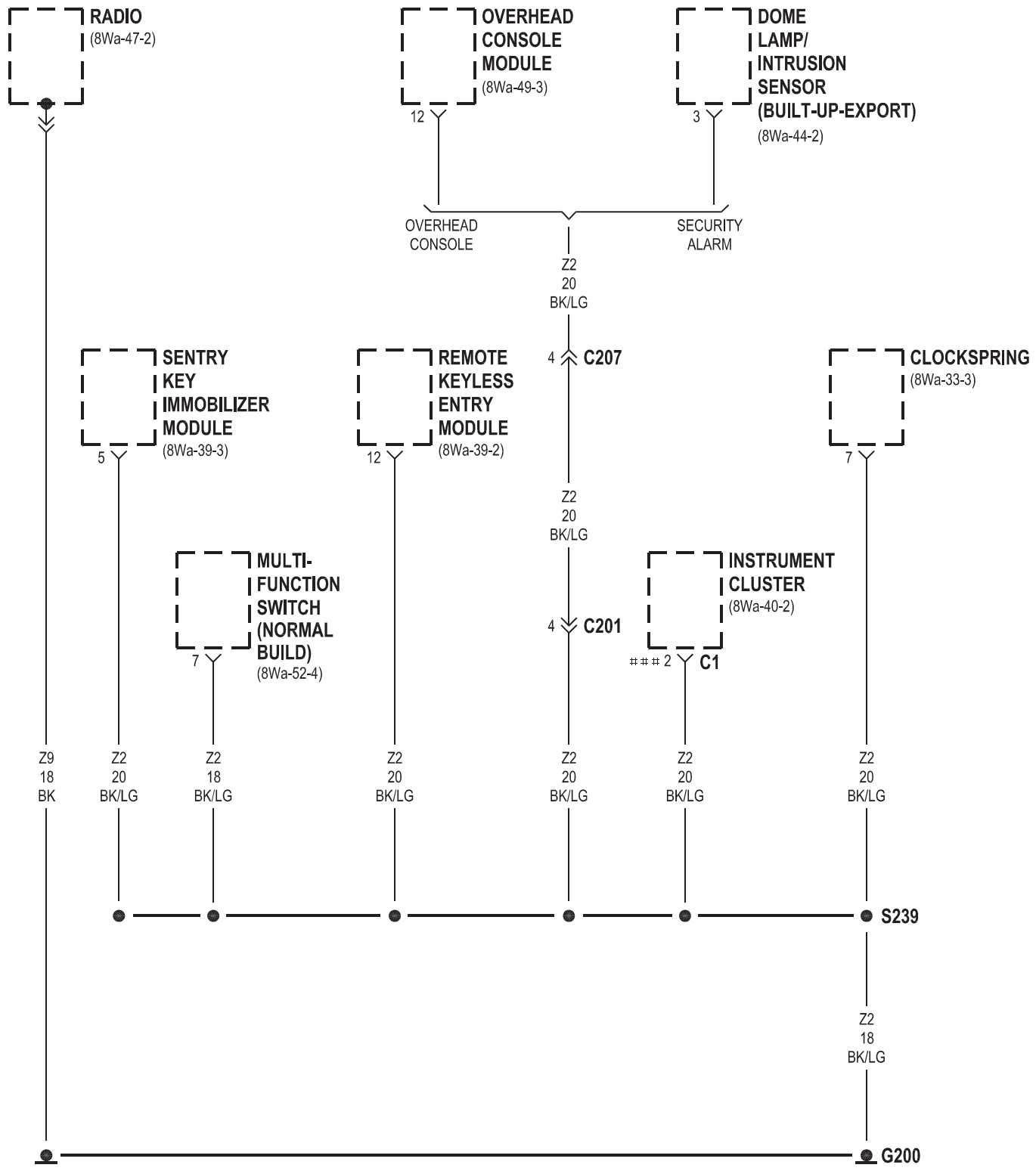

NORMAL BUILD

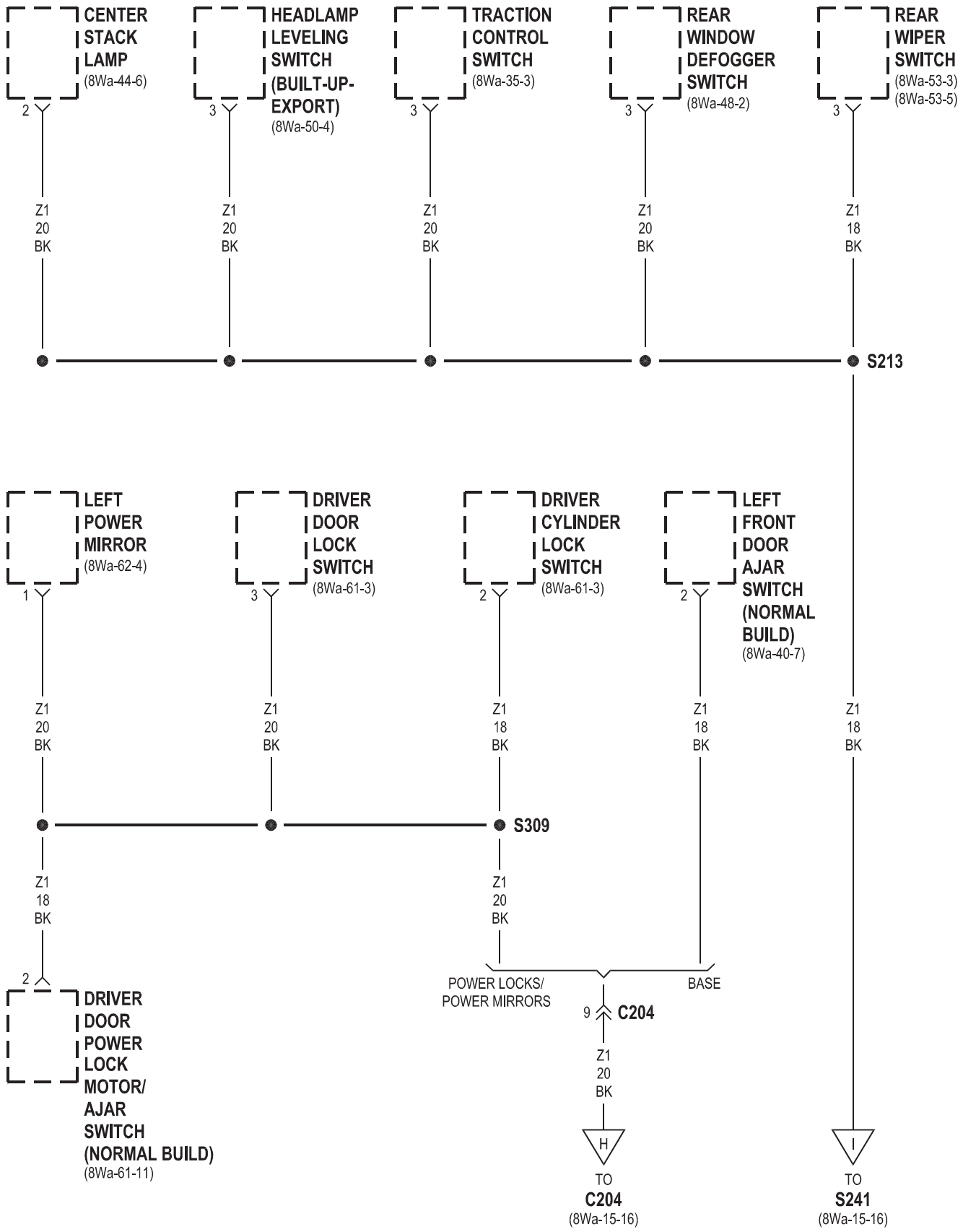
CENTER STACK LAMP (8Wa-44-6)
HEADLAMP LEVELING SWITCH (BUILT-UP-EXPORT) (8Wa-50-4)
TRACTION CONTROL SWITCH (8Wa-35-3)
REAR WINDOW DEFOGGER SWITCH (8Wa-48-2)
REAR WIPER SWITCH (8Wa-53-3) (8Wa-53-5)
2
3
3
3
3
Z1 20 BK
Z1 20 BK
Z1 20 BK
Z1 20 BK
Z1 18 BK
S213
LEFT POWER MIRROR (8Wa-62-4)
DRIVER DOOR LOCK SWITCH (8Wa-61-3)
DRIVER CYLINDER LOCK SWITCH (8Wa-61-3)
LEFT FRONT DOOR AJAR SWITCH (NORMAL BUILD) (8Wa-40-7)
1
3
2
2
Z1 20 BK
Z1 20 BK
Z1 18 BK
Z1 18 BK
Z1 18 BK
S309
Z1 18 BK
Z1 20 BK
2
DRIVER DOOR POWER LOCK MOTOR/ AJAR SWITCH (NORMAL BUILD) (8Wa-61-11)
POWER LOCKS/ POWER MIRRORS
BASE
9
C204
Z1 20 BK
H
TO C204 (8Wa-15-16)
I
TO S241 (8Wa-15-16)

NORMAL BUILD HEATED SEATS

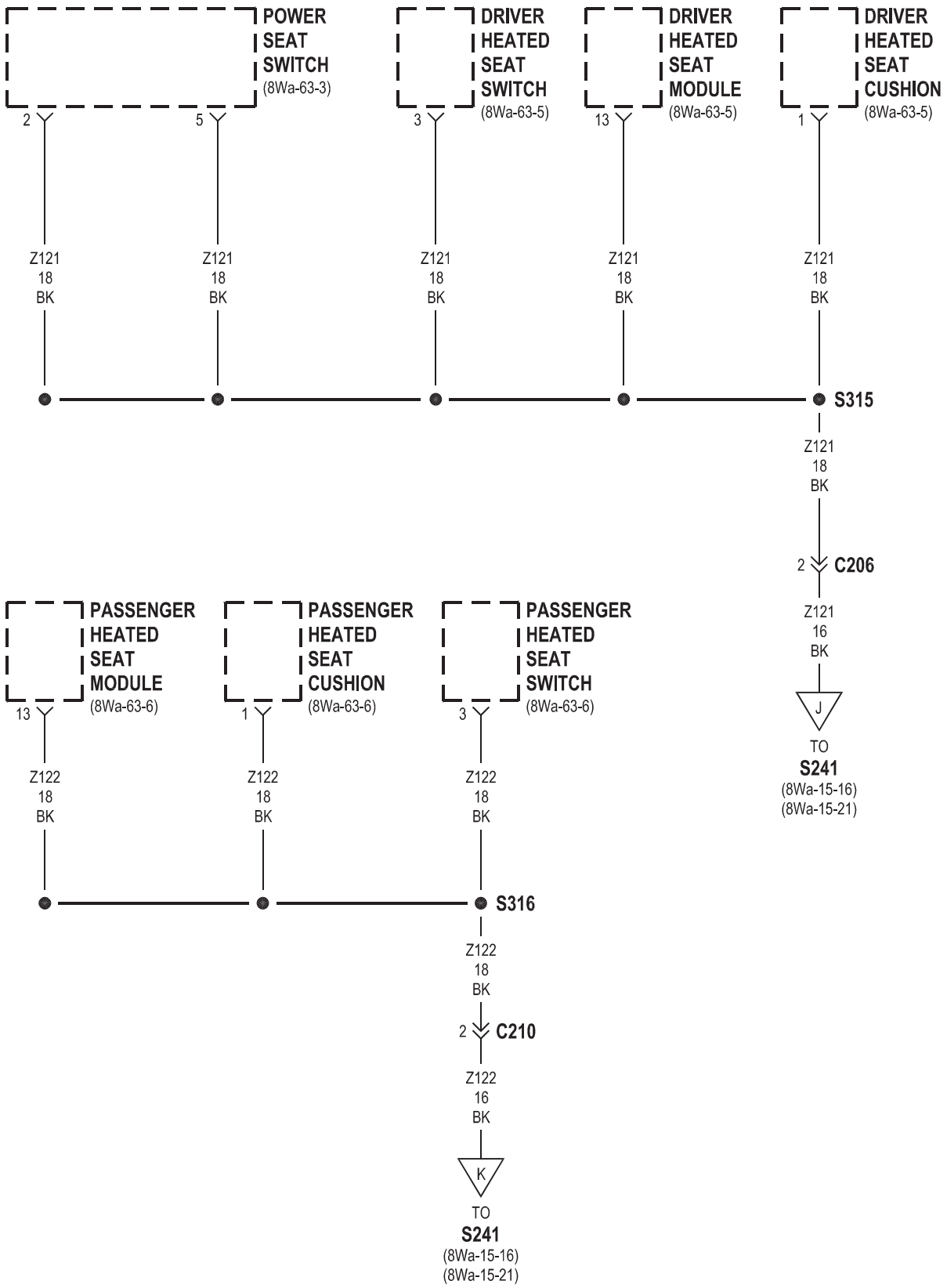

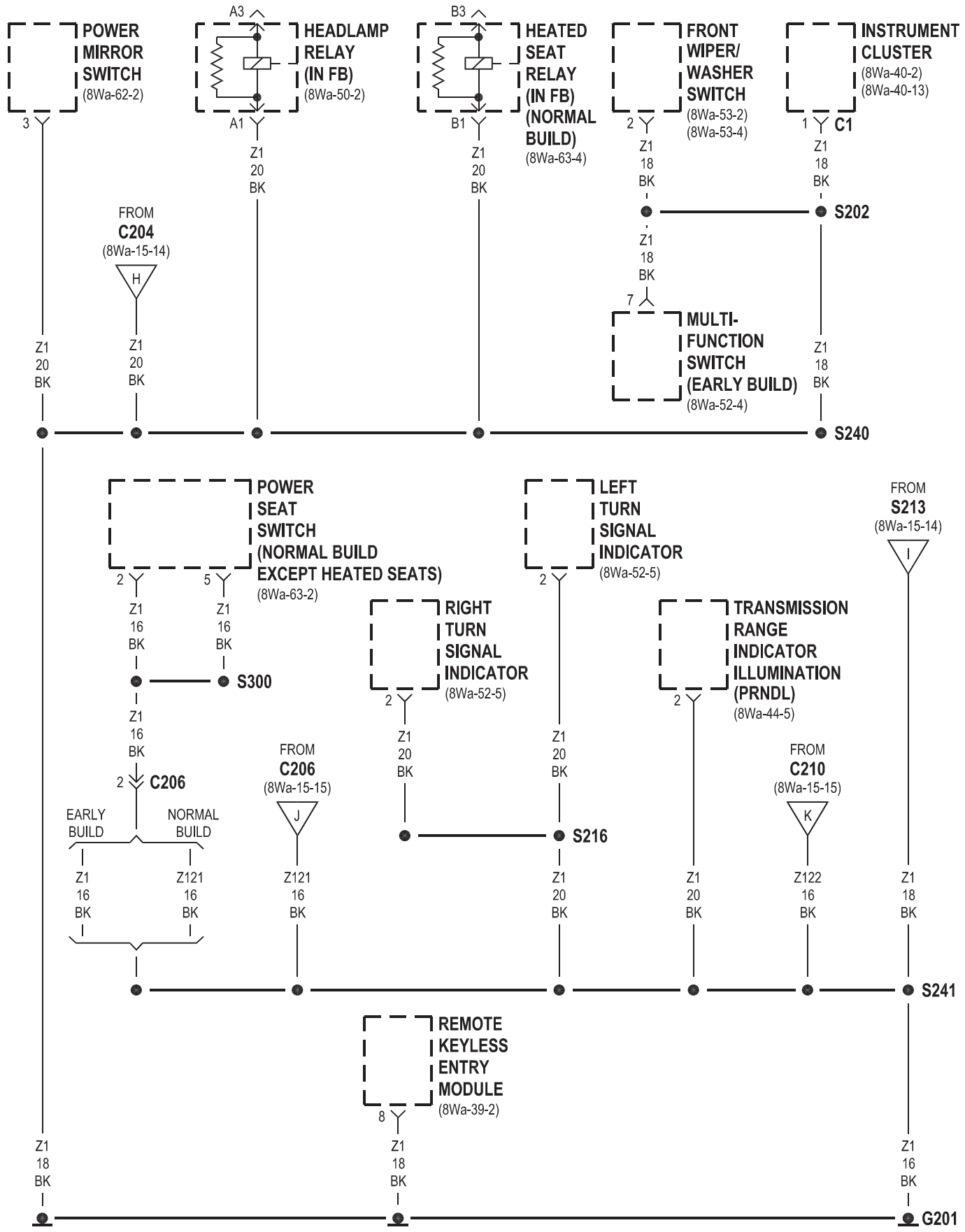
POWER MIRROR SWITCH (8Wa-62-2)
HEADLAMP RELAY (IN FB) (8Wa-50-2)
A3
A1
HEATED SEAT RELAY (IN FB) (NORMAL BUILD) (8Wa-63-4)
B3
B1
FRONT WIPER/ WASHER SWITCH (8Wa-53-2) (8Wa-53-4)
INSTRUMENT CLUSTER (8Wa-40-2) (8Wa-40-13)
C1
S202
MULTI-FUNCTION SWITCH (EARLY BUILD) (8Wa-52-4)
FROM C204 (8Wa-15-14)
S240
POWER SEAT SWITCH (NORMAL BUILD EXCEPT HEATED SEATS) (8Wa-63-2)
S300
C206
EARLY BUILD
NORMAL BUILD
FROM C206 (8Wa-15-15)
RIGHT TURN SIGNAL INDICATOR (8Wa-52-5)
S216
LEFT TURN SIGNAL INDICATOR (8Wa-52-5)
TRANSMISSION RANGE INDICATOR ILLUMINATION (PRNDL) (8Wa-44-5)
FROM C210 (8Wa-15-15)
FROM S213 (8Wa-15-14)
S241
REMOTE KEYLESS ENTRY MODULE (8Wa-39-2)
G201

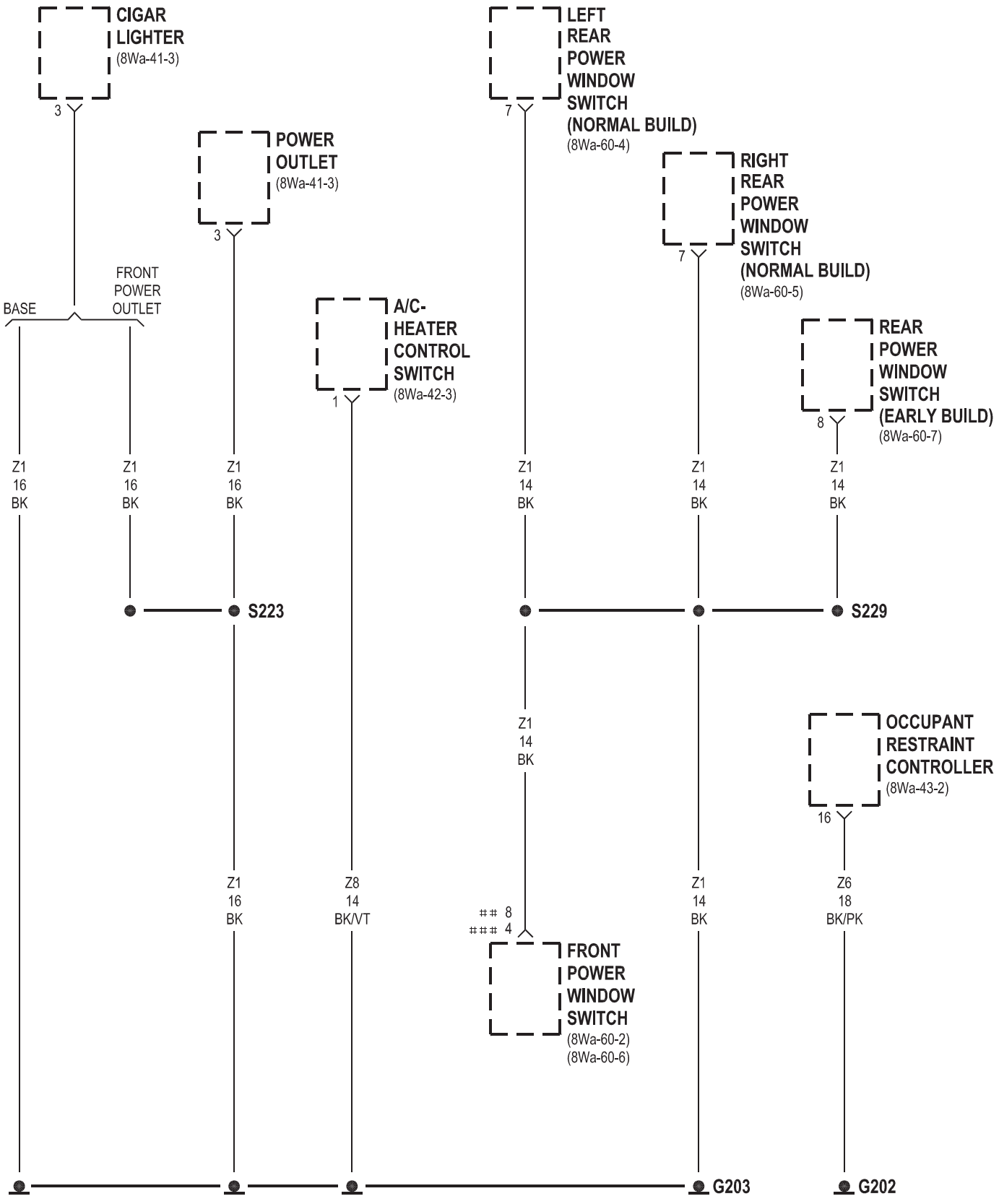

EARLY BUILD
NORMAL BUILD

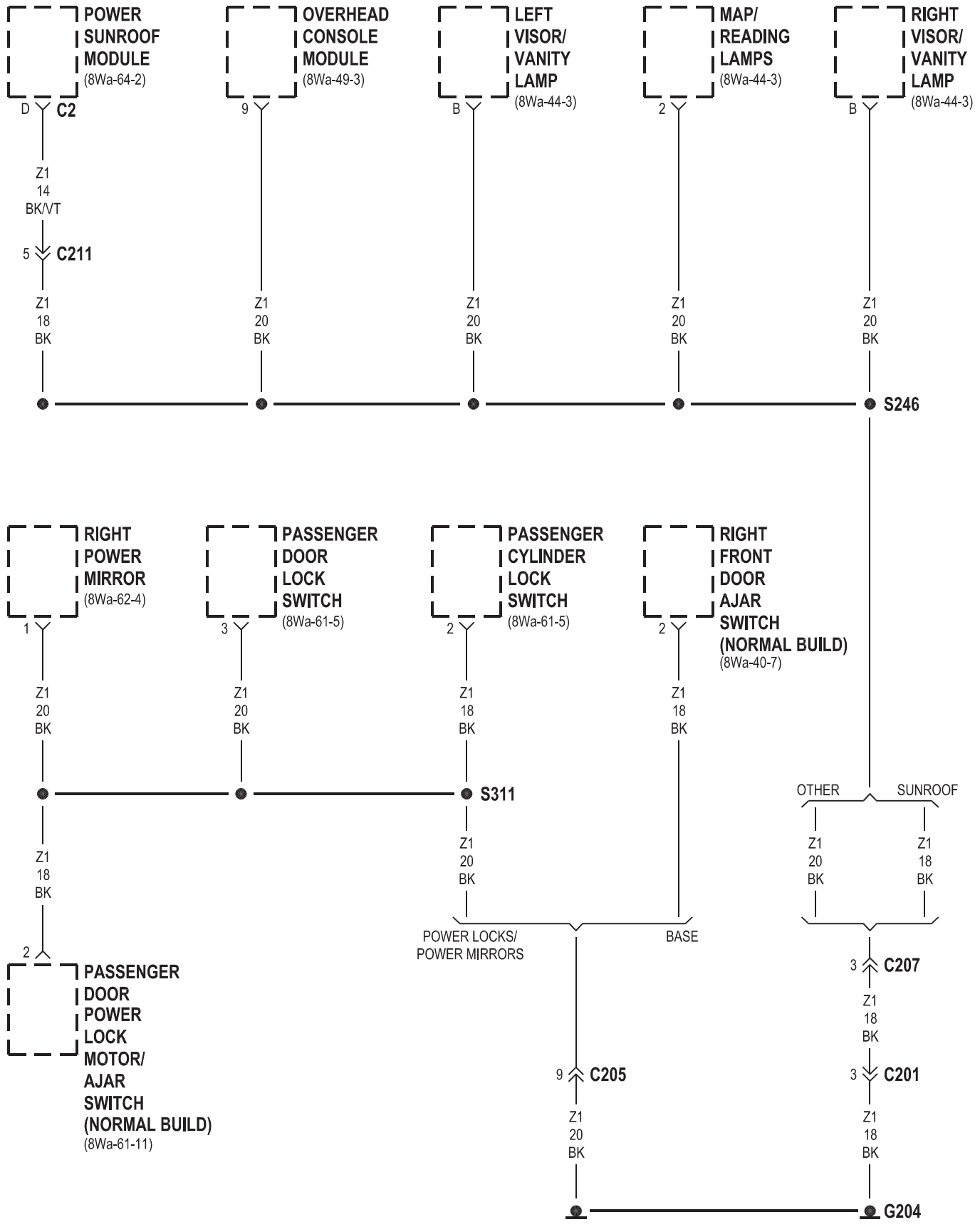
POWER SUNROOF MODULE (8Wa-64-2)
OVERHEAD CONSOLE MODULE (8Wa-49-3)
LEFT VISOR/ VANITY LAMP (8Wa-44-3)
MAP/ READING LAMPS (8Wa-44-3)
RIGHT VISOR/ VANITY LAMP (8Wa-44-3)
D C2
9
B
2
B
Z1 14 BK/VT
5 C211
Z1 18 BK
Z1 20 BK
Z1 20 BK
Z1 20 BK
Z1 20 BK
S246
RIGHT POWER MIRROR (8Wa-62-4)
PASSENGER DOOR LOCK SWITCH (8Wa-61-5)
PASSENGER CYLINDER LOCK SWITCH (8Wa-61-5)
RIGHT FRONT DOOR AJAR SWITCH (NORMAL BUILD) (8Wa-40-7)
1
3
2
2
Z1 20 BK
Z1 20 BK
Z1 18 BK
Z1 18 BK
S311
OTHER
SUNROOF
Z1 20 BK
Z1 18 BK
Z1 20 BK
Z1 18 BK
POWER LOCKS/ POWER MIRRORS
BASE
2
PASSENGER DOOR POWER LOCK MOTOR/ AJAR SWITCH (NORMAL BUILD) (8Wa-61-11)
3 C207
Z1 18 BK
9 C205
3 C201
Z1 20 BK
Z1 18 BK
G204

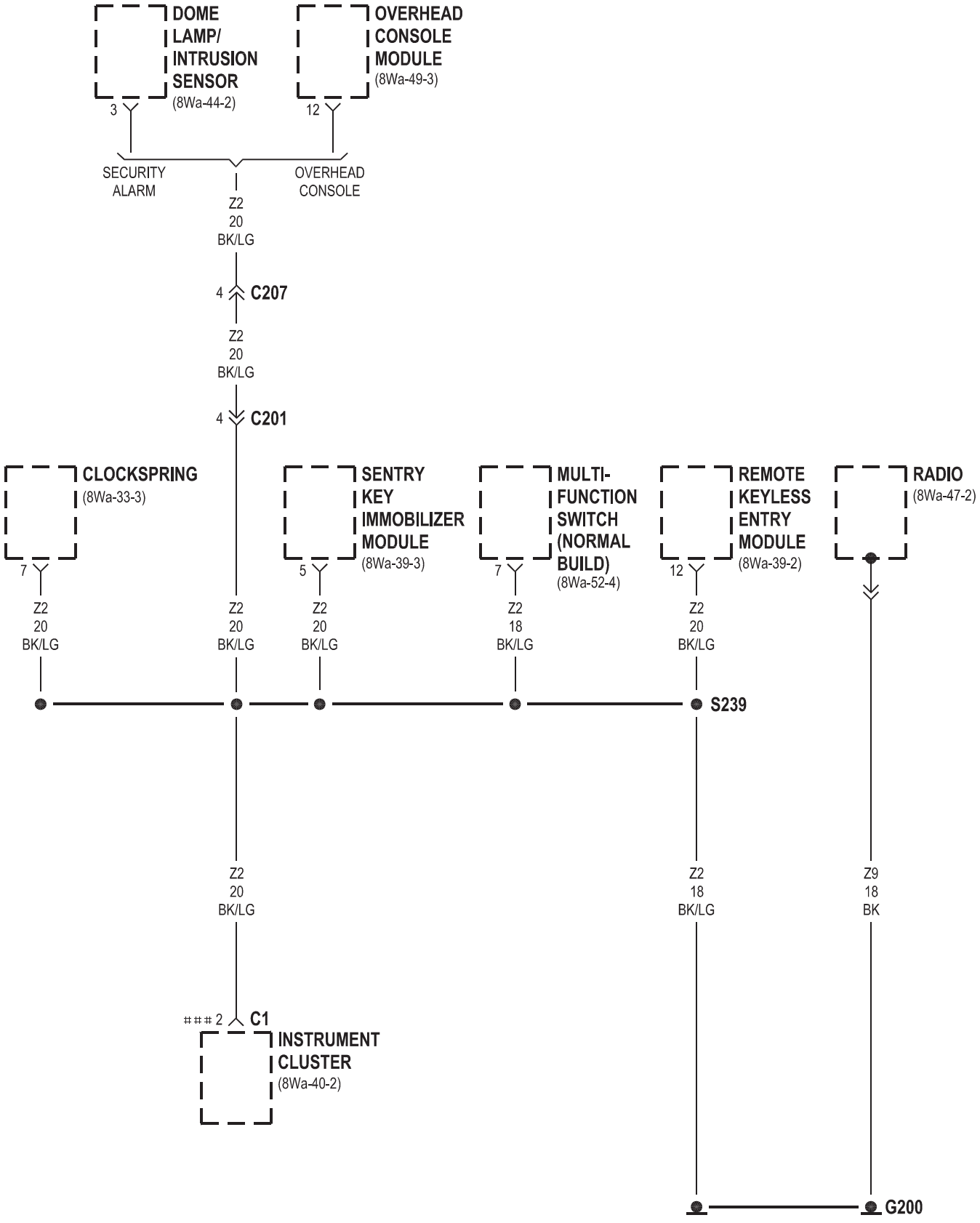

NORMAL BUILD

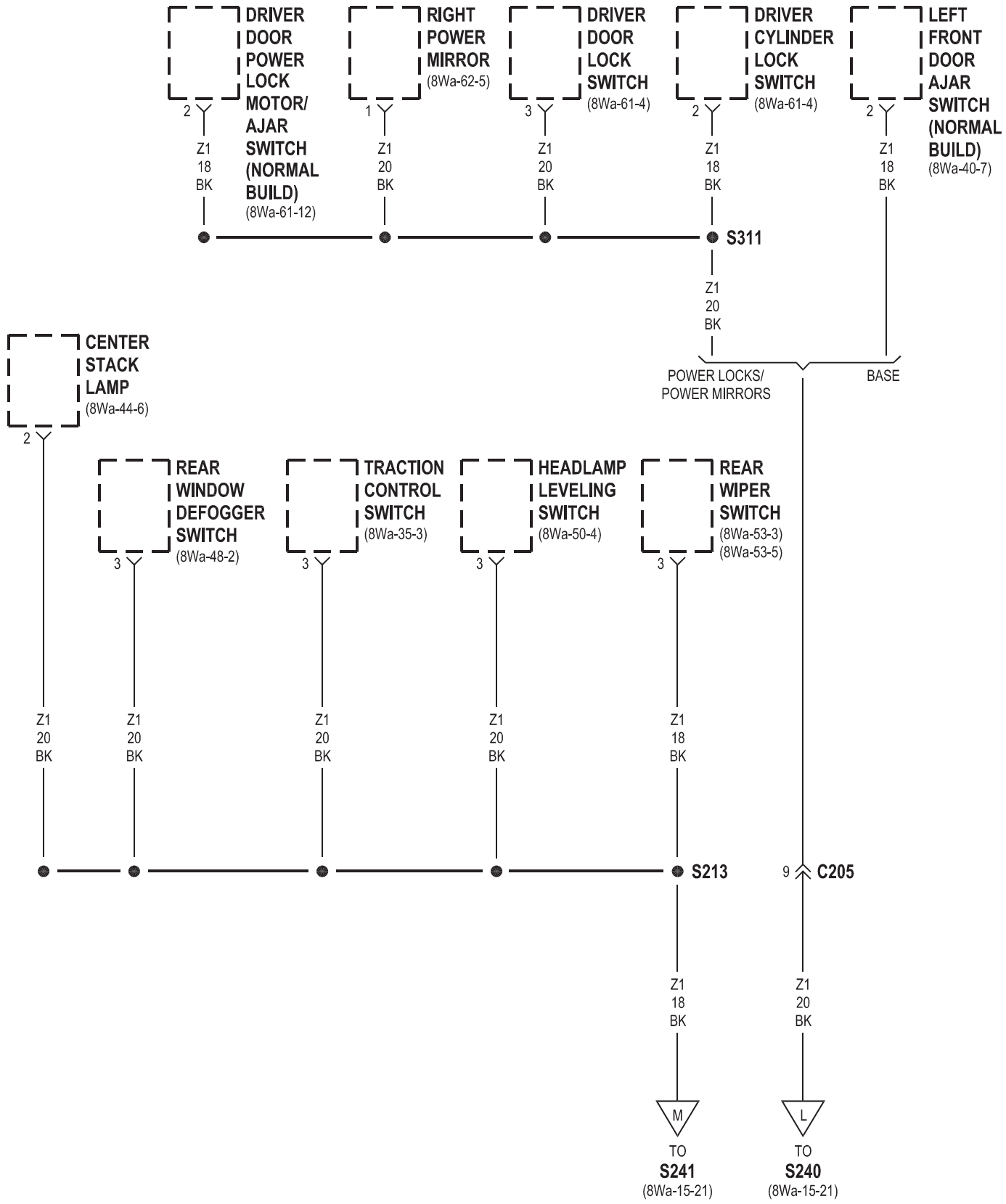
DRIVER DOOR POWER LOCK MOTOR/ AJAR SWITCH (NORMAL BUILD) (8Wa-61-12)
RIGHT POWER MIRROR (8Wa-62-5)
DRIVER DOOR LOCK SWITCH (8Wa-61-4)
DRIVER CYLINDER LOCK SWITCH (8Wa-61-4)
LEFT FRONT DOOR AJAR SWITCH (NORMAL BUILD) (8Wa-40-7)
2
1
3
2
2
Z1 18 BK
Z1 20 BK
Z1 20 BK
Z1 18 BK
Z1 18 BK
S311
Z1 20 BK
POWER LOCKS/ POWER MIRRORS
BASE
CENTER STACK LAMP (8Wa-44-6)
2
REAR WINDOW DEFOGGER SWITCH (8Wa-48-2)
TRACTION CONTROL SWITCH (8Wa-35-3)
HEADLAMP LEVELING SWITCH (8Wa-50-4)
REAR WIPER SWITCH (8Wa-53-3) (8Wa-53-5)
3
3
3
3
Z1 20 BK
Z1 20 BK
Z1 20 BK
Z1 20 BK
Z1 18 BK
S213
9
C205
Z1 18 BK
Z1 20 BK
M
L
TO S241 (8Wa-15-21)
TO S240 (8Wa-15-21)

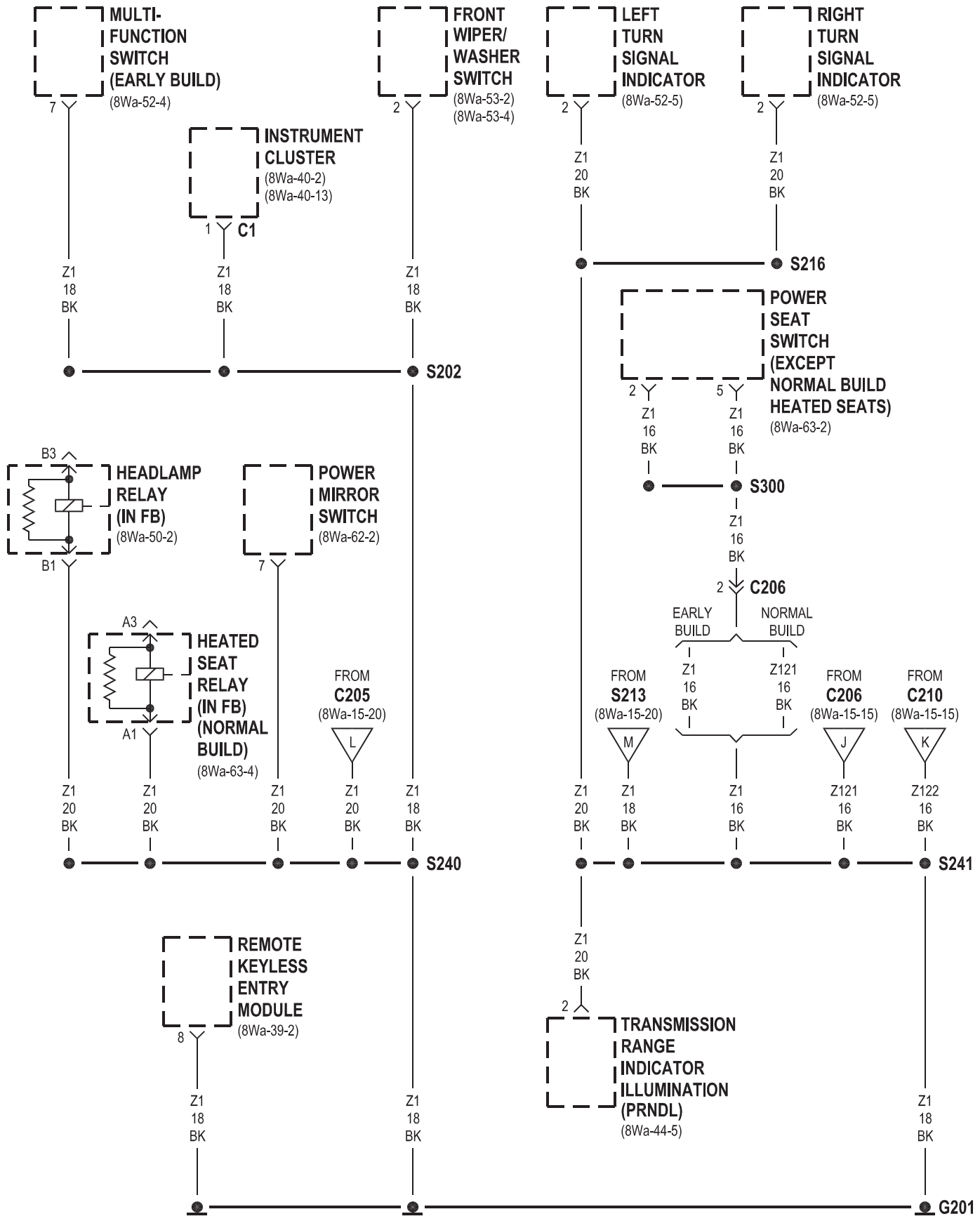
MULTI-FUNCTION SWITCH (EARLY BUILD)
(8Wa-52-4)
7
FRONT WIPER/ WASHER SWITCH
(8Wa-53-2)
(8Wa-53-4)
2
LEFT TURN SIGNAL INDICATOR
(8Wa-52-5)
2
RIGHT TURN SIGNAL INDICATOR
(8Wa-52-5)
2
INSTRUMENT CLUSTER
(8Wa-40-2)
(8Wa-40-13)
1
C1
Z1 20 BK
Z1 20 BK
S216
Z1 18 BK
Z1 18 BK
Z1 18 BK
S202
POWER SEAT SWITCH (EXCEPT NORMAL BUILD HEATED SEATS)
(8Wa-63-2)
2
5
Z1 16 BK
Z1 16 BK
S300
Z1 16 BK
2
C206
B3
HEADLAMP RELAY (IN FB)
(8Wa-50-2)
B1
POWER MIRROR SWITCH
(8Wa-62-2)
7
EARLY BUILD
NORMAL BUILD
A3
HEATED SEAT RELAY (IN FB) (NORMAL BUILD)
(8Wa-63-4)
A1
FROM C205
(8Wa-15-20)
L
FROM S213
(8Wa-15-20)
M
Z1 16 BK
Z121 16 BK
FROM C206
(8Wa-15-15)
J
FROM C210
(8Wa-15-15)
K
Z1 20 BK
Z1 20 BK
Z1 20 BK
Z1 20 BK
Z1 18 BK
S240
Z1 20 BK
Z1 18 BK
Z1 16 BK
Z121 16 BK
Z122 16 BK
S241
REMOTE KEYLESS ENTRY MODULE
(8Wa-39-2)
8
Z1 20 BK
2
TRANSMISSION RANGE INDICATOR ILLUMINATION (PRNDL)
(8Wa-44-5)
Z1 18 BK
Z1 18 BK
Z1 18 BK
G201

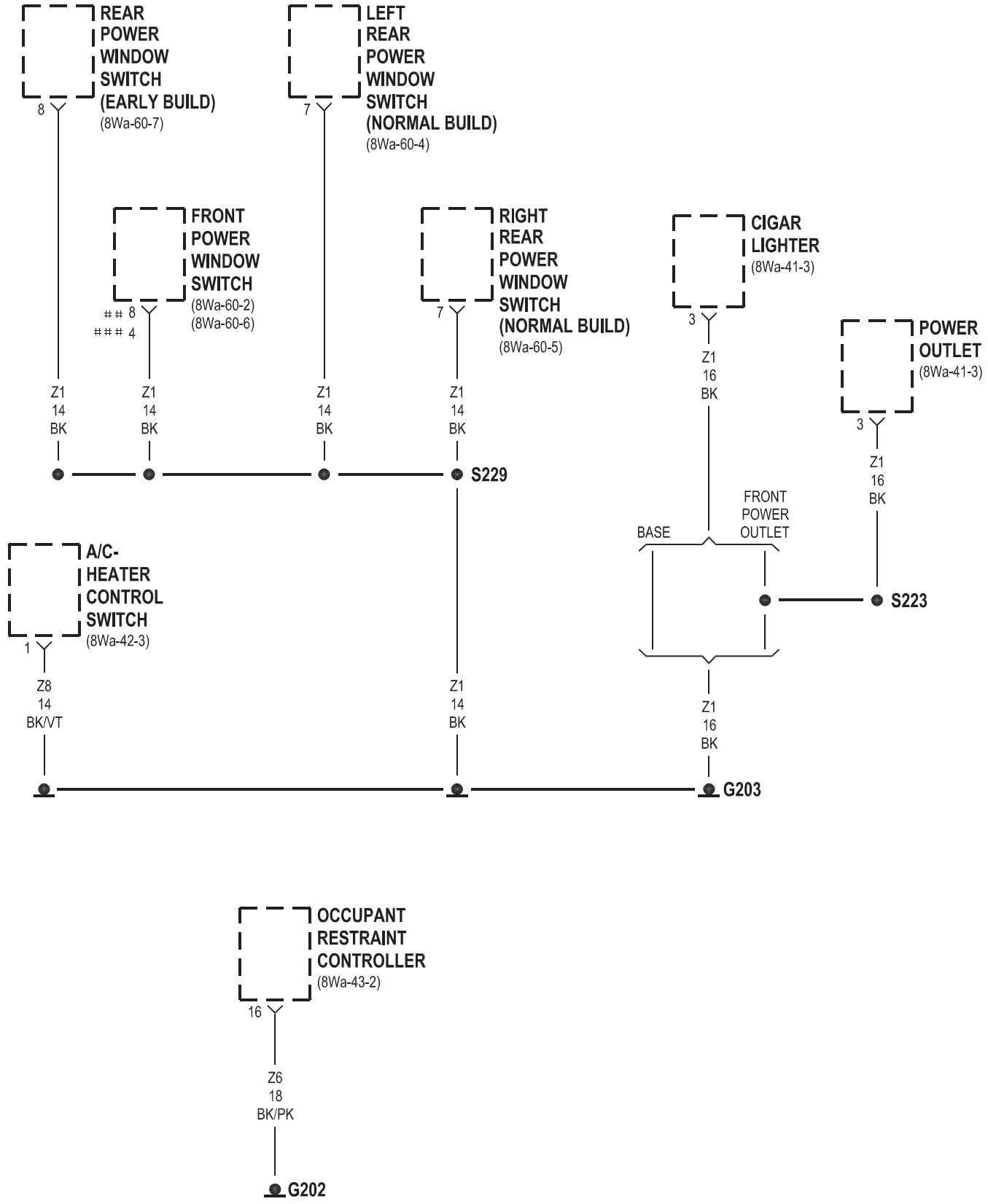

EARLY BUILD
NORMAL BUILD

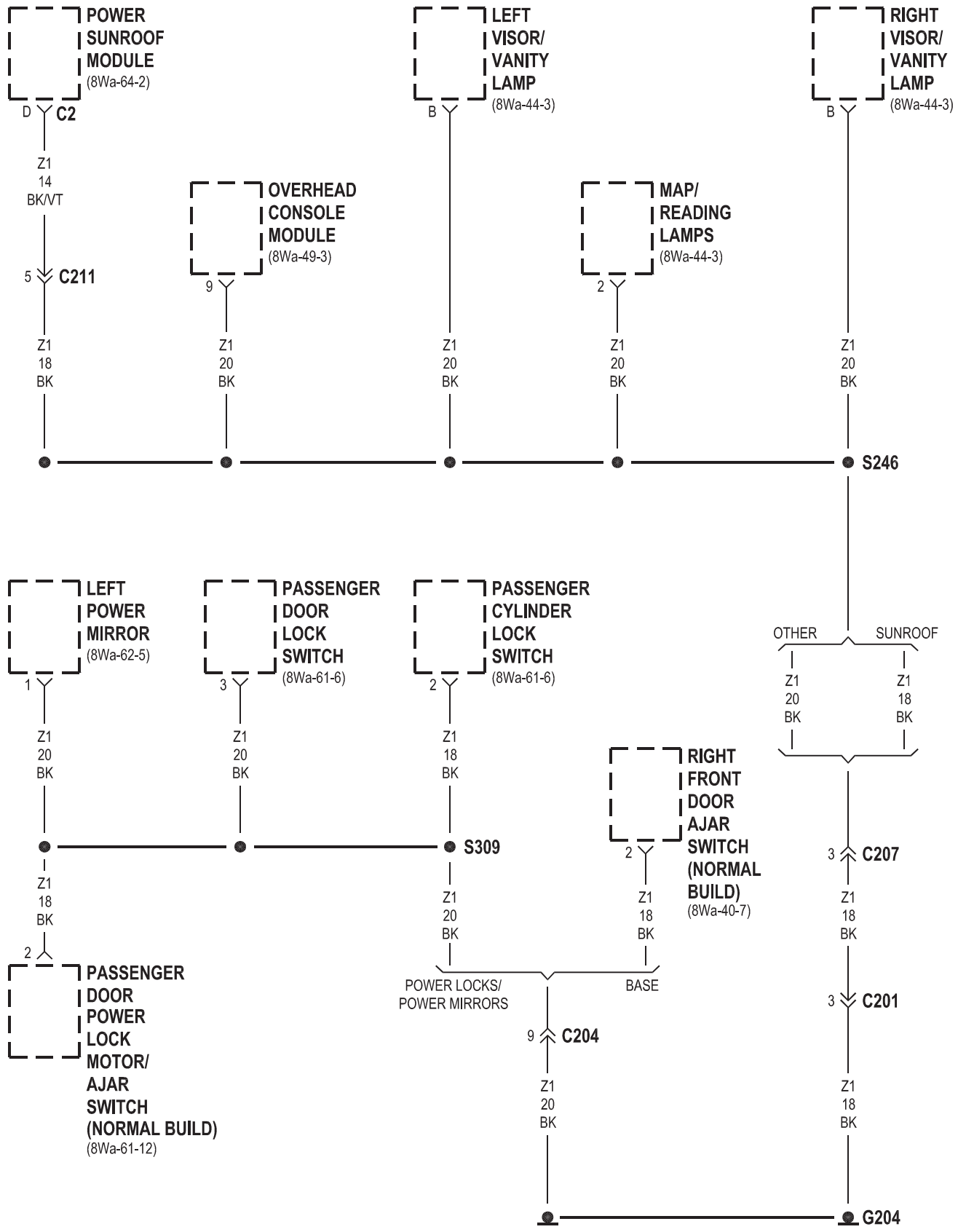
POWER SUNROOF MODULE
(8Wa-64-2)
D
C2
Z1
14
BK/VT
5
C211
Z1
18
BK
OVERHEAD CONSOLE MODULE
(8Wa-49-3)
9
Z1
20
BK
LEFT VISOR/ VANITY LAMP
(8Wa-44-3)
B
Z1
20
BK
MAP/ READING LAMPS
(8Wa-44-3)
2
Z1
20
BK
RIGHT VISOR/ VANITY LAMP
(8Wa-44-3)
B
Z1
20
BK
S246
LEFT POWER MIRROR
(8Wa-62-5)
1
Z1
20
BK
PASSENGER DOOR LOCK SWITCH
(8Wa-61-6)
3
Z1
20
BK
PASSENGER CYLINDER LOCK SWITCH
(8Wa-61-6)
2
Z1
18
BK
S309
Z1
18
BK
2
PASSENGER DOOR POWER LOCK MOTOR/ AJAR SWITCH (NORMAL BUILD)
(8Wa-61-12)
Z1
20
BK
POWER LOCKS/ POWER MIRRORS
RIGHT FRONT DOOR AJAR SWITCH (NORMAL BUILD)
(8Wa-40-7)
2
Z1
18
BK
BASE
9
C204
Z1
20
BK
G204
OTHER
SUNROOF
Z1
20
BK
Z1
18
BK
3
C207
Z1
18
BK
3
C201
Z1
18
BK

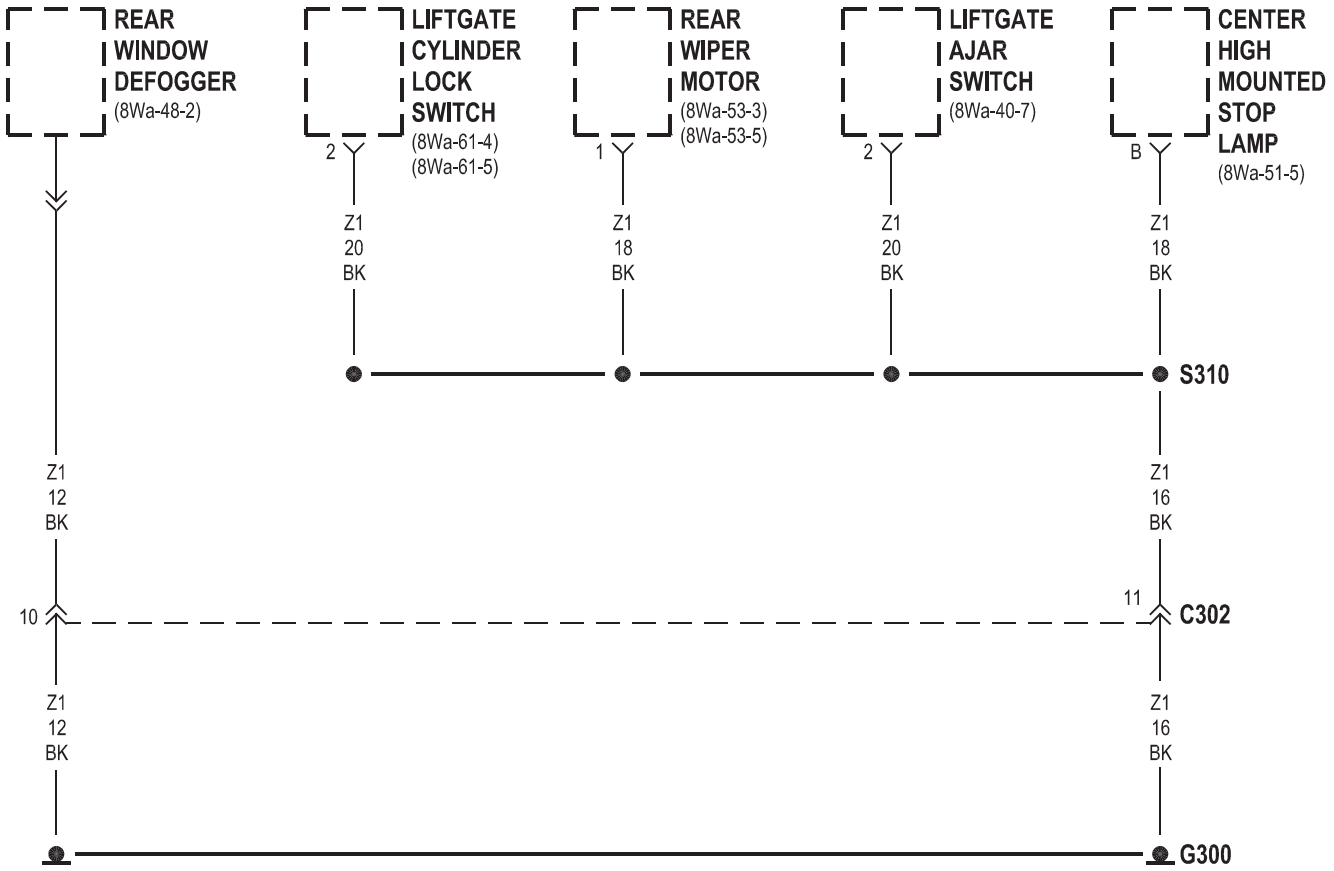
REAR WINDOW DEFOGGER (8Wa-48-2)
LIFTGATE CYLINDER LOCK SWITCH (8Wa-61-4) (8Wa-61-5)
REAR WIPER MOTOR (8Wa-53-3) (8Wa-53-5)
LIFTGATE AJAR SWITCH (8Wa-40-7)
CENTER HIGH MOUNTED STOP LAMP (8Wa-51-5)
2
1
2
B
Z1 20 BK
Z1 18 BK
Z1 20 BK
Z1 18 BK
S310
Z1 12 BK
Z1 16 BK
10
11
C302
Z1 12 BK
Z1 16 BK
G300

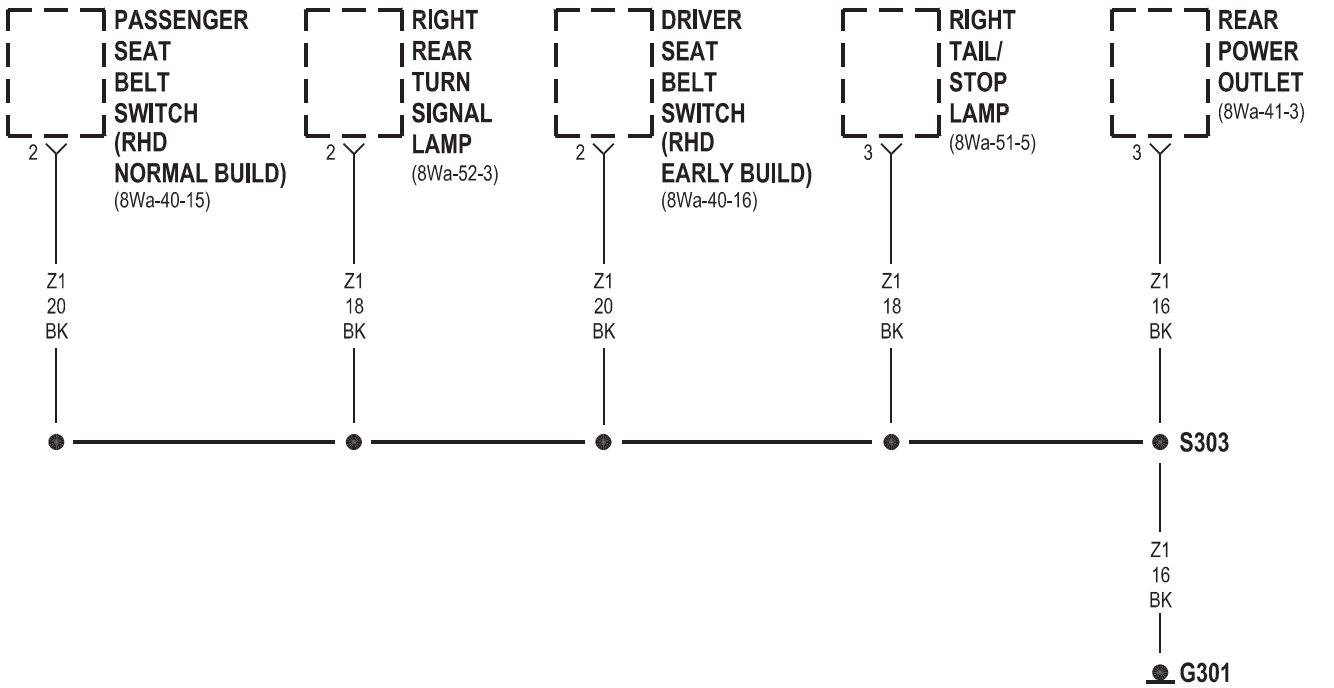
PASSENGER SEAT BELT SWITCH (RHD NORMAL BUILD) (8Wa-40-15)
RIGHT REAR TURN SIGNAL LAMP (8Wa-52-3)
DRIVER SEAT BELT SWITCH (RHD EARLY BUILD) (8Wa-40-16)
RIGHT TAIL/ STOP LAMP (8Wa-51-5)
REAR POWER OUTLET (8Wa-41-3)
2
2
2
3
3
Z1 20 BK
Z1 18 BK
Z1 20 BK
Z1 18 BK
Z1 16 BK
S303
Z1 16 BK
G301

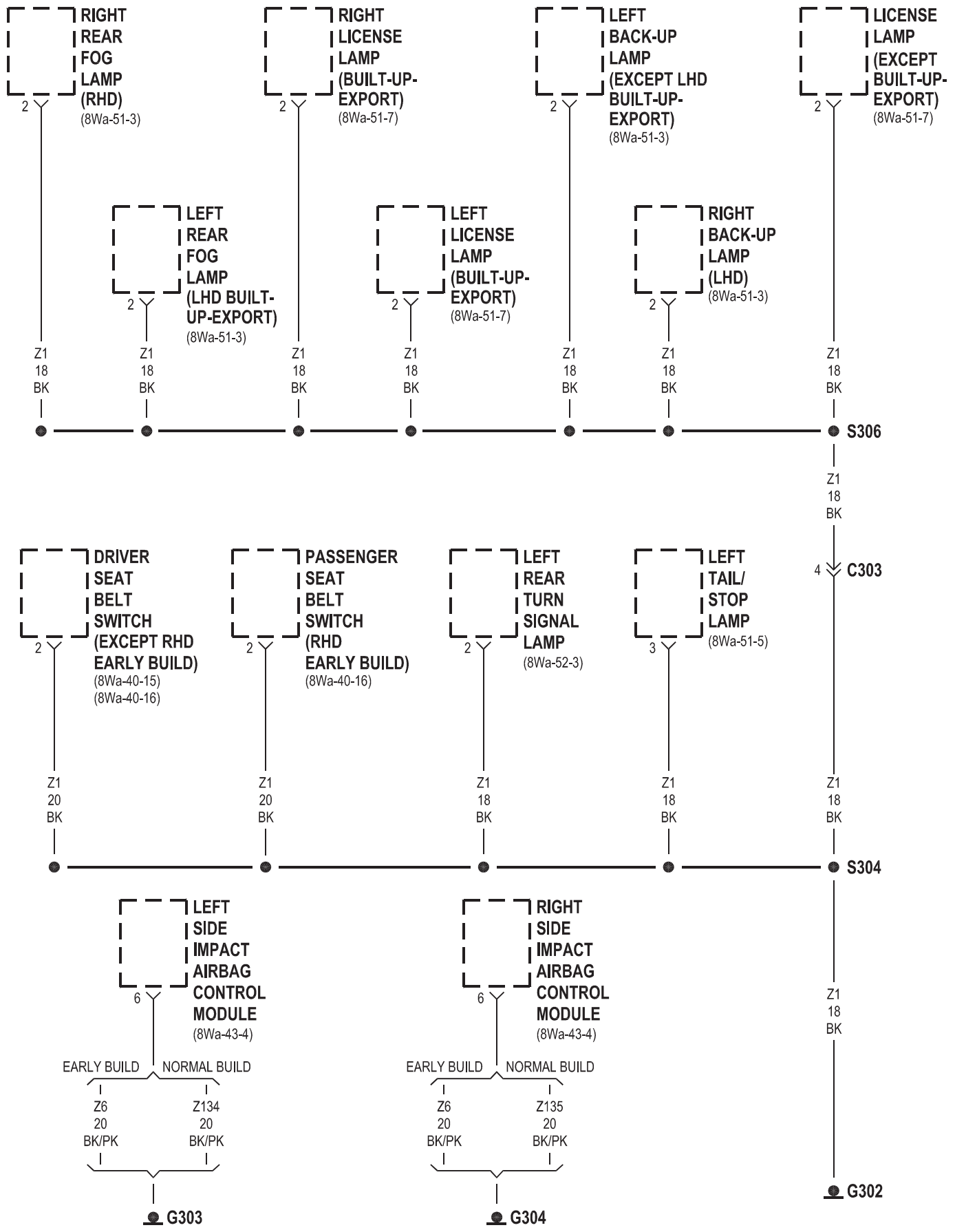
RIGHT REAR FOG LAMP (RHD)
(8Wa-51-3)
RIGHT LICENSE LAMP (BUILT-UP-EXPORT)
(8Wa-51-7)
LEFT BACK-UP LAMP (EXCEPT LHD BUILT-UP-EXPORT)
(8Wa-51-3)
LICENSE LAMP (EXCEPT BUILT-UP-EXPORT)
(8Wa-51-7)
LEFT REAR FOG LAMP (LHD BUILT-UP-EXPORT)
(8Wa-51-3)
LEFT LICENSE LAMP (BUILT-UP-EXPORT)
(8Wa-51-7)
RIGHT BACK-UP LAMP (LHD)
(8Wa-51-3)
2
Z1 18 BK
S306
Z1 18 BK
4
C303
DRIVER SEAT BELT SWITCH (EXCEPT RHD EARLY BUILD)
(8Wa-40-15)
(8Wa-40-16)
PASSENGER SEAT BELT SWITCH (RHD EARLY BUILD)
(8Wa-40-16)
LEFT REAR TURN SIGNAL LAMP
(8Wa-52-3)
LEFT TAIL/STOP LAMP
(8Wa-51-5)
3
Z1 20 BK
Z1 18 BK
S304
LEFT SIDE IMPACT AIRBAG CONTROL MODULE
(8Wa-43-4)
RIGHT SIDE IMPACT AIRBAG CONTROL MODULE
(8Wa-43-4)
6
EARLY BUILD
NORMAL BUILD
Z6 20 BK/PK
Z134 20 BK/PK
Z135 20 BK/PK
G303
G304
G302

2001 PT CRUISER

8W-18 BUS COMMUNICATIONS

Component	Page
Controller Antilock Brake	8Wa-18-2
Data Link Connector	8Wa-18-2
Fuse 13 (PDC)	8Wa-18-2
G102	8Wa-18-2
Instrument Cluster	8Wa-18-3
Left Side Impact Airbag Control Module	8Wa-18-3
Occupant Restraint Controller	8Wa-18-3
Power Distribution Center	8Wa-18-2
Powertrain Control Module	8Wa-18-2
Radio	8Wa-18-3
Remote Keyless Entry Module	8Wa-18-3
Right Side Impact Airbag Control Module	8Wa-18-3
Sentry Key Immobilizer Module	8Wa-18-3
Transmission Control Module	8Wa-18-2

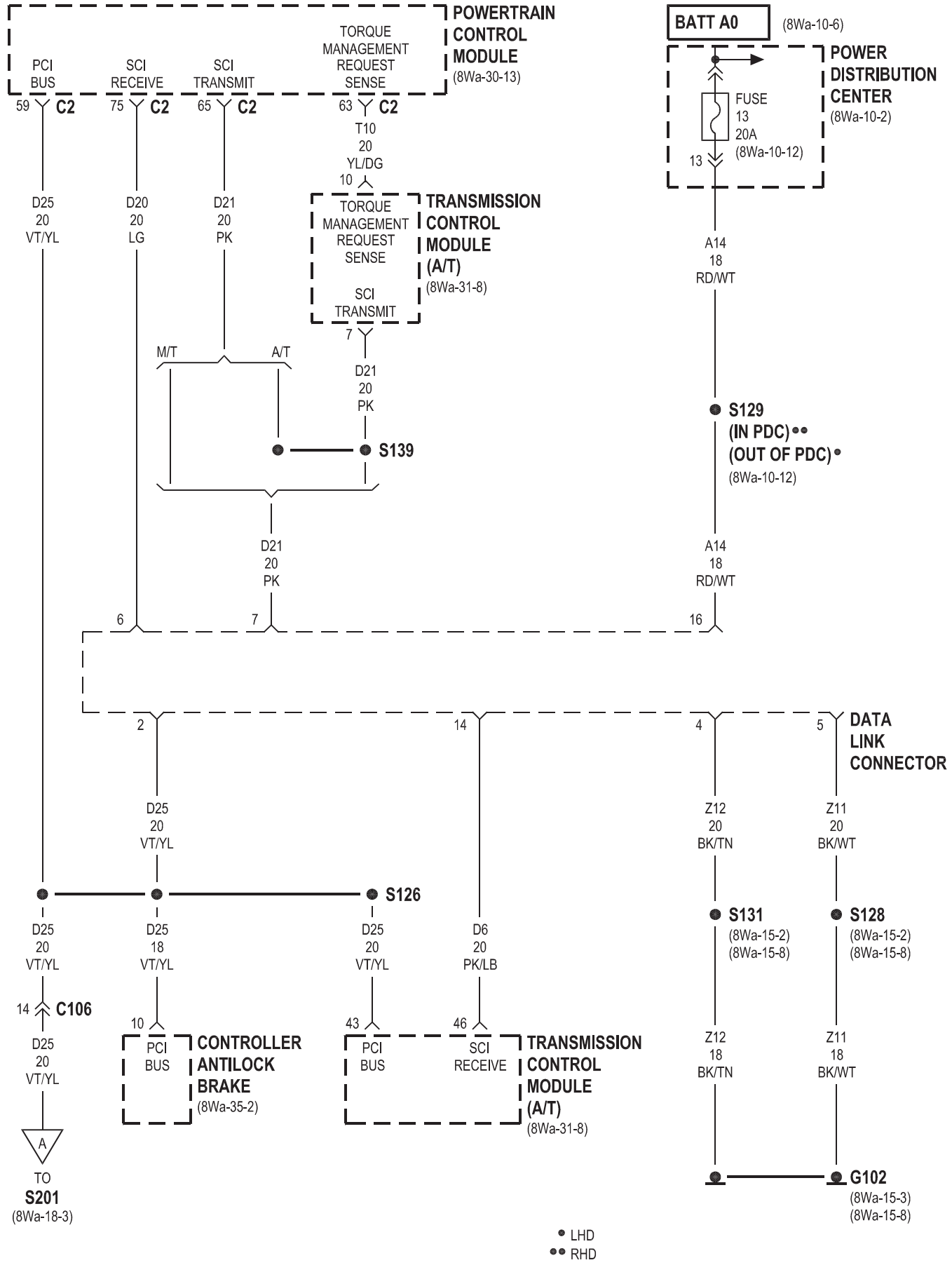
POWERTRAIN CONTROL MODULE
(8Wa-30-13)
PCI BUS
SCI RECEIVE
SCI TRANSMIT
TORQUE MANAGEMENT REQUEST SENSE
59 C2
75 C2
65 C2
63 C2
T10
20
YL/DG
10
D25
20
VT/YL
D20
20
LG
D21
20
PK
TRANSMISSION CONTROL MODULE (A/T)
(8Wa-31-8)
TORQUE MANAGEMENT REQUEST SENSE
SCI TRANSMIT
7
M/T
A/T
D21
20
PK
S139
D21
20
PK
6
7
BATT A0
(8Wa-10-6)
POWER DISTRIBUTION CENTER
(8Wa-10-2)
FUSE
13
20A
(8Wa-10-12)
13
A14
18
RD/WT
S129
(IN PDC)••
(OUT OF PDC)•
(8Wa-10-12)
A14
18
RD/WT
16
2
14
4
5
DATA LINK CONNECTOR
D25
20
VT/YL
Z12
20
BK/TN
Z11
20
BK/WT
S126
S131
(8Wa-15-2)
(8Wa-15-8)
S128
(8Wa-15-2)
(8Wa-15-8)
D25
20
VT/YL
D25
18
VT/YL
D25
20
VT/YL
D6
20
PK/LB
14 C106
D25
20
VT/YL
10
43
46
PCI BUS
CONTROLLER ANTILOCK BRAKE
(8Wa-35-2)
PCI BUS
SCI RECEIVE
TRANSMISSION CONTROL MODULE (A/T)
(8Wa-31-8)
Z12
18
BK/TN
Z11
18
BK/WT
A
TO
S201
(8Wa-18-3)
G102
(8Wa-15-3)
(8Wa-15-8)
• LHD
•• RHD

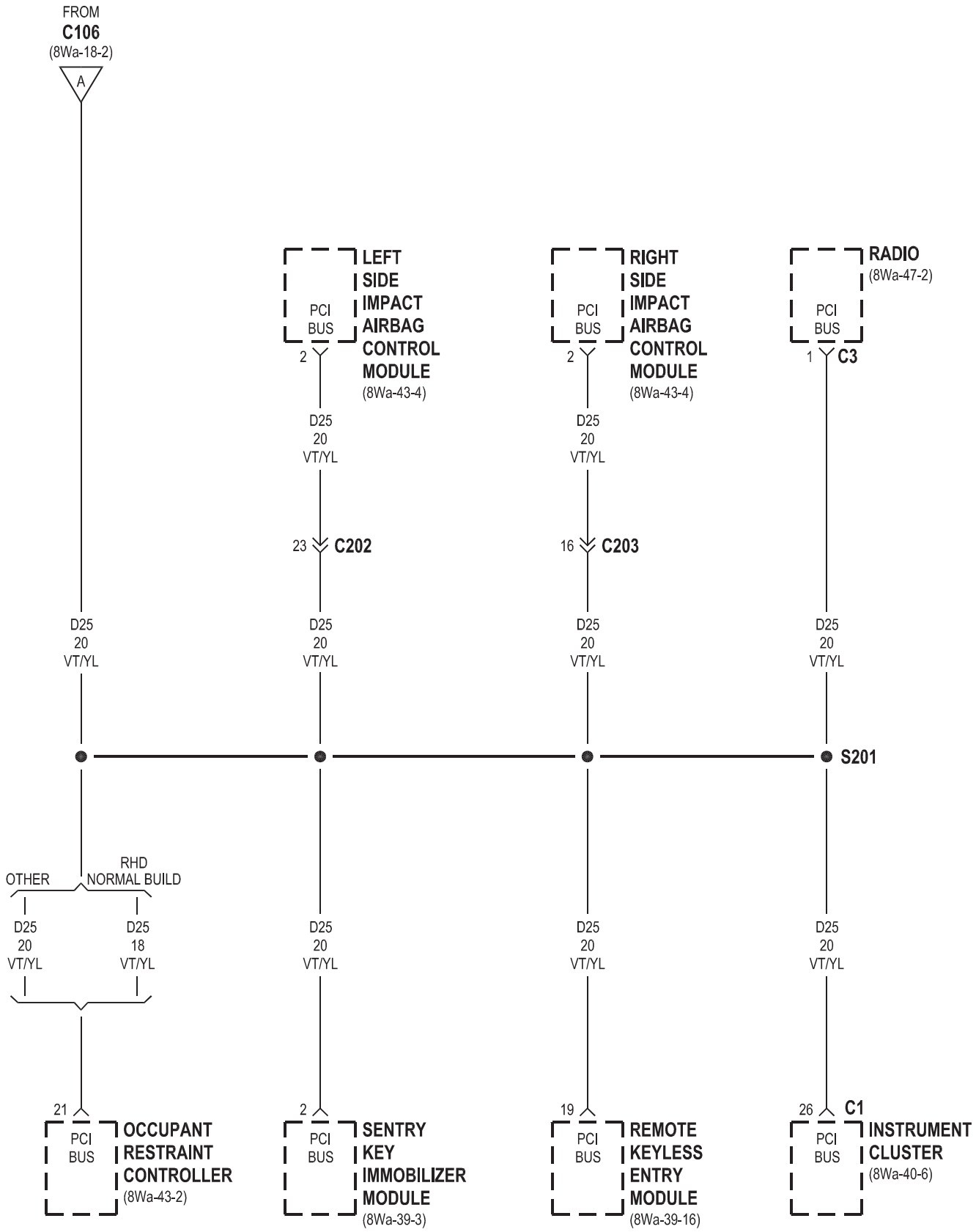
FROM
C106
(8Wa-18-2)
A
LEFT SIDE IMPACT AIRBAG CONTROL MODULE
(8Wa-43-4)
PCI BUS
2
D25
20
VT/YL
23
C202
RIGHT SIDE IMPACT AIRBAG CONTROL MODULE
(8Wa-43-4)
PCI BUS
2
D25
20
VT/YL
16
C203
RADIO
(8Wa-47-2)
PCI BUS
1
C3
D25
20
VT/YL
S201
OTHER
RHD NORMAL BUILD
D25
20
VT/YL
D25
18
VT/YL
D25
20
VT/YL
D25
20
VT/YL
D25
20
VT/YL
21
PCI BUS
OCCUPANT RESTRAINT CONTROLLER
(8Wa-43-2)
2
PCI BUS
SENTRY KEY IMMOBILIZER MODULE
(8Wa-39-3)
19
PCI BUS
REMOTE KEYLESS ENTRY MODULE
(8Wa-39-16)
26
C1
PCI BUS
INSTRUMENT CLUSTER
(8Wa-40-6)

2001 PT CRUISER

8W-20 CHARGING SYSTEM

Component	Page
Automatic Shut Down Relay	8Wa-20-2
Battery	8Wa-20-2
Engine Starter Motor	8Wa-20-2
Fuse 13 (PDC)	8Wa-20-2
Fusible Link	8Wa-20-2
G100	8Wa-20-2
G101	8Wa-20-2
Generator	8Wa-20-2
Power Distribution Center	8Wa-20-2
Powertrain Control Module	8Wa-20-2

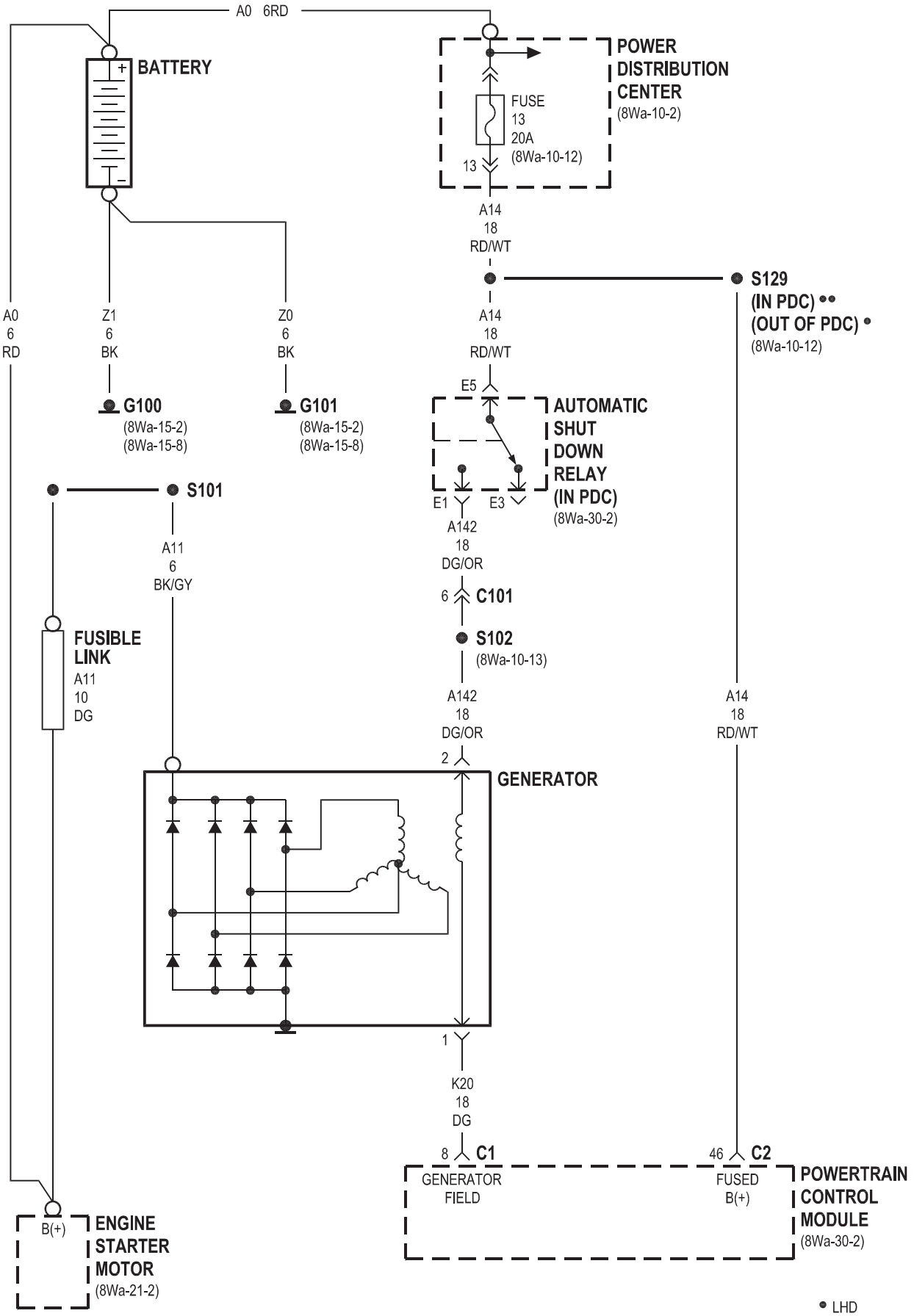
A0 6RD
BATTERY
+
–
POWER DISTRIBUTION CENTER
(8Wa-10-2)
FUSE 13 20A
(8Wa-10-12)
13
A14 18 RD/WT
S129
(IN PDC) ••
(OUT OF PDC) •
(8Wa-10-12)
A0 6 RD
Z1 6 BK
Z0 6 BK
A14 18 RD/WT
E5
G100
(8Wa-15-2)
(8Wa-15-8)
G101
(8Wa-15-2)
(8Wa-15-8)
AUTOMATIC SHUT DOWN RELAY (IN PDC)
(8Wa-30-2)
E1
E3
S101
A142 18 DG/OR
A11 6 BK/GY
6
C101
S102
(8Wa-10-13)
FUSIBLE LINK
A11 10 DG
A142 18 DG/OR
A14 18 RD/WT
2
GENERATOR
1
K20 18 DG
8
C1
GENERATOR FIELD
46
C2
FUSED B(+)
POWERTRAIN CONTROL MODULE
(8Wa-30-2)
B(+)
ENGINE STARTER MOTOR
(8Wa-21-2)
• LHD
•• RHD

8W-21 STARTING SYSTEM

Component	Page
Battery	8Wa-21-2
Engine Starter Motor	8Wa-21-2
Engine Starter Motor Relay	8Wa-21-2
Fuse 1 (PDC)	8Wa-21-2
Fusible Link	8Wa-21-2
Generator	8Wa-21-2
Ignition Switch	8Wa-21-2
Power Distribution Center	8Wa-21-2
Powertrain Control Module	8Wa-21-2

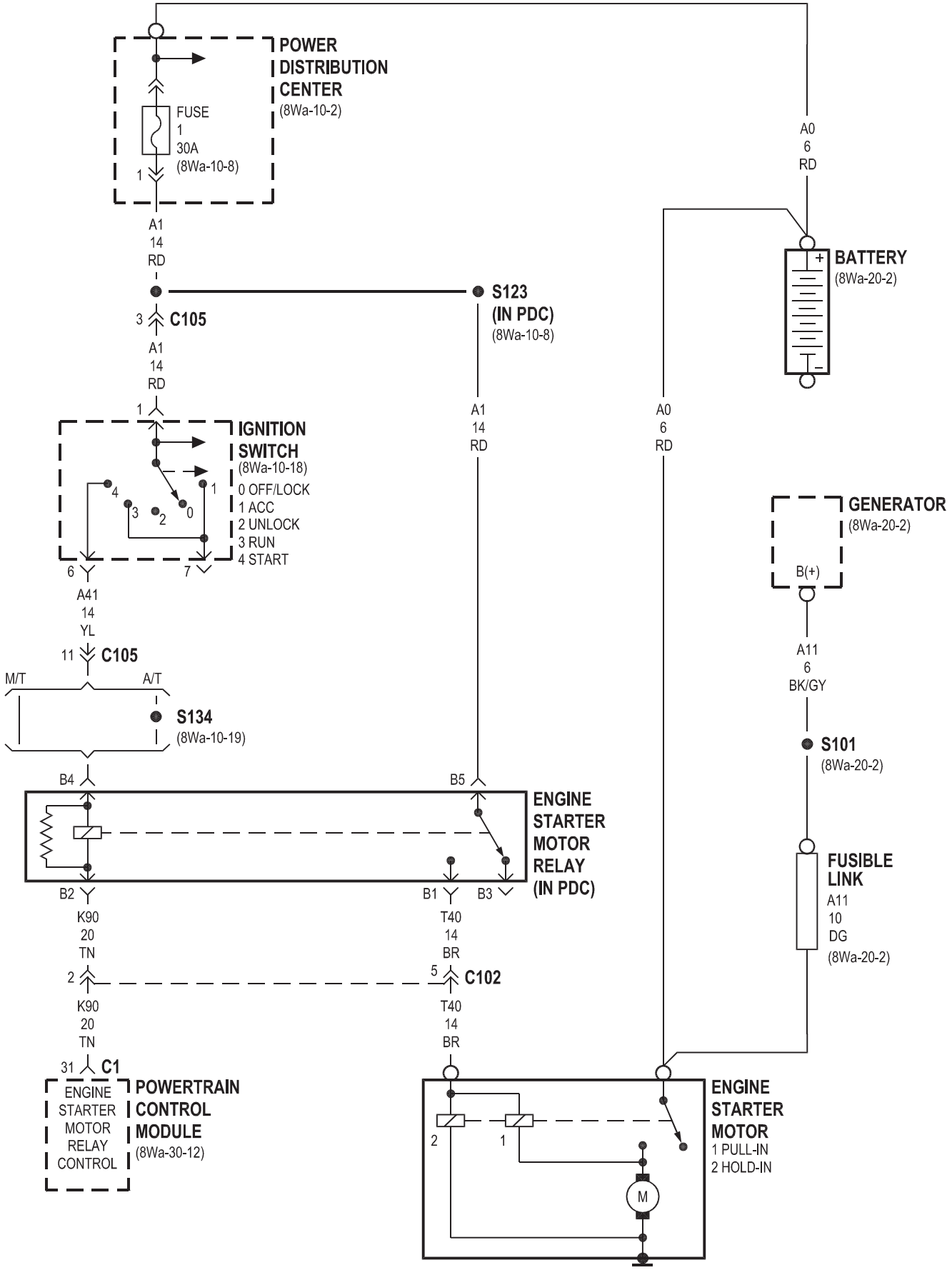
POWER DISTRIBUTION CENTER
(8Wa-10-2)
FUSE 1 30A
(8Wa-10-8)
1
A1 14 RD
3
C105
A1 14 RD
1
S123 (IN PDC)
(8Wa-10-8)
A0 6 RD
BATTERY
(8Wa-20-2)
IGNITION SWITCH
(8Wa-10-18)
0 OFF/LOCK
1 ACC
2 UNLOCK
3 RUN
4 START
A1 14 RD
A0 6 RD
GENERATOR
(8Wa-20-2)
B(+)
6
7
A41 14 YL
11
C105
M/T
A/T
S134
(8Wa-10-19)
A11 6 BK/GY
S101
(8Wa-20-2)
B4
B5
ENGINE STARTER MOTOR RELAY (IN PDC)
B2
B1
B3
FUSIBLE LINK
A11 10 DG
(8Wa-20-2)
K90 20 TN
T40 14 BR
2
5
C102
K90 20 TN
T40 14 BR
31
C1
ENGINE STARTER MOTOR RELAY CONTROL
POWERTRAIN CONTROL MODULE
(8Wa-30-12)
ENGINE STARTER MOTOR
1 PULL-IN
2 HOLD-IN
M

8W-30 FUEL/IGNITION SYSTEM

Component	Page
A/C Compressor Clutch Relay	8Wa-30-8
A/C Pressure Transducer	8Wa-30-8
Automatic Shut Down Relay	8Wa-30-2, 3, 4
Brake Lamp Switch	8Wa-30-10, 11
Brake Transmission Shift Interlock Solenoid	8Wa-30-11
Brake Warning Indicator Switch	8Wa-30-11
Camshaft Position Sensor	8Wa-30-6
Clockspring	8Wa-30-10
Clutch Pedal Position Switch	8Wa-30-12
Controller Antilock Brake	8Wa-30-11, 13
Crankshaft Position Sensor	8Wa-30-6
Data Link Connector	8Wa-30-2, 13
EGR Solenoid	8Wa-30-3
Engine Coolant Temperature Sensor	8Wa-30-6
Engine Oil Pressure Switch	8Wa-30-2
Engine Starter Motor Relay	8Wa-30-12
Evap Purge Solenoid	8Wa-30-12
Fuel Injector No. 1	8Wa-30-4
Fuel Injector No. 2	8Wa-30-4
Fuel Injector No. 3	8Wa-30-4
Fuel Injector No. 4	8Wa-30-4
Fuel Pump Module	8Wa-30-9
Fuel Pump Relay	8Wa-30-9
Fuse 11 (FB)	8Wa-30-2, 9
Fuse 12 (FB)	8Wa-30-8, 11
Fuse 12 (PDC)	8Wa-30-11
Fuse 13 (PDC)	8Wa-30-2, 9
Fuse Block	8Wa-30-2, 8, 9, 11
G102	8Wa-30-2, 11, 12
G103	8Wa-30-3
G104	8Wa-30-9, 10, 11, 12
G200	8Wa-30-10
Generator	8Wa-30-2
High Speed Radiator Fan Relay	8Wa-30-8
Idle Air Control Motor	8Wa-30-7
Ignition Coil	8Wa-30-4
Inlet Air Temperature Sensor	8Wa-30-5
Instrument Cluster	8Wa-30-9
Knock Sensor	8Wa-30-5
Leak Detection Pump	8Wa-30-8
Low Speed Radiator Fan Relay	8Wa-30-8
Manifold Absolute Pressure Sensor	8Wa-30-5
Noise Suppressor	8Wa-30-4
Oxygen Sensor 1/1 Upstream	8Wa-30-3
Oxygen Sensor 1/2 Downstream	8Wa-30-3
Power Distribution Center	8Wa-30-2, 9, 11
Power Steering Pressure Switch	8Wa-30-12
Powertrain Control Module	8Wa-30-2, 3, 4, 5, 6, 7, 8, 9, 10, 11, 12, 13
Speed Control Servo	8Wa-30-10, 11
Throttle Position Sensor	8Wa-30-5
Transmission Control Module	8Wa-30-5, 6, 7, 12, 13
Transmission Range Sensor	8Wa-30-12
Vehicle Speed Control Switch	8Wa-30-10
Vehicle Speed Sensor	8Wa-30-7

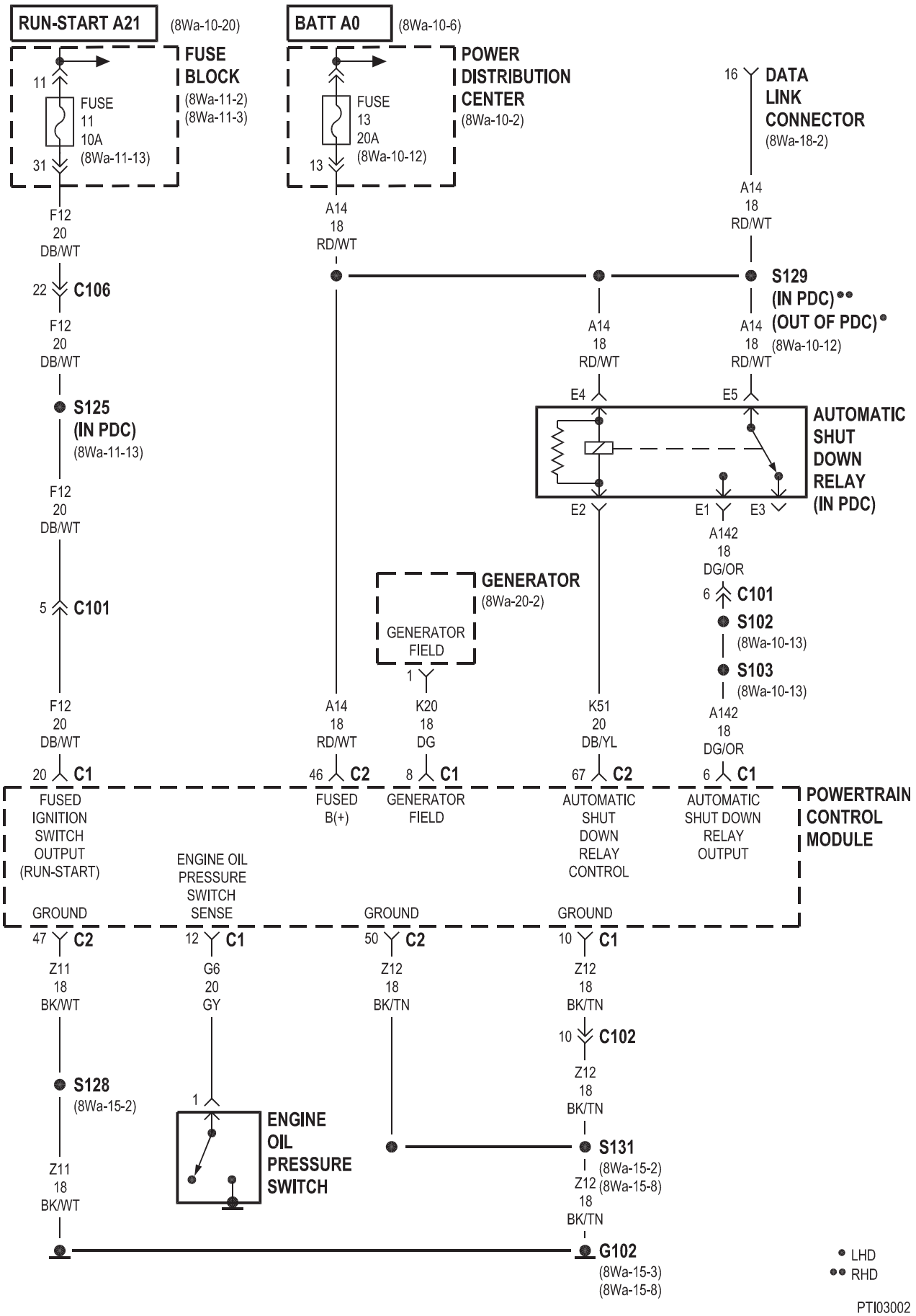
RUN-START A21
(8Wa-10-20)
BATT A0
(8Wa-10-6)
FUSE BLOCK
(8Wa-11-2)
(8Wa-11-3)
11
FUSE 11 10A
(8Wa-11-13)
31
POWER DISTRIBUTION CENTER
(8Wa-10-2)
FUSE 13 20A
(8Wa-10-12)
13
16
DATA LINK CONNECTOR
(8Wa-18-2)
A14 18 RD/WT
F12 20 DB/WT
22
C106
S129
(IN PDC)••
(OUT OF PDC)•
(8Wa-10-12)
S125
(IN PDC)
(8Wa-11-13)
E4
E5
AUTOMATIC SHUT DOWN RELAY (IN PDC)
E2
E1
E3
A142 18 DG/OR
5
C101
6
C101
S102
(8Wa-10-13)
S103
(8Wa-10-13)
GENERATOR
(8Wa-20-2)
GENERATOR FIELD
1
K20 18 DG
K51 20 DB/YL
20
C1
46
C2
8
C1
67
C2
6
C1
FUSED IGNITION SWITCH OUTPUT (RUN-START)
FUSED B(+)
GENERATOR FIELD
AUTOMATIC SHUT DOWN RELAY CONTROL
AUTOMATIC SHUT DOWN RELAY OUTPUT
POWERTRAIN CONTROL MODULE
ENGINE OIL PRESSURE SWITCH SENSE
GROUND
47
C2
12
C1
50
C2
10
C1
Z11 18 BK/WT
G6 20 GY
Z12 18 BK/TN
10
C102
S128
(8Wa-15-2)
ENGINE OIL PRESSURE SWITCH
S131
(8Wa-15-2)
(8Wa-15-8)
G102
(8Wa-15-3)
(8Wa-15-8)
• LHD
•• RHD

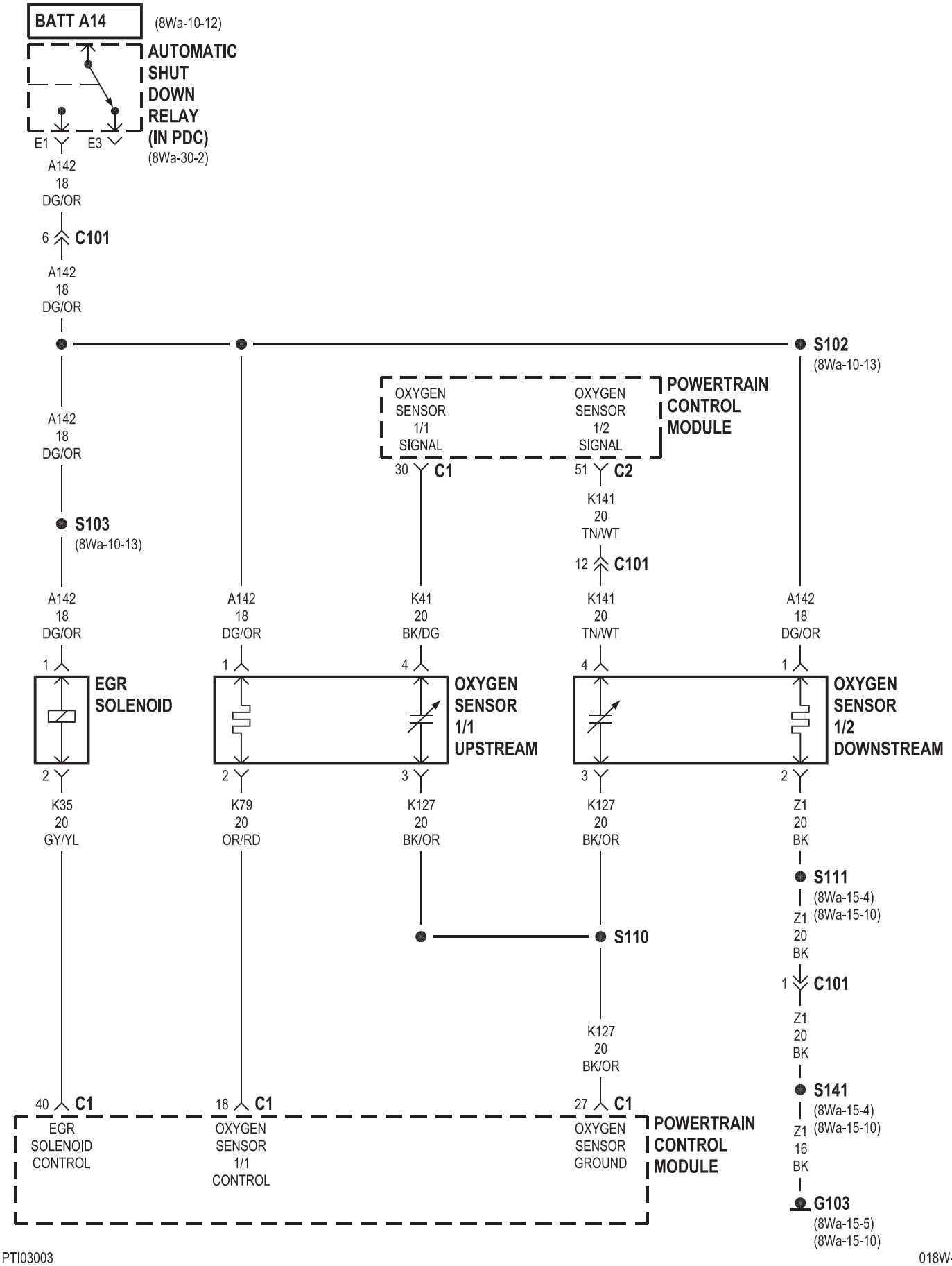
BATT A14
(8Wa-10-12)
AUTOMATIC SHUT DOWN RELAY (IN PDC)
(8Wa-30-2)
E1
E3
A142 18 DG/OR
6 C101
A142 18 DG/OR
S102
(8Wa-10-13)
A142 18 DG/OR
S103
(8Wa-10-13)
OXYGEN SENSOR 1/1 SIGNAL
OXYGEN SENSOR 1/2 SIGNAL
POWERTRAIN CONTROL MODULE
30 C1
51 C2
K141 20 TN/WT
12 C101
A142 18 DG/OR
A142 18 DG/OR
K41 20 BK/DG
K141 20 TN/WT
A142 18 DG/OR
1
1
4
4
1
EGR SOLENOID
OXYGEN SENSOR 1/1 UPSTREAM
OXYGEN SENSOR 1/2 DOWNSTREAM
2
2
3
3
2
K35 20 GY/YL
K79 20 OR/RD
K127 20 BK/OR
K127 20 BK/OR
Z1 20 BK
S111
(8Wa-15-4)
(8Wa-15-10)
S110
Z1 20 BK
1 C101
Z1 20 BK
K127 20 BK/OR
S141
(8Wa-15-4)
(8Wa-15-10)
Z1 16 BK
G103
(8Wa-15-5)
(8Wa-15-10)
40 C1
18 C1
27 C1
EGR SOLENOID CONTROL
OXYGEN SENSOR 1/1 CONTROL
OXYGEN SENSOR GROUND
POWERTRAIN CONTROL MODULE

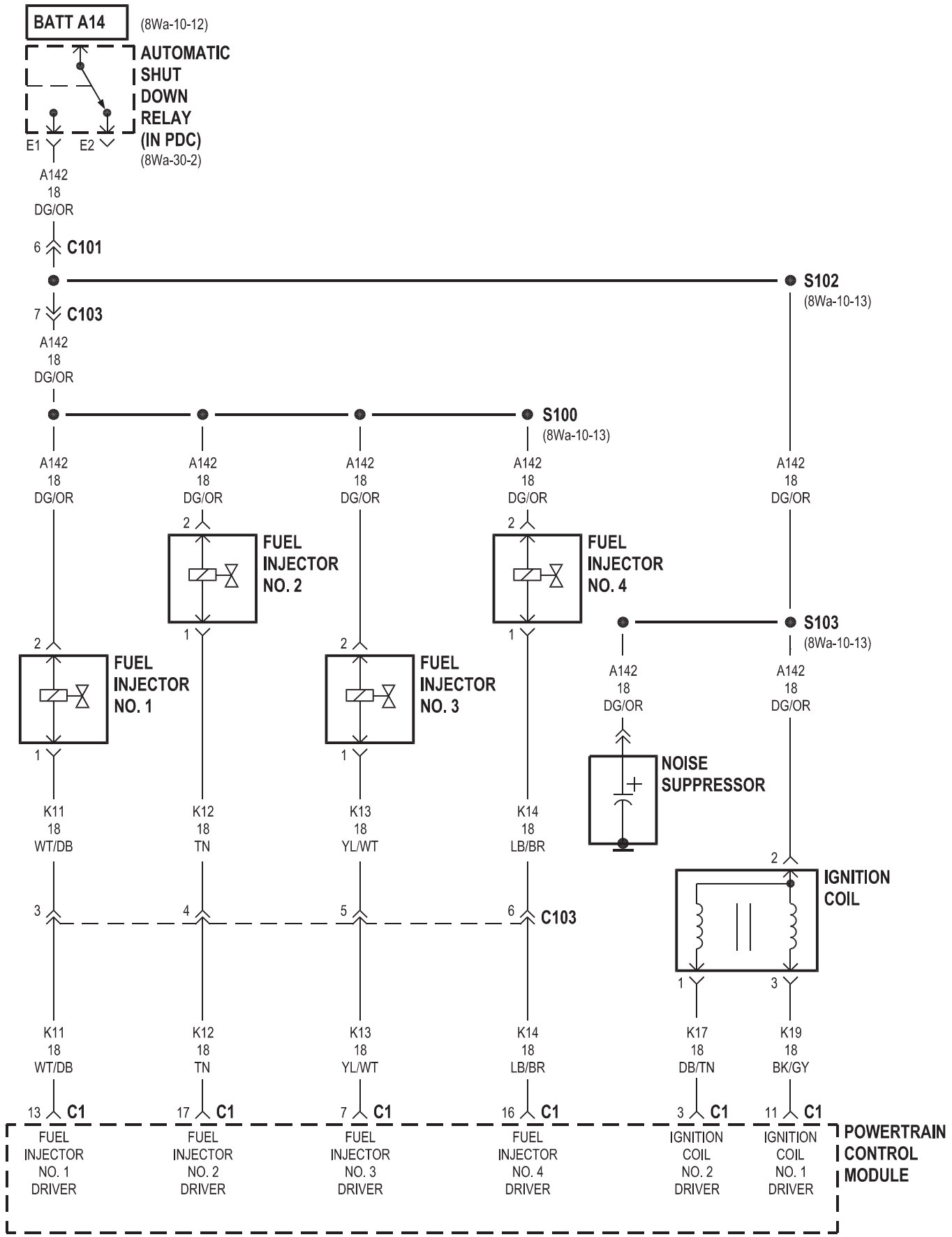
BATT A14
(8Wa-10-12)
AUTOMATIC SHUT DOWN RELAY (IN PDC)
(8Wa-30-2)
E1
E2
A142 18 DG/OR
6
C101
7
C103
S102
(8Wa-10-13)
S100
(8Wa-10-13)
S103
(8Wa-10-13)
FUEL INJECTOR NO. 1
FUEL INJECTOR NO. 2
FUEL INJECTOR NO. 3
FUEL INJECTOR NO. 4
NOISE SUPPRESSOR
IGNITION COIL
K11 18 WT/DB
K12 18 TN
K13 18 YL/WT
K14 18 LB/BR
K17 18 DB/TN
K19 18 BK/GY
13 C1
17 C1
7 C1
16 C1
3 C1
11 C1
FUEL INJECTOR NO. 1 DRIVER
FUEL INJECTOR NO. 2 DRIVER
FUEL INJECTOR NO. 3 DRIVER
FUEL INJECTOR NO. 4 DRIVER
IGNITION COIL NO. 2 DRIVER
IGNITION COIL NO. 1 DRIVER
POWERTRAIN CONTROL MODULE

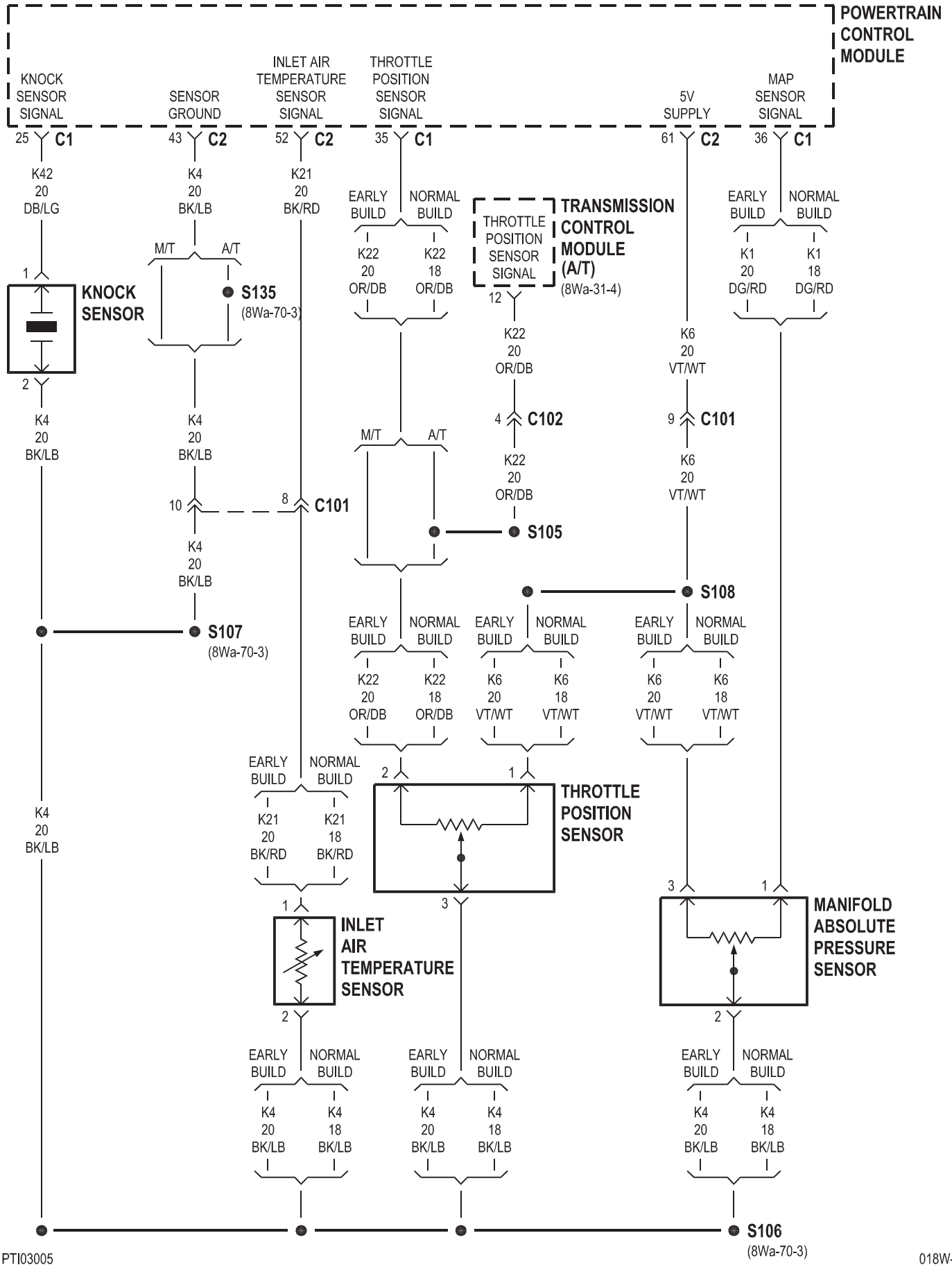
POWERTRAIN CONTROL MODULE
KNOCK SENSOR SIGNAL
SENSOR GROUND
INLET AIR TEMPERATURE SENSOR SIGNAL
THROTTLE POSITION SENSOR SIGNAL
5V SUPPLY
MAP SENSOR SIGNAL
25 C1
43 C2
52 C2
35 C1
61 C2
36 C1
K42 20 DB/LG
K4 20 BK/LB
K21 20 BK/RD
EARLY BUILD
NORMAL BUILD
K22 20 OR/DB
K22 18 OR/DB
THROTTLE POSITION SENSOR SIGNAL
TRANSMISSION CONTROL MODULE (A/T)
(8Wa-31-4)
K1 20 DG/RD
K1 18 DG/RD
M/T
A/T
KNOCK SENSOR
S135
(8Wa-70-3)
K22 20 OR/DB
K6 20 VT/WT
C102
C101
S105
S108
S107
(8Wa-70-3)
K6 20 VT/WT
K6 18 VT/WT
K21 20 BK/RD
K21 18 BK/RD
THROTTLE POSITION SENSOR
INLET AIR TEMPERATURE SENSOR
MANIFOLD ABSOLUTE PRESSURE SENSOR
K4 20 BK/LB
K4 18 BK/LB
S106
(8Wa-70-3)

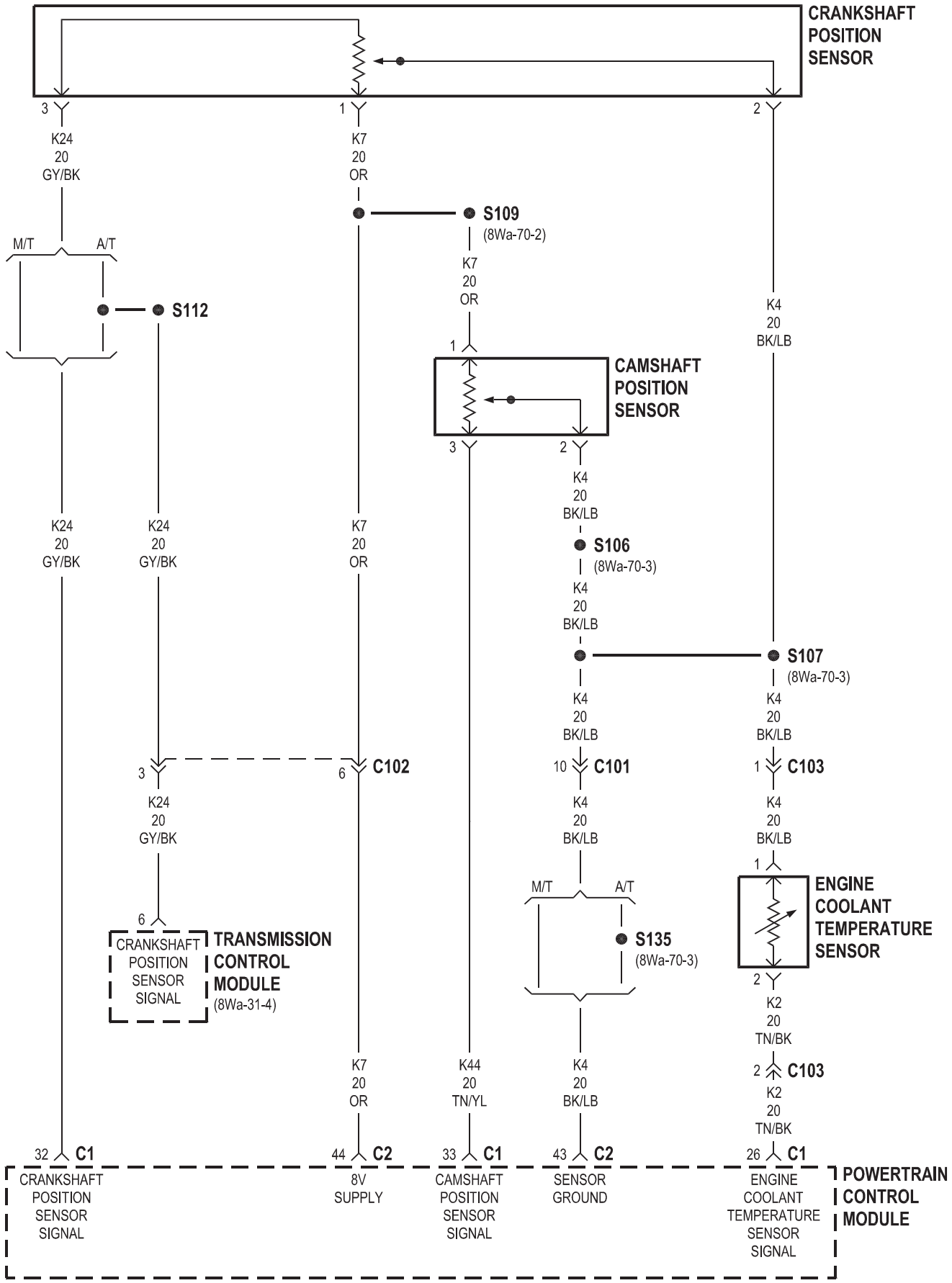
CRANKSHAFT POSITION SENSOR
3
1
2
K24 20 GY/BK
K7 20 OR
S109
(8Wa-70-2)
K7 20 OR
M/T
A/T
S112
K4 20 BK/LB
1
CAMSHAFT POSITION SENSOR
3
2
K4 20 BK/LB
S106
(8Wa-70-3)
K4 20 BK/LB
K24 20 GY/BK
K24 20 GY/BK
K7 20 OR
S107
(8Wa-70-3)
K4 20 BK/LB
K4 20 BK/LB
3
6
C102
10
C101
1
C103
K24 20 GY/BK
K4 20 BK/LB
K4 20 BK/LB
1
M/T
A/T
ENGINE COOLANT TEMPERATURE SENSOR
6
CRANKSHAFT POSITION SENSOR SIGNAL
TRANSMISSION CONTROL MODULE
(8Wa-31-4)
S135
(8Wa-70-3)
2
K2 20 TN/BK
K7 20 OR
K44 20 TN/YL
K4 20 BK/LB
2
C103
K2 20 TN/BK
32
C1
44
C2
33
C1
43
C2
26
C1
CRANKSHAFT POSITION SENSOR SIGNAL
8V SUPPLY
CAMSHAFT POSITION SENSOR SIGNAL
SENSOR GROUND
ENGINE COOLANT TEMPERATURE SENSOR SIGNAL
POWERTRAIN CONTROL MODULE

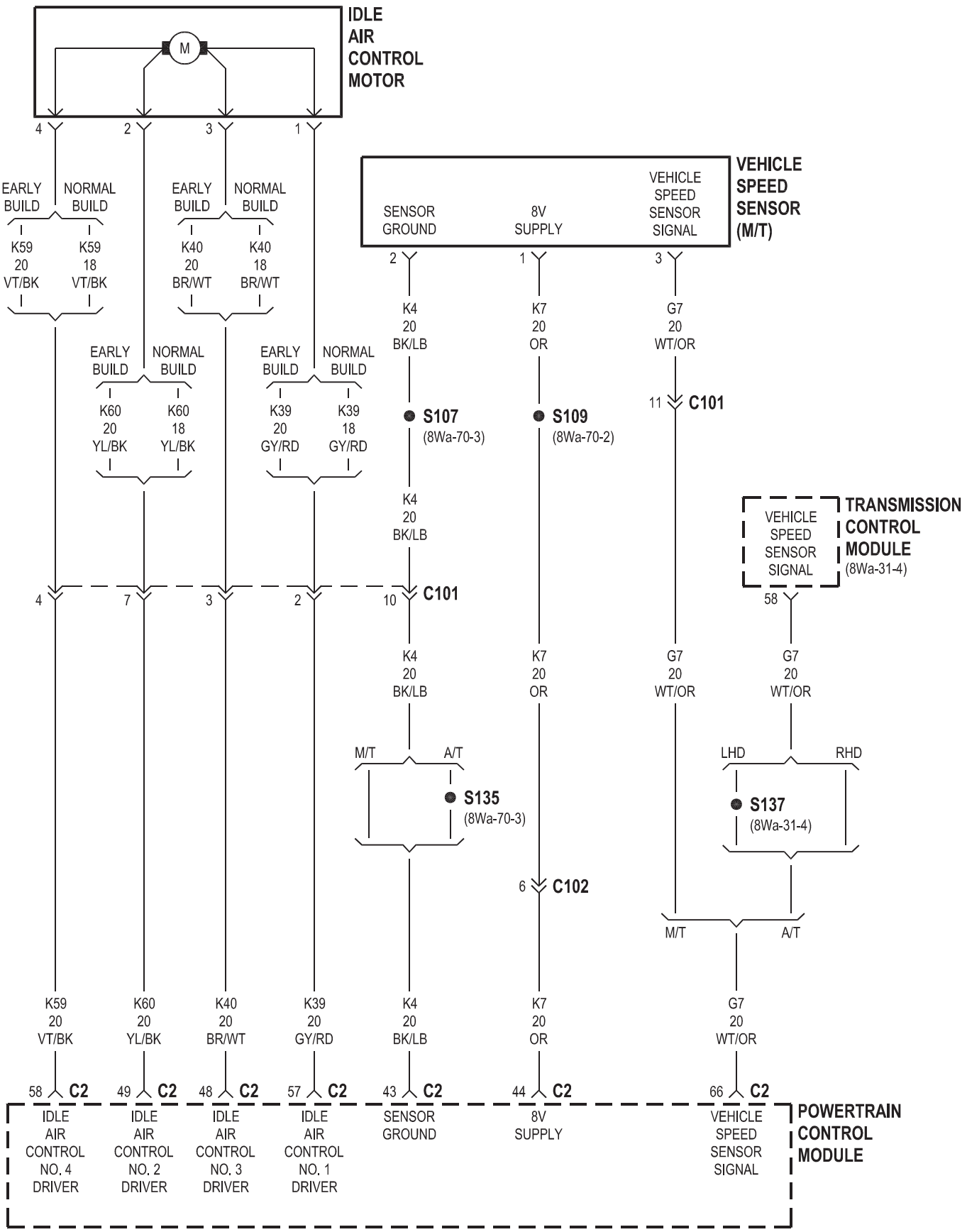
IDLE AIR CONTROL MOTOR
M
4
2
3
1
EARLY BUILD
NORMAL BUILD
K59 20 VT/BK
K59 18 VT/BK
K40 20 BR/WT
K40 18 BR/WT
K60 20 YL/BK
K60 18 YL/BK
K39 20 GY/RD
K39 18 GY/RD
VEHICLE SPEED SENSOR (M/T)
SENSOR GROUND
8V SUPPLY
VEHICLE SPEED SENSOR SIGNAL
K4 20 BK/LB
K7 20 OR
G7 20 WT/OR
S107
(8Wa-70-3)
S109
(8Wa-70-2)
C101
TRANSMISSION CONTROL MODULE
(8Wa-31-4)
VEHICLE SPEED SENSOR SIGNAL
58
10
M/T
A/T
S135
(8Wa-70-3)
LHD
RHD
S137
(8Wa-31-4)
C102
6
7
C2
IDLE AIR CONTROL NO. 4 DRIVER
IDLE AIR CONTROL NO. 2 DRIVER
IDLE AIR CONTROL NO. 3 DRIVER
IDLE AIR CONTROL NO. 1 DRIVER
SENSOR GROUND
8V SUPPLY
VEHICLE SPEED SENSOR SIGNAL
POWERTRAIN CONTROL MODULE
58
49
48
57
43
44
66

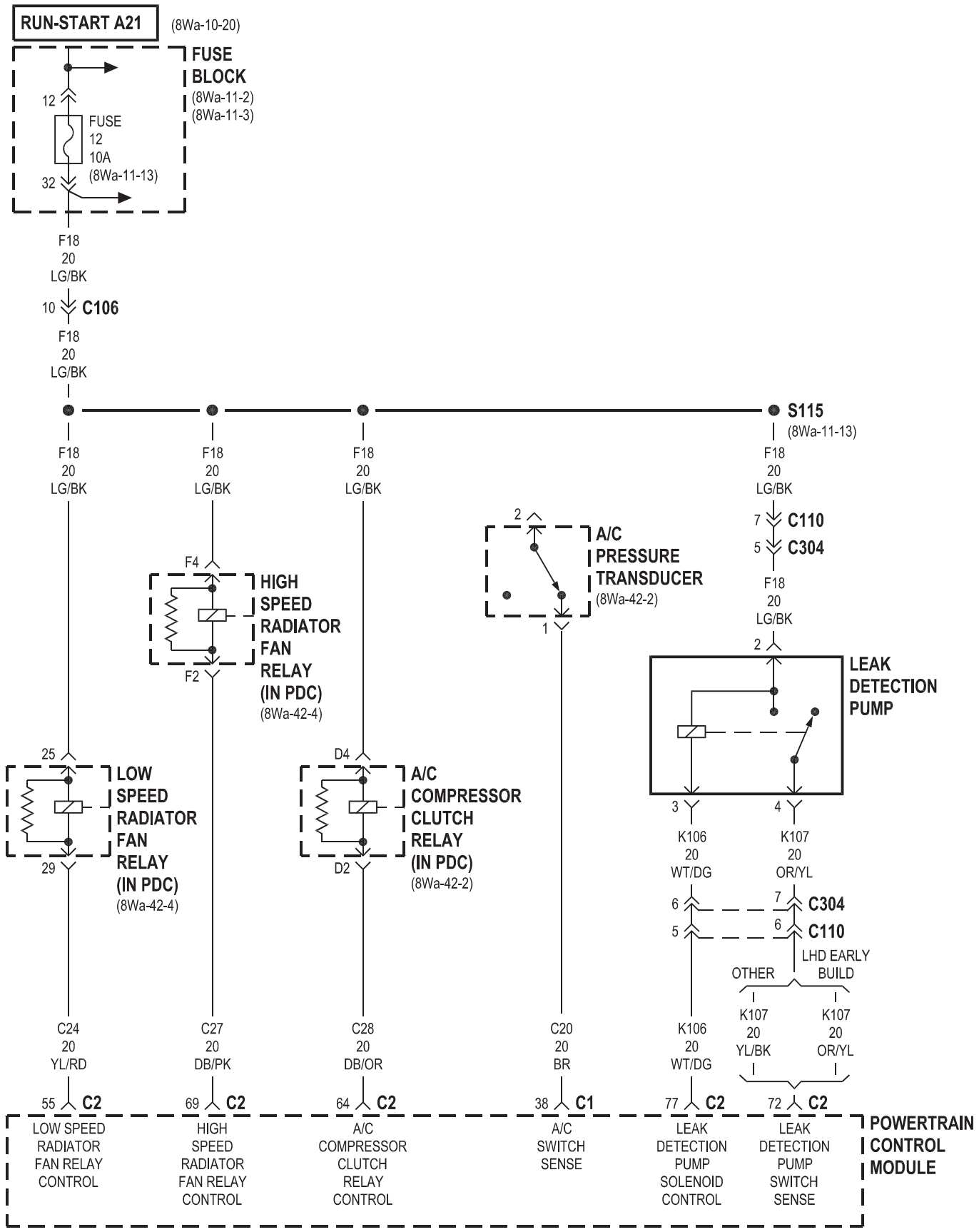
RUN-START A21
(8Wa-10-20)
FUSE BLOCK
(8Wa-11-2)
(8Wa-11-3)
12
FUSE 12 10A
(8Wa-11-13)
32
F18 20 LG/BK
10
C106
F18 20 LG/BK
S115
(8Wa-11-13)
F18 20 LG/BK
F18 20 LG/BK
F18 20 LG/BK
F18 20 LG/BK
7
C110
5
C304
F18 20 LG/BK
2
A/C PRESSURE TRANSDUCER
(8Wa-42-2)
1
F4
HIGH SPEED RADIATOR FAN RELAY (IN PDC)
(8Wa-42-4)
F2
2
LEAK DETECTION PUMP
25
LOW SPEED RADIATOR FAN RELAY (IN PDC)
(8Wa-42-4)
29
D4
A/C COMPRESSOR CLUTCH RELAY (IN PDC)
(8Wa-42-2)
D2
3
4
K106 20 WT/DG
K107 20 OR/YL
6
5
7
C304
6
C110
LHD EARLY BUILD
OTHER
K107 20 YL/BK
K107 20 OR/YL
C24 20 YL/RD
C27 20 DB/PK
C28 20 DB/OR
C20 20 BR
K106 20 WT/DG
55 C2
69 C2
64 C2
38 C1
77 C2
72 C2
LOW SPEED RADIATOR FAN RELAY CONTROL
HIGH SPEED RADIATOR FAN RELAY CONTROL
A/C COMPRESSOR CLUTCH RELAY CONTROL
A/C SWITCH SENSE
LEAK DETECTION PUMP SOLENOID CONTROL
LEAK DETECTION PUMP SWITCH SENSE
POWERTRAIN CONTROL MODULE

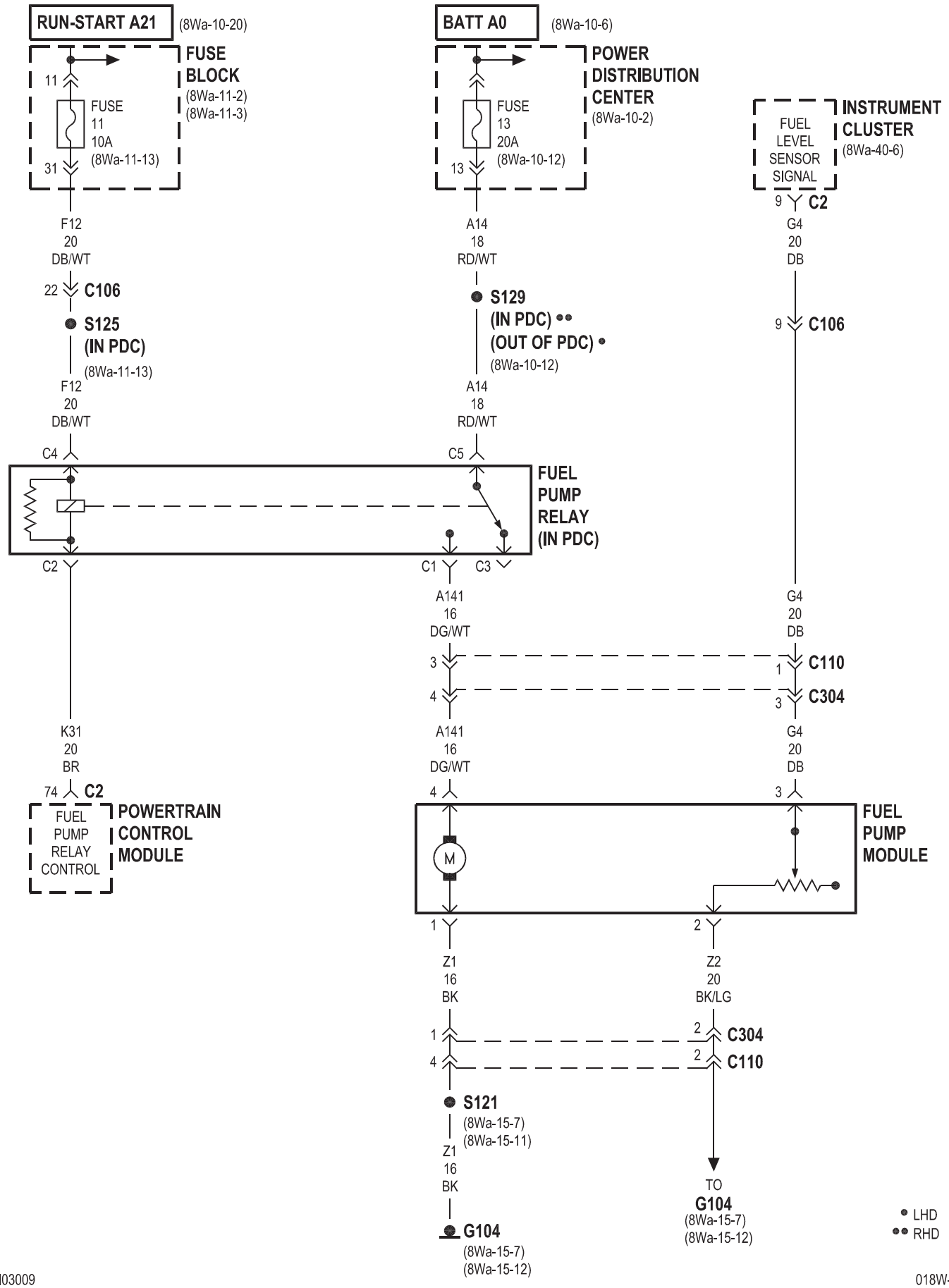
RUN-START A21
(8Wa-10-20)
FUSE BLOCK
(8Wa-11-2)
(8Wa-11-3)
11
FUSE 11 10A
(8Wa-11-13)
31
F12 20 DB/WT
22
C106
S125 (IN PDC)
(8Wa-11-13)
F12 20 DB/WT
C4
C2
K31 20 BR
74
C2
FUEL PUMP RELAY CONTROL
POWERTRAIN CONTROL MODULE
BATT A0
(8Wa-10-6)
POWER DISTRIBUTION CENTER
(8Wa-10-2)
FUSE 13 20A
(8Wa-10-12)
13
A14 18 RD/WT
S129 (IN PDC) •• (OUT OF PDC) •
(8Wa-10-12)
A14 18 RD/WT
C5
FUEL PUMP RELAY (IN PDC)
C1
C3
A141 16 DG/WT
3
4
A141 16 DG/WT
4
M
1
Z1 16 BK
1
4
S121
(8Wa-15-7)
(8Wa-15-11)
Z1 16 BK
G104
(8Wa-15-7)
(8Wa-15-12)
FUEL LEVEL SENSOR SIGNAL
INSTRUMENT CLUSTER
(8Wa-40-6)
9
C2
G4 20 DB
9
C106
G4 20 DB
1
C110
3
C304
G4 20 DB
3
FUEL PUMP MODULE
2
Z2 20 BK/LG
2
C304
2
C110
TO
G104
(8Wa-15-7)
(8Wa-15-12)
• LHD
•• RHD

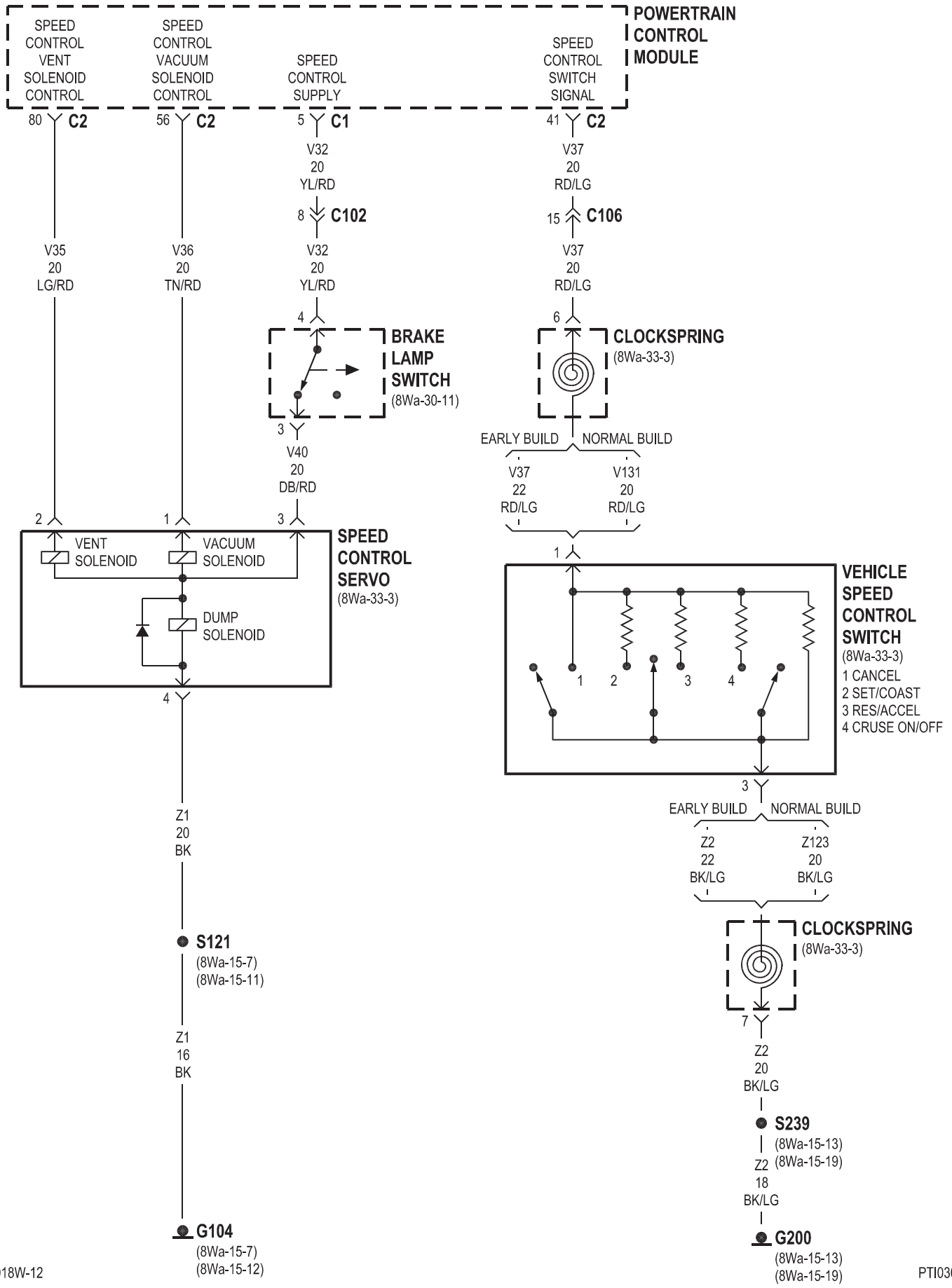
POWERTRAIN CONTROL MODULE
SPEED CONTROL VENT SOLENOID CONTROL
SPEED CONTROL VACUUM SOLENOID CONTROL
SPEED CONTROL SUPPLY
SPEED CONTROL SWITCH SIGNAL
80 C2
56 C2
5 C1
41 C2
V32 20 YL/RD
V37 20 RD/LG
8 C102
15 C106
V35 20 LG/RD
V36 20 TN/RD
V32 20 YL/RD
V37 20 RD/LG
4
6
BRAKE LAMP SWITCH
(8Wa-30-11)
CLOCKSPRING
(8Wa-33-3)
3
V40 20 DB/RD
EARLY BUILD
NORMAL BUILD
V37 22 RD/LG
V131 20 RD/LG
2
1
3
VENT SOLENOID
VACUUM SOLENOID
DUMP SOLENOID
SPEED CONTROL SERVO
(8Wa-33-3)
1
VEHICLE SPEED CONTROL SWITCH
(8Wa-33-3)
1 CANCEL
2 SET/COAST
3 RES/ACCEL
4 CRUSE ON/OFF
1
2
3
4
3
EARLY BUILD
NORMAL BUILD
Z2 22 BK/LG
Z123 20 BK/LG
4
Z1 20 BK
S121
(8Wa-15-7)
(8Wa-15-11)
CLOCKSPRING
(8Wa-33-3)
7
Z1 16 BK
Z2 20 BK/LG
S239
(8Wa-15-13)
(8Wa-15-19)
Z2 18 BK/LG
G104
(8Wa-15-7)
(8Wa-15-12)
G200
(8Wa-15-13)
(8Wa-15-19)

PTI03010

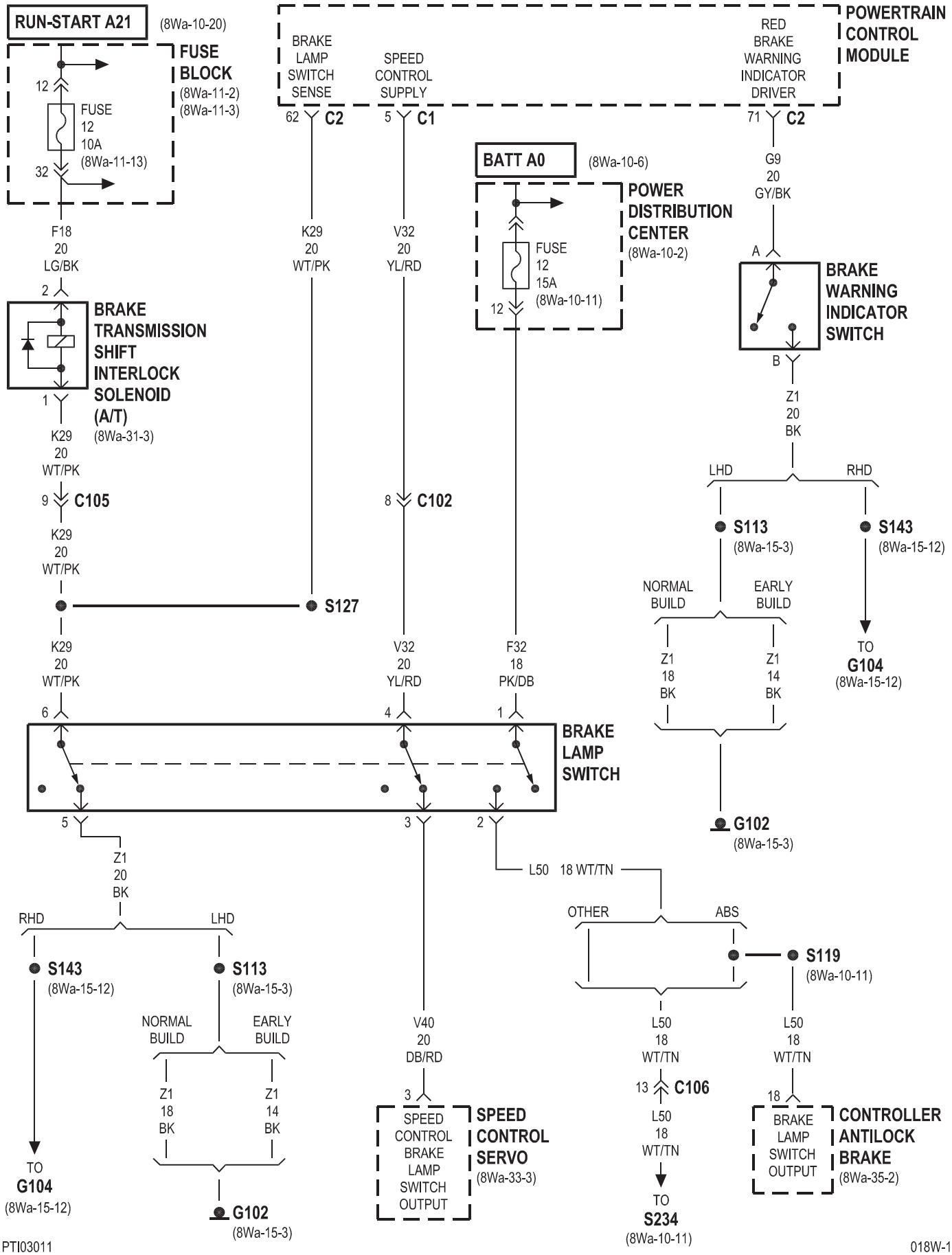
RUN-START A21
(8Wa-10-20)
FUSE BLOCK
(8Wa-11-2)
(8Wa-11-3)
12
FUSE
12
10A
(8Wa-11-13)
32
F18
20
LG/BK
2
BRAKE TRANSMISSION SHIFT INTERLOCK SOLENOID (A/T)
(8Wa-31-3)
1
K29
20
WT/PK
9
C105
K29
20
WT/PK
S127
K29
20
WT/PK
6
BRAKE LAMP SWITCH SENSE
SPEED CONTROL SUPPLY
RED BRAKE WARNING INDICATOR DRIVER
POWERTRAIN CONTROL MODULE
62
C2
5
C1
71
C2
K29
20
WT/PK
V32
20
YL/RD
8
C102
V32
20
YL/RD
4
BATT A0
(8Wa-10-6)
POWER DISTRIBUTION CENTER
(8Wa-10-2)
FUSE
12
15A
(8Wa-10-11)
12
F32
18
PK/DB
1
G9
20
GY/BK
A
BRAKE WARNING INDICATOR SWITCH
B
Z1
20
BK
LHD
RHD
S113
(8Wa-15-3)
S143
(8Wa-15-12)
NORMAL BUILD
EARLY BUILD
Z1
18
BK
Z1
14
BK
TO
G104
(8Wa-15-12)
G102
(8Wa-15-3)
BRAKE LAMP SWITCH
5
3
2
Z1
20
BK
L50 18 WT/TN
RHD
LHD
OTHER
ABS
S143
(8Wa-15-12)
S113
(8Wa-15-3)
S119
(8Wa-10-11)
NORMAL BUILD
EARLY BUILD
Z1
18
BK
Z1
14
BK
TO
G104
(8Wa-15-12)
G102
(8Wa-15-3)
V40
20
DB/RD
3
SPEED CONTROL BRAKE LAMP SWITCH OUTPUT
SPEED CONTROL SERVO
(8Wa-33-3)
L50
18
WT/TN
13
C106
L50
18
WT/TN
TO
S234
(8Wa-10-11)
L50
18
WT/TN
18
BRAKE LAMP SWITCH OUTPUT
CONTROLLER ANTILOCK BRAKE
(8Wa-35-2)
PTI03011
018W-12

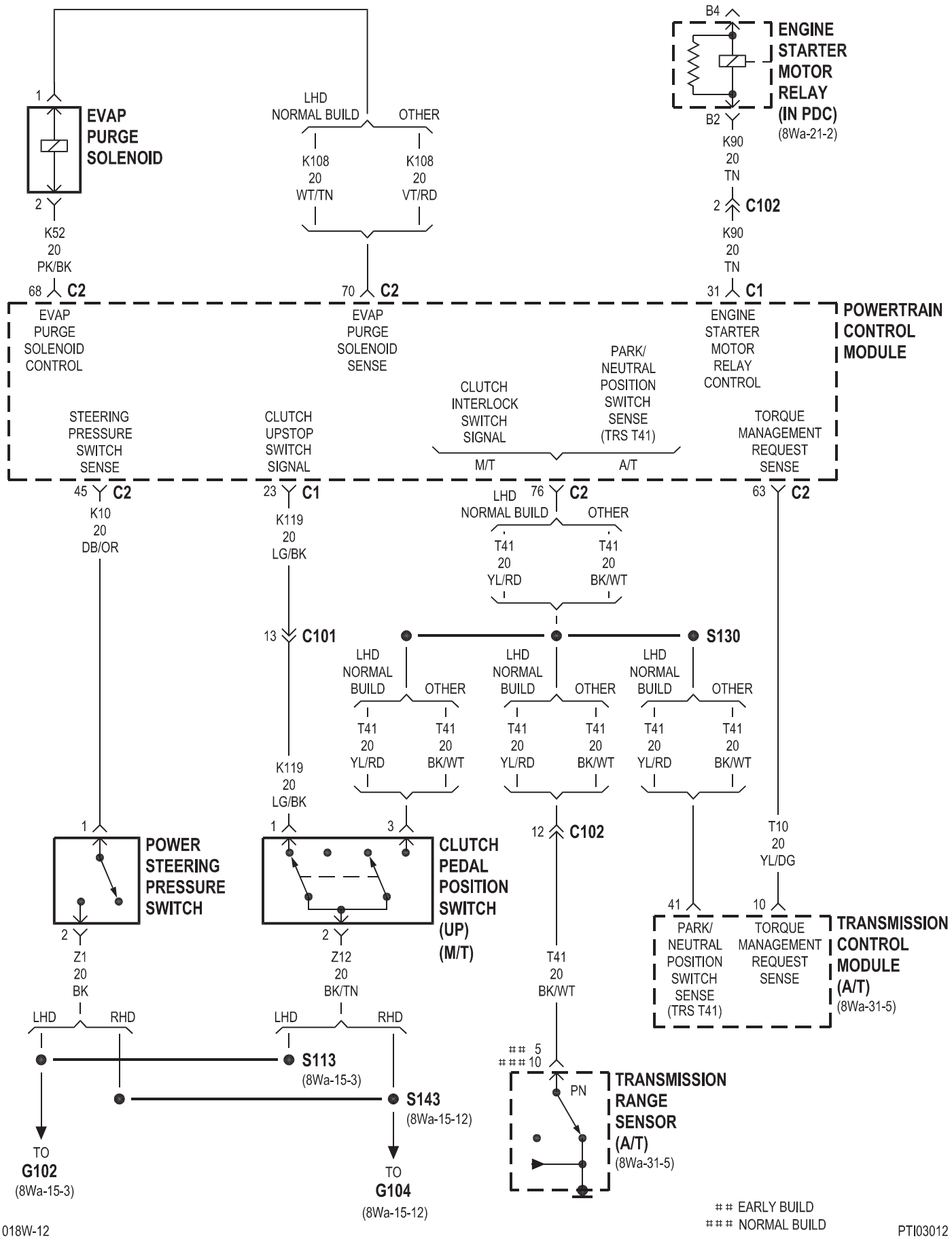
EVAP PURGE SOLENOID
1
2
K52
20
PK/BK
LHD
NORMAL BUILD
OTHER
K108
20
WT/TN
K108
20
VT/RD
B4
B2
ENGINE STARTER MOTOR RELAY (IN PDC)
(8Wa-21-2)
K90
20
TN
2
C102
K90
20
TN
68
C2
70
C2
31
C1
POWERTRAIN CONTROL MODULE
EVAP PURGE SOLENOID CONTROL
EVAP PURGE SOLENOID SENSE
ENGINE STARTER MOTOR RELAY CONTROL
PARK/ NEUTRAL POSITION SWITCH SENSE (TRS T41)
CLUTCH INTERLOCK SWITCH SIGNAL
STEERING PRESSURE SWITCH SENSE
CLUTCH UPSTOP SWITCH SIGNAL
TORQUE MANAGEMENT REQUEST SENSE
M/T
A/T
45
C2
23
C1
76
C2
63
C2
K10
20
DB/OR
K119
20
LG/BK
T41
20
YL/RD
T41
20
BK/WT
13
C101
S130
K119
20
LG/BK
12
C102
T10
20
YL/DG
POWER STEERING PRESSURE SWITCH
CLUTCH PEDAL POSITION SWITCH (UP) (M/T)
Z1
20
BK
Z12
20
BK/TN
T41
20
BK/WT
41
10
PARK/ NEUTRAL POSITION SWITCH SENSE (TRS T41)
TORQUE MANAGEMENT REQUEST SENSE
TRANSMISSION CONTROL MODULE (A/T)
(8Wa-31-5)
LHD
RHD
S113
(8Wa-15-3)
S143
(8Wa-15-12)
TO
G102
(8Wa-15-3)
TO
G104
(8Wa-15-12)
5
10
PN
TRANSMISSION RANGE SENSOR (A/T)
(8Wa-31-5)
EARLY BUILD
NORMAL BUILD

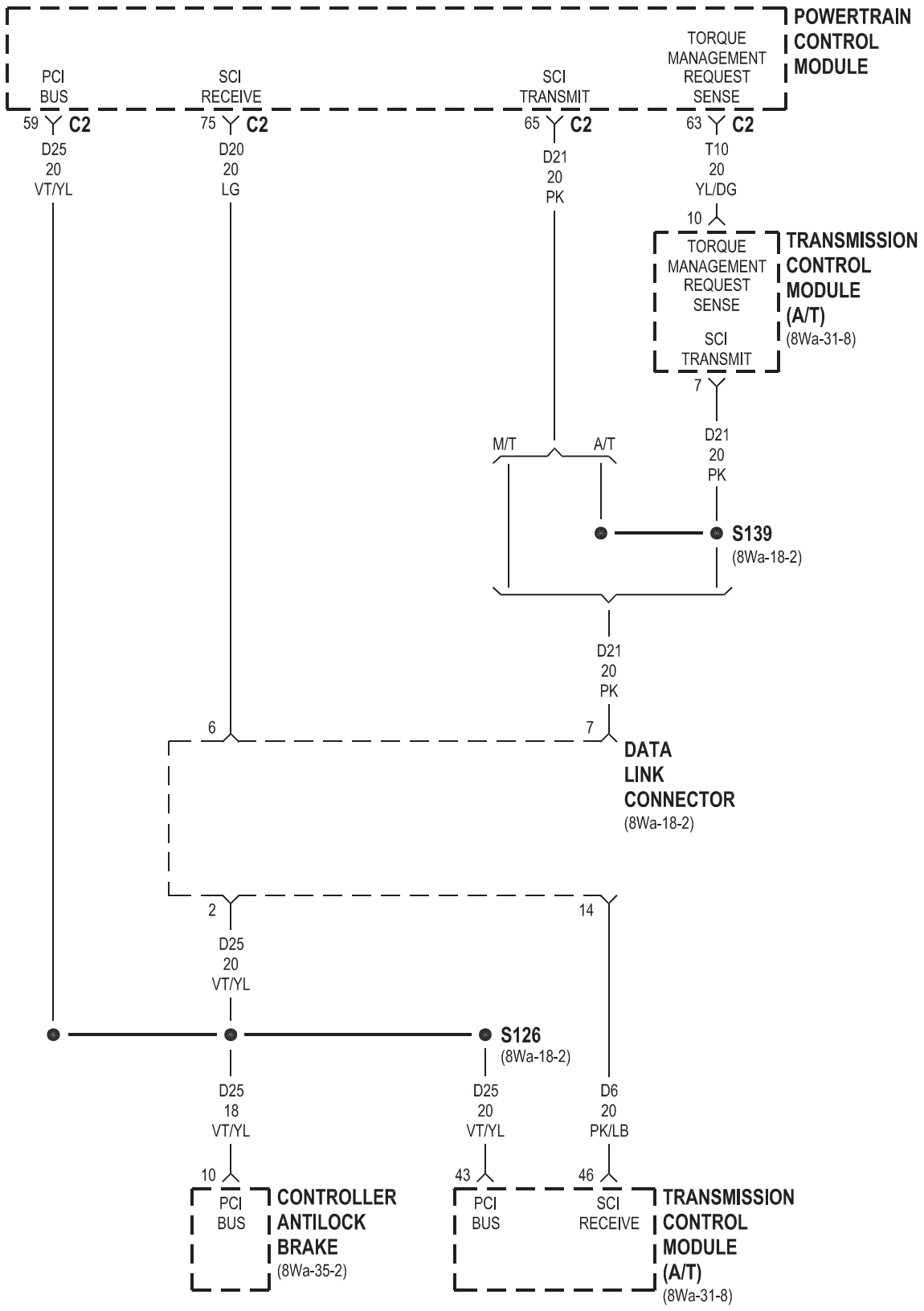
POWERTRAIN CONTROL MODULE
PCI BUS
SCI RECEIVE
SCI TRANSMIT
TORQUE MANAGEMENT REQUEST SENSE
59 C2
75 C2
65 C2
63 C2
D25 20 VT/YL
D20 20 LG
D21 20 PK
T10 20 YL/DG
10
TORQUE MANAGEMENT REQUEST SENSE
SCI TRANSMIT
TRANSMISSION CONTROL MODULE (A/T)
(8Wa-31-8)
7
D21 20 PK
M/T
A/T
S139
(8Wa-18-2)
D21 20 PK
6
7
DATA LINK CONNECTOR
(8Wa-18-2)
2
14
D25 20 VT/YL
S126
(8Wa-18-2)
D25 18 VT/YL
D25 20 VT/YL
D6 20 PK/LB
10
43
46
PCI BUS
CONTROLLER ANTILOCK BRAKE
(8Wa-35-2)
PCI BUS
SCI RECEIVE
TRANSMISSION CONTROL MODULE (A/T)
(8Wa-31-8)

● LHD
●● RHD

2001 PT CRUISER

8W-31 TRANSMISSION CONTROL SYSTEM

Component	Page
Brake Lamp Switch	8Wa-31-3
Brake Transmission Shift Interlock Solenoid	8Wa-31-3
Crankshaft Position Sensor	8Wa-31-4
Data Link Connector	8Wa-31-8
Fuse 6 (FB)	8Wa-31-5
Fuse 12 (FB)	8Wa-31-2, 3
Fuse 15 (PDC)	8Wa-31-2
Fuse Block	8Wa-31-2, 3, 5
G102	8Wa-31-2
G103	8Wa-31-2
Ignition Switch	8Wa-31-5
Input Speed Sensor	8Wa-31-3
Left Back-Up Lamp	8Wa-31-5
Output Speed Sensor	8Wa-31-3
Power Distribution Center	8Wa-31-2, 6, 7
Powertrain Control Module	8Wa-31-3, 4, 5, 8
Right Back-Up Lamp	8Wa-31-5
Throttle Position Sensor	8Wa-31-4
Transmission Control Module	8Wa-31-2, 3, 4, 5, 6, 7, 8
Transmission Control Relay	8Wa-31-2, 6, 7
Transmission Range Sensor	8Wa-31-3, 5
Transmission Solenoid/Pressure Switch Assembly	8Wa-31-6, 7

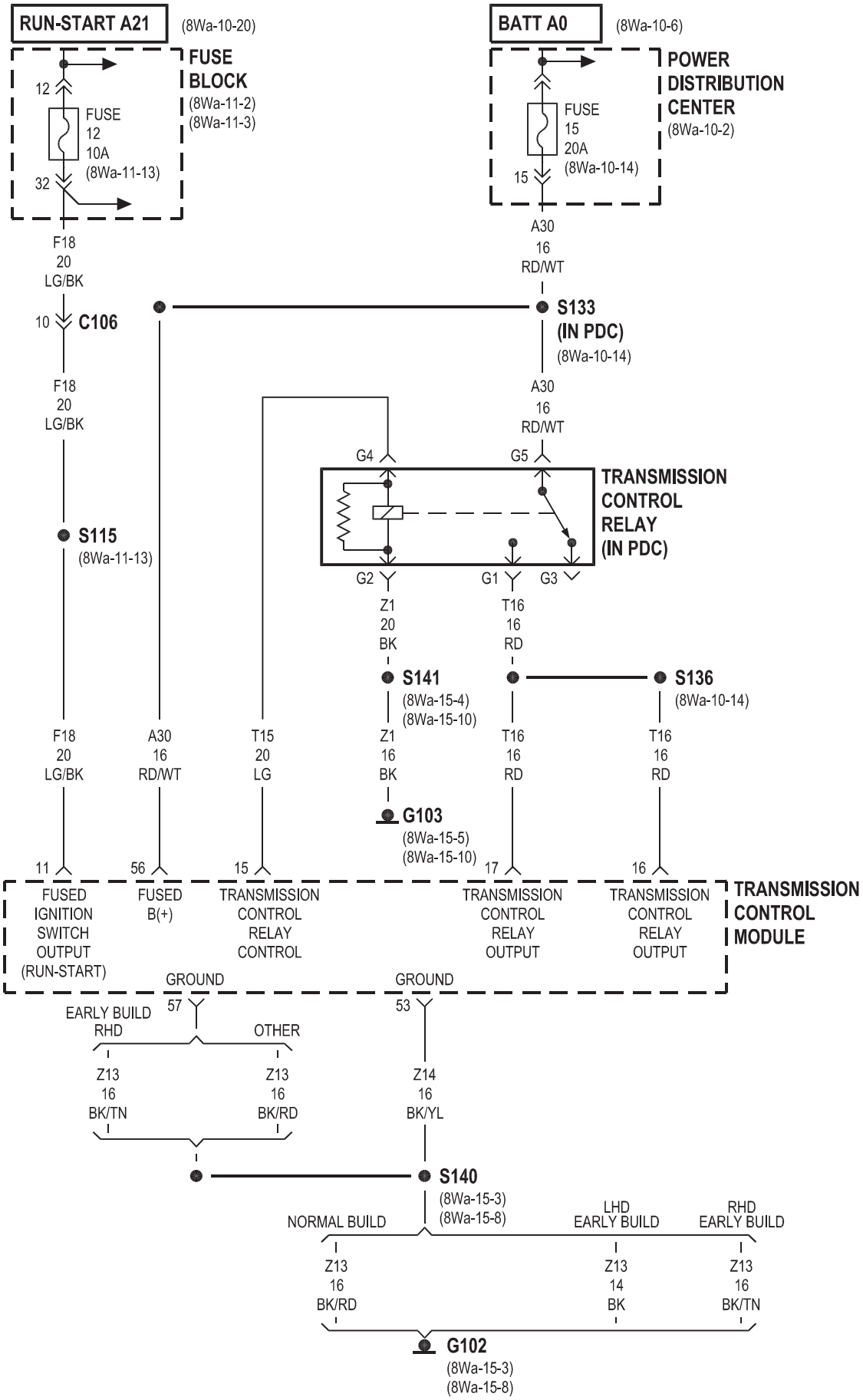
RUN-START A21
(8Wa-10-20)
FUSE BLOCK
(8Wa-11-2)
(8Wa-11-3)
12
FUSE 12 10A
(8Wa-11-13)
32
F18 20 LG/BK
10
C106
F18 20 LG/BK
S115
(8Wa-11-13)
BATT A0
(8Wa-10-6)
POWER DISTRIBUTION CENTER
(8Wa-10-2)
FUSE 15 20A
(8Wa-10-14)
15
A30 16 RD/WT
S133
(IN PDC)
(8Wa-10-14)
A30 16 RD/WT
G4
G5
TRANSMISSION CONTROL RELAY (IN PDC)
G2
G1
G3
Z1 20 BK
T16 16 RD
S141
(8Wa-15-4)
(8Wa-15-10)
S136
(8Wa-10-14)
F18 20 LG/BK
A30 16 RD/WT
T15 20 LG
Z1 16 BK
T16 16 RD
T16 16 RD
G103
(8Wa-15-5)
(8Wa-15-10)
11
56
15
17
16
FUSED IGNITION SWITCH OUTPUT (RUN-START)
FUSED B(+)
TRANSMISSION CONTROL RELAY CONTROL
TRANSMISSION CONTROL RELAY OUTPUT
TRANSMISSION CONTROL RELAY OUTPUT
TRANSMISSION CONTROL MODULE
GROUND
57
GROUND
53
EARLY BUILD RHD
OTHER
Z13 16 BK/TN
Z13 16 BK/RD
Z14 16 BK/YL
S140
(8Wa-15-3)
(8Wa-15-8)
NORMAL BUILD
LHD EARLY BUILD
RHD EARLY BUILD
Z13 16 BK/RD
Z13 14 BK
Z13 16 BK/TN
G102
(8Wa-15-3)
(8Wa-15-8)

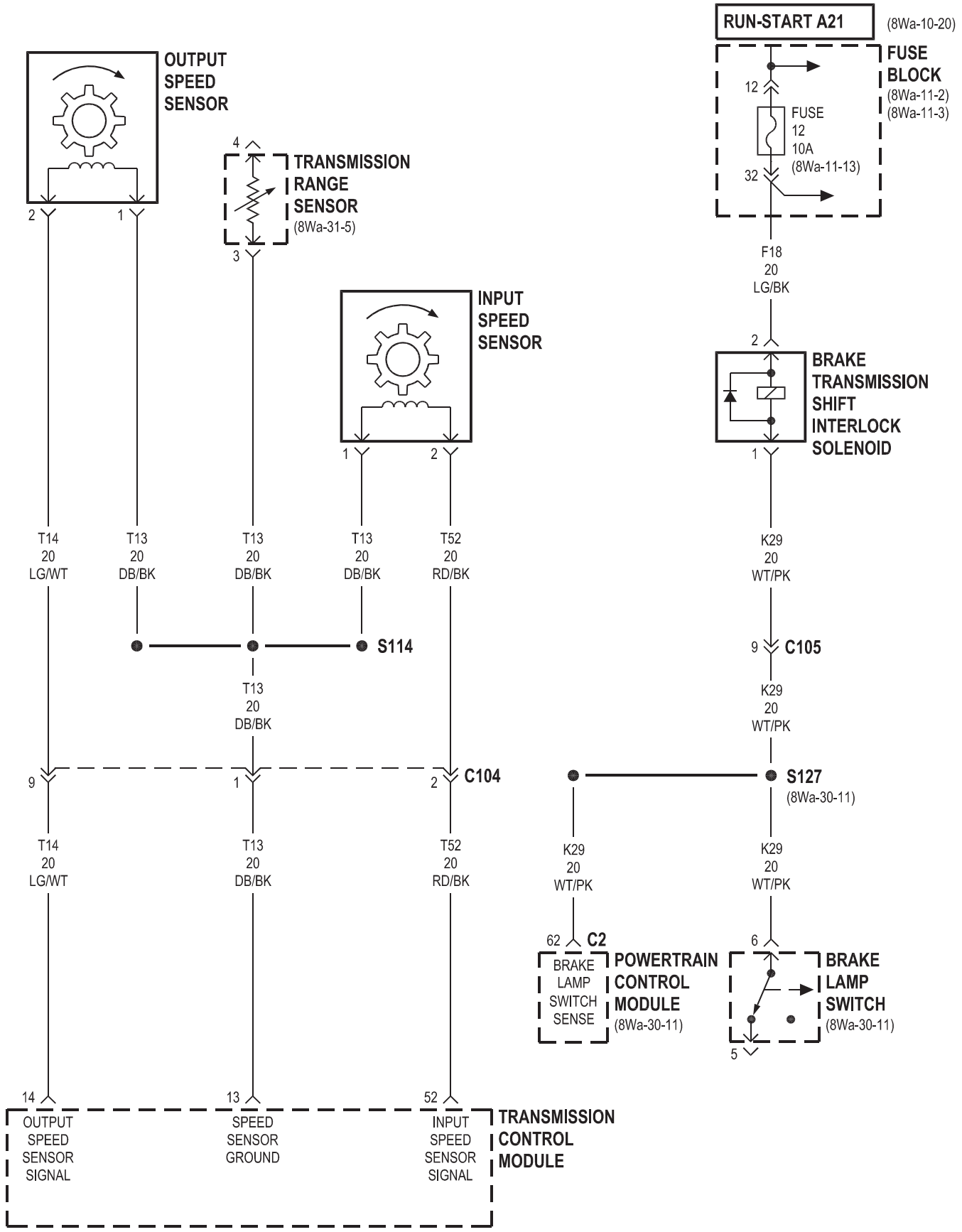
RUN-START A21
(8Wa-10-20)
FUSE BLOCK
(8Wa-11-2)
(8Wa-11-3)
12
FUSE 12 10A
(8Wa-11-13)
32
F18 20 LG/BK
2
BRAKE TRANSMISSION SHIFT INTERLOCK SOLENOID
1
K29 20 WT/PK
9
C105
K29 20 WT/PK
S127
(8Wa-30-11)
K29 20 WT/PK
K29 20 WT/PK
62
C2
BRAKE LAMP SWITCH SENSE
POWERTRAIN CONTROL MODULE
(8Wa-30-11)
6
BRAKE LAMP SWITCH
(8Wa-30-11)
5
OUTPUT SPEED SENSOR
2
1
4
TRANSMISSION RANGE SENSOR
(8Wa-31-5)
3
INPUT SPEED SENSOR
1
2
T14 20 LG/WT
T13 20 DB/BK
T13 20 DB/BK
T13 20 DB/BK
T52 20 RD/BK
S114
T13 20 DB/BK
9
1
2
C104
T14 20 LG/WT
T13 20 DB/BK
T52 20 RD/BK
14
13
52
OUTPUT SPEED SENSOR SIGNAL
SPEED SENSOR GROUND
INPUT SPEED SENSOR SIGNAL
TRANSMISSION CONTROL MODULE

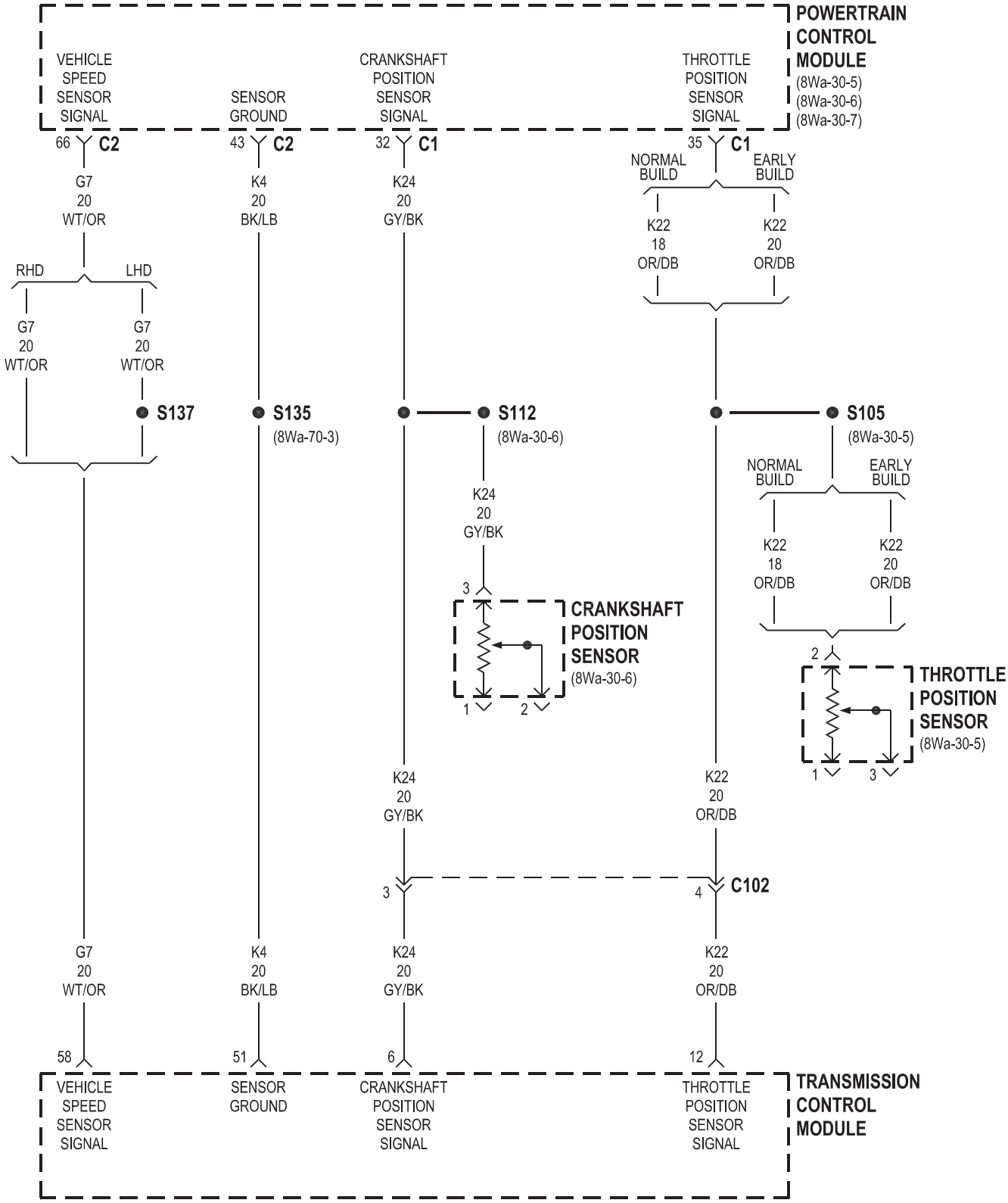
POWERTRAIN CONTROL MODULE
(8Wa-30-5)
(8Wa-30-6)
(8Wa-30-7)
VEHICLE SPEED SENSOR SIGNAL
SENSOR GROUND
CRANKSHAFT POSITION SENSOR SIGNAL
THROTTLE POSITION SENSOR SIGNAL
66 C2
43 C2
32 C1
35 C1
G7 20 WT/OR
K4 20 BK/LB
K24 20 GY/BK
NORMAL BUILD
EARLY BUILD
K22 18 OR/DB
K22 20 OR/DB
RHD
LHD
G7 20 WT/OR
G7 20 WT/OR
S137
S135
(8Wa-70-3)
S112
(8Wa-30-6)
S105
(8Wa-30-5)
NORMAL BUILD
EARLY BUILD
K22 18 OR/DB
K22 20 OR/DB
K24 20 GY/BK
3
CRANKSHAFT POSITION SENSOR
(8Wa-30-6)
1
2
2
THROTTLE POSITION SENSOR
(8Wa-30-5)
1
3
K24 20 GY/BK
K22 20 OR/DB
3
4
C102
G7 20 WT/OR
K4 20 BK/LB
K24 20 GY/BK
K22 20 OR/DB
58
51
6
12
VEHICLE SPEED SENSOR SIGNAL
SENSOR GROUND
CRANKSHAFT POSITION SENSOR SIGNAL
THROTTLE POSITION SENSOR SIGNAL
TRANSMISSION CONTROL MODULE

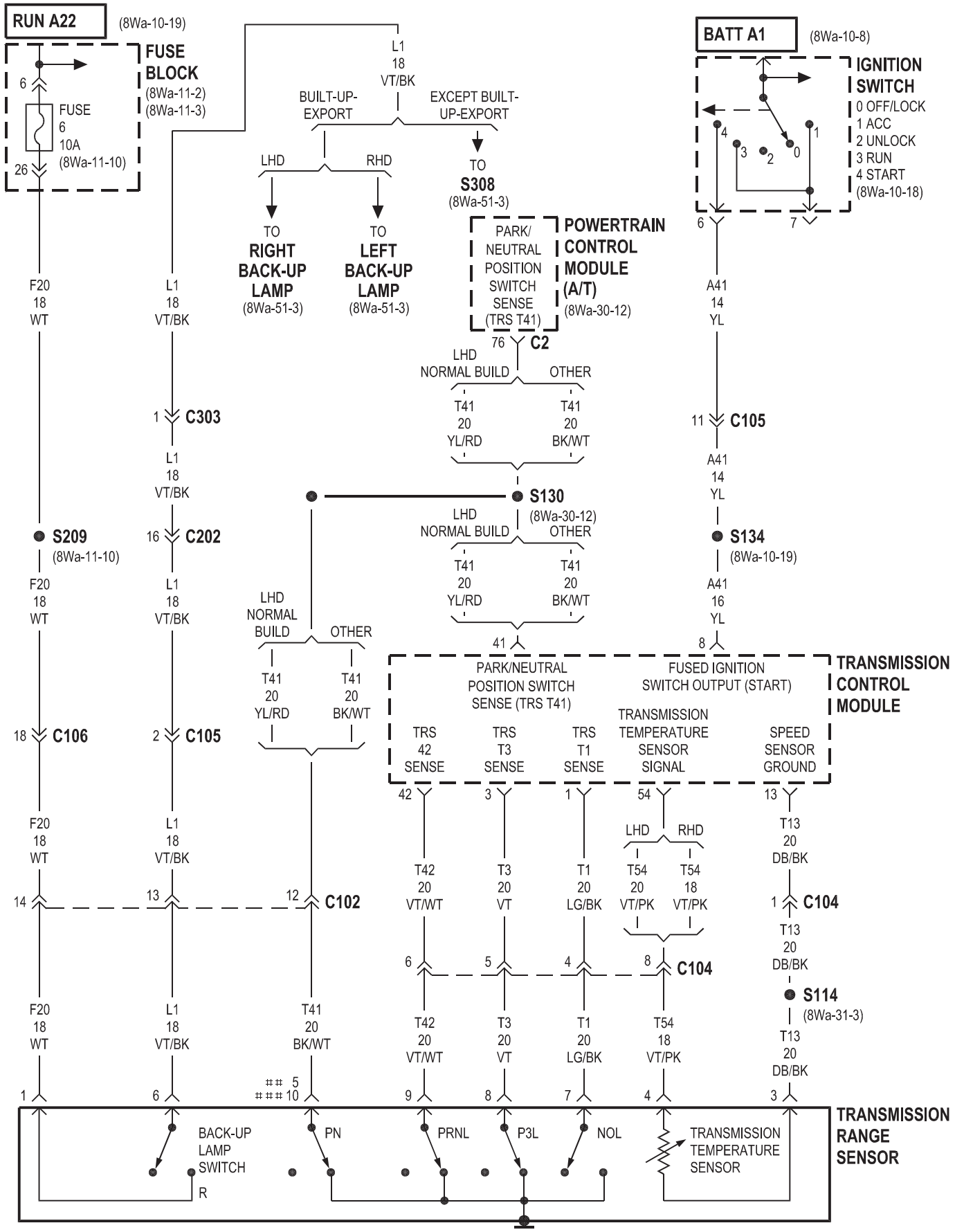
RUN A22
(8Wa-10-19)
FUSE BLOCK
(8Wa-11-2)
(8Wa-11-3)
FUSE 6 10A
(8Wa-11-10)
BATT A1
(8Wa-10-8)
IGNITION SWITCH
0 OFF/LOCK
1 ACC
2 UNLOCK
3 RUN
4 START
(8Wa-10-18)
L1 18 VT/BK
BUILT-UP-EXPORT
EXCEPT BUILT-UP-EXPORT
LHD
RHD
TO S308
(8Wa-51-3)
TO RIGHT BACK-UP LAMP
(8Wa-51-3)
TO LEFT BACK-UP LAMP
(8Wa-51-3)
PARK/ NEUTRAL POSITION SWITCH SENSE (TRS T41)
POWERTRAIN CONTROL MODULE (A/T)
(8Wa-30-12)
F20 18 WT
L1 18 VT/BK
A41 14 YL
C303
C105
C2
LHD NORMAL BUILD
OTHER
T41 20 YL/RD
T41 20 BK/WT
S130
(8Wa-30-12)
S209
(8Wa-11-10)
C202
S134
(8Wa-10-19)
A41 16 YL
C106
C105
PARK/NEUTRAL POSITION SWITCH SENSE (TRS T41)
FUSED IGNITION SWITCH OUTPUT (START)
TRANSMISSION CONTROL MODULE
TRS 42 SENSE
TRS T3 SENSE
TRS T1 SENSE
TRANSMISSION TEMPERATURE SENSOR SIGNAL
SPEED SENSOR GROUND
T42 20 VT/WT
T3 20 VT
T1 20 LG/BK
T54 20 VT/PK
T54 18 VT/PK
T13 20 DB/BK
C102
C104
S114
(8Wa-31-3)
T41 20 BK/WT
BACK-UP LAMP SWITCH
R
PN
PRNL
P3L
NOL
TRANSMISSION TEMPERATURE SENSOR
TRANSMISSION RANGE SENSOR
EARLY BUILD
NORMAL BUILD

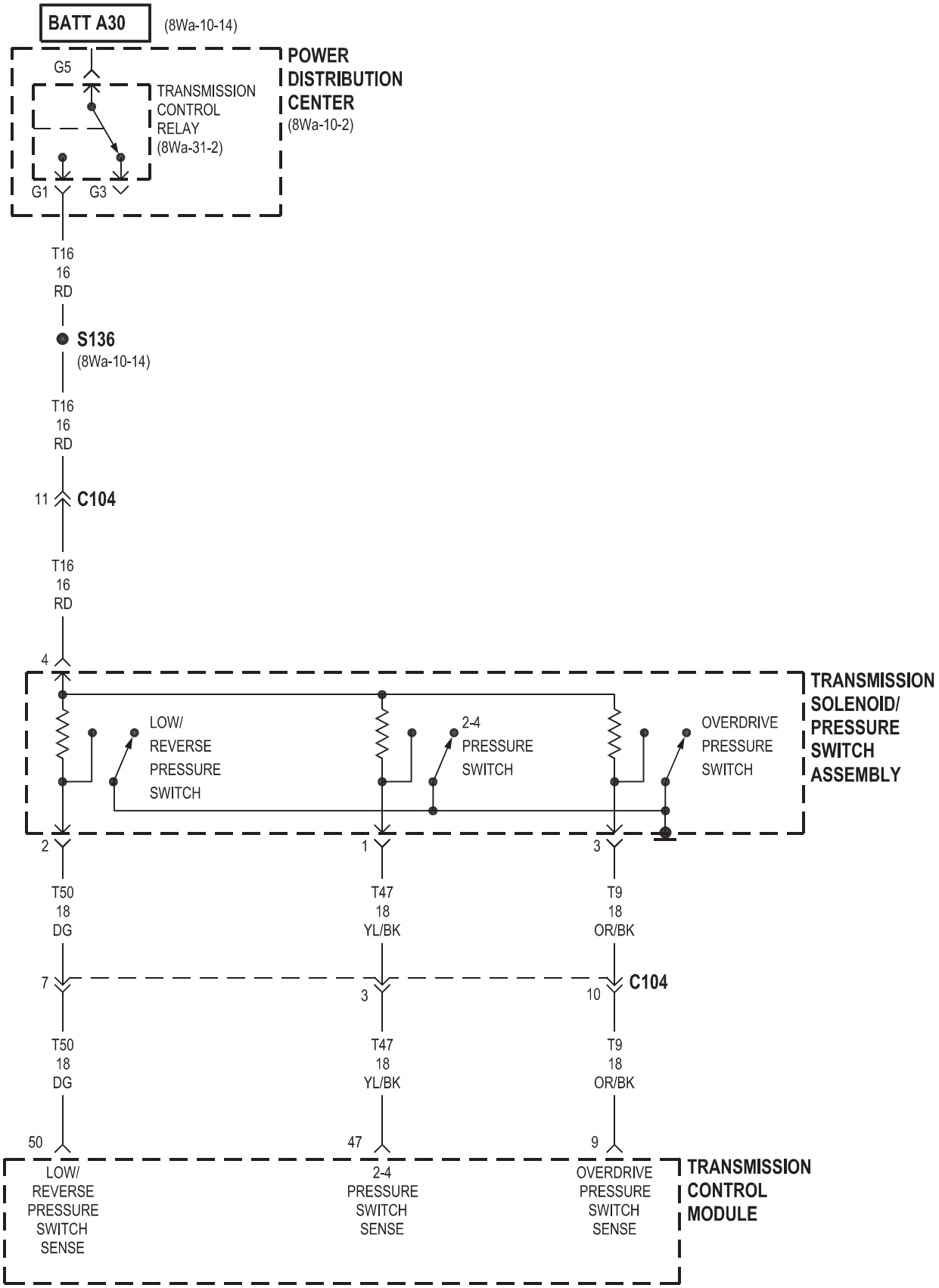
BATT A30
(8Wa-10-14)
G5
TRANSMISSION CONTROL RELAY (8Wa-31-2)
POWER DISTRIBUTION CENTER (8Wa-10-2)
G1
G3
T16 16 RD
S136
(8Wa-10-14)
T16 16 RD
11
C104
T16 16 RD
4
LOW/ REVERSE PRESSURE SWITCH
2-4 PRESSURE SWITCH
OVERDRIVE PRESSURE SWITCH
TRANSMISSION SOLENOID/ PRESSURE SWITCH ASSEMBLY
2
1
3
T50 18 DG
T47 18 YL/BK
T9 18 OR/BK
7
3
10
C104
T50 18 DG
T47 18 YL/BK
T9 18 OR/BK
50
47
9
LOW/ REVERSE PRESSURE SWITCH SENSE
2-4 PRESSURE SWITCH SENSE
OVERDRIVE PRESSURE SWITCH SENSE
TRANSMISSION CONTROL MODULE

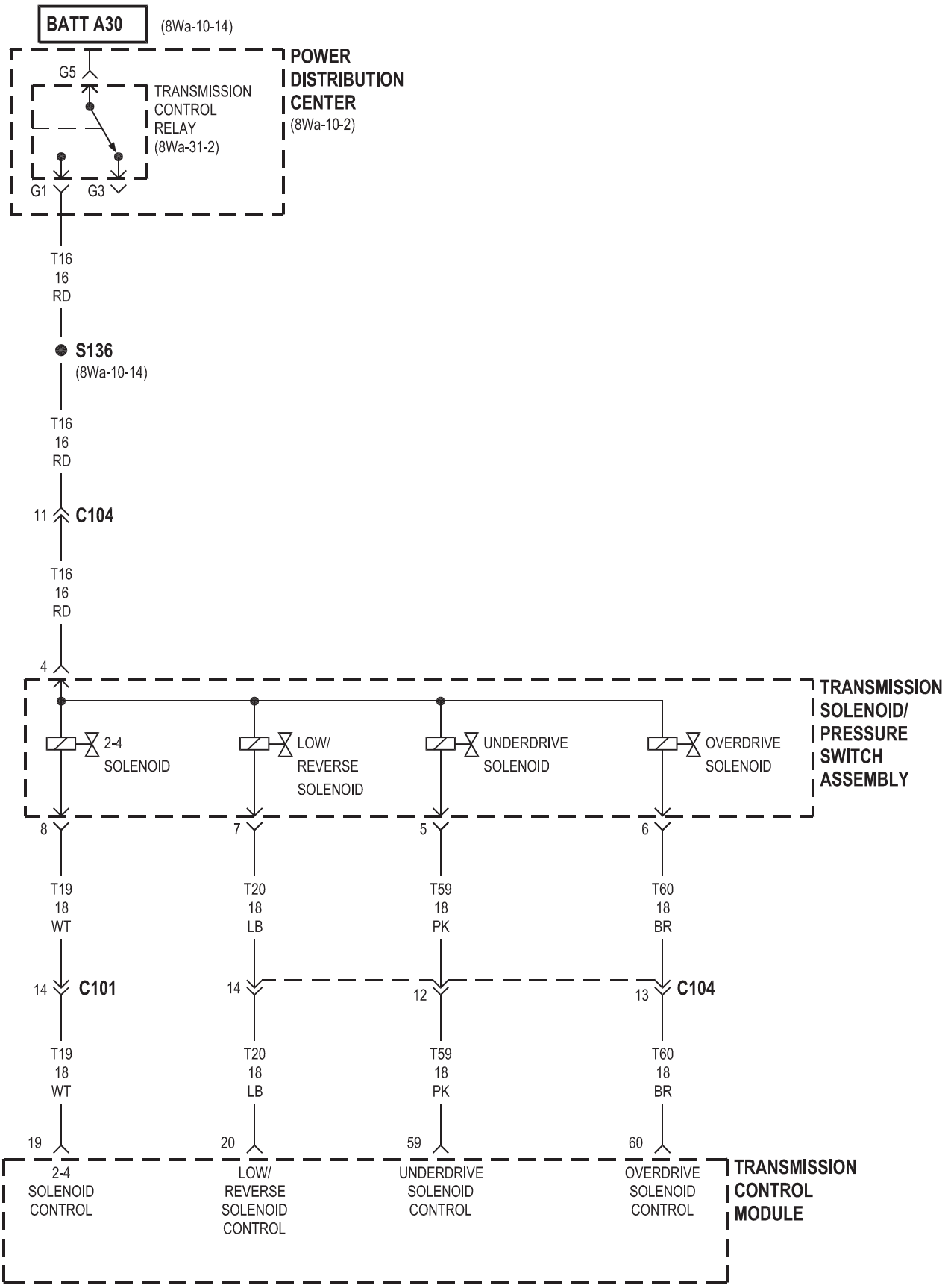
BATT A30
(8Wa-10-14)
POWER DISTRIBUTION CENTER
(8Wa-10-2)
G5
TRANSMISSION CONTROL RELAY
(8Wa-31-2)
G1
G3
T16
16
RD
S136
(8Wa-10-14)
T16
16
RD
11
C104
T16
16
RD
4
TRANSMISSION SOLENOID/ PRESSURE SWITCH ASSEMBLY
2-4 SOLENOID
LOW/ REVERSE SOLENOID
UNDERDRIVE SOLENOID
OVERDRIVE SOLENOID
8
7
5
6
T19
18
WT
T20
18
LB
T59
18
PK
T60
18
BR
14
C101
14
12
13
C104
T19
18
WT
T20
18
LB
T59
18
PK
T60
18
BR
19
20
59
60
2-4 SOLENOID CONTROL
LOW/ REVERSE SOLENOID CONTROL
UNDERDRIVE SOLENOID CONTROL
OVERDRIVE SOLENOID CONTROL
TRANSMISSION CONTROL MODULE

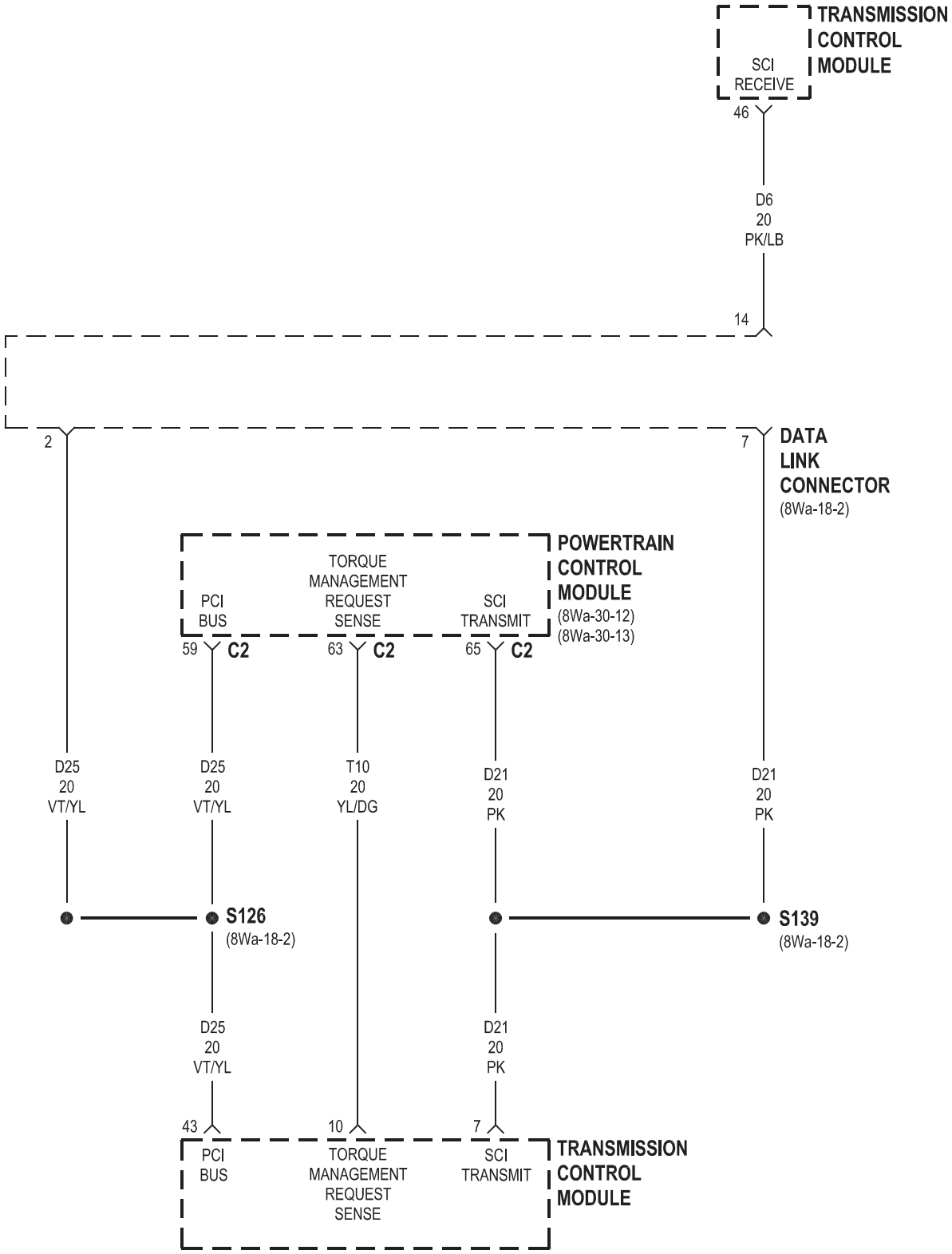
TRANSMISSION CONTROL MODULE
SCI RECEIVE
46
D6
20
PK/LB
14
2
7
DATA LINK CONNECTOR
(8Wa-18-2)
POWERTRAIN CONTROL MODULE
(8Wa-30-12)
(8Wa-30-13)
PCI BUS
TORQUE MANAGEMENT REQUEST SENSE
SCI TRANSMIT
59 C2
63 C2
65 C2
D25
20
VT/YL
D25
20
VT/YL
T10
20
YL/DG
D21
20
PK
D21
20
PK
S126
(8Wa-18-2)
S139
(8Wa-18-2)
D25
20
VT/YL
D21
20
PK
43
10
7
PCI BUS
TORQUE MANAGEMENT REQUEST SENSE
SCI TRANSMIT
TRANSMISSION CONTROL MODULE

8W-33 VEHICLE SPEED CONTROL

Component	Page
Brake Lamp Switch	8Wa-33-3
Clockspring	8Wa-33-3
Clutch Pedal Position Switch	8Wa-33-4, 5
Data Link Connector	8Wa-33-2
Fuse 10 (FB)	8Wa-33-2
Fuse Block	8Wa-33-2
G104	8Wa-33-3
G200	8Wa-33-3
Instrument Cluster	8Wa-33-2
Powertrain Control Module	8Wa-33-2, 3, 4, 5
Speed Control Servo	8Wa-33-3
Transmission Control Module	8Wa-33-4, 5
Transmission Range Sensor	8Wa-33-4, 5
Vehicle Speed Control Switch	8Wa-33-3
Vehicle Speed Sensor	8Wa-33-4, 5

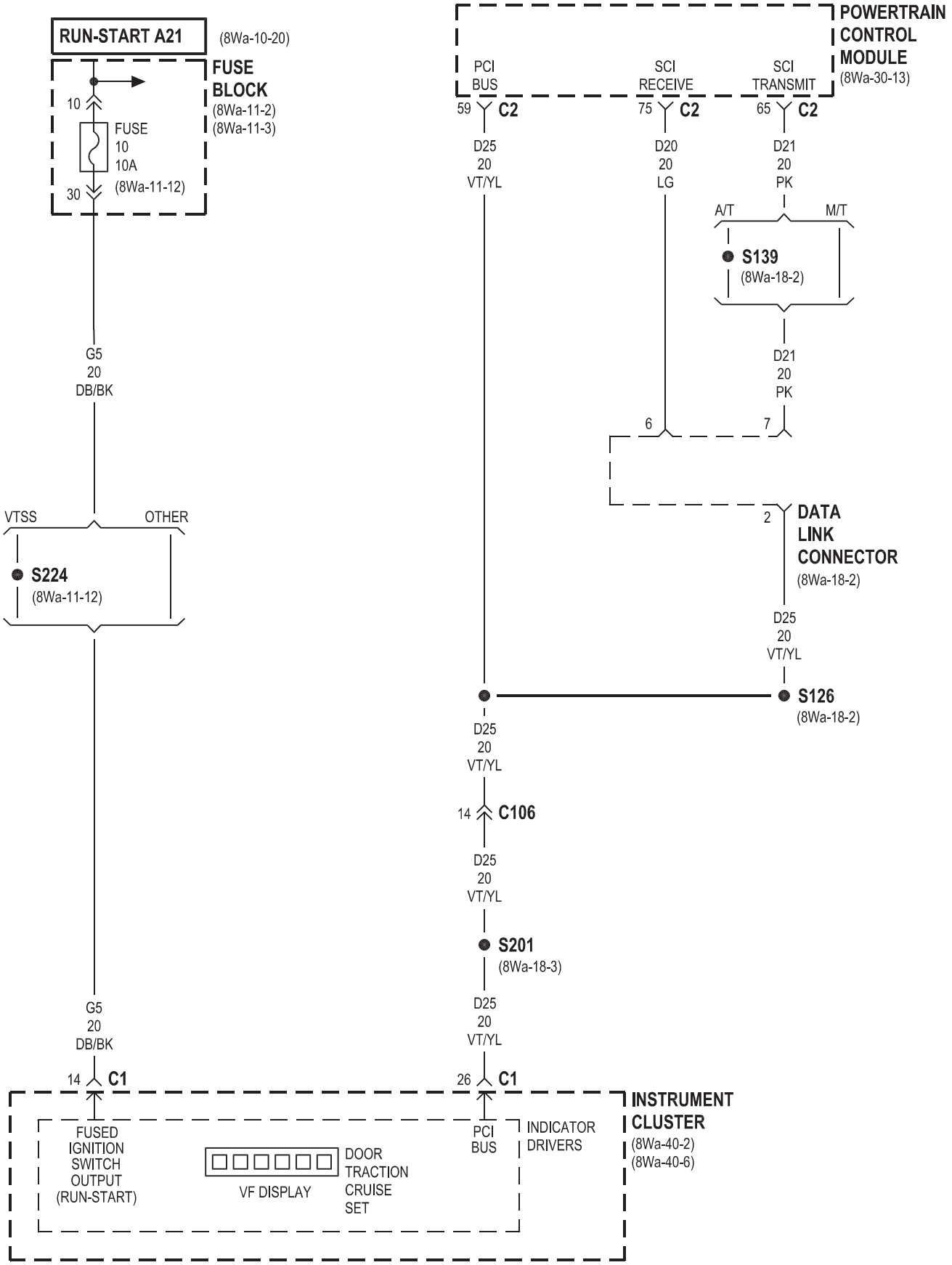
RUN-START A21
(8Wa-10-20)
FUSE BLOCK
(8Wa-11-2)
(8Wa-11-3)
10
FUSE
10
10A
(8Wa-11-12)
30
G5
20
DB/BK
VTSS
OTHER
S224
(8Wa-11-12)
G5
20
DB/BK
14
C1
FUSED IGNITION SWITCH OUTPUT (RUN-START)
VF DISPLAY
DOOR TRACTION CRUISE SET
PCI BUS
INDICATOR DRIVERS
INSTRUMENT CLUSTER
(8Wa-40-2)
(8Wa-40-6)
POWERTRAIN CONTROL MODULE
(8Wa-30-13)
PCI BUS
SCI RECEIVE
SCI TRANSMIT
59
C2
75
C2
65
C2
D25
20
VT/YL
D20
20
LG
D21
20
PK
A/T
M/T
S139
(8Wa-18-2)
D21
20
PK
6
7
2
DATA LINK CONNECTOR
(8Wa-18-2)
D25
20
VT/YL
S126
(8Wa-18-2)
D25
20
VT/YL
14
C106
D25
20
VT/YL
S201
(8Wa-18-3)
D25
20
VT/YL
26
C1

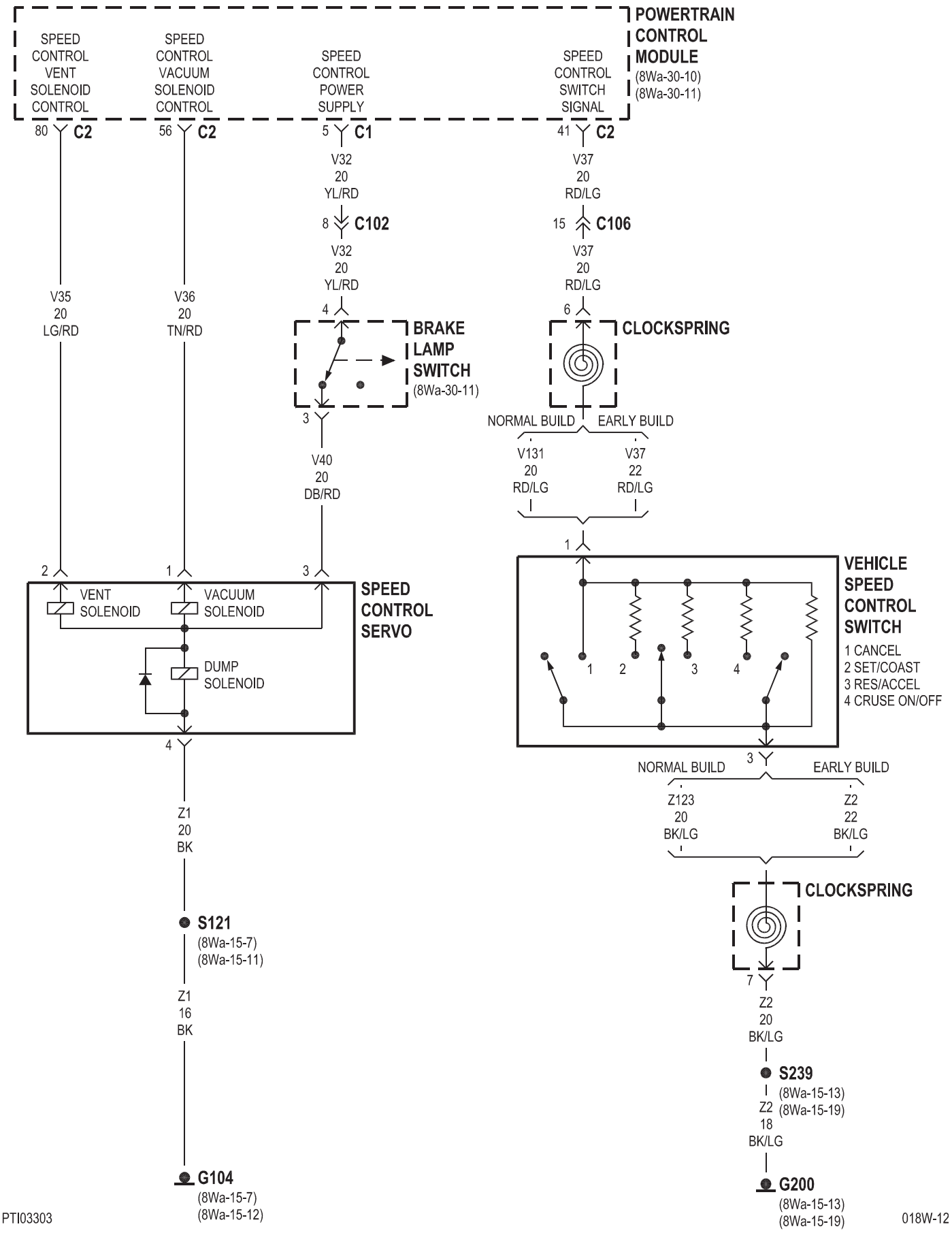

PTI03303

018W-12

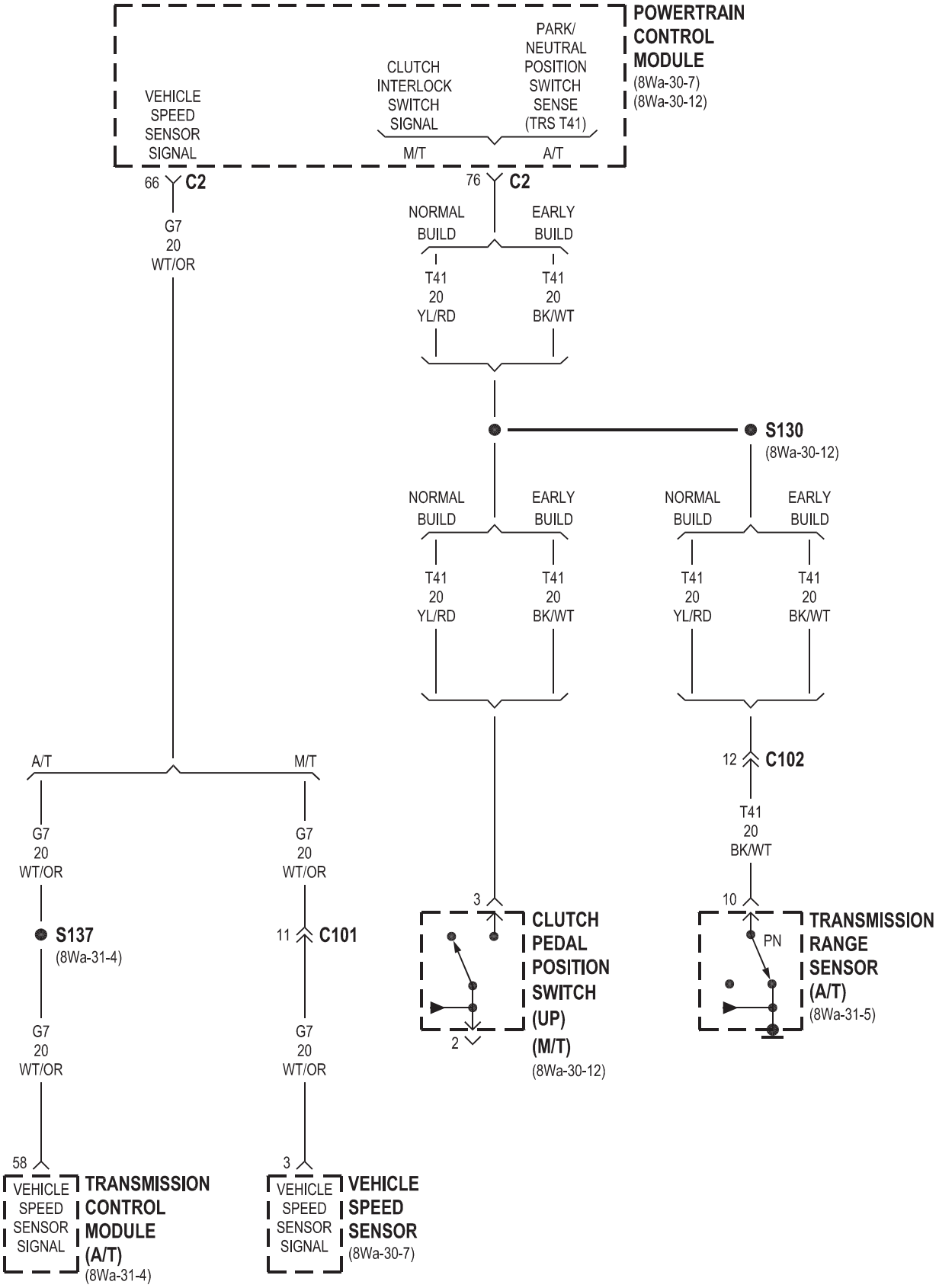
POWERTRAIN CONTROL MODULE
(8Wa-30-7)
(8Wa-30-12)
VEHICLE SPEED SENSOR SIGNAL
CLUTCH INTERLOCK SWITCH SIGNAL
PARK/ NEUTRAL POSITION SWITCH SENSE (TRS T41)
M/T
A/T
66 C2
76 C2
G7 20 WT/OR
NORMAL BUILD
EARLY BUILD
T41 20 YL/RD
T41 20 BK/WT
S130
(8Wa-30-12)
A/T
M/T
12 C102
T41 20 BK/WT
S137
(8Wa-31-4)
11 C101
3
10
CLUTCH PEDAL POSITION SWITCH (UP) (M/T)
(8Wa-30-12)
PN
TRANSMISSION RANGE SENSOR (A/T)
(8Wa-31-5)
2
58
3
VEHICLE SPEED SENSOR SIGNAL
TRANSMISSION CONTROL MODULE (A/T)
(8Wa-31-4)
VEHICLE SPEED SENSOR
(8Wa-30-7)

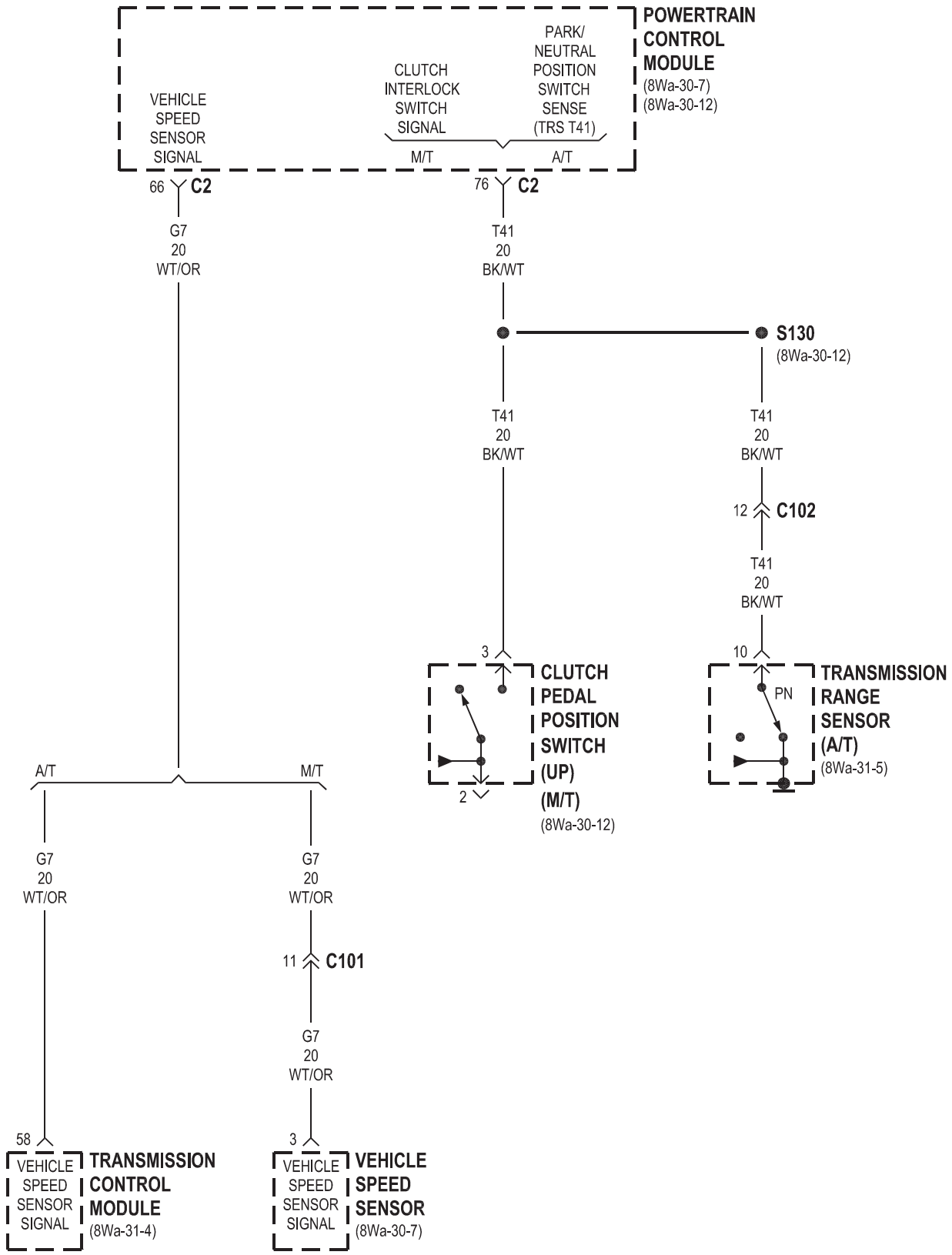
POWERTRAIN CONTROL MODULE
(8Wa-30-7)
(8Wa-30-12)
VEHICLE SPEED SENSOR SIGNAL
CLUTCH INTERLOCK SWITCH SIGNAL
PARK/ NEUTRAL POSITION SWITCH SENSE (TRS T41)
M/T
A/T
66
C2
76
C2
G7
20
WT/OR
T41
20
BK/WT
S130
(8Wa-30-12)
T41
20
BK/WT
T41
20
BK/WT
12
C102
T41
20
BK/WT
3
CLUTCH PEDAL POSITION SWITCH (UP) (M/T)
(8Wa-30-12)
2
10
PN
TRANSMISSION RANGE SENSOR (A/T)
(8Wa-31-5)
A/T
M/T
G7
20
WT/OR
G7
20
WT/OR
11
C101
G7
20
WT/OR
58
VEHICLE SPEED SENSOR SIGNAL
TRANSMISSION CONTROL MODULE
(8Wa-31-4)
3
VEHICLE SPEED SENSOR SIGNAL
VEHICLE SPEED SENSOR
(8Wa-30-7)

2001 PT CRUISER

8W-35 ANTILOCK BRAKES

Component	Page
Brake Lamp Switch	8Wa-35-2
Controller Antilock Brake	8Wa-35-2, 3, 4
Data Link Connector	8Wa-35-2
Fuse 2 (PDC)	8Wa-35-2
Fuse 7 (PDC)	8Wa-35-2
Fuse 11 (FB)	8Wa-35-3
Fuse 12 (PDC)	8Wa-35-2
Fuse Block	8Wa-35-3
G103	8Wa-35-2
G201	8Wa-35-3
Instrument Cluster	8Wa-35-3
Left Front Wheel Speed Sensor	8Wa-35-4
Left Rear Wheel Speed Sensor	8Wa-35-4
Power Distribution Center	8Wa-35-2
Right Front Wheel Speed Sensor	8Wa-35-4
Right Rear Wheel Speed Sensor	8Wa-35-4
Traction Control Switch	8Wa-35-3

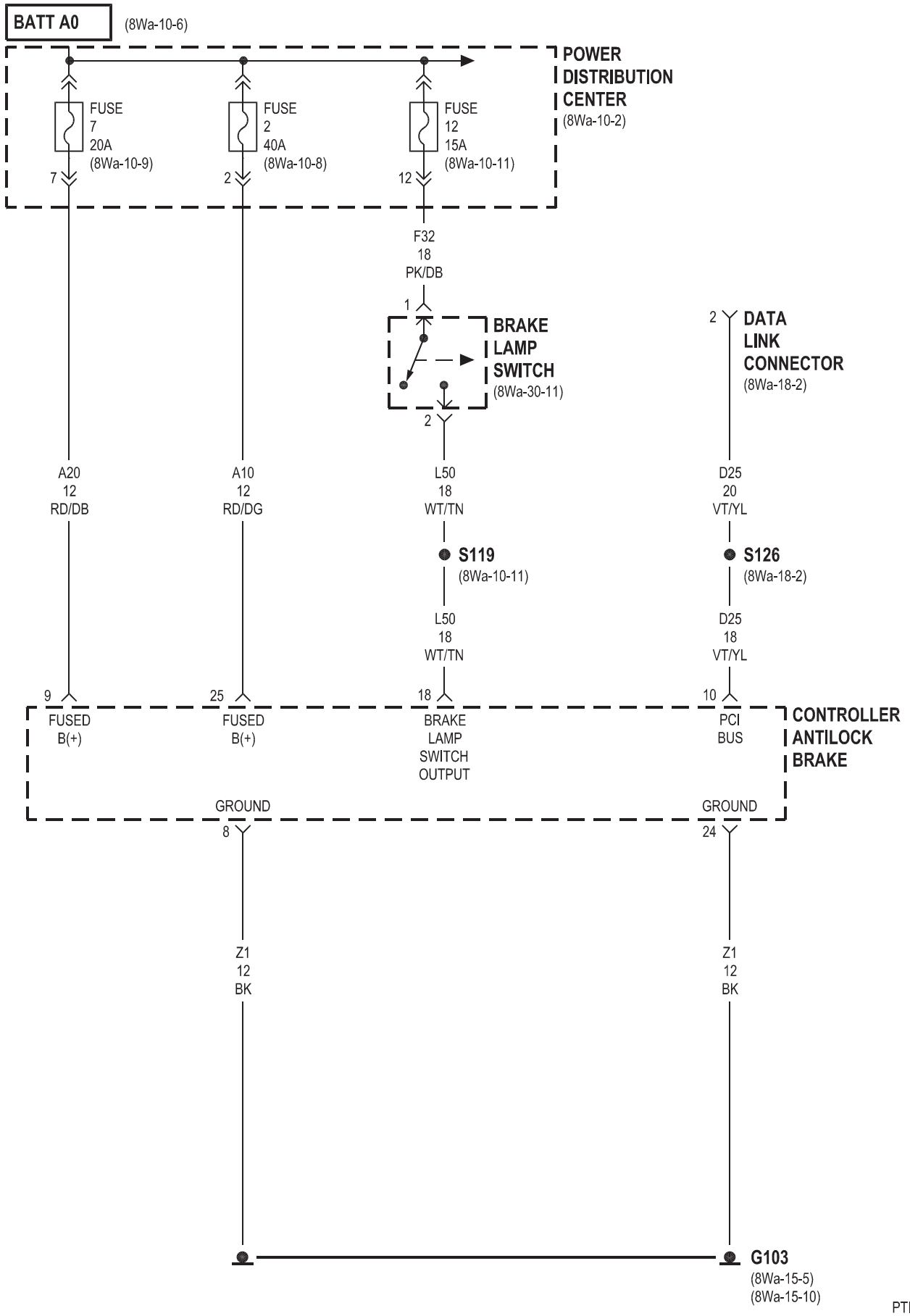
BATT A0
(8Wa-10-6)
POWER DISTRIBUTION CENTER
(8Wa-10-2)
FUSE 7 20A
(8Wa-10-9)
FUSE 2 40A
(8Wa-10-8)
FUSE 12 15A
(8Wa-10-11)
7
2
12
F32 18 PK/DB
1
BRAKE LAMP SWITCH
(8Wa-30-11)
2
2
DATA LINK CONNECTOR
(8Wa-18-2)
A20 12 RD/DB
A10 12 RD/DG
L50 18 WT/TN
D25 20 VT/YL
S119
(8Wa-10-11)
S126
(8Wa-18-2)
L50 18 WT/TN
D25 18 VT/YL
9
25
18
10
FUSED B(+)
FUSED B(+)
BRAKE LAMP SWITCH OUTPUT
PCI BUS
CONTROLLER ANTILOCK BRAKE
GROUND
GROUND
8
24
Z1 12 BK
Z1 12 BK
G103
(8Wa-15-5)
(8Wa-15-10)

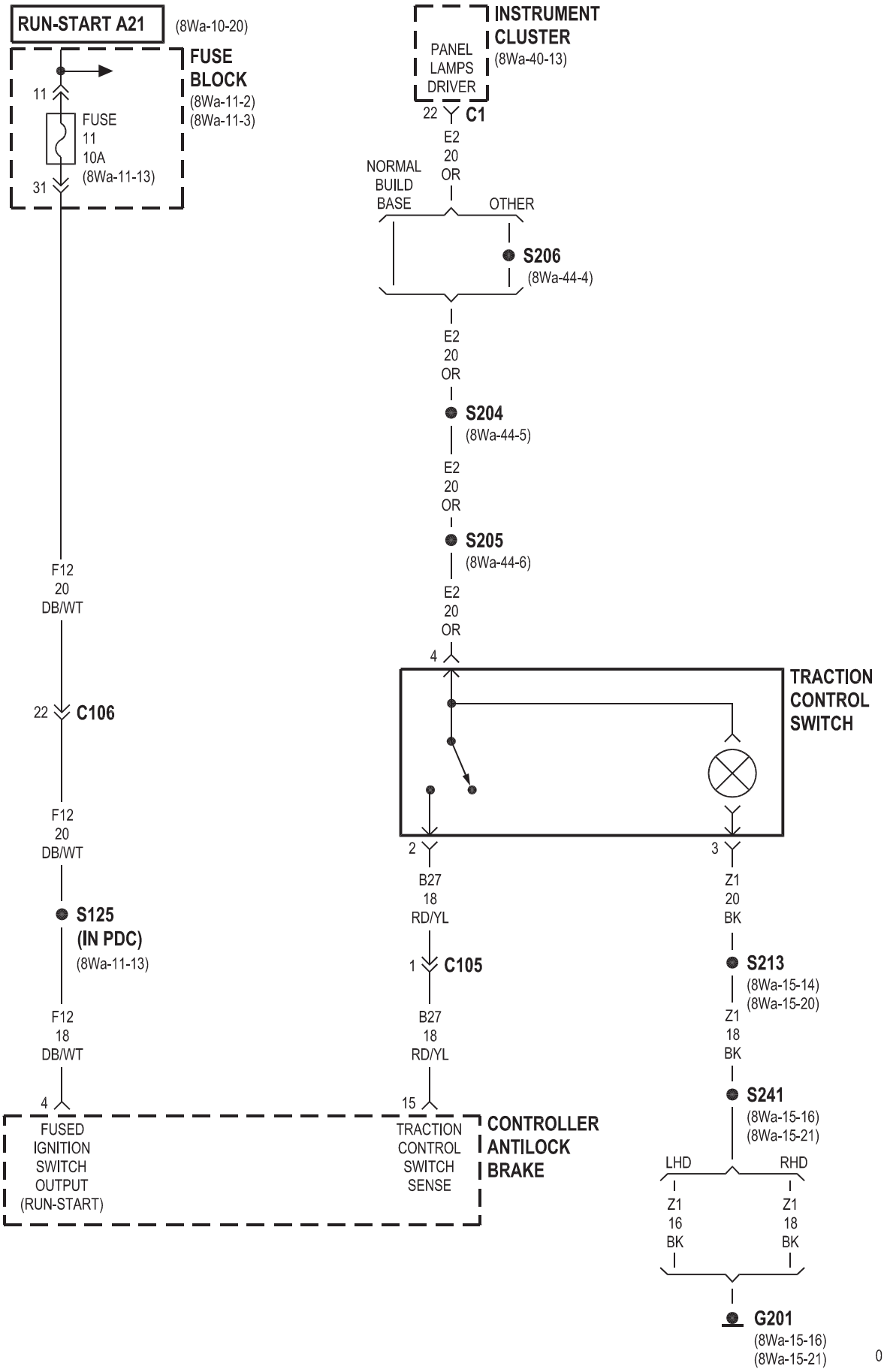
RUN-START A21
(8Wa-10-20)
FUSE BLOCK
(8Wa-11-2)
(8Wa-11-3)
11
FUSE
11
10A
(8Wa-11-13)
31
INSTRUMENT CLUSTER
(8Wa-40-13)
PANEL LAMPS DRIVER
22
C1
E2
20
OR
NORMAL BUILD BASE
OTHER
S206
(8Wa-44-4)
E2
20
OR
S204
(8Wa-44-5)
E2
20
OR
S205
(8Wa-44-6)
E2
20
OR
4
TRACTION CONTROL SWITCH
F12
20
DB/WT
22
C106
F12
20
DB/WT
S125
(IN PDC)
(8Wa-11-13)
F12
18
DB/WT
4
2
B27
18
RD/YL
1
C105
B27
18
RD/YL
15
3
Z1
20
BK
S213
(8Wa-15-14)
(8Wa-15-20)
Z1
18
BK
S241
(8Wa-15-16)
(8Wa-15-21)
LHD
RHD
Z1
16
BK
Z1
18
BK
G201
(8Wa-15-16)
(8Wa-15-21)
FUSED IGNITION SWITCH OUTPUT (RUN-START)
TRACTION CONTROL SWITCH SENSE
CONTROLLER ANTILOCK BRAKE

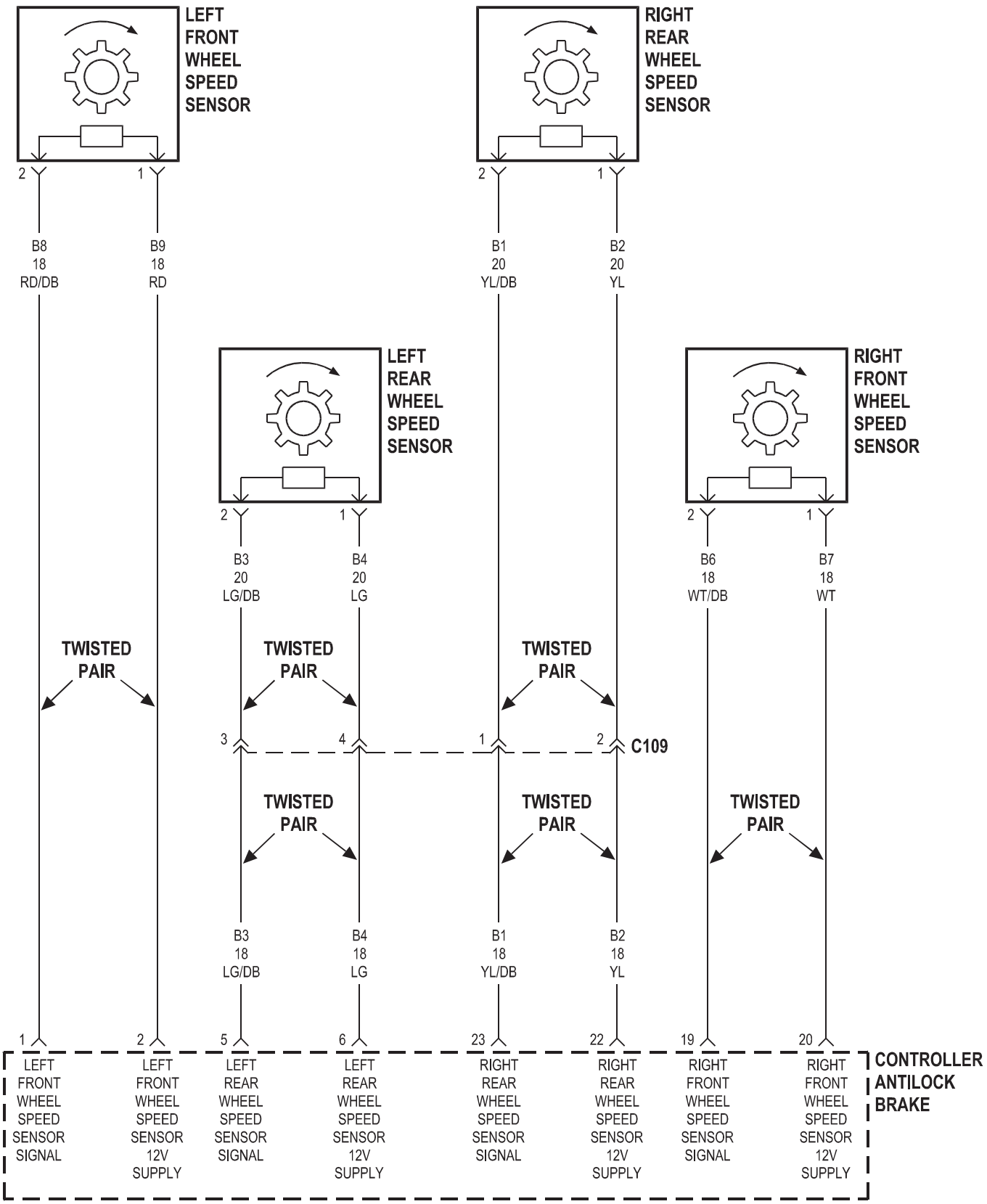
LEFT FRONT WHEEL SPEED SENSOR
RIGHT REAR WHEEL SPEED SENSOR
LEFT REAR WHEEL SPEED SENSOR
RIGHT FRONT WHEEL SPEED SENSOR
2
1
B8 18 RD/DB
B9 18 RD
B1 20 YL/DB
B2 20 YL
B3 20 LG/DB
B4 20 LG
B6 18 WT/DB
B7 18 WT
TWISTED PAIR
3
4
1
2
C109
B3 18 LG/DB
B4 18 LG
B1 18 YL/DB
B2 18 YL
1
2
5
6
23
22
19
20
LEFT FRONT WHEEL SPEED SENSOR SIGNAL
LEFT FRONT WHEEL SPEED SENSOR 12V SUPPLY
LEFT REAR WHEEL SPEED SENSOR SIGNAL
LEFT REAR WHEEL SPEED SENSOR 12V SUPPLY
RIGHT REAR WHEEL SPEED SENSOR SIGNAL
RIGHT REAR WHEEL SPEED SENSOR 12V SUPPLY
RIGHT FRONT WHEEL SPEED SENSOR SIGNAL
RIGHT FRONT WHEEL SPEED SENSOR 12V SUPPLY
CONTROLLER ANTILOCK BRAKE

8W-39 VEHICLE THEFT SECURITY SYSTEM

Component	Page
Data Link Connector	8Wa-39-3, 16
Dome Lamp/Intrusion Sensor	8Wa-39-18
Driver Cylinder Lock Switch	8Wa-39-9, 10
Driver Door Lock Motor	8Wa-39-13
Driver Door Lock Switch	8Wa-39-9, 10, 14
Driver Door Power Lock Motor/Ajar Switch	8Wa-39-4, 6, 14
Fuse 1 (FB)	8Wa-39-2
Fuse 3 (FB)	8Wa-39-2
Fuse 10 (FB)	8Wa-39-2, 3
Fuse 14 (PDC)	8Wa-39-16
Fuse 18 (PDC)	8Wa-39-3, 18
Fuse 19 (FB)	8Wa-39-17
Fuse 20 (FB)	8Wa-39-17
Fuse Block	8Wa-39-2, 3, 17
G102	8Wa-39-8
G103	8Wa-39-15, 18
G104	8Wa-39-15, 16
G200	8Wa-39-2, 3, 18
G201	8Wa-39-2
G300	8Wa-39-8
Headlamp Leveling Switch	8Wa-39-15
Headlamp Switch	8Wa-39-14
High Note Horn	8Wa-39-16
Hood Ajar Switch	8Wa-39-8
Horn Relay	8Wa-39-16
Instrument Cluster	8Wa-39-4, 5, 6, 7, 14, 17
Left Front Door Ajar Switch	8Wa-39-4, 5, 6, 7
Left Front Park/Turn Signal Lamp	8Wa-39-15
Left Lavalier Module	8Wa-39-15, 17
Left Low Beam Headlamp	8Wa-39-17
Left Rear Door Ajar Switch	8Wa-39-4, 5, 6, 7
Left Rear Door Power Lock Motor	8Wa-39-11, 12
Left Rear Turn Signal Lamp	8Wa-39-17
Liftgate Ajar Switch	8Wa-39-8
Liftgate Cylinder Lock Switch	8Wa-39-9, 10
Liftgate Power Lock Motor	8Wa-39-11, 12
Low Note Horn	8Wa-39-16
Multi- Function Switch	8Wa-39-15, 17
Passenger Cylinder Lock Switch	8Wa-39-9, 10
Passenger Door Lock Motor	8Wa-39-13
Passenger Door Lock Switch	8Wa-39-9, 10, 14
Passenger Door Power Lock Motor/Ajar Switch	8Wa-39-4, 6, 13
Power Distribution Center	8Wa-39-3, 16, 18
Remote Keyless Entry Antenna	8Wa-39-18
Remote Keyless Entry Module	8Wa-39-2, 4, 5, 6, 7, 8, 9, 10, 11, 12, 13, 14, 15, 16, 17, 18
Right Front Door Ajar Switch	8Wa-39-4, 5, 6, 7
Right Front Park/Turn Signal Lamp	8Wa-39-15
Right Lavalier Module	8Wa-39-15, 17
Right Low Beam Headlamp	8Wa-39-17
Right Rear Door Ajar Switch	8Wa-39-4, 5, 6, 7
Right Rear Door Power Lock Motor	8Wa-39-11, 12
Right Rear Turn Signal Lamp	8Wa-39-15
Sentry Key Immobilizer Module	8Wa-39-3
Siren	8Wa-39-18

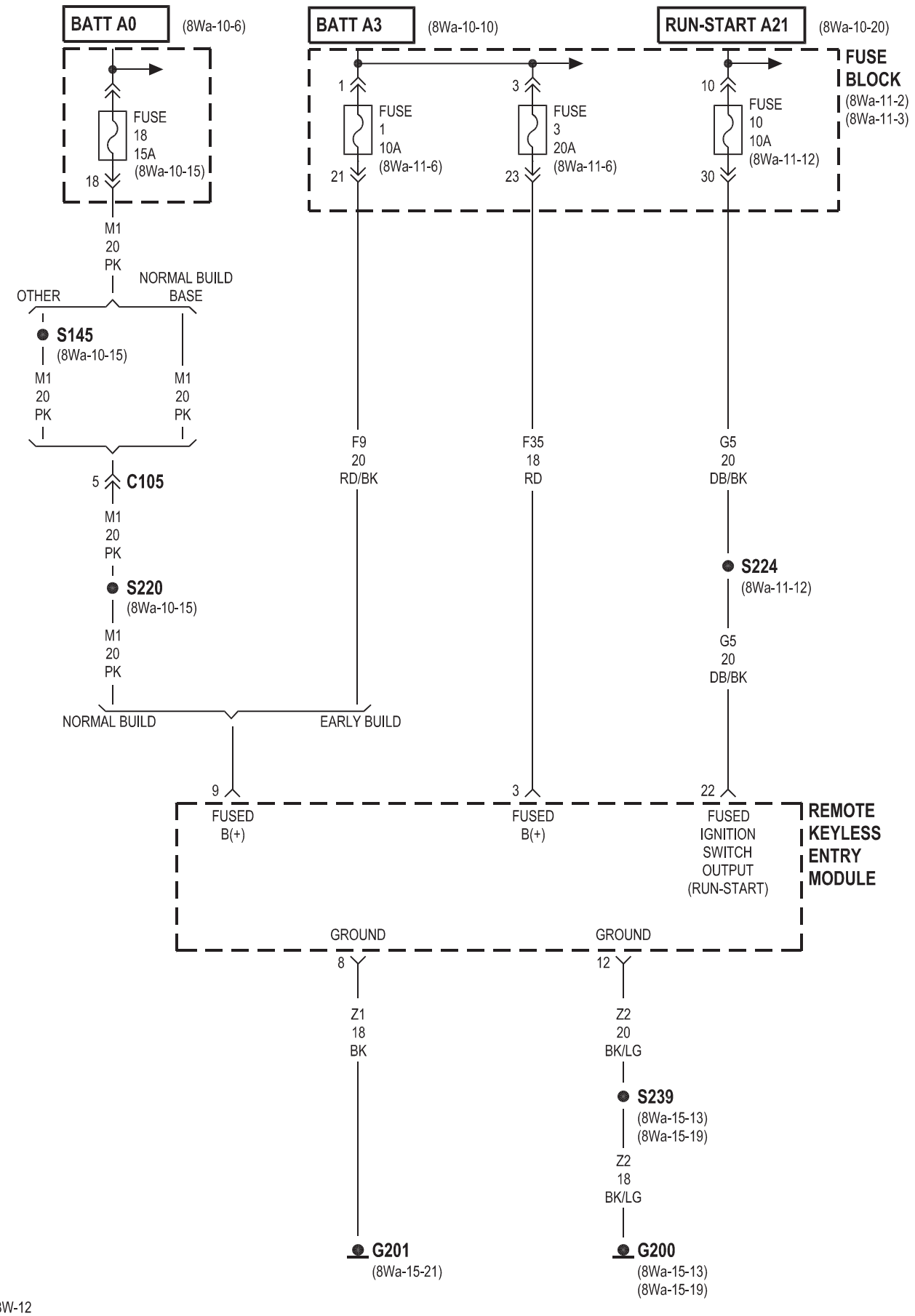
BATT A0
(8Wa-10-6)
BATT A3
(8Wa-10-10)
RUN-START A21
(8Wa-10-20)
FUSE BLOCK
(8Wa-11-2)
(8Wa-11-3)
FUSE 18 15A (8Wa-10-15)
FUSE 1 10A (8Wa-11-6)
FUSE 3 20A (8Wa-11-6)
FUSE 10 10A (8Wa-11-12)
M1 20 PK
OTHER
NORMAL BUILD BASE
S145
(8Wa-10-15)
C105
S220
(8Wa-10-15)
F9 20 RD/BK
F35 18 RD
G5 20 DB/BK
S224
(8Wa-11-12)
NORMAL BUILD
EARLY BUILD
FUSED B(+)
FUSED IGNITION SWITCH OUTPUT (RUN-START)
REMOTE KEYLESS ENTRY MODULE
GROUND
Z1 18 BK
Z2 20 BK/LG
S239
(8Wa-15-13)
(8Wa-15-19)
Z2 18 BK/LG
G201
(8Wa-15-21)
G200
(8Wa-15-13)
(8Wa-15-19)

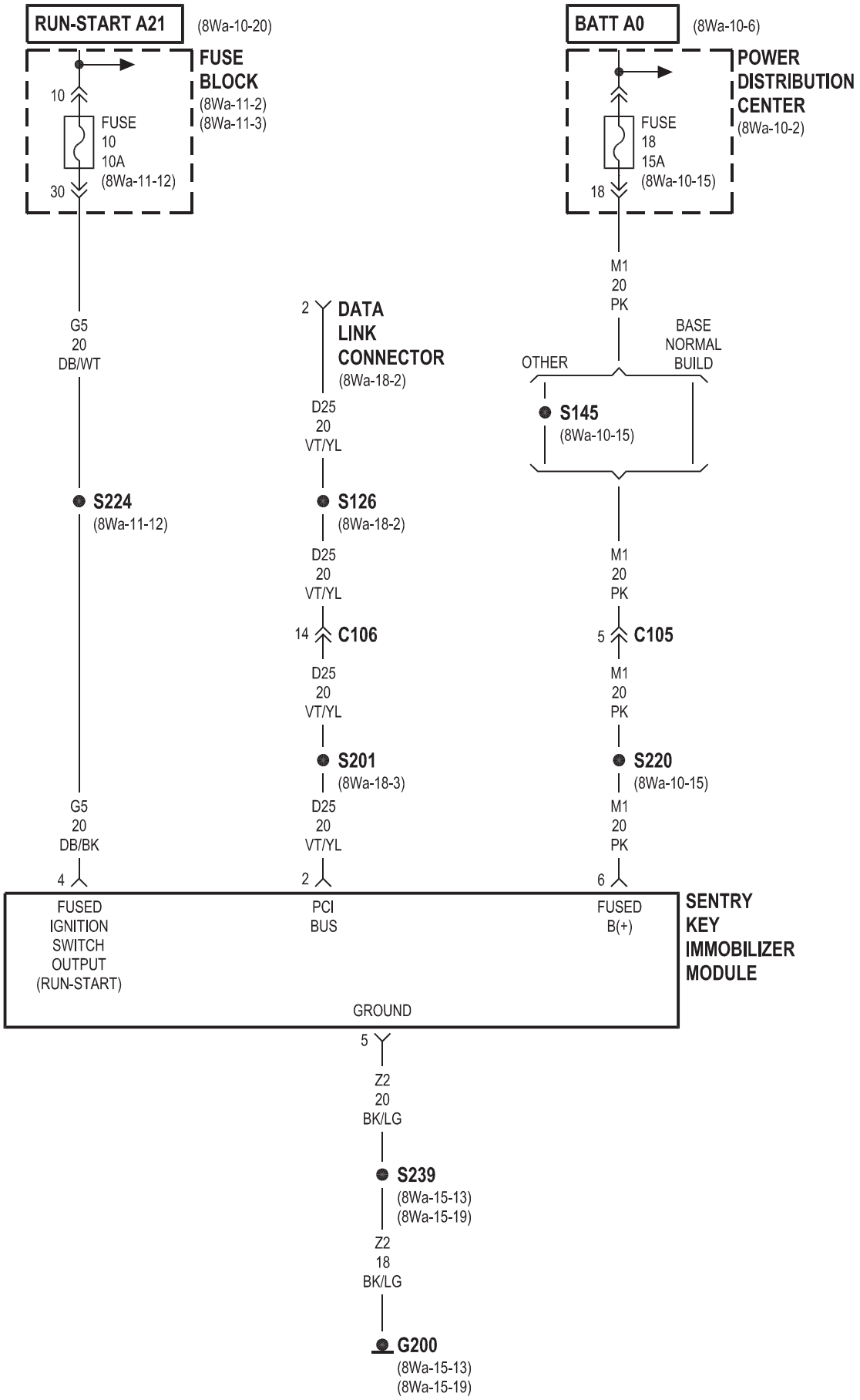
RUN-START A21
(8Wa-10-20)
FUSE BLOCK
(8Wa-11-2)
(8Wa-11-3)
10
FUSE 10 10A
(8Wa-11-12)
30
G5 20 DB/WT
S224
(8Wa-11-12)
G5 20 DB/BK
4
FUSED IGNITION SWITCH OUTPUT (RUN-START)
2
DATA LINK CONNECTOR
(8Wa-18-2)
D25 20 VT/YL
S126
(8Wa-18-2)
D25 20 VT/YL
14
C106
D25 20 VT/YL
S201
(8Wa-18-3)
D25 20 VT/YL
2
PCI BUS
BATT A0
(8Wa-10-6)
POWER DISTRIBUTION CENTER
(8Wa-10-2)
FUSE 18 15A
(8Wa-10-15)
18
M1 20 PK
OTHER
BASE NORMAL BUILD
S145
(8Wa-10-15)
M1 20 PK
5
C105
M1 20 PK
S220
(8Wa-10-15)
M1 20 PK
6
FUSED B(+)
SENTRY KEY IMMOBILIZER MODULE
GROUND
5
Z2 20 BK/LG
S239
(8Wa-15-13)
(8Wa-15-19)
Z2 18 BK/LG
G200
(8Wa-15-13)
(8Wa-15-19)

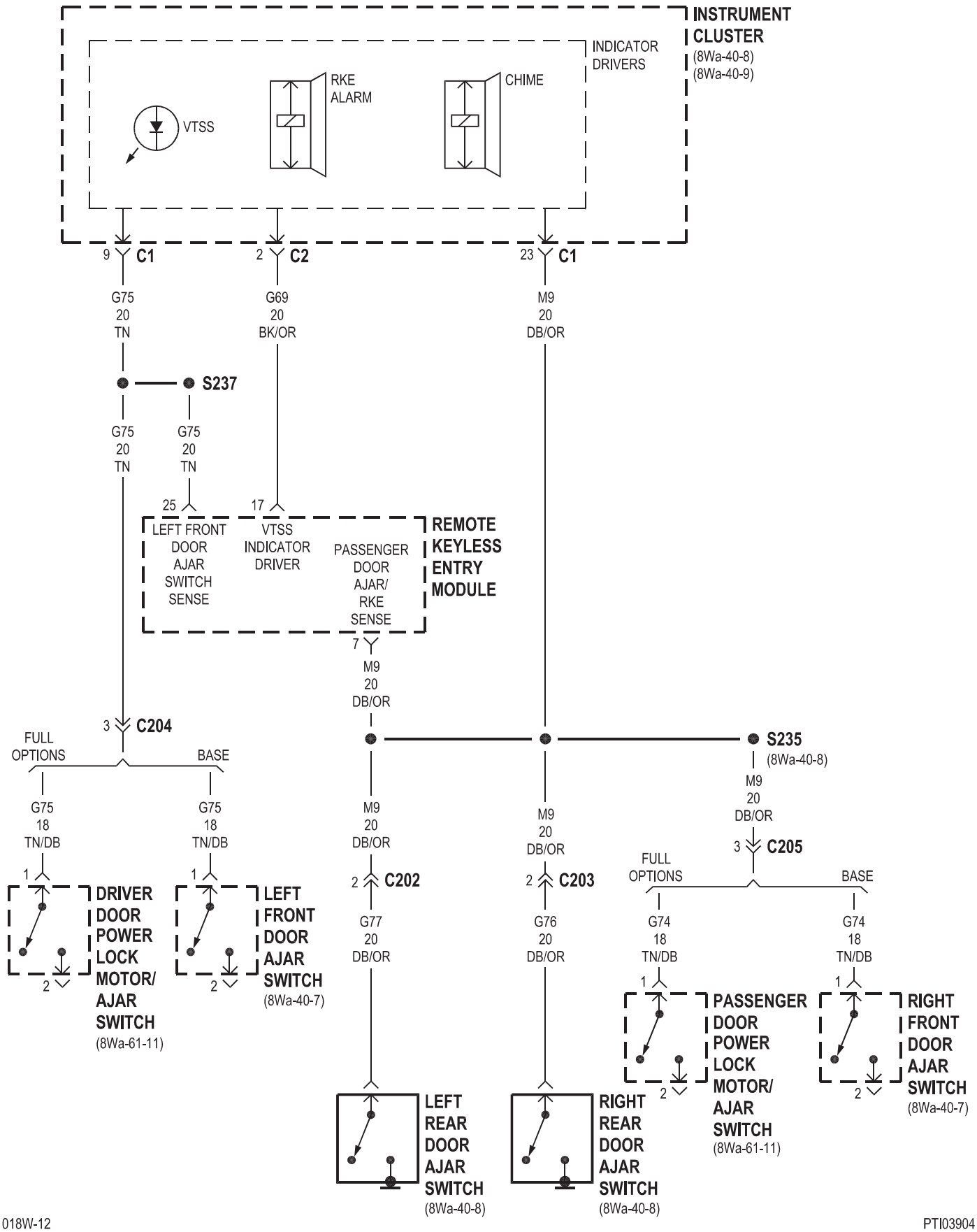
INSTRUMENT CLUSTER
(8Wa-40-8)
(8Wa-40-9)
INDICATOR DRIVERS
VTSS
RKE ALARM
CHIME
9 C1
2 C2
23 C1
G75 20 TN
G69 20 BK/OR
M9 20 DB/OR
S237
G75 20 TN
G75 20 TN
25
17
LEFT FRONT DOOR AJAR SWITCH SENSE
VTSS INDICATOR DRIVER
PASSENGER DOOR AJAR/ RKE SENSE
REMOTE KEYLESS ENTRY MODULE
7
M9 20 DB/OR
3 C204
FULL OPTIONS
BASE
S235
(8Wa-40-8)
G75 18 TN/DB
G75 18 TN/DB
M9 20 DB/OR
M9 20 DB/OR
M9 20 DB/OR
3 C205
1
1
2 C202
2 C203
FULL OPTIONS
BASE
DRIVER DOOR POWER LOCK MOTOR/ AJAR SWITCH
(8Wa-61-11)
LEFT FRONT DOOR AJAR SWITCH
(8Wa-40-7)
G77 20 DB/OR
G76 20 DB/OR
G74 18 TN/DB
G74 18 TN/DB
PASSENGER DOOR POWER LOCK MOTOR/ AJAR SWITCH
(8Wa-61-11)
RIGHT FRONT DOOR AJAR SWITCH
(8Wa-40-7)
LEFT REAR DOOR AJAR SWITCH
(8Wa-40-8)
RIGHT REAR DOOR AJAR SWITCH
(8Wa-40-8)

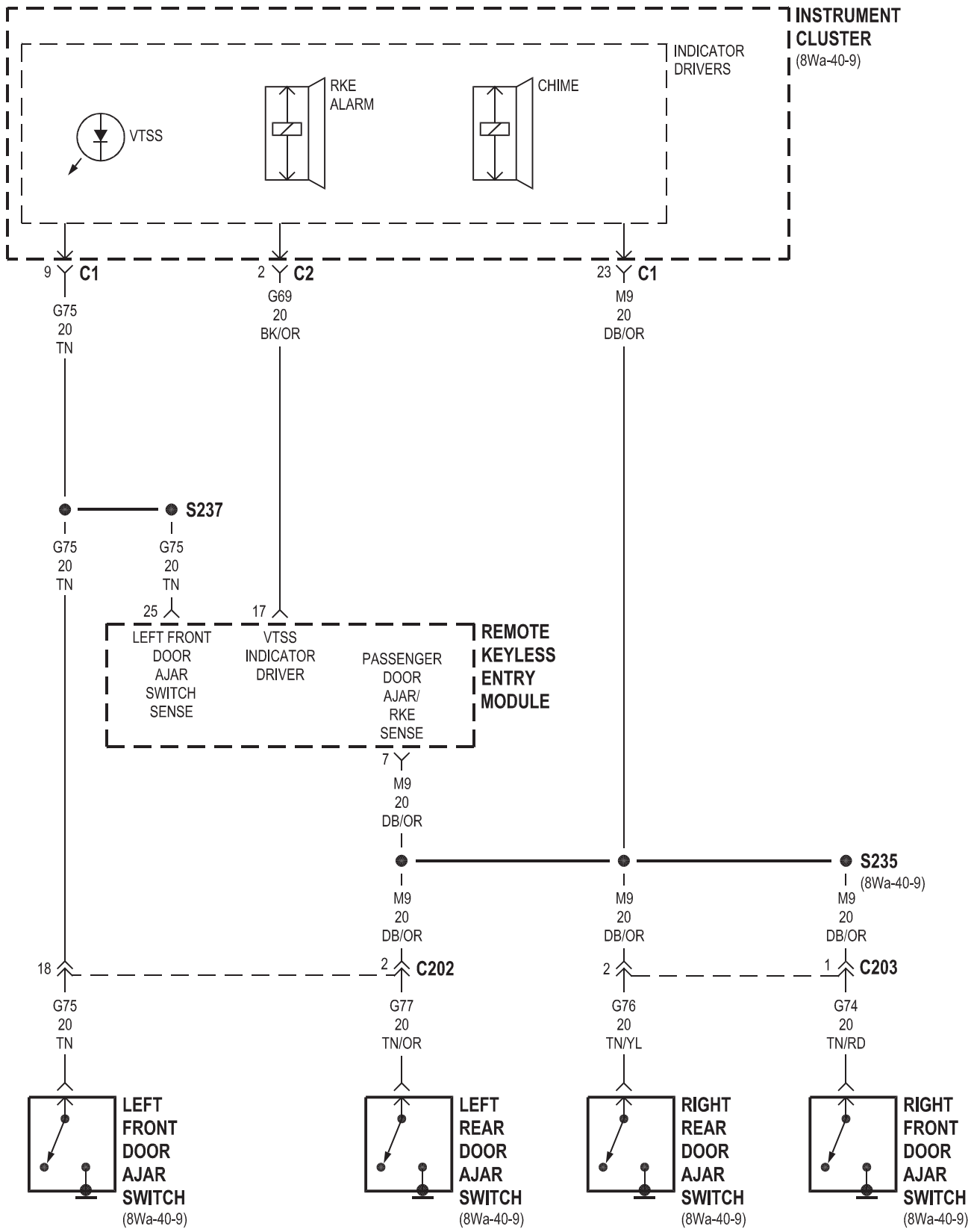
INSTRUMENT CLUSTER
(8Wa-40-9)
INDICATOR DRIVERS
VTSS
RKE ALARM
CHIME
9 C1
2 C2
23 C1
G75 20 TN
G69 20 BK/OR
M9 20 DB/OR
S237
G75 20 TN
G75 20 TN
25
17
LEFT FRONT DOOR AJAR SWITCH SENSE
VTSS INDICATOR DRIVER
PASSENGER DOOR AJAR/ RKE SENSE
REMOTE KEYLESS ENTRY MODULE
7
M9 20 DB/OR
S235
(8Wa-40-9)
M9 20 DB/OR
M9 20 DB/OR
M9 20 DB/OR
18
2 C202
2
1 C203
G75 20 TN
G77 20 TN/OR
G76 20 TN/YL
G74 20 TN/RD
LEFT FRONT DOOR AJAR SWITCH
(8Wa-40-9)
LEFT REAR DOOR AJAR SWITCH
(8Wa-40-9)
RIGHT REAR DOOR AJAR SWITCH
(8Wa-40-9)
RIGHT FRONT DOOR AJAR SWITCH
(8Wa-40-9)

RHD NORMAL BUILD

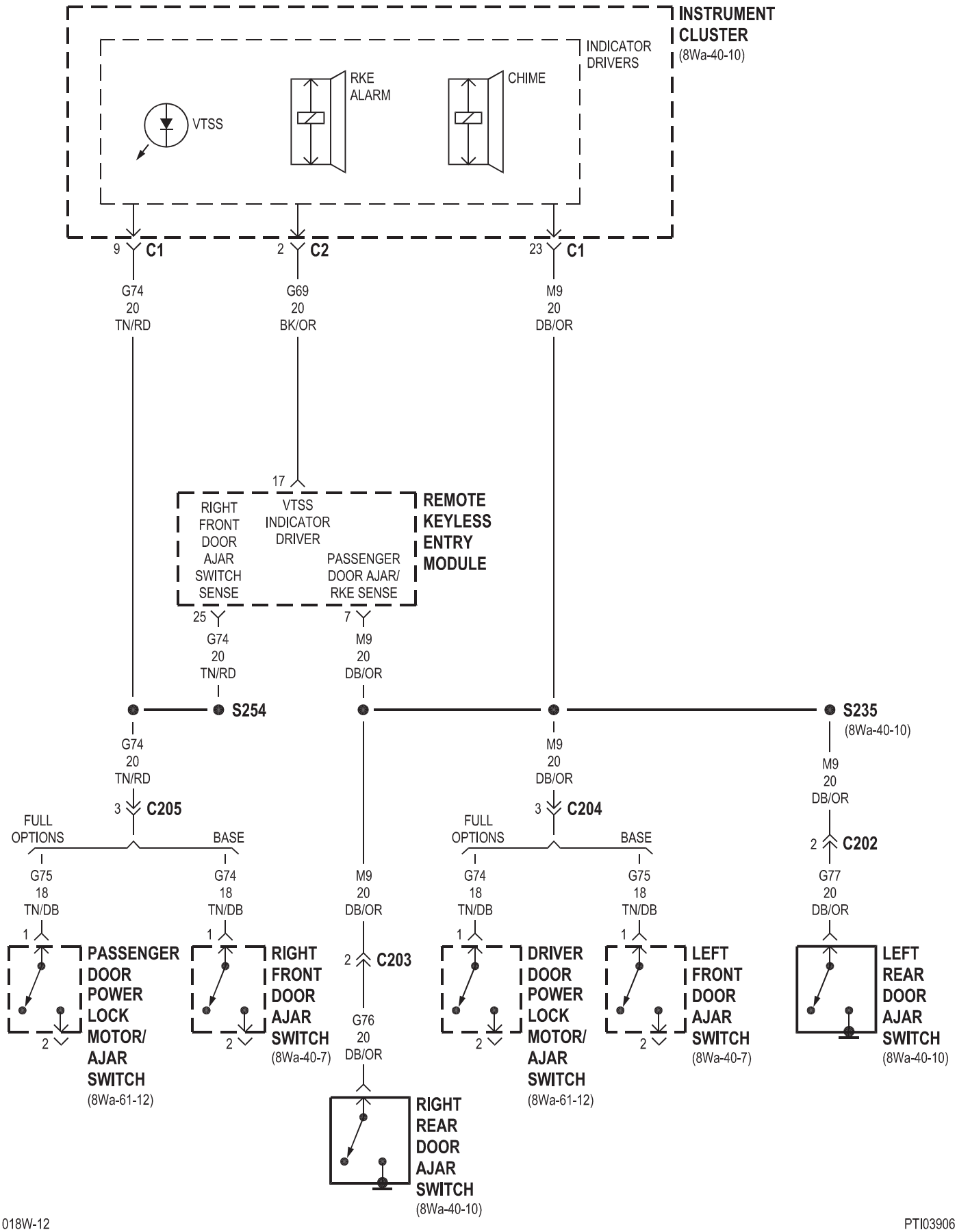

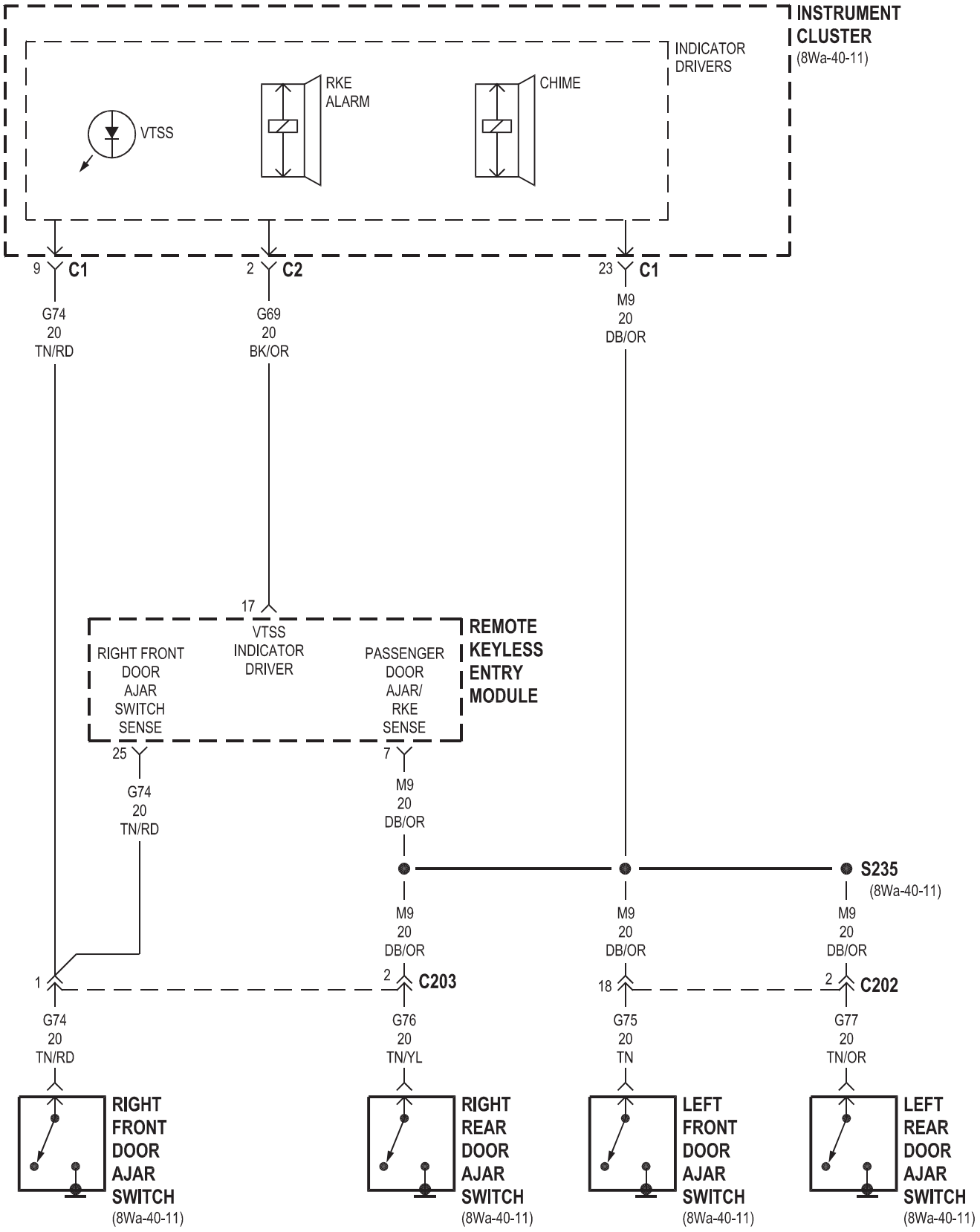
INSTRUMENT CLUSTER
(8Wa-40-11)
INDICATOR DRIVERS
VTSS
RKE ALARM
CHIME
9 C1
2 C2
23 C1
G74
20
TN/RD
G69
20
BK/OR
M9
20
DB/OR
17
VTSS INDICATOR DRIVER
RIGHT FRONT DOOR AJAR SWITCH SENSE
PASSENGER DOOR AJAR/ RKE SENSE
REMOTE KEYLESS ENTRY MODULE
25
7
G74
20
TN/RD
M9
20
DB/OR
S235
(8Wa-40-11)
M9
20
DB/OR
M9
20
DB/OR
M9
20
DB/OR
1
2 C203
18
2 C202
G74
20
TN/RD
G76
20
TN/YL
G75
20
TN
G77
20
TN/OR
RIGHT FRONT DOOR AJAR SWITCH
(8Wa-40-11)
RIGHT REAR DOOR AJAR SWITCH
(8Wa-40-11)
LEFT FRONT DOOR AJAR SWITCH
(8Wa-40-11)
LEFT REAR DOOR AJAR SWITCH
(8Wa-40-11)

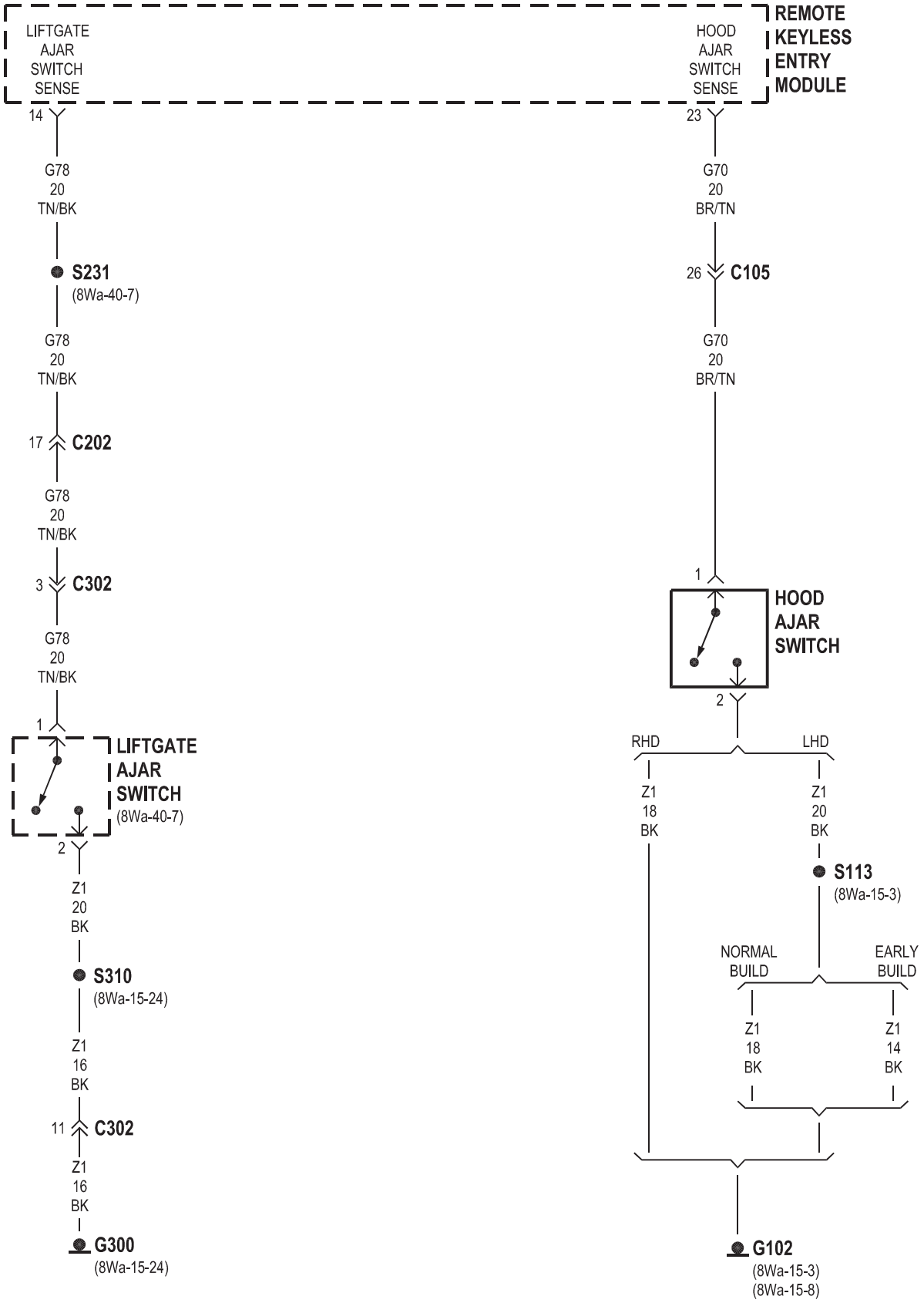
REMOTE KEYLESS ENTRY MODULE
LIFTGATE AJAR SWITCH SENSE
HOOD AJAR SWITCH SENSE
14
23
G78 20 TN/BK
G70 20 BR/TN
S231
(8Wa-40-7)
26
C105
G78 20 TN/BK
G70 20 BR/TN
17
C202
G78 20 TN/BK
3
C302
G78 20 TN/BK
1
HOOD AJAR SWITCH
2
1
LIFTGATE AJAR SWITCH
(8Wa-40-7)
2
RHD
LHD
Z1 18 BK
Z1 20 BK
Z1 20 BK
S113
(8Wa-15-3)
S310
(8Wa-15-24)
NORMAL BUILD
EARLY BUILD
Z1 16 BK
Z1 18 BK
Z1 14 BK
11
C302
Z1 16 BK
G300
(8Wa-15-24)
G102
(8Wa-15-3)
(8Wa-15-8)

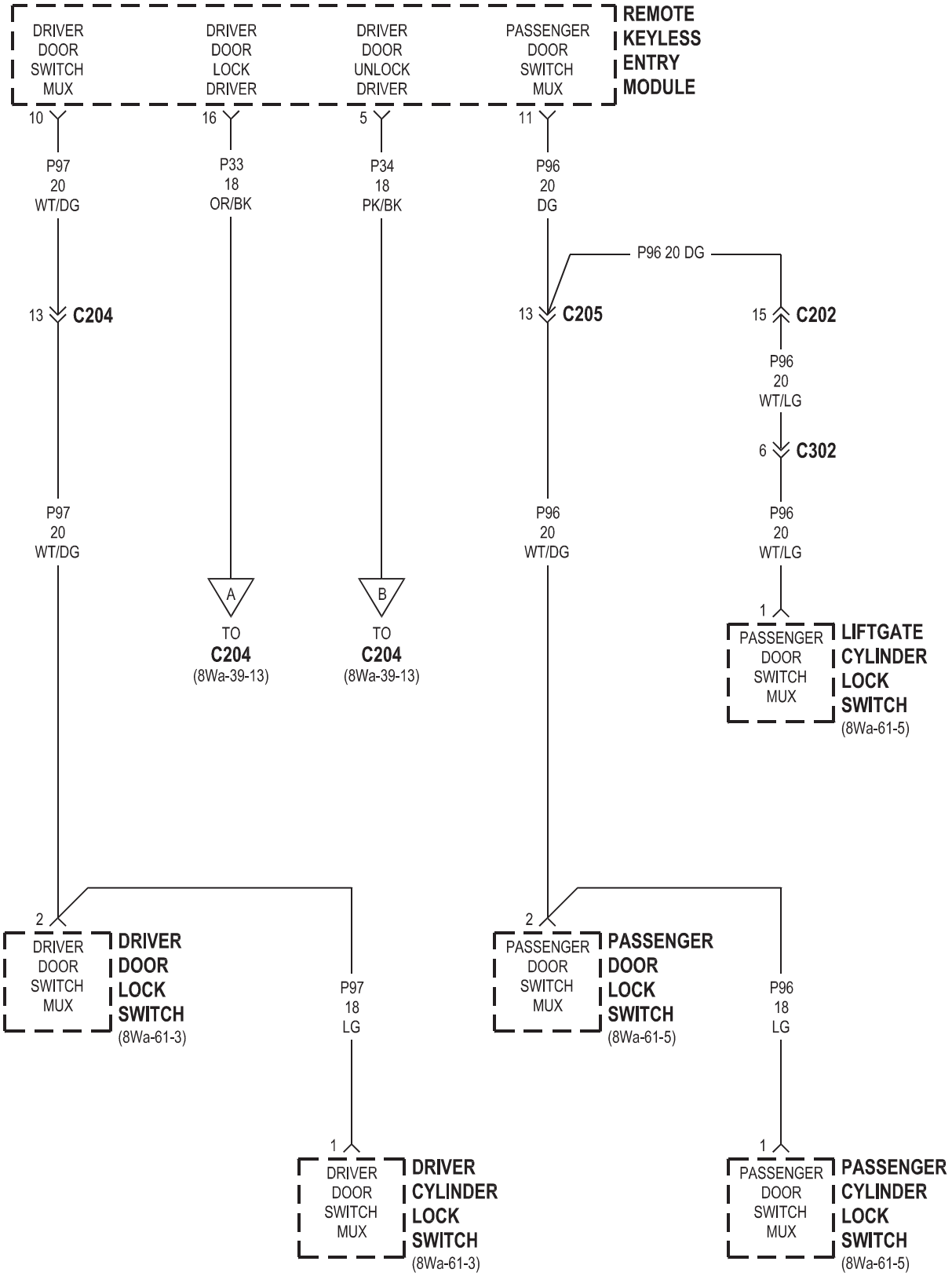
DRIVER DOOR SWITCH MUX
DRIVER DOOR LOCK DRIVER
DRIVER DOOR UNLOCK DRIVER
PASSENGER DOOR SWITCH MUX
REMOTE KEYLESS ENTRY MODULE
10
16
5
11
P97 20 WT/DG
P33 18 OR/BK
P34 18 PK/BK
P96 20 DG
P96 20 DG
13 C204
13 C205
15 C202
P96 20 WT/LG
6 C302
P97 20 WT/DG
P96 20 WT/DG
P96 20 WT/LG
A
B
TO C204 (8Wa-39-13)
TO C204 (8Wa-39-13)
1
PASSENGER DOOR SWITCH MUX
LIFTGATE CYLINDER LOCK SWITCH (8Wa-61-5)
2
DRIVER DOOR SWITCH MUX
DRIVER DOOR LOCK SWITCH (8Wa-61-3)
P97 18 LG
2
PASSENGER DOOR SWITCH MUX
PASSENGER DOOR LOCK SWITCH (8Wa-61-5)
P96 18 LG
1
DRIVER DOOR SWITCH MUX
DRIVER CYLINDER LOCK SWITCH (8Wa-61-3)
1
PASSENGER DOOR SWITCH MUX
PASSENGER CYLINDER LOCK SWITCH (8Wa-61-5)

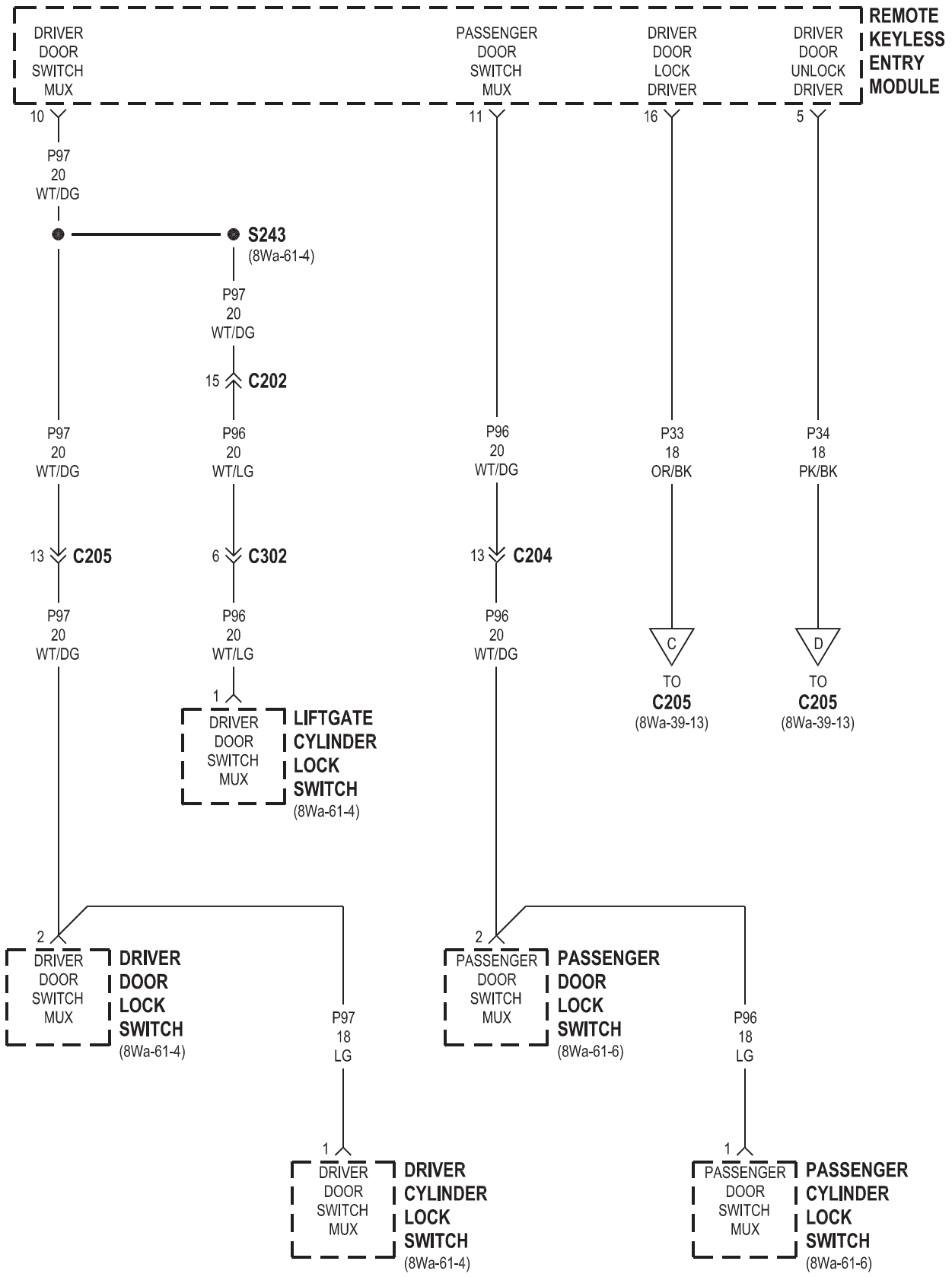
REMOTE KEYLESS ENTRY MODULE
DRIVER DOOR SWITCH MUX
PASSENGER DOOR SWITCH MUX
DRIVER DOOR LOCK DRIVER
DRIVER DOOR UNLOCK DRIVER
10
11
16
5
P97 20 WT/DG
S243
(8Wa-61-4)
P97 20 WT/DG
15
C202
P97 20 WT/DG
P96 20 WT/LG
P96 20 WT/DG
P33 18 OR/BK
P34 18 PK/BK
13
C205
6
C302
13
C204
P97 20 WT/DG
P96 20 WT/LG
P96 20 WT/DG
C
D
TO C205 (8Wa-39-13)
TO C205 (8Wa-39-13)
1
DRIVER DOOR SWITCH MUX
LIFTGATE CYLINDER LOCK SWITCH
(8Wa-61-4)
2
DRIVER DOOR SWITCH MUX
DRIVER DOOR LOCK SWITCH
(8Wa-61-4)
2
PASSENGER DOOR SWITCH MUX
PASSENGER DOOR LOCK SWITCH
(8Wa-61-6)
P97 18 LG
P96 18 LG
1
DRIVER DOOR SWITCH MUX
DRIVER CYLINDER LOCK SWITCH
(8Wa-61-4)
1
PASSENGER DOOR SWITCH MUX
PASSENGER CYLINDER LOCK SWITCH
(8Wa-61-6)

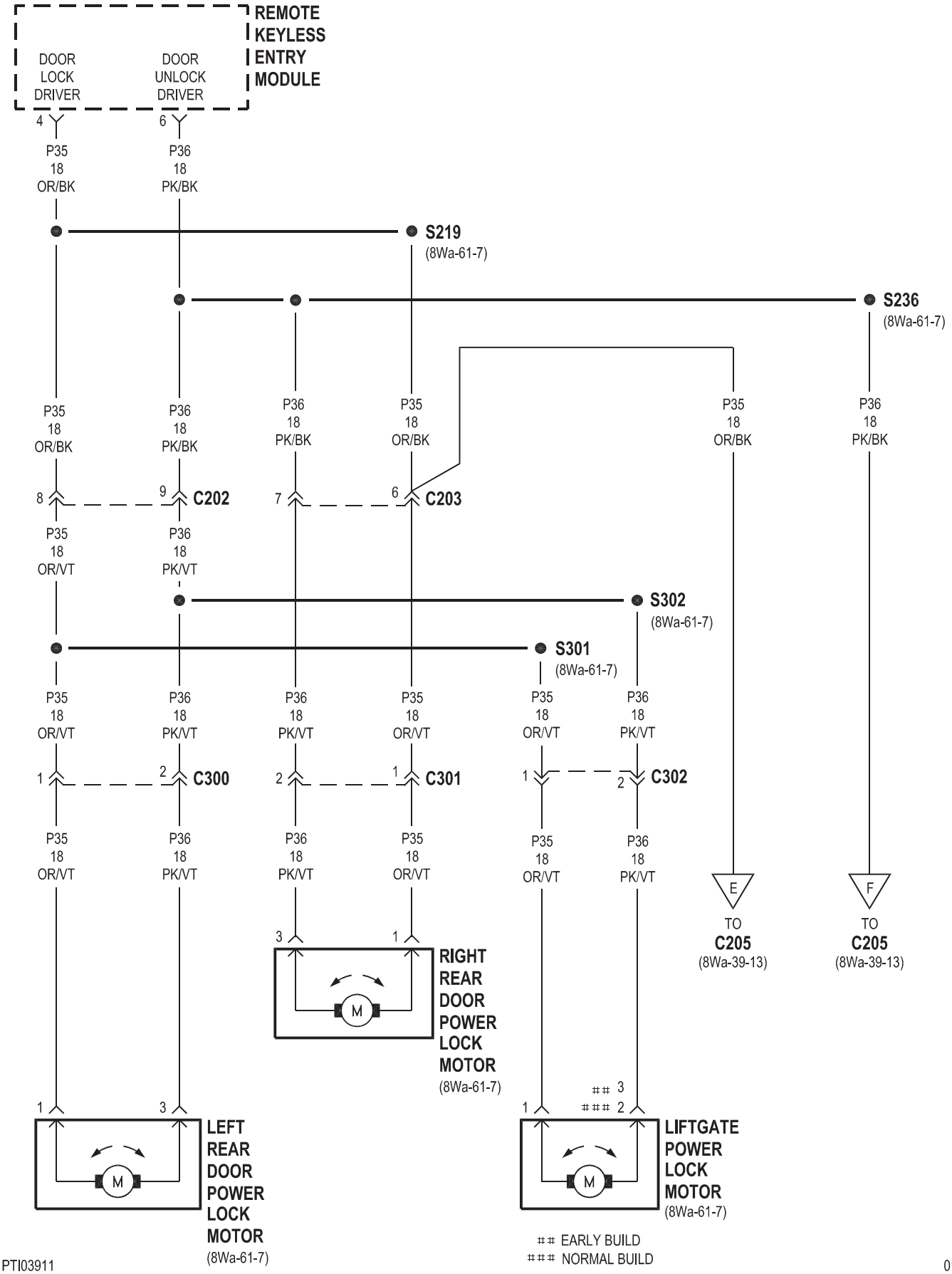
REMOTE KEYLESS ENTRY MODULE
DOOR LOCK DRIVER
DOOR UNLOCK DRIVER
4
6
P35 18 OR/BK
P36 18 PK/BK
S219
(8Wa-61-7)
S236
(8Wa-61-7)
P35 18 OR/BK
P36 18 PK/BK
P36 18 PK/BK
P35 18 OR/BK
P35 18 OR/BK
P36 18 PK/BK
8
9
C202
7
6
C203
P35 18 OR/VT
P36 18 PK/VT
S302
(8Wa-61-7)
S301
(8Wa-61-7)
P35 18 OR/VT
P36 18 PK/VT
P36 18 PK/VT
P35 18 OR/VT
P35 18 OR/VT
P36 18 PK/VT
1
2
C300
2
1
C301
1
2
C302
P35 18 OR/VT
P36 18 PK/VT
P36 18 PK/VT
P35 18 OR/VT
P35 18 OR/VT
P36 18 PK/VT
E
TO
C205
(8Wa-39-13)
F
TO
C205
(8Wa-39-13)
3
1
M
RIGHT REAR DOOR POWER LOCK MOTOR
(8Wa-61-7)
1
3
M
LEFT REAR DOOR POWER LOCK MOTOR
(8Wa-61-7)
1
3
2
M
LIFTGATE POWER LOCK MOTOR
(8Wa-61-7)
EARLY BUILD
NORMAL BUILD

RHD

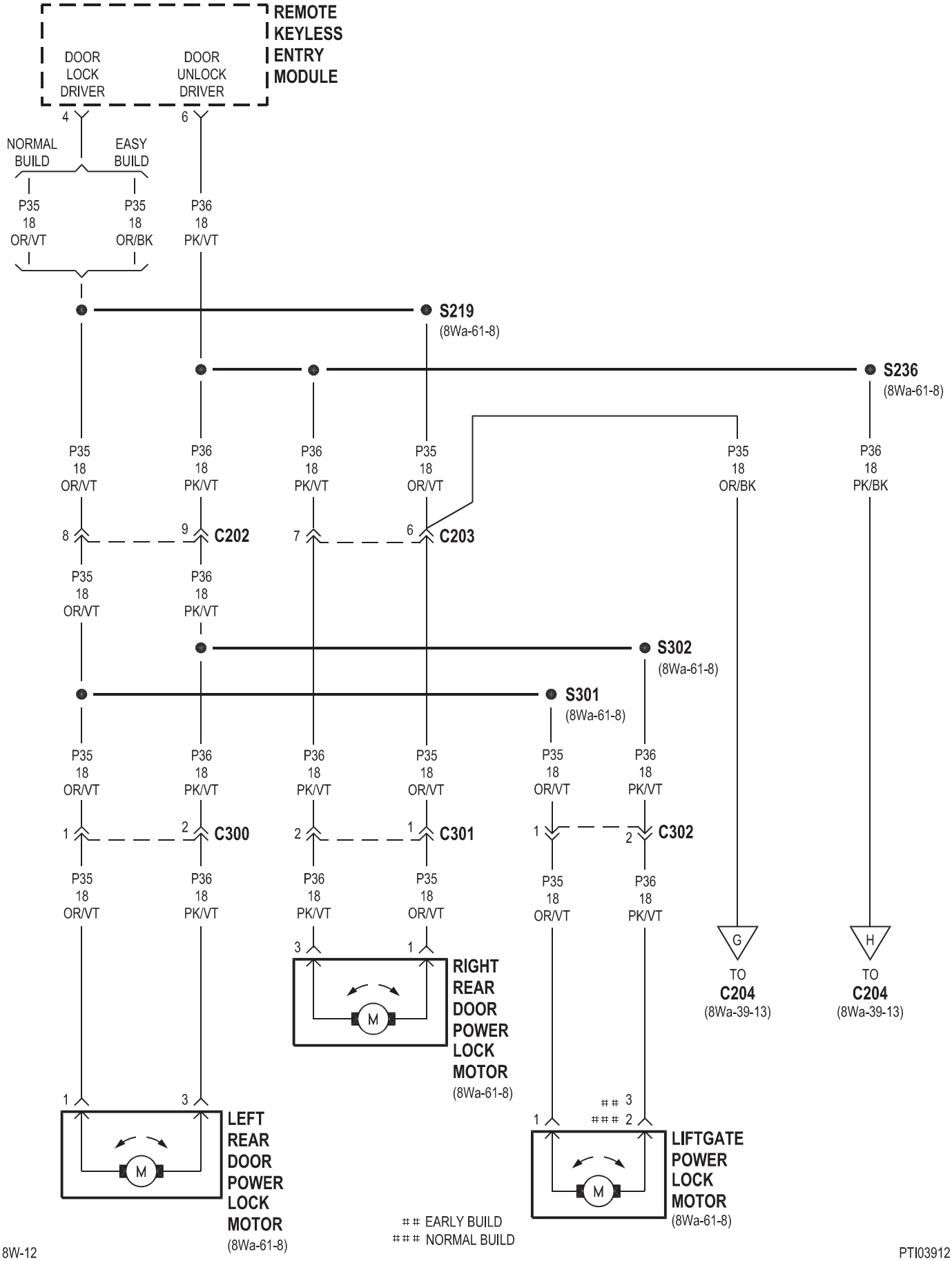
REMOTE KEYLESS ENTRY MODULE
DOOR LOCK DRIVER
DOOR UNLOCK DRIVER
4
6
NORMAL BUILD
EASY BUILD
P35 18 OR/VT
P35 18 OR/BK
P36 18 PK/VT
S219
(8Wa-61-8)
S236
(8Wa-61-8)
P35 18 OR/VT
P36 18 PK/VT
P36 18 PK/VT
P35 18 OR/VT
P35 18 OR/BK
P36 18 PK/BK
8
9
C202
7
6
C203
P35 18 OR/VT
P36 18 PK/VT
S302
(8Wa-61-8)
S301
(8Wa-61-8)
P35 18 OR/VT
P36 18 PK/VT
P36 18 PK/VT
P35 18 OR/VT
P35 18 OR/VT
P36 18 PK/VT
1
2
C300
2
1
C301
1
2
C302
P35 18 OR/VT
P36 18 PK/VT
P36 18 PK/VT
P35 18 OR/VT
P35 18 OR/VT
P36 18 PK/VT
3
1
M
RIGHT REAR DOOR POWER LOCK MOTOR
(8Wa-61-8)
G
TO C204
(8Wa-39-13)
H
TO C204
(8Wa-39-13)
1
3
M
LEFT REAR DOOR POWER LOCK MOTOR
(8Wa-61-8)
1
3
2
M
LIFTGATE POWER LOCK MOTOR
(8Wa-61-8)
EARLY BUILD
NORMAL BUILD

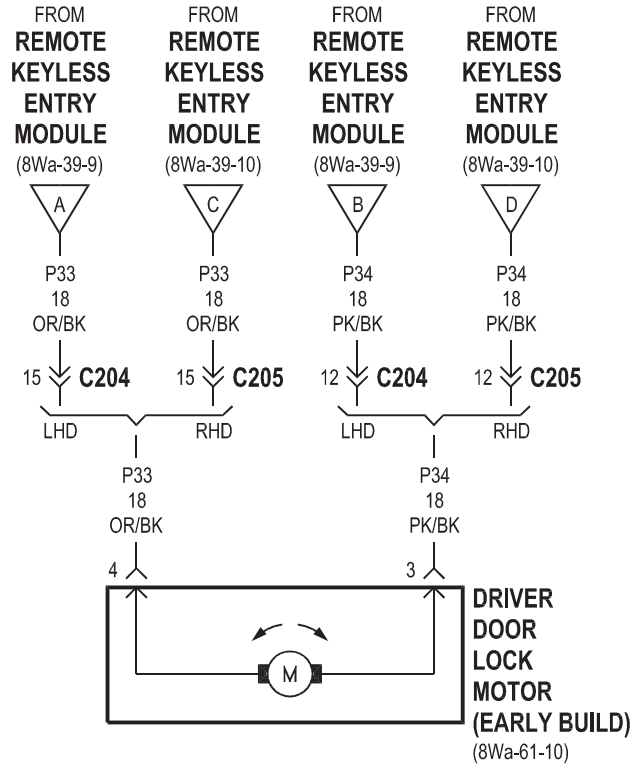
FROM REMOTE KEYLESS ENTRY MODULE (8Wa-39-9)
FROM REMOTE KEYLESS ENTRY MODULE (8Wa-39-10)
FROM REMOTE KEYLESS ENTRY MODULE (8Wa-39-9)
FROM REMOTE KEYLESS ENTRY MODULE (8Wa-39-10)
A
C
B
D
P33 18 OR/BK
P33 18 OR/BK
P34 18 PK/BK
P34 18 PK/BK
15 C204
15 C205
12 C204
12 C205
LHD
RHD
LHD
RHD
P33 18 OR/BK
P34 18 PK/BK
4
3
M
DRIVER DOOR LOCK MOTOR (EARLY BUILD)
(8Wa-61-10)

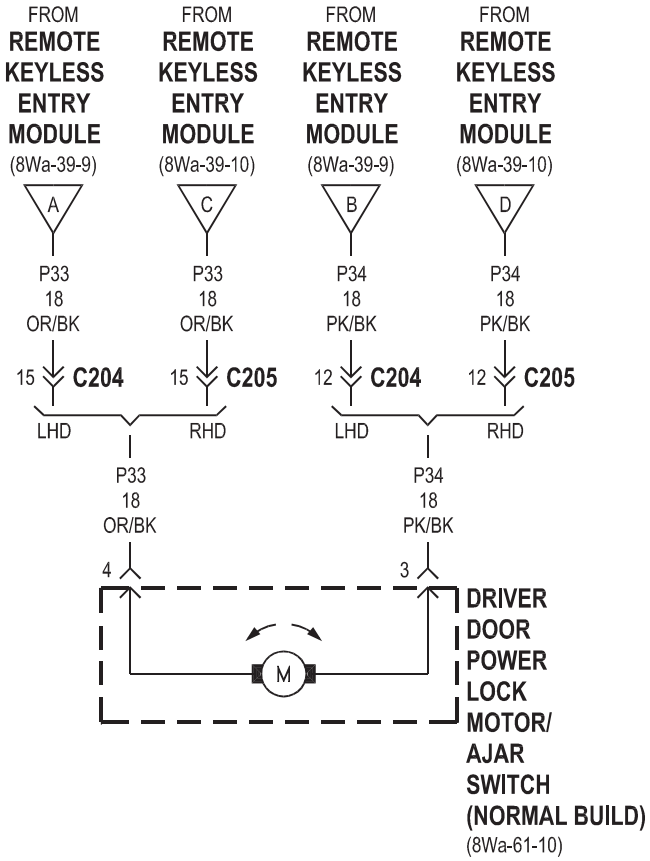
FROM REMOTE KEYLESS ENTRY MODULE (8Wa-39-9)
FROM REMOTE KEYLESS ENTRY MODULE (8Wa-39-10)
FROM REMOTE KEYLESS ENTRY MODULE (8Wa-39-9)
FROM REMOTE KEYLESS ENTRY MODULE (8Wa-39-10)
A
C
B
D
P33 18 OR/BK
P33 18 OR/BK
P34 18 PK/BK
P34 18 PK/BK
15 C204
15 C205
12 C204
12 C205
LHD
RHD
LHD
RHD
P33 18 OR/BK
P34 18 PK/BK
4
3
M
DRIVER DOOR POWER LOCK MOTOR/ AJAR SWITCH (NORMAL BUILD)
(8Wa-61-10)

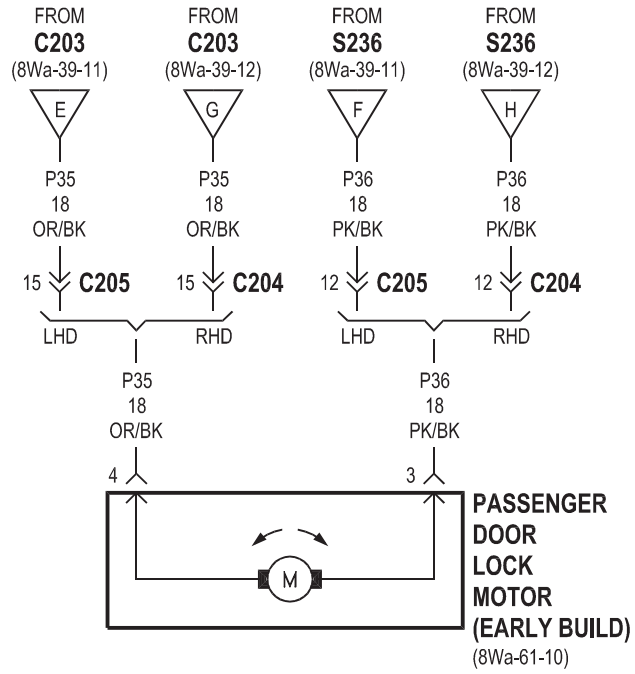
FROM C203 (8Wa-39-11)
FROM C203 (8Wa-39-12)
FROM S236 (8Wa-39-11)
FROM S236 (8Wa-39-12)
E
G
F
H
P35 18 OR/BK
P35 18 OR/BK
P36 18 PK/BK
P36 18 PK/BK
15 C205
15 C204
12 C205
12 C204
LHD
RHD
LHD
RHD
P35 18 OR/BK
P36 18 PK/BK
4
3
M
PASSENGER DOOR LOCK MOTOR (EARLY BUILD)
(8Wa-61-10)

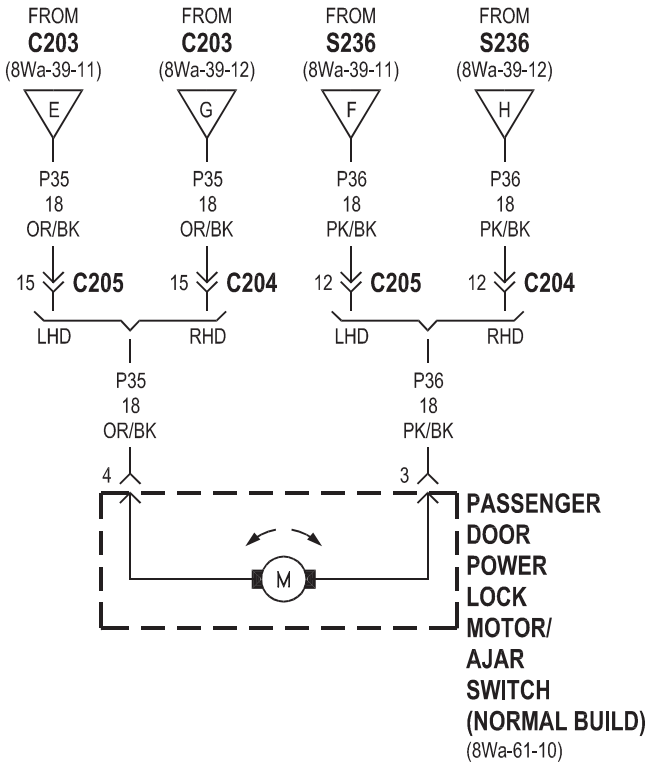
FROM C203 (8Wa-39-11)
FROM C203 (8Wa-39-12)
FROM S236 (8Wa-39-11)
FROM S236 (8Wa-39-12)
E
G
F
H
P35 18 OR/BK
P35 18 OR/BK
P36 18 PK/BK
P36 18 PK/BK
15 C205
15 C204
12 C205
12 C204
LHD
RHD
LHD
RHD
P35 18 OR/BK
P36 18 PK/BK
4
3
M
PASSENGER DOOR POWER LOCK MOTOR/ AJAR SWITCH (NORMAL BUILD)
(8Wa-61-10)

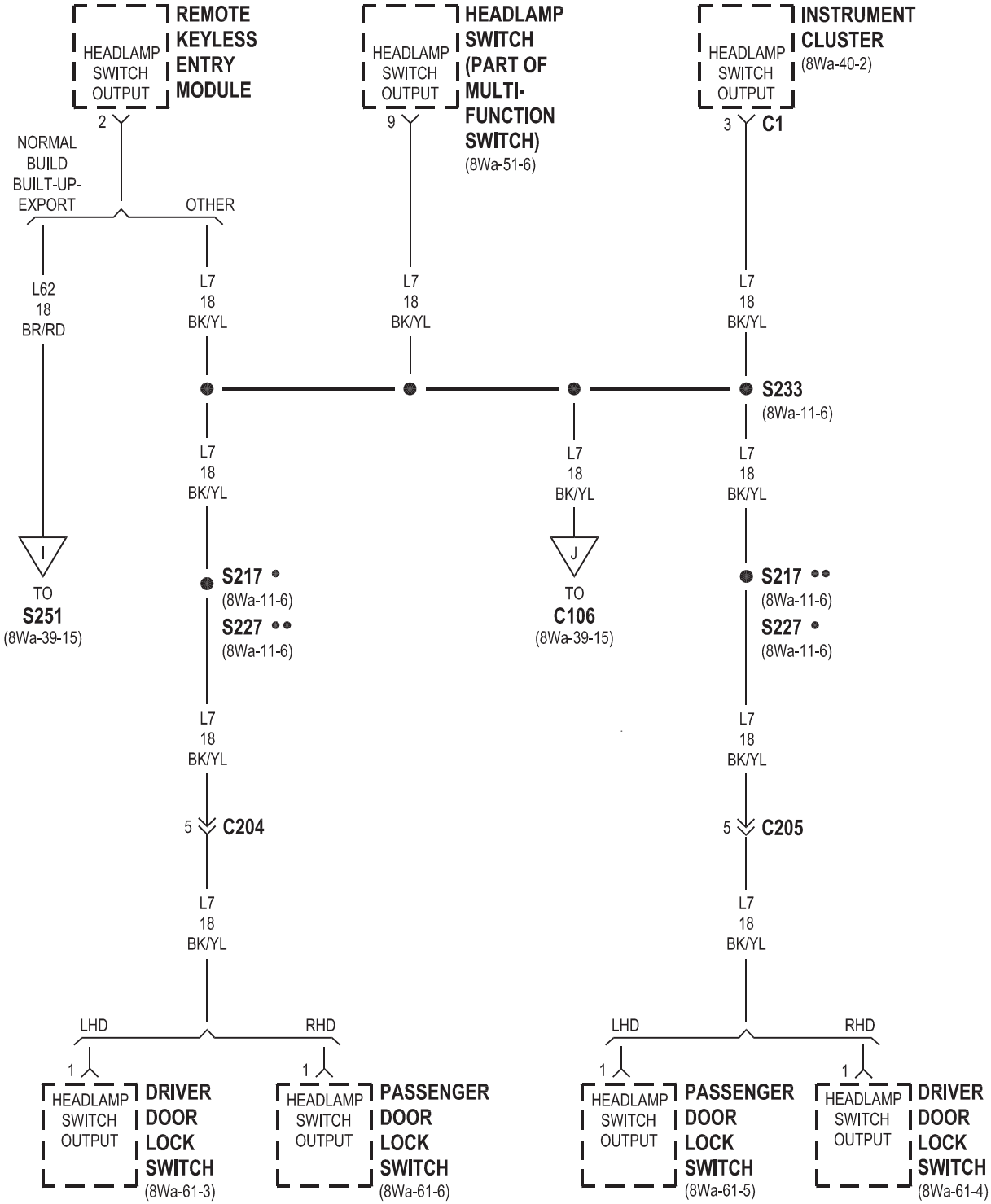
REMOTE KEYLESS ENTRY MODULE
HEADLAMP SWITCH OUTPUT
2
HEADLAMP SWITCH (PART OF MULTI-FUNCTION SWITCH)
(8Wa-51-6)
HEADLAMP SWITCH OUTPUT
9
INSTRUMENT CLUSTER
(8Wa-40-2)
HEADLAMP SWITCH OUTPUT
3
C1
NORMAL BUILD BUILT-UP-EXPORT
OTHER
L62 18 BR/RD
L7 18 BK/YL
L7 18 BK/YL
L7 18 BK/YL
S233
(8Wa-11-6)
L7 18 BK/YL
L7 18 BK/YL
L7 18 BK/YL
I
TO
S251
(8Wa-39-15)
S217 •
(8Wa-11-6)
S227 ••
(8Wa-11-6)
J
TO
C106
(8Wa-39-15)
S217 ••
(8Wa-11-6)
S227 •
(8Wa-11-6)
L7 18 BK/YL
L7 18 BK/YL
5
C204
5
C205
L7 18 BK/YL
L7 18 BK/YL
LHD
RHD
LHD
RHD
1
HEADLAMP SWITCH OUTPUT
DRIVER DOOR LOCK SWITCH
(8Wa-61-3)
1
HEADLAMP SWITCH OUTPUT
PASSENGER DOOR LOCK SWITCH
(8Wa-61-6)
1
HEADLAMP SWITCH OUTPUT
PASSENGER DOOR LOCK SWITCH
(8Wa-61-5)
1
HEADLAMP SWITCH OUTPUT
DRIVER DOOR LOCK SWITCH
(8Wa-61-4)

• LHD
•• RHD

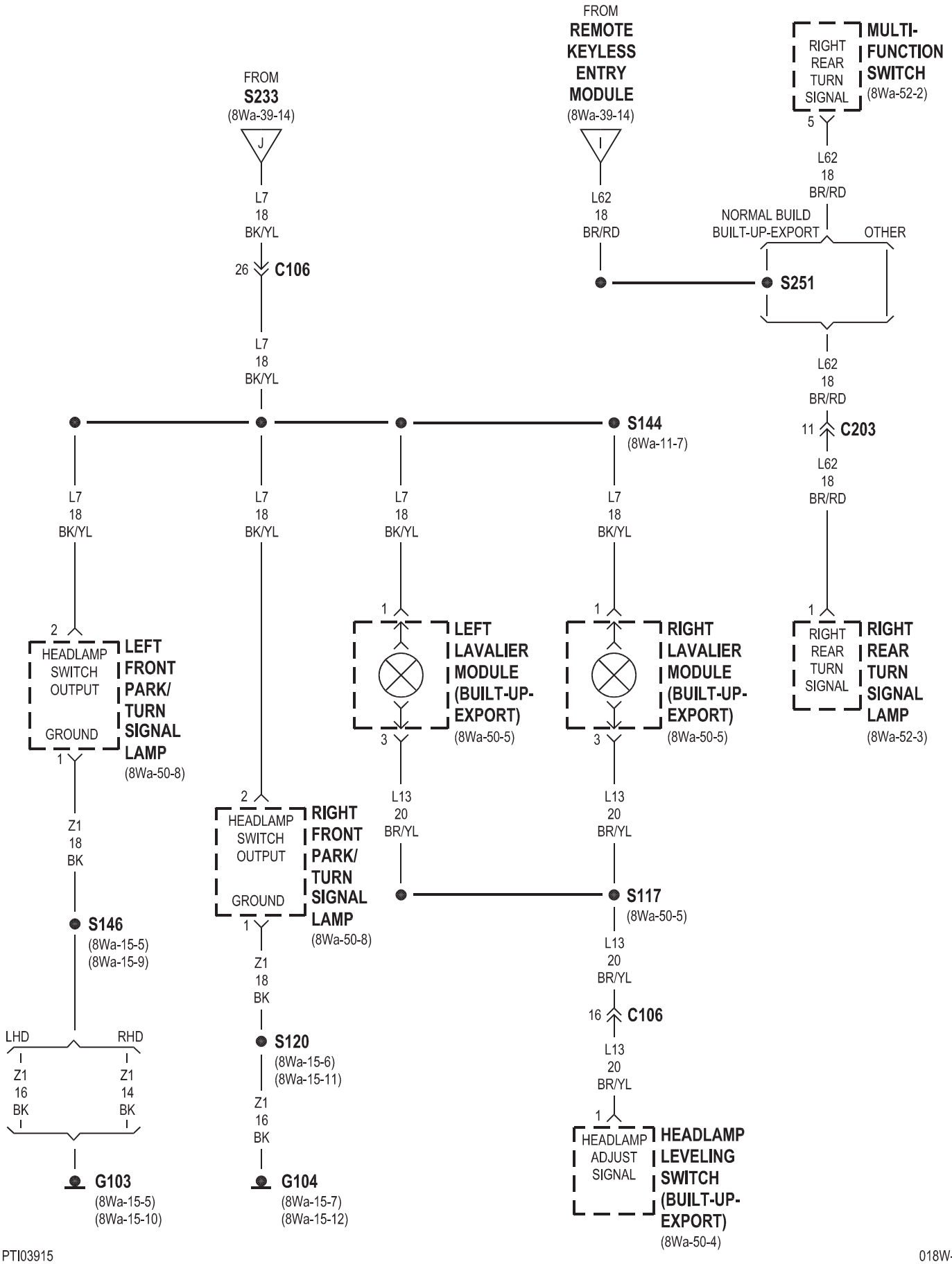
FROM
S233
(8Wa-39-14)
J
L7
18
BK/YL
26
C106
L7
18
BK/YL
FROM
REMOTE
KEYLESS
ENTRY
MODULE
(8Wa-39-14)
I
L62
18
BR/RD
RIGHT
REAR
TURN
SIGNAL
MULTI-
FUNCTION
SWITCH
(8Wa-52-2)
5
L62
18
BR/RD
NORMAL BUILD
BUILT-UP-EXPORT
OTHER
S251
L62
18
BR/RD
11
C203
L62
18
BR/RD
S144
(8Wa-11-7)
L7
18
BK/YL
L7
18
BK/YL
L7
18
BK/YL
L7
18
BK/YL
2
HEADLAMP
SWITCH
OUTPUT
GROUND
1
LEFT
FRONT
PARK/
TURN
SIGNAL
LAMP
(8Wa-50-8)
1
LEFT
LAVALIER
MODULE
(BUILT-UP-
EXPORT)
(8Wa-50-5)
3
1
RIGHT
LAVALIER
MODULE
(BUILT-UP-
EXPORT)
(8Wa-50-5)
3
1
RIGHT
REAR
TURN
SIGNAL
RIGHT
REAR
TURN
SIGNAL
LAMP
(8Wa-52-3)
Z1
18
BK
2
HEADLAMP
SWITCH
OUTPUT
GROUND
1
RIGHT
FRONT
PARK/
TURN
SIGNAL
LAMP
(8Wa-50-8)
L13
20
BR/YL
L13
20
BR/YL
S146
(8Wa-15-5)
(8Wa-15-9)
S117
(8Wa-50-5)
L13
20
BR/YL
16
C106
L13
20
BR/YL
LHD
RHD
Z1
16
BK
Z1
14
BK
Z1
18
BK
S120
(8Wa-15-6)
(8Wa-15-11)
Z1
16
BK
1
HEADLAMP
ADJUST
SIGNAL
HEADLAMP
LEVELING
SWITCH
(BUILT-UP-
EXPORT)
(8Wa-50-4)
G103
(8Wa-15-5)
(8Wa-15-10)
G104
(8Wa-15-7)
(8Wa-15-12)

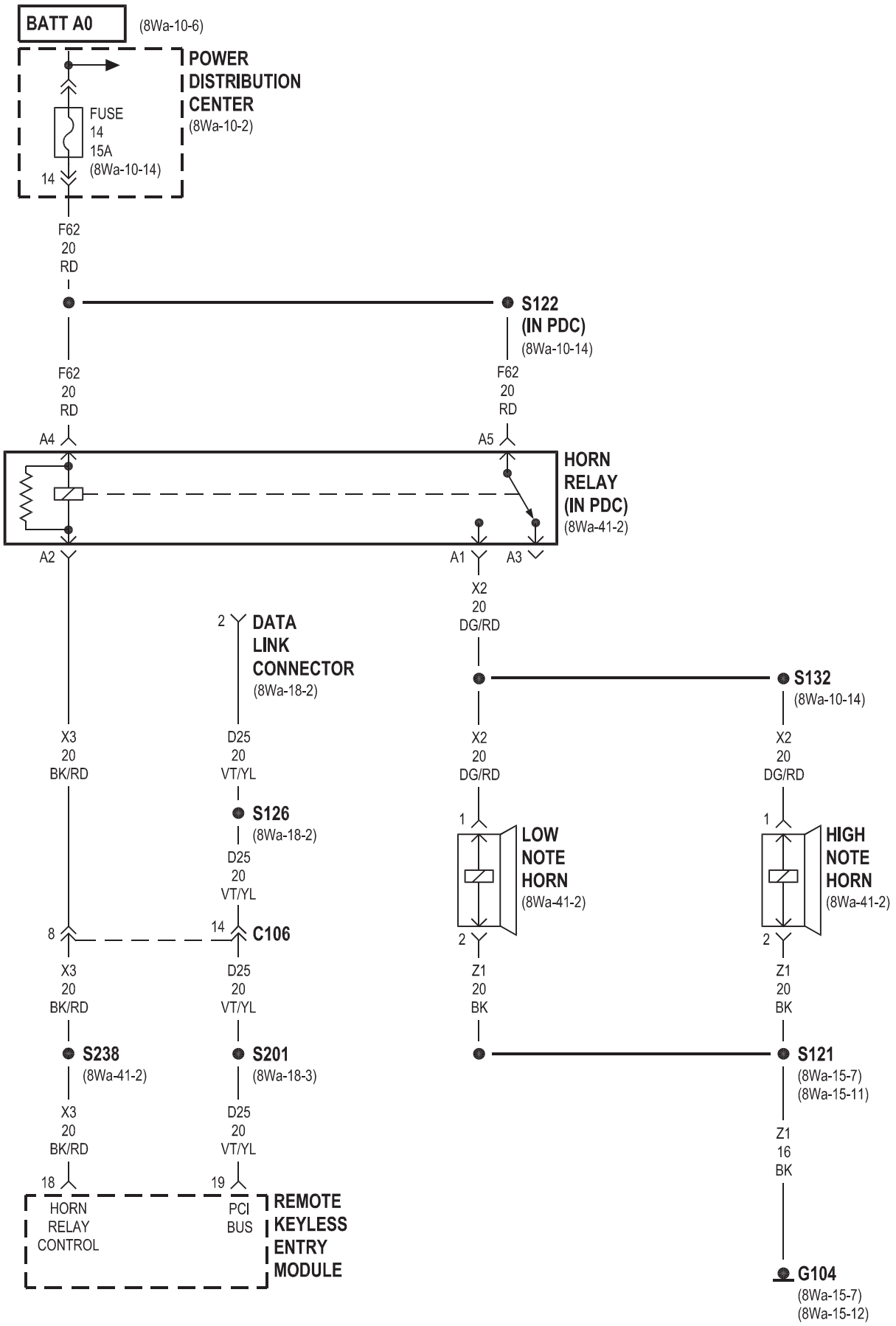
BATT A0
(8Wa-10-6)
POWER DISTRIBUTION CENTER
(8Wa-10-2)
FUSE 14 15A
(8Wa-10-14)
14
F62 20 RD
S122 (IN PDC)
(8Wa-10-14)
F62 20 RD
F62 20 RD
A4
A5
HORN RELAY (IN PDC)
(8Wa-41-2)
A2
A1
A3
X2 20 DG/RD
2
DATA LINK CONNECTOR
(8Wa-18-2)
S132
(8Wa-10-14)
X3 20 BK/RD
D25 20 VT/YL
X2 20 DG/RD
X2 20 DG/RD
S126
(8Wa-18-2)
D25 20 VT/YL
1
LOW NOTE HORN
(8Wa-41-2)
1
HIGH NOTE HORN
(8Wa-41-2)
8
14
C106
2
2
X3 20 BK/RD
D25 20 VT/YL
Z1 20 BK
Z1 20 BK
S238
(8Wa-41-2)
S201
(8Wa-18-3)
S121
(8Wa-15-7)
(8Wa-15-11)
X3 20 BK/RD
D25 20 VT/YL
Z1 16 BK
18
19
HORN RELAY CONTROL
PCI BUS
REMOTE KEYLESS ENTRY MODULE
G104
(8Wa-15-7)
(8Wa-15-12)

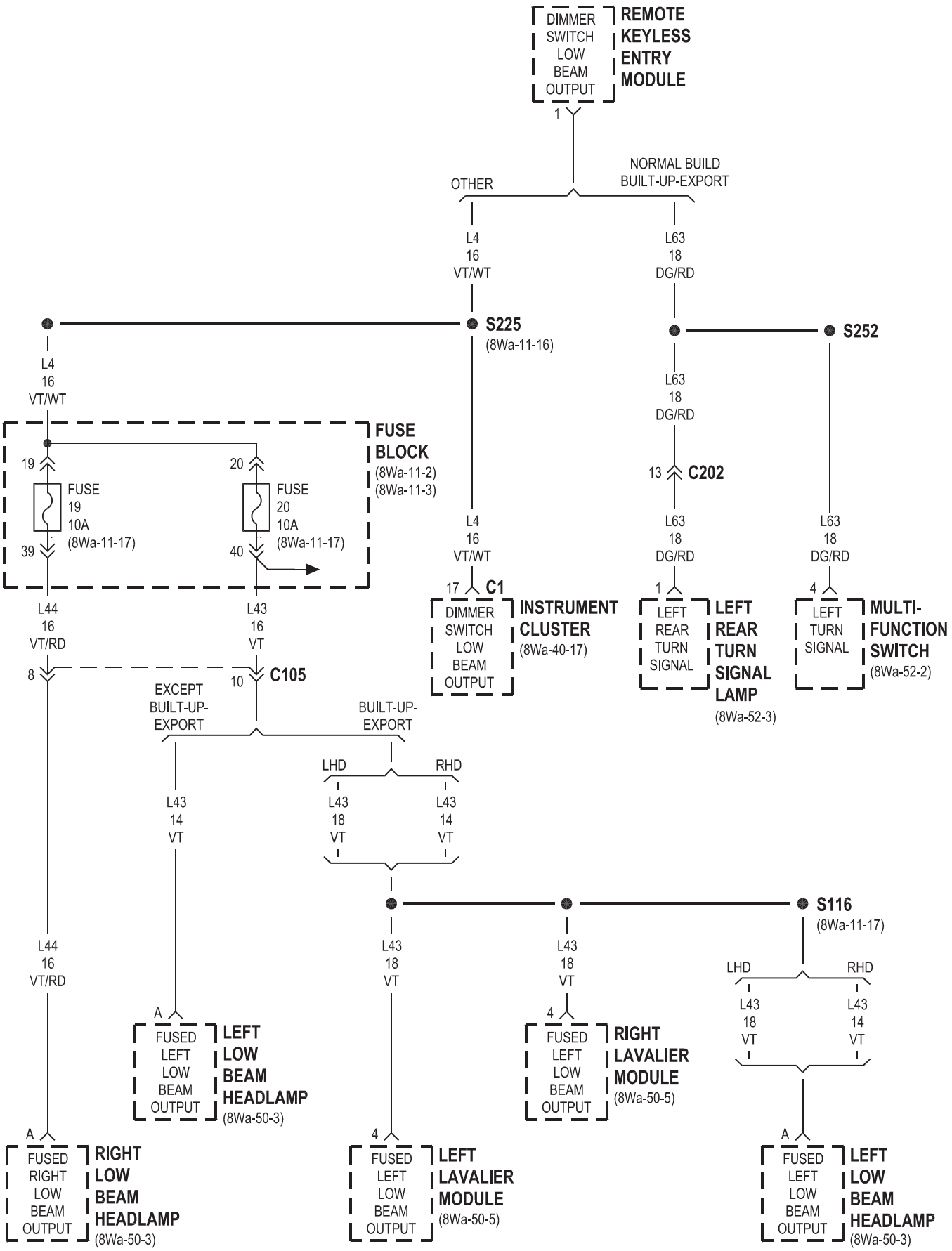
DIMMER SWITCH LOW BEAM OUTPUT
REMOTE KEYLESS ENTRY MODULE
1
OTHER
NORMAL BUILD BUILT-UP-EXPORT
L4 16 VT/WT
L63 18 DG/RD
S225 (8Wa-11-16)
S252
L4 16 VT/WT
L63 18 DG/RD
FUSE BLOCK (8Wa-11-2) (8Wa-11-3)
19
20
FUSE 19 10A (8Wa-11-17)
FUSE 20 10A (8Wa-11-17)
39
40
13 C202
L4 16 VT/WT
L63 18 DG/RD
L63 18 DG/RD
17 C1
DIMMER SWITCH LOW BEAM OUTPUT
INSTRUMENT CLUSTER (8Wa-40-17)
1
LEFT REAR TURN SIGNAL
LEFT REAR TURN SIGNAL LAMP (8Wa-52-3)
4
LEFT TURN SIGNAL
MULTI-FUNCTION SWITCH (8Wa-52-2)
L44 16 VT/RD
L43 16 VT
8
10 C105
EXCEPT BUILT-UP-EXPORT
BUILT-UP-EXPORT
LHD
RHD
L43 14 VT
L43 18 VT
L43 14 VT
S116 (8Wa-11-17)
L44 16 VT/RD
L43 18 VT
L43 18 VT
LHD
RHD
L43 18 VT
L43 14 VT
A
FUSED LEFT LOW BEAM OUTPUT
LEFT LOW BEAM HEADLAMP (8Wa-50-3)
4
FUSED LEFT LOW BEAM OUTPUT
RIGHT LAVALIER MODULE (8Wa-50-5)
A
FUSED RIGHT LOW BEAM OUTPUT
RIGHT LOW BEAM HEADLAMP (8Wa-50-3)
4
FUSED LEFT LOW BEAM OUTPUT
LEFT LAVALIER MODULE (8Wa-50-5)
A
FUSED LEFT LOW BEAM OUTPUT
LEFT LOW BEAM HEADLAMP (8Wa-50-3)

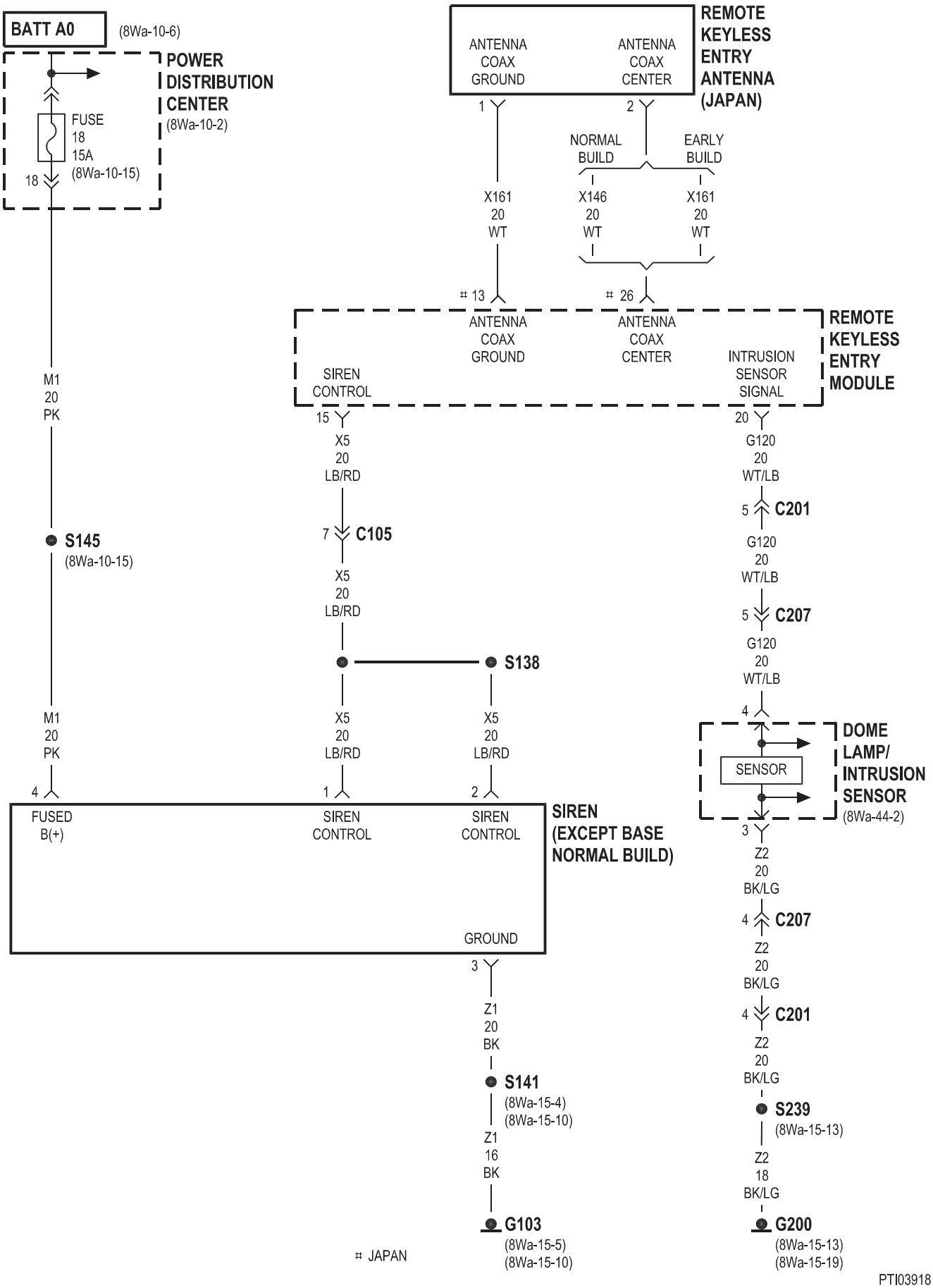
BATT A0
(8Wa-10-6)
POWER DISTRIBUTION CENTER
(8Wa-10-2)
FUSE 18 15A
(8Wa-10-15)
18
M1 20 PK
S145
(8Wa-10-15)
M1 20 PK
4
FUSED B(+)
REMOTE KEYLESS ENTRY ANTENNA (JAPAN)
ANTENNA COAX GROUND
ANTENNA COAX CENTER
1
2
NORMAL BUILD
EARLY BUILD
X161 20 WT
X146 20 WT
X161 20 WT
13
26
REMOTE KEYLESS ENTRY MODULE
ANTENNA COAX GROUND
ANTENNA COAX CENTER
SIREN CONTROL
INTRUSION SENSOR SIGNAL
15
X5 20 LB/RD
7
C105
X5 20 LB/RD
S138
X5 20 LB/RD
X5 20 LB/RD
1
2
SIREN CONTROL
SIREN CONTROL
SIREN (EXCEPT BASE NORMAL BUILD)
GROUND
3
Z1 20 BK
S141
(8Wa-15-4)
(8Wa-15-10)
Z1 16 BK
G103
(8Wa-15-5)
(8Wa-15-10)
20
G120 20 WT/LB
5
C201
G120 20 WT/LB
5
C207
G120 20 WT/LB
4
DOME LAMP/ INTRUSION SENSOR
(8Wa-44-2)
SENSOR
3
Z2 20 BK/LG
4
C207
Z2 20 BK/LG
4
C201
Z2 20 BK/LG
S239
(8Wa-15-13)
Z2 18 BK/LG
G200
(8Wa-15-13)
(8Wa-15-19)
JAPAN

8W-40 INSTRUMENT CLUSTER

Component	Page
A/C- Heater Control Switch	8Wa-40-14
Cargo Lamp	8Wa-40-12
Center Stack Lamp	8Wa-40-14
Circuit Breaker No. 1 (FB)	8Wa-40-17
Controller Antilock Brake	8Wa-40-5
Data Link Connector	8Wa-40-5
Dome Lamp	8Wa-40-12
Dome Lamp/Intrusion Sensor	8Wa-40-12
Driver Door Power Lock Motor/Ajar Switch	8Wa-40-8, 10
Driver Seat Belt Switch	8Wa-40-15, 16
Front Power Window Switch	8Wa-40-14
Fuel Pump Module	8Wa-40-5
Fuse 2 (FB)	8Wa-40-2
Fuse 8 (FB)	8Wa-40-18
Fuse 10 (FB)	8Wa-40-2
Fuse 15 (FB)	8Wa-40-3
Fuse 18 (PDC)	8Wa-40-2
Fuse 19 (PDC)	8Wa-40-3
Fuse 22 (PDC)	8Wa-40-19
Fuse Block	8Wa-40-2, 3, 17, 18
G200	8Wa-40-13, 2
G201	8Wa-40-13, 2, 7
G204	8Wa-40-7
G300	8Wa-40-7
G301	8Wa-40-15, 16
G302	8Wa-40-15, 16
Headlamp Leveling Switch	8Wa-40-14
Headlamp Relay	8Wa-40-18
Headlamp Switch	8Wa-40-2, 12, 13, 15, 16, 17, 18, 19
Ignition Switch	8Wa-40-7
Indicator Drivers	8Wa-40-9, 11, 16
Instrument Cluster	8Wa-40-2, 4, 5, 6, 7, 8, 9, 10, 11, 12, 13, 14, 15, 16, 17, 18, 19
Left Fog Lamp	8Wa-40-18, 19
Left Front Door Ajar Switch	8Wa-40-7, 8, 9, 10, 11
Left Front Park/Turn Signal Lamp	8Wa-40-4
Left Rear Door Ajar Switch	8Wa-40-8, 9, 10, 11
Left Rear Fog Lamp	8Wa-40-19
Left Side Impact Airbag Control Module	8Wa-40-5
Liftgate Ajar Switch	8Wa-40-7
Map/Reading Lamps	8Wa-40-12
Multi- Function Switch	8Wa-40-3, 4, 13
Occupant Restraint Controller	8Wa-40-5
Overhead Console Module	8Wa-40-12, 14
Parking Brake Switch	8Wa-40-15, 16
Passenger Door Power Lock Motor/Ajar Switch	8Wa-40-8, 10
Passenger Seat Belt Switch	8Wa-40-15, 16
Power Distribution Center	8Wa-40-2, 3, 19
Powertrain Control Module	8Wa-40-5
Radio	8Wa-40-5, 14
Rear Window Defogger Switch	8Wa-40-14
Rear Wiper Switch	8Wa-40-14
Remote Keyless Entry Module	8Wa-40-5, 7, 8, 9, 10, 11
Right Fog Lamp	8Wa-40-18, 19
Right Front Door Ajar Switch	8Wa-40-7, 8, 9, 10, 11
Right Front Park/Turn Signal Lamp	8Wa-40-4
Right Rear Door Ajar Switch	8Wa-40-8, 9, 10, 11
Right Rear Fog Lamp	8Wa-40-19
Right Side Impact Airbag Control Module	8Wa-40-5
Sentry Key Immobilizer Module	8Wa-40-5
Traction Control Switch	8Wa-40-14
Transmission Control Module	8Wa-40-5
Transmission Range Indicator Illumination	8Wa-40-14

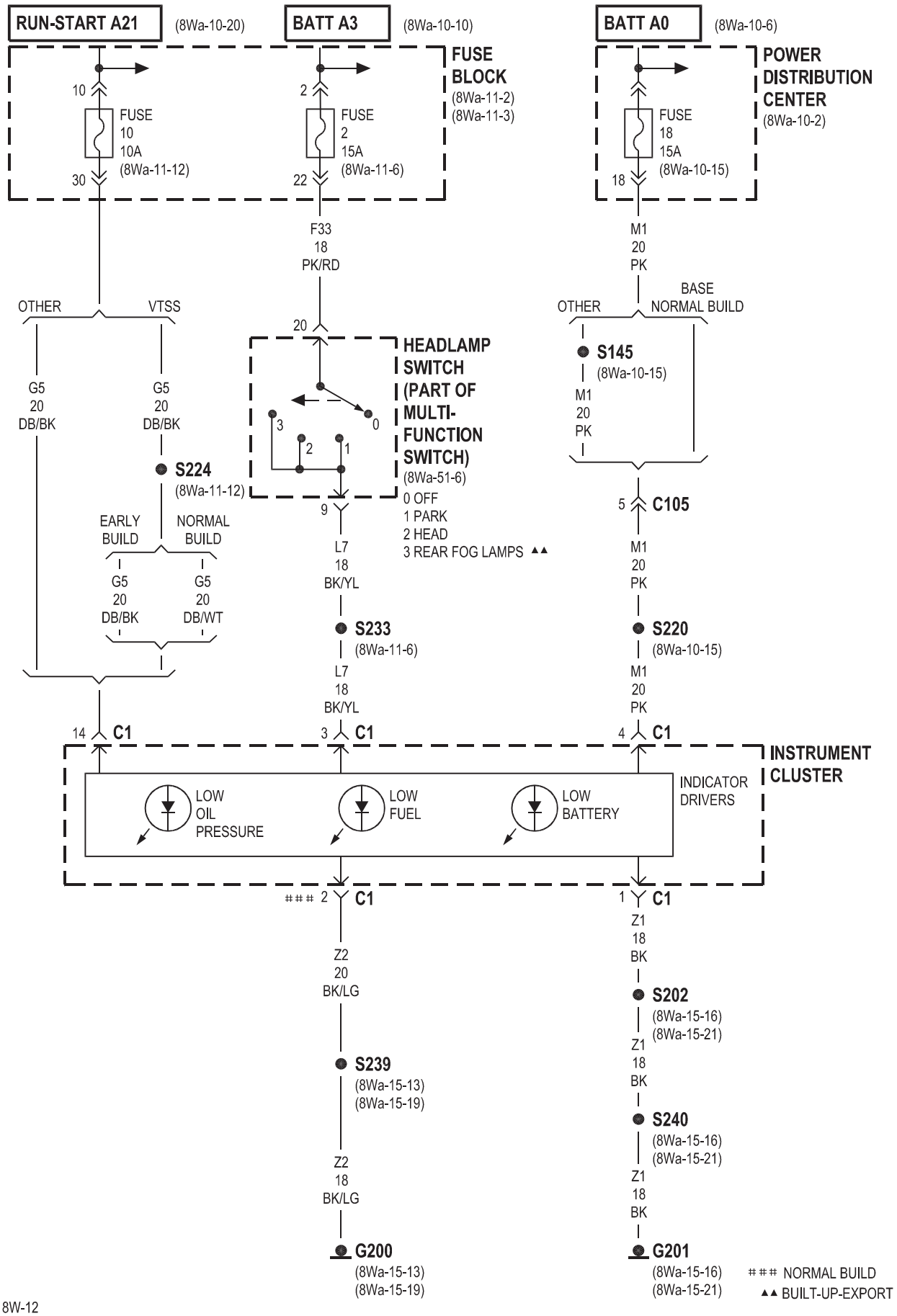
RUN-START A21
(8Wa-10-20)
BATT A3
(8Wa-10-10)
BATT A0
(8Wa-10-6)
FUSE BLOCK
(8Wa-11-2)
(8Wa-11-3)
POWER DISTRIBUTION CENTER
(8Wa-10-2)
10
FUSE 10 10A
(8Wa-11-12)
30
2
FUSE 2 15A
(8Wa-11-6)
22
FUSE 18 15A
(8Wa-10-15)
18
F33 18 PK/RD
M1 20 PK
OTHER
VTSS
OTHER
BASE NORMAL BUILD
20
HEADLAMP SWITCH (PART OF MULTI-FUNCTION SWITCH)
(8Wa-51-6)
0 OFF
1 PARK
2 HEAD
3 REAR FOG LAMPS ▲▲
S145
(8Wa-10-15)
M1 20 PK
G5 20 DB/BK
G5 20 DB/BK
S224
(8Wa-11-12)
EARLY BUILD
NORMAL BUILD
G5 20 DB/BK
G5 20 DB/WT
9
L7 18 BK/YL
5
C105
M1 20 PK
S233
(8Wa-11-6)
S220
(8Wa-10-15)
L7 18 BK/YL
M1 20 PK
14
C1
3
C1
4
C1
INSTRUMENT CLUSTER
INDICATOR DRIVERS
LOW OIL PRESSURE
LOW FUEL
LOW BATTERY
2
C1
1
C1
Z2 20 BK/LG
Z1 18 BK
S202
(8Wa-15-16)
(8Wa-15-21)
S239
(8Wa-15-13)
(8Wa-15-19)
Z1 18 BK
S240
(8Wa-15-16)
(8Wa-15-21)
Z2 18 BK/LG
Z1 18 BK
G200
(8Wa-15-13)
(8Wa-15-19)
G201
(8Wa-15-16)
(8Wa-15-21)
NORMAL BUILD
▲▲ BUILT-UP-EXPORT

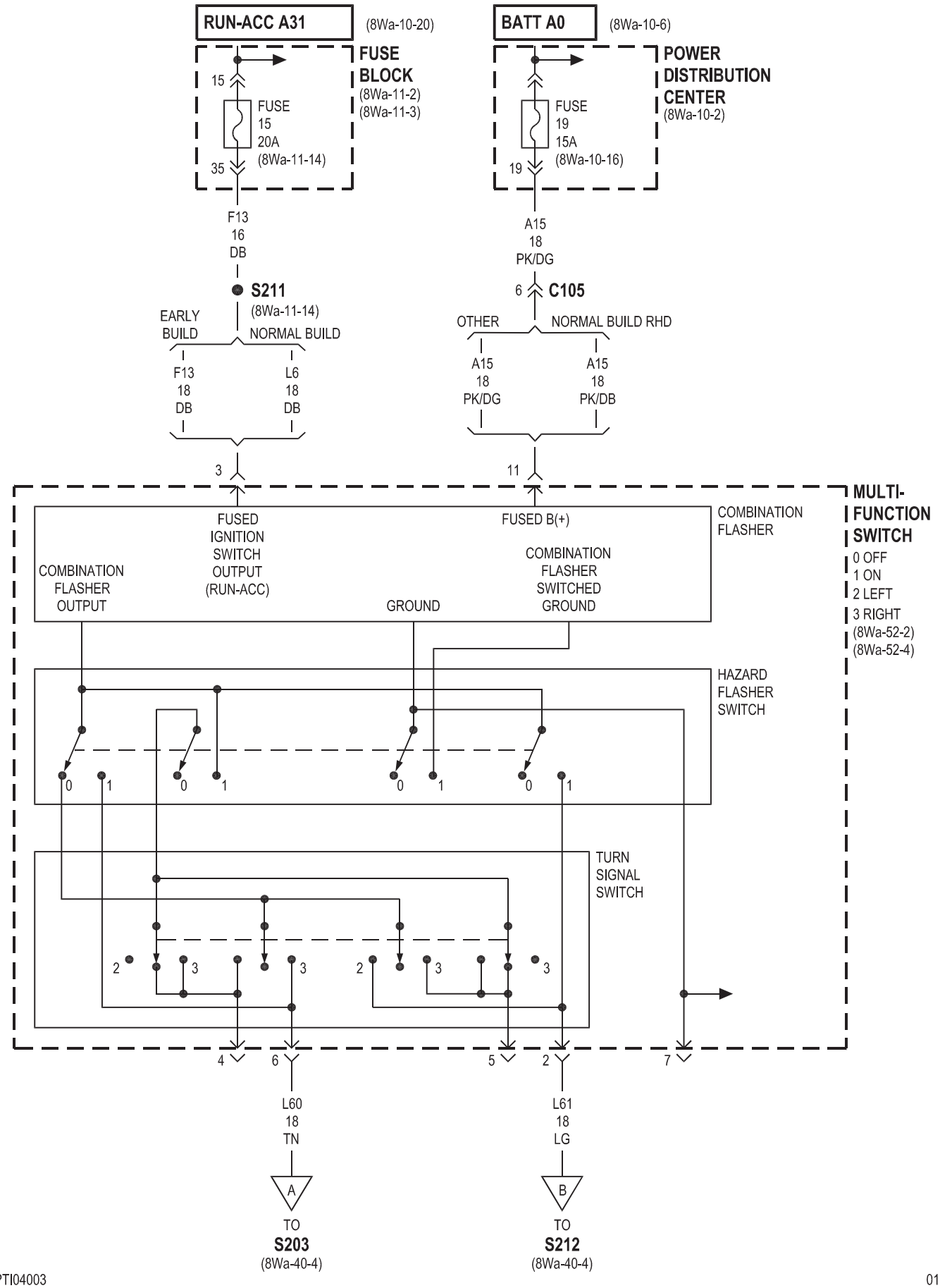
RUN-ACC A31
(8Wa-10-20)
BATT A0
(8Wa-10-6)
FUSE BLOCK
(8Wa-11-2)
(8Wa-11-3)
POWER DISTRIBUTION CENTER
(8Wa-10-2)
15
FUSE 15 20A
(8Wa-11-14)
35
FUSE 19 15A
(8Wa-10-16)
19
F13 16 DB
A15 18 PK/DG
S211
(8Wa-11-14)
6
C105
EARLY BUILD
NORMAL BUILD
OTHER
NORMAL BUILD RHD
F13 18 DB
L6 18 DB
A15 18 PK/DG
A15 18 PK/DB
3
11
MULTI-FUNCTION SWITCH
0 OFF
1 ON
2 LEFT
3 RIGHT
(8Wa-52-2)
(8Wa-52-4)
COMBINATION FLASHER
COMBINATION FLASHER OUTPUT
FUSED IGNITION SWITCH OUTPUT (RUN-ACC)
FUSED B(+)
GROUND
COMBINATION FLASHER SWITCHED GROUND
HAZARD FLASHER SWITCH
TURN SIGNAL SWITCH
4
6
5
2
7
L60 18 TN
L61 18 LG
A
B
TO S203
(8Wa-40-4)
TO S212
(8Wa-40-4)

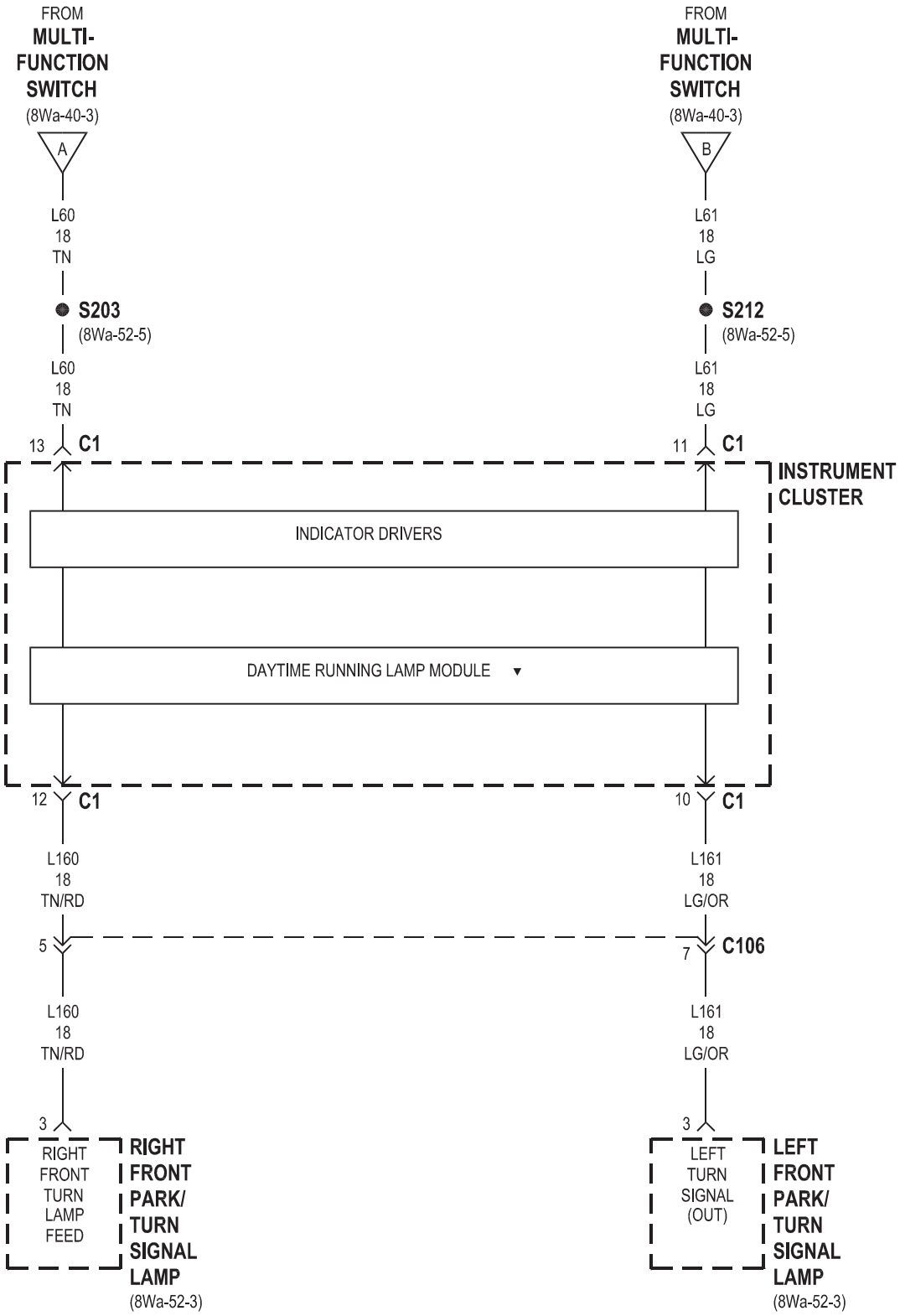
FROM
MULTI-
FUNCTION
SWITCH
(8Wa-40-3)
A
L60
18
TN
S203
(8Wa-52-5)
L60
18
TN
13
C1
FROM
MULTI-
FUNCTION
SWITCH
(8Wa-40-3)
B
L61
18
LG
S212
(8Wa-52-5)
L61
18
LG
11
C1
INSTRUMENT
CLUSTER
INDICATOR DRIVERS
DAYTIME RUNNING LAMP MODULE ▼
12
C1
10
C1
L160
18
TN/RD
L161
18
LG/OR
5
7
C106
L160
18
TN/RD
L161
18
LG/OR
3
3
RIGHT
FRONT
TURN
LAMP
FEED
RIGHT
FRONT
PARK/
TURN
SIGNAL
LAMP
(8Wa-52-3)
LEFT
TURN
SIGNAL
(OUT)
LEFT
FRONT
PARK/
TURN
SIGNAL
LAMP
(8Wa-52-3)

▼ CANADA ONLY

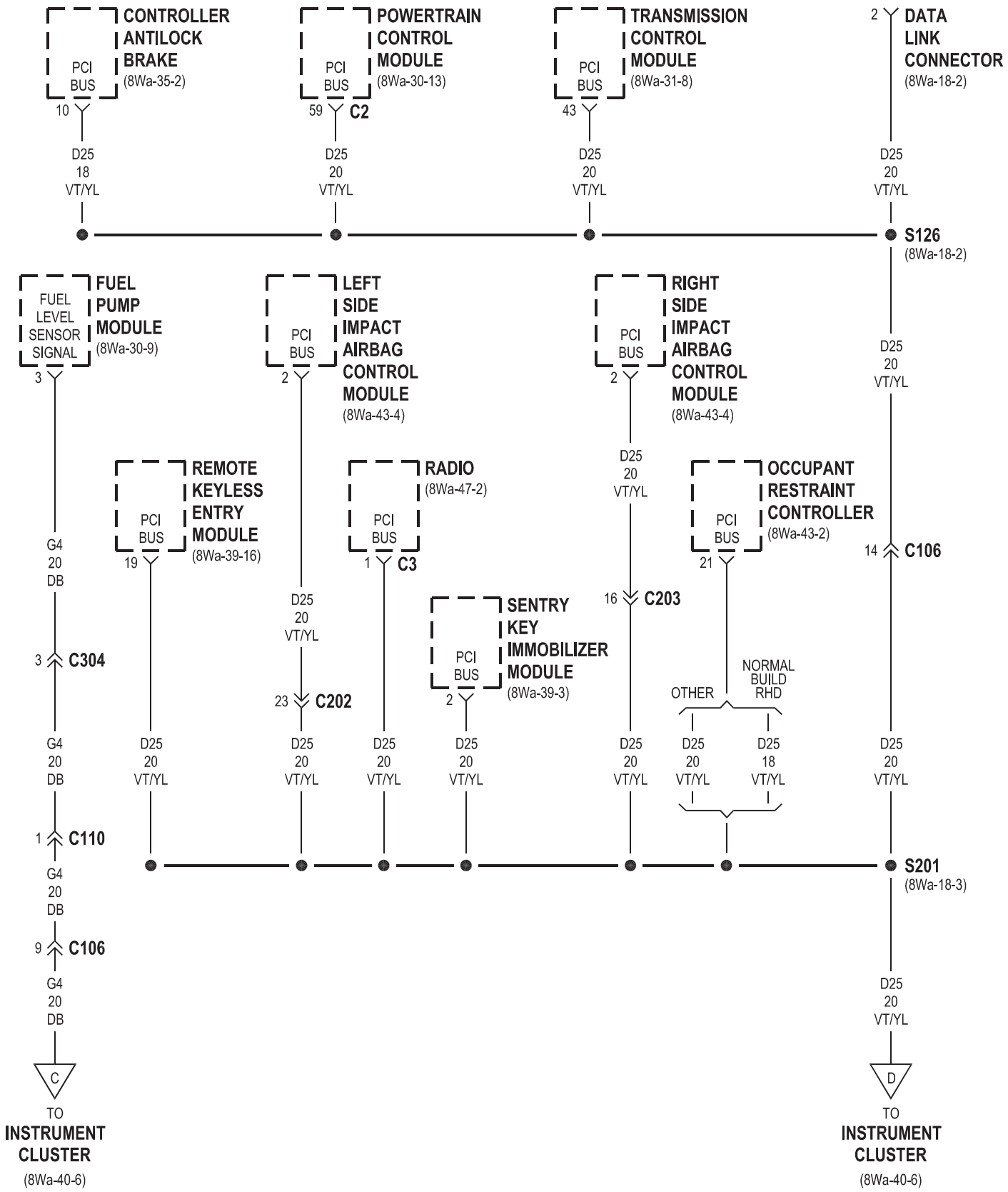
CONTROLLER ANTILOCK BRAKE (8Wa-35-2)
PCI BUS
10
D25 18 VT/YL
POWERTRAIN CONTROL MODULE (8Wa-30-13)
PCI BUS
59
C2
D25 20 VT/YL
TRANSMISSION CONTROL MODULE (8Wa-31-8)
PCI BUS
43
D25 20 VT/YL
2
DATA LINK CONNECTOR (8Wa-18-2)
D25 20 VT/YL
S126 (8Wa-18-2)
FUEL PUMP MODULE (8Wa-30-9)
FUEL LEVEL SENSOR SIGNAL
3
G4 20 DB
3
C304
G4 20 DB
1
C110
G4 20 DB
9
C106
G4 20 DB
C
TO INSTRUMENT CLUSTER (8Wa-40-6)
LEFT SIDE IMPACT AIRBAG CONTROL MODULE (8Wa-43-4)
PCI BUS
2
D25 20 VT/YL
23
C202
D25 20 VT/YL
RIGHT SIDE IMPACT AIRBAG CONTROL MODULE (8Wa-43-4)
PCI BUS
2
D25 20 VT/YL
16
C203
D25 20 VT/YL
D25 20 VT/YL
14
C106
D25 20 VT/YL
REMOTE KEYLESS ENTRY MODULE (8Wa-39-16)
PCI BUS
19
D25 20 VT/YL
RADIO (8Wa-47-2)
PCI BUS
1
C3
D25 20 VT/YL
SENTRY KEY IMMOBILIZER MODULE (8Wa-39-3)
PCI BUS
2
D25 20 VT/YL
OCCUPANT RESTRAINT CONTROLLER (8Wa-43-2)
PCI BUS
21
OTHER
NORMAL BUILD RHD
D25 20 VT/YL
D25 18 VT/YL
S201 (8Wa-18-3)
D25 20 VT/YL
D
TO INSTRUMENT CLUSTER (8Wa-40-6)

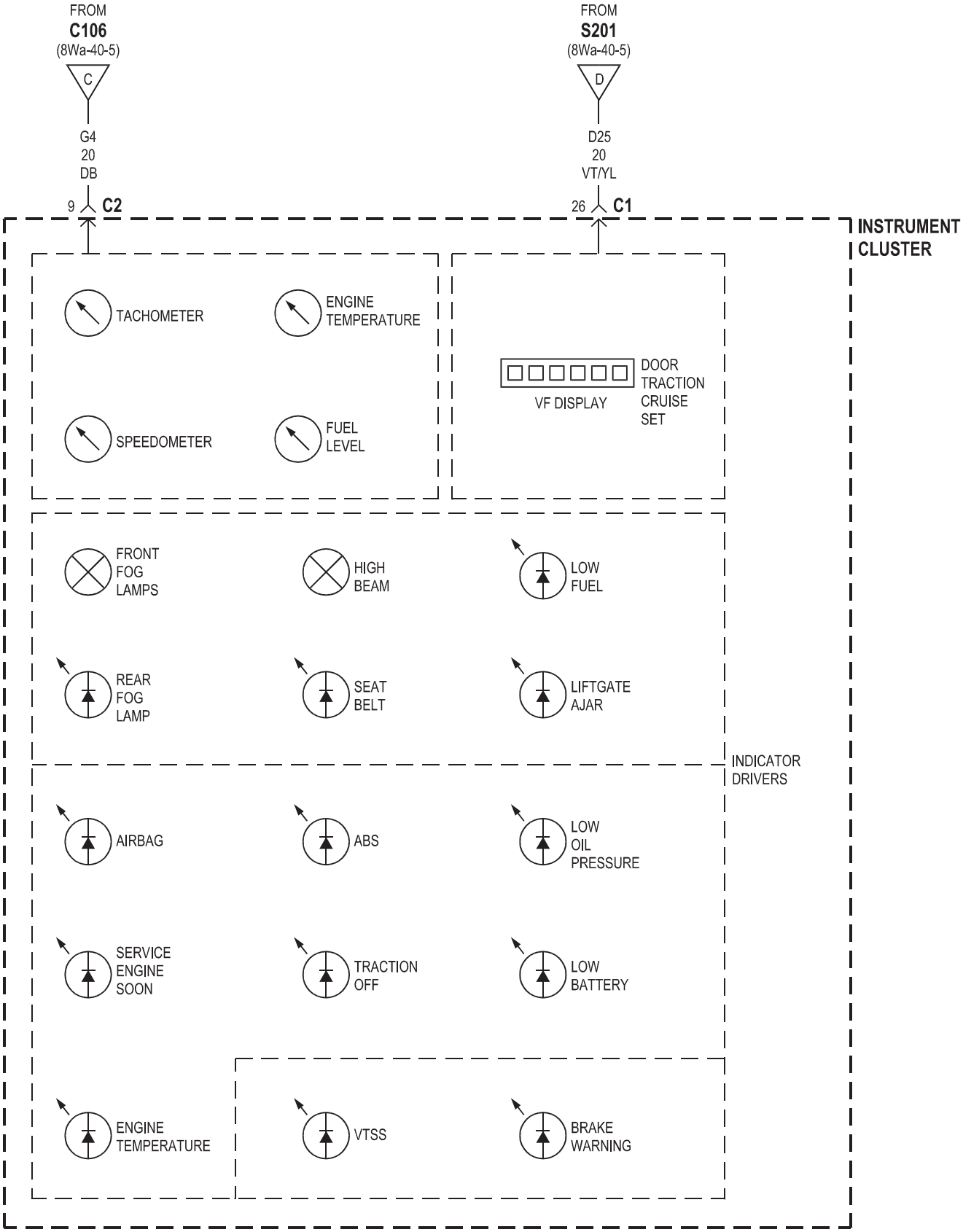
FROM
C106
(8Wa-40-5)
C
G4
20
DB
9
C2
FROM
S201
(8Wa-40-5)
D
D25
20
VT/YL
26
C1
INSTRUMENT CLUSTER
TACHOMETER
ENGINE TEMPERATURE
SPEEDOMETER
FUEL LEVEL
VF DISPLAY
DOOR
TRACTION
CRUISE
SET
FRONT FOG LAMPS
HIGH BEAM
LOW FUEL
REAR FOG LAMP
SEAT BELT
LIFTGATE AJAR
INDICATOR DRIVERS
AIRBAG
ABS
LOW OIL PRESSURE
SERVICE ENGINE SOON
TRACTION OFF
LOW BATTERY
ENGINE TEMPERATURE
VTSS
BRAKE WARNING

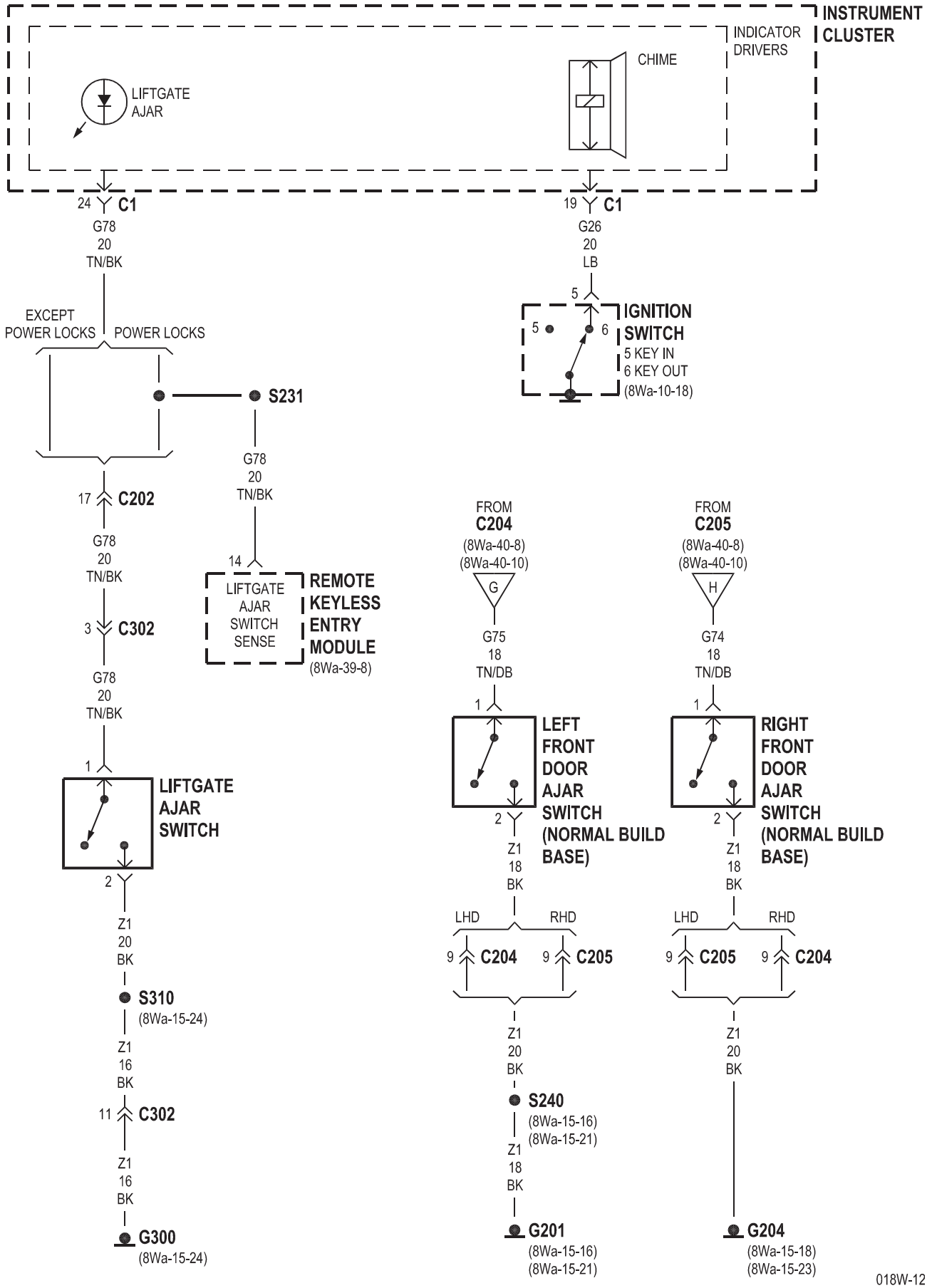
INSTRUMENT CLUSTER
INDICATOR DRIVERS
CHIME
LIFTGATE AJAR
24 C1
G78
20
TN/BK
19 C1
G26
20
LB
5
IGNITION SWITCH
5 KEY IN
6 KEY OUT
(8Wa-10-18)
EXCEPT POWER LOCKS
POWER LOCKS
S231
G78
20
TN/BK
17 C202
G78
20
TN/BK
3 C302
G78
20
TN/BK
14
LIFTGATE AJAR SWITCH SENSE
REMOTE KEYLESS ENTRY MODULE
(8Wa-39-8)
1
LIFTGATE AJAR SWITCH
2
Z1
20
BK
S310
(8Wa-15-24)
Z1
16
BK
11 C302
Z1
16
BK
G300
(8Wa-15-24)
FROM C204
(8Wa-40-8)
(8Wa-40-10)
G
G75
18
TN/DB
1
LEFT FRONT DOOR AJAR SWITCH (NORMAL BUILD BASE)
2
Z1
18
BK
LHD
RHD
9 C204
9 C205
Z1
20
BK
S240
(8Wa-15-16)
(8Wa-15-21)
Z1
18
BK
G201
(8Wa-15-16)
(8Wa-15-21)
FROM C205
(8Wa-40-8)
(8Wa-40-10)
H
G74
18
TN/DB
1
RIGHT FRONT DOOR AJAR SWITCH (NORMAL BUILD BASE)
2
Z1
18
BK
LHD
RHD
9 C205
9 C204
Z1
20
BK
G204
(8Wa-15-18)
(8Wa-15-23)

LHD NORMAL BUILD

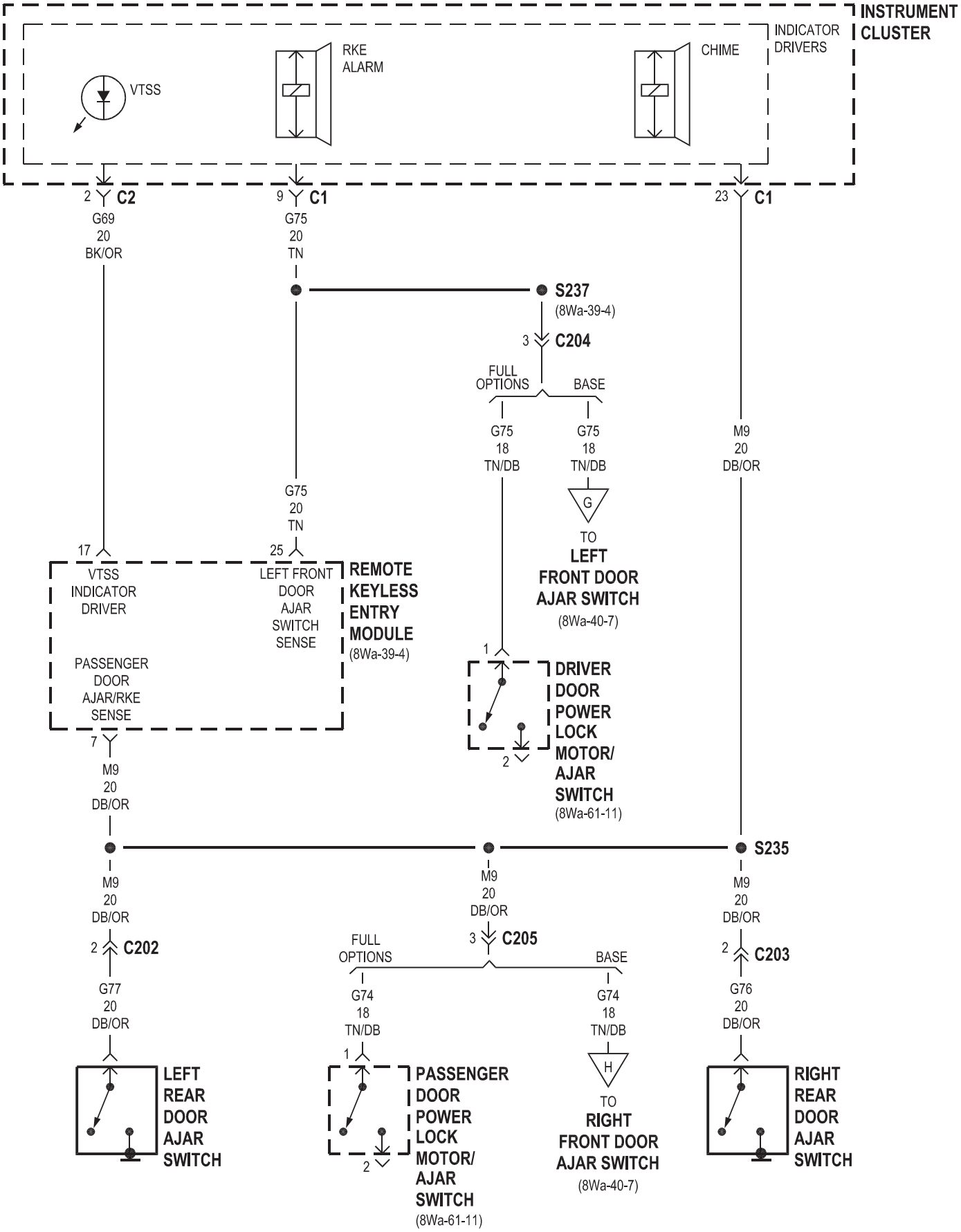

LHD EARLY BUILD

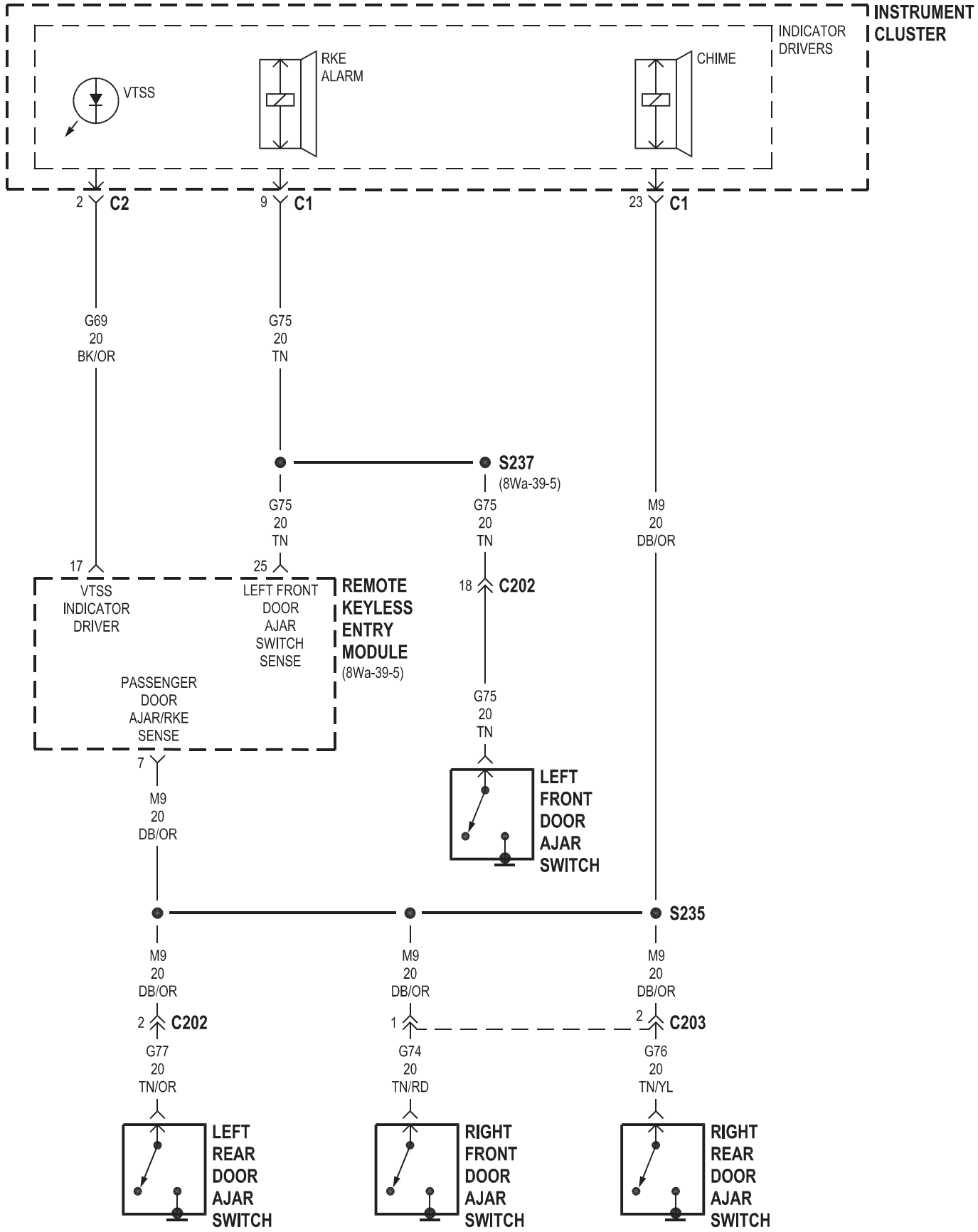

RHD NORMAL BUILD

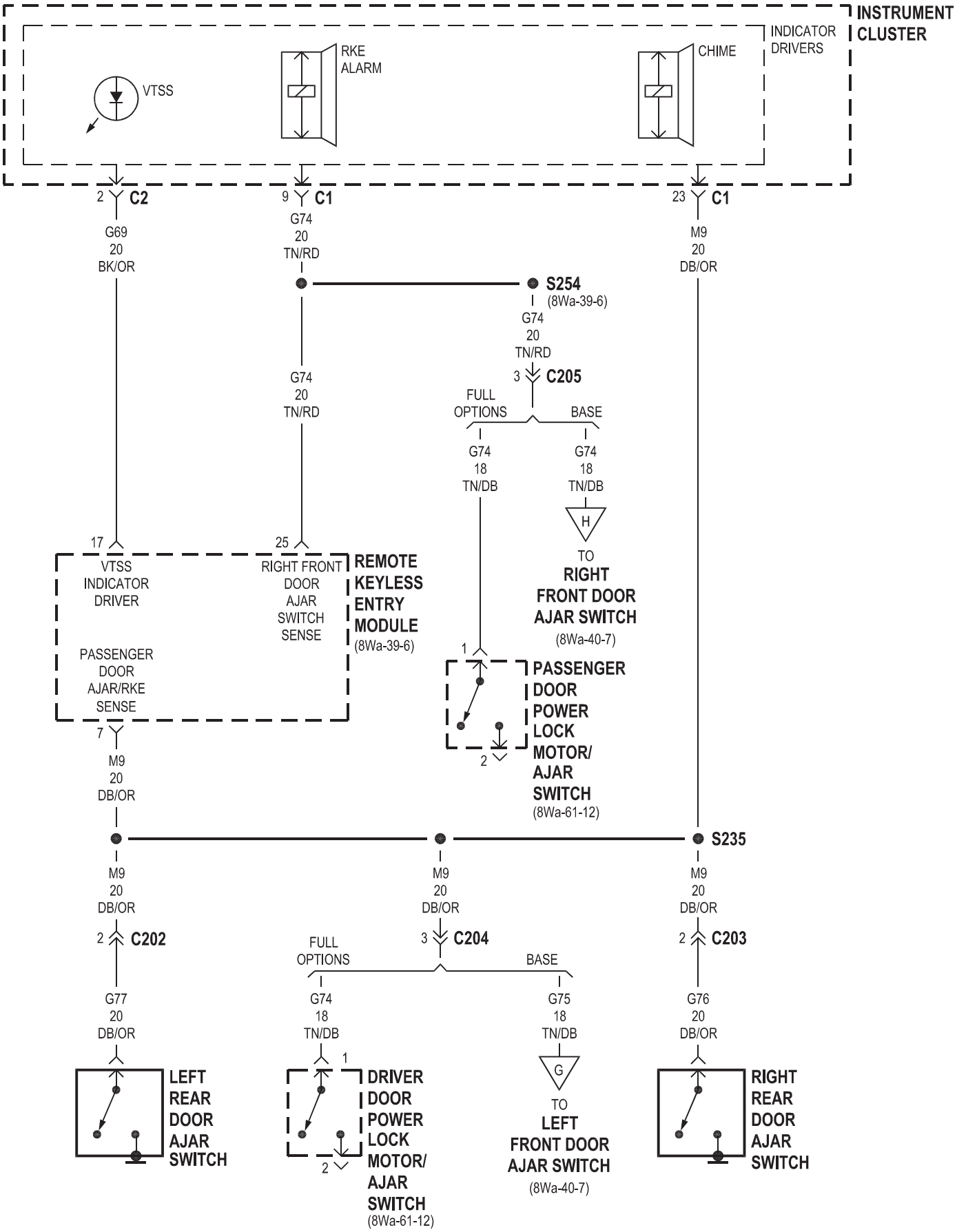

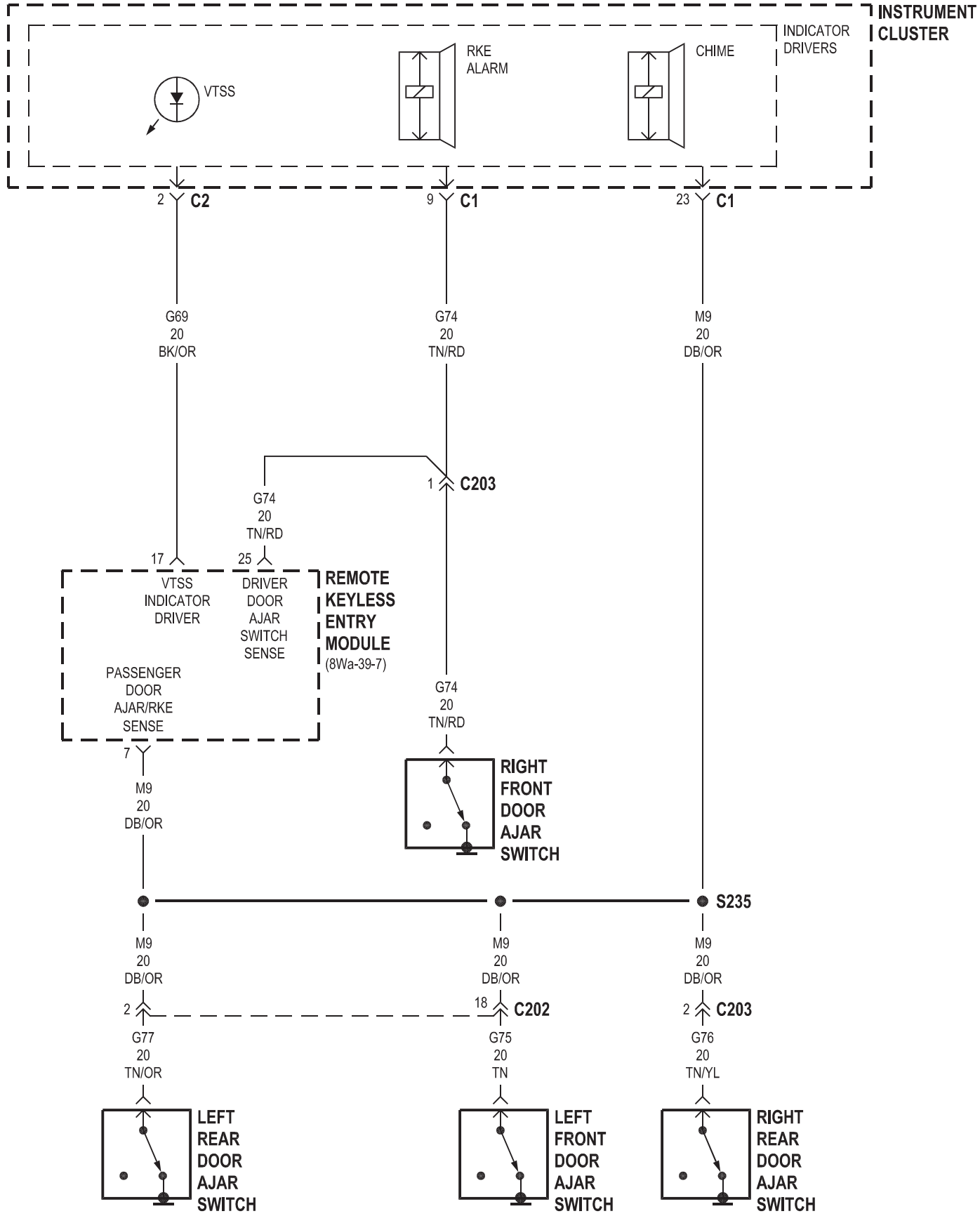
INSTRUMENT CLUSTER
INDICATOR DRIVERS
VTSS
RKE ALARM
CHIME
2 C2
9 C1
23 C1
G69 20 BK/OR
G74 20 TN/RD
M9 20 DB/OR
1 C203
G74 20 TN/RD
17
25
VTSS INDICATOR DRIVER
DRIVER DOOR AJAR SWITCH SENSE
PASSENGER DOOR AJAR/RKE SENSE
REMOTE KEYLESS ENTRY MODULE
(8Wa-39-7)
G74 20 TN/RD
7
M9 20 DB/OR
RIGHT FRONT DOOR AJAR SWITCH
S235
M9 20 DB/OR
M9 20 DB/OR
M9 20 DB/OR
2
18 C202
2 C203
G77 20 TN/OR
G75 20 TN
G76 20 TN/YL
LEFT REAR DOOR AJAR SWITCH
LEFT FRONT DOOR AJAR SWITCH
RIGHT REAR DOOR AJAR SWITCH

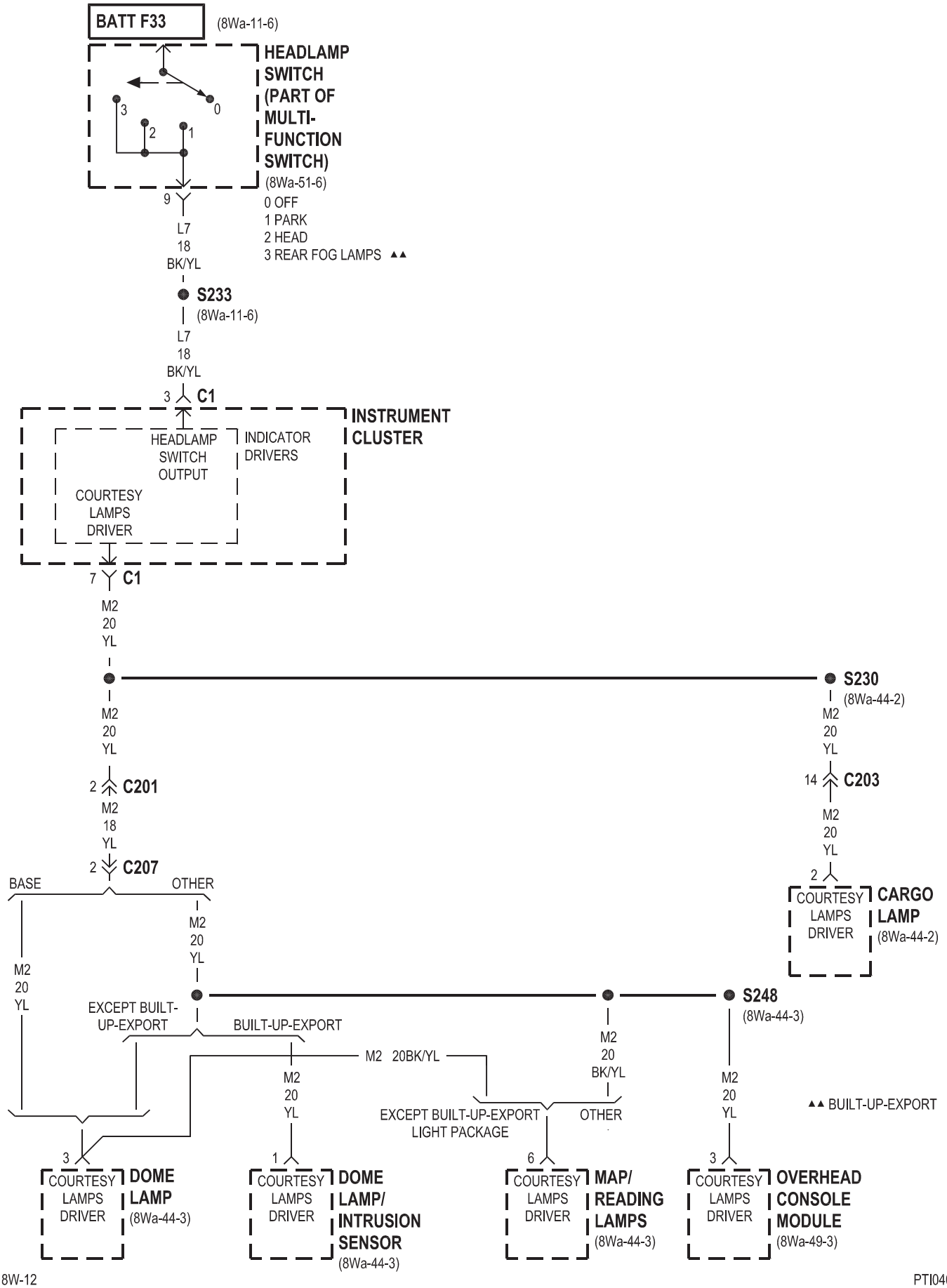
BATT F33
(8Wa-11-6)
HEADLAMP SWITCH (PART OF MULTI-FUNCTION SWITCH)
(8Wa-51-6)
0 OFF
1 PARK
2 HEAD
3 REAR FOG LAMPS ▲▲
9
L7
18
BK/YL
S233
(8Wa-11-6)
L7
18
BK/YL
3
C1
INSTRUMENT CLUSTER
HEADLAMP SWITCH OUTPUT
INDICATOR DRIVERS
COURTESY LAMPS DRIVER
7
C1
M2
20
YL
S230
(8Wa-44-2)
M2
20
YL
2
C201
M2
18
YL
2
C207
M2
20
YL
14
C203
M2
20
YL
2
COURTESY LAMPS DRIVER
CARGO LAMP
(8Wa-44-2)
BASE
OTHER
M2
20
YL
M2
20
YL
EXCEPT BUILT-UP-EXPORT
BUILT-UP-EXPORT
S248
(8Wa-44-3)
M2 20BK/YL
M2
20
BK/YL
M2
20
YL
EXCEPT BUILT-UP-EXPORT LIGHT PACKAGE
OTHER
▲▲ BUILT-UP-EXPORT
3
COURTESY LAMPS DRIVER
DOME LAMP
(8Wa-44-3)
1
COURTESY LAMPS DRIVER
DOME LAMP/ INTRUSION SENSOR
(8Wa-44-3)
6
COURTESY LAMPS DRIVER
MAP/ READING LAMPS
(8Wa-44-3)
3
COURTESY LAMPS DRIVER
OVERHEAD CONSOLE MODULE
(8Wa-49-3)

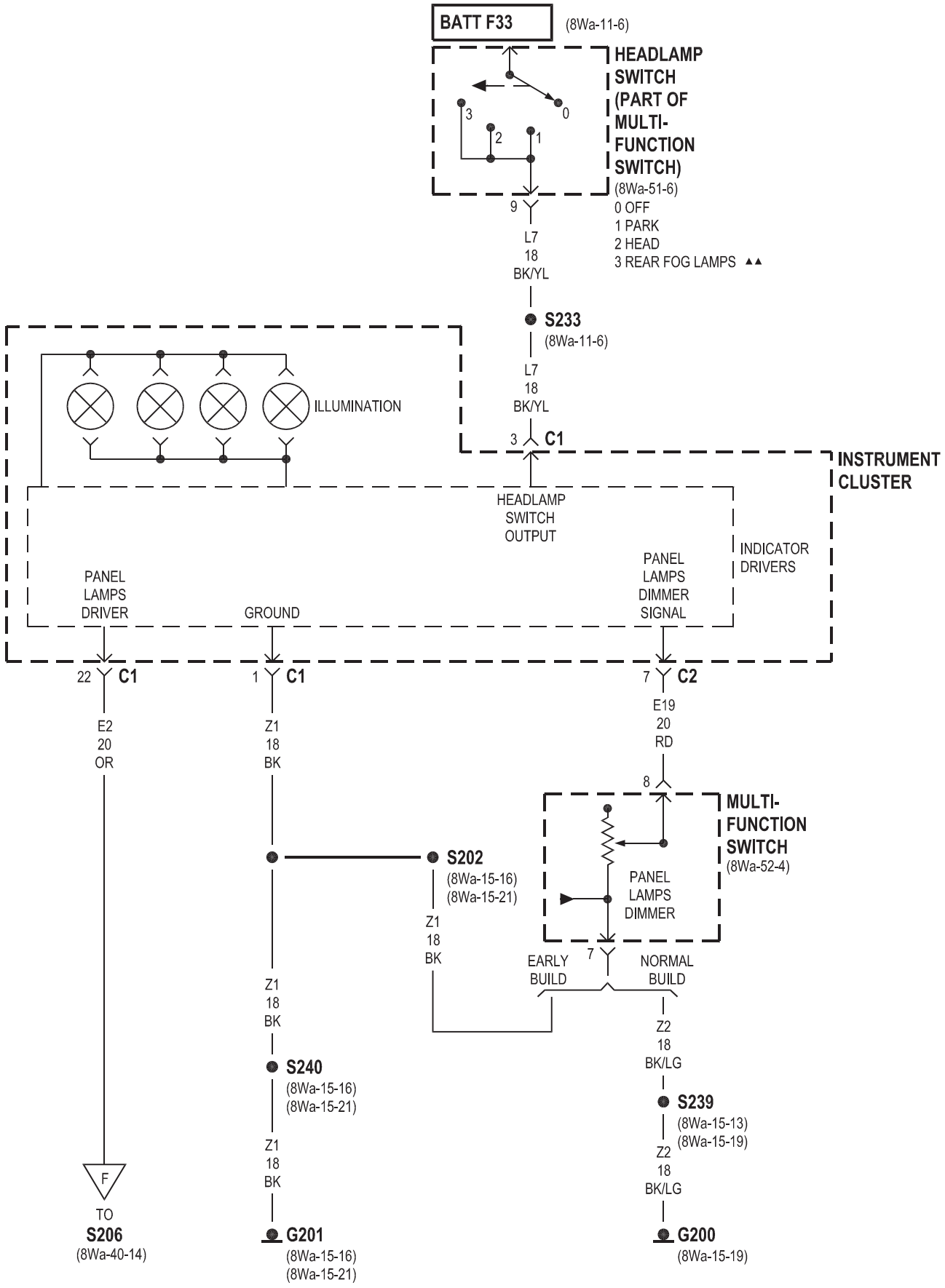

▲▲ BUILT-UP-EXPORT

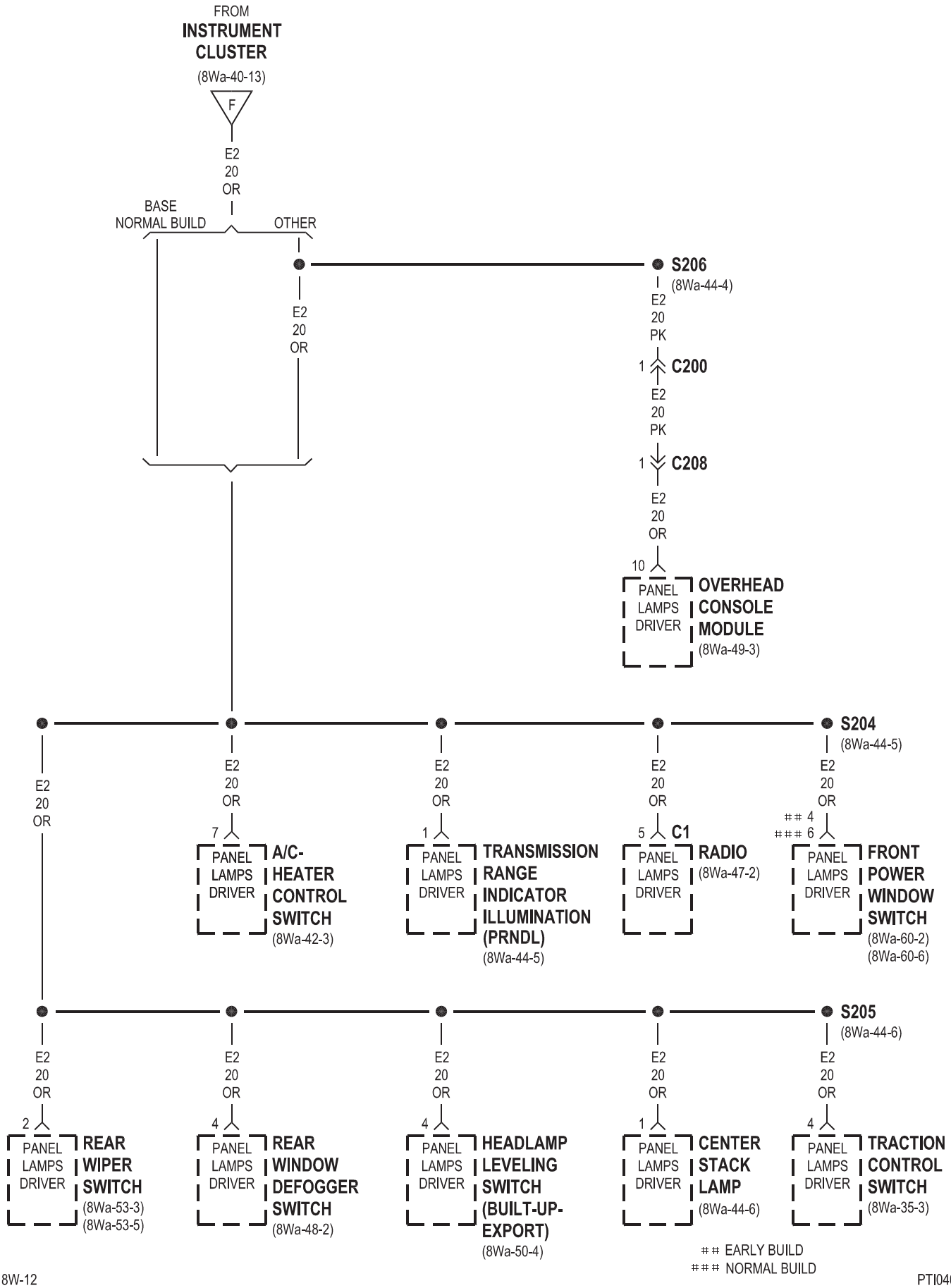
FROM
INSTRUMENT CLUSTER
(8Wa-40-13)
F
E2
20
OR
BASE
NORMAL BUILD
OTHER
S206
(8Wa-44-4)
E2
20
PK
1
C200
E2
20
PK
1
C208
E2
20
OR
10
PANEL LAMPS DRIVER
OVERHEAD CONSOLE MODULE
(8Wa-49-3)
S204
(8Wa-44-5)
7
A/C-HEATER CONTROL SWITCH
(8Wa-42-3)
1
TRANSMISSION RANGE INDICATOR ILLUMINATION (PRNDL)
(8Wa-44-5)
5
C1
RADIO
(8Wa-47-2)
4
6
FRONT POWER WINDOW SWITCH
(8Wa-60-2)
(8Wa-60-6)
S205
(8Wa-44-6)
2
REAR WIPER SWITCH
(8Wa-53-3)
(8Wa-53-5)
4
REAR WINDOW DEFOGGER SWITCH
(8Wa-48-2)
4
HEADLAMP LEVELING SWITCH (BUILT-UP-EXPORT)
(8Wa-50-4)
1
CENTER STACK LAMP
(8Wa-44-6)
4
TRACTION CONTROL SWITCH
(8Wa-35-3)
EARLY BUILD
NORMAL BUILD

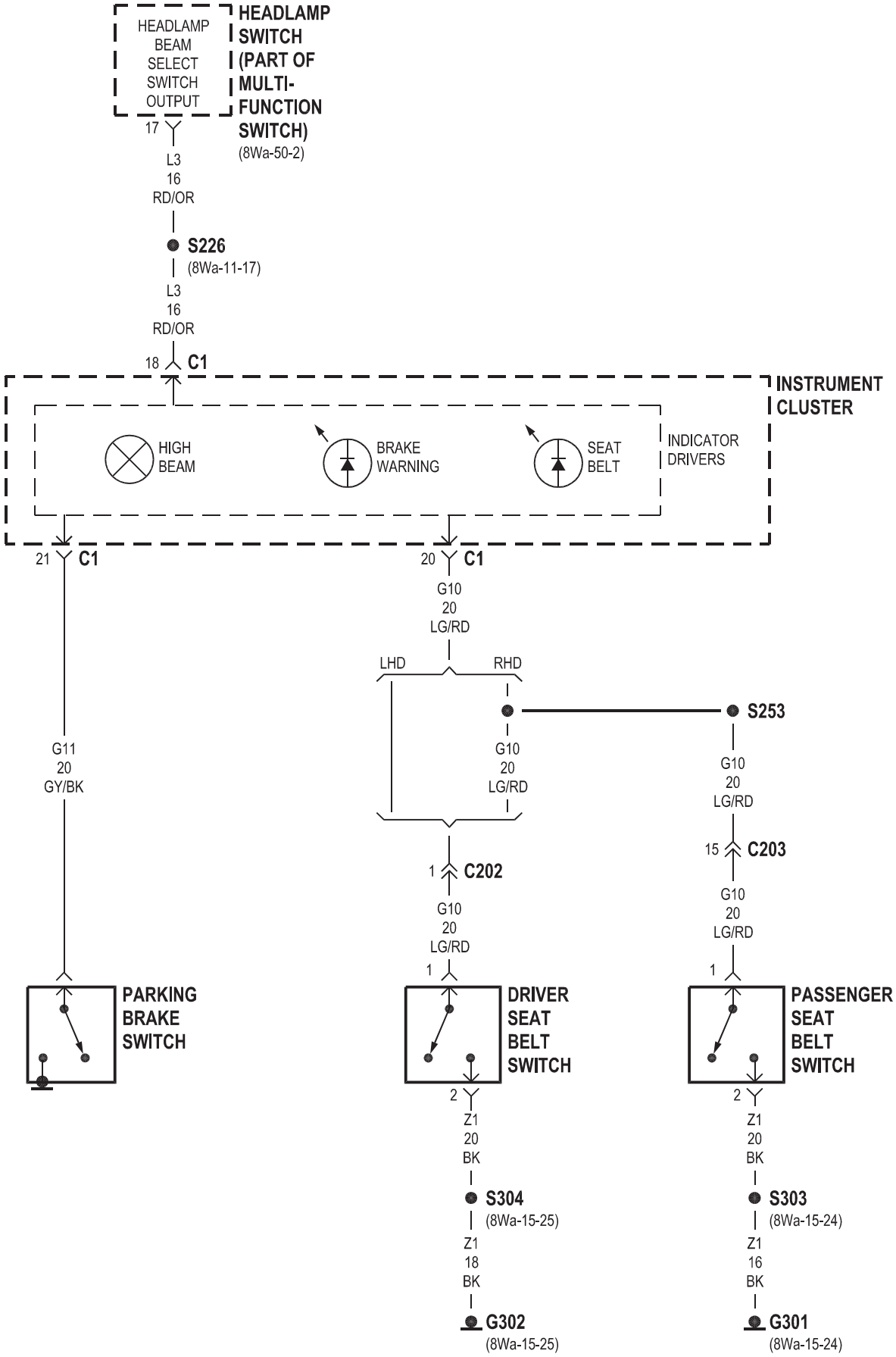
HEADLAMP BEAM SELECT SWITCH OUTPUT
HEADLAMP SWITCH (PART OF MULTI-FUNCTION SWITCH)
(8Wa-50-2)
17
L3
16
RD/OR
S226
(8Wa-11-17)
L3
16
RD/OR
18
C1
INSTRUMENT CLUSTER
HIGH BEAM
BRAKE WARNING
SEAT BELT
INDICATOR DRIVERS
21
C1
20
C1
G10
20
LG/RD
LHD
RHD
S253
G11
20
GY/BK
G10
20
LG/RD
G10
20
LG/RD
15
C203
1
C202
G10
20
LG/RD
G10
20
LG/RD
1
1
PARKING BRAKE SWITCH
DRIVER SEAT BELT SWITCH
PASSENGER SEAT BELT SWITCH
2
2
Z1
20
BK
Z1
20
BK
S304
(8Wa-15-25)
S303
(8Wa-15-24)
Z1
18
BK
Z1
16
BK
G302
(8Wa-15-25)
G301
(8Wa-15-24)

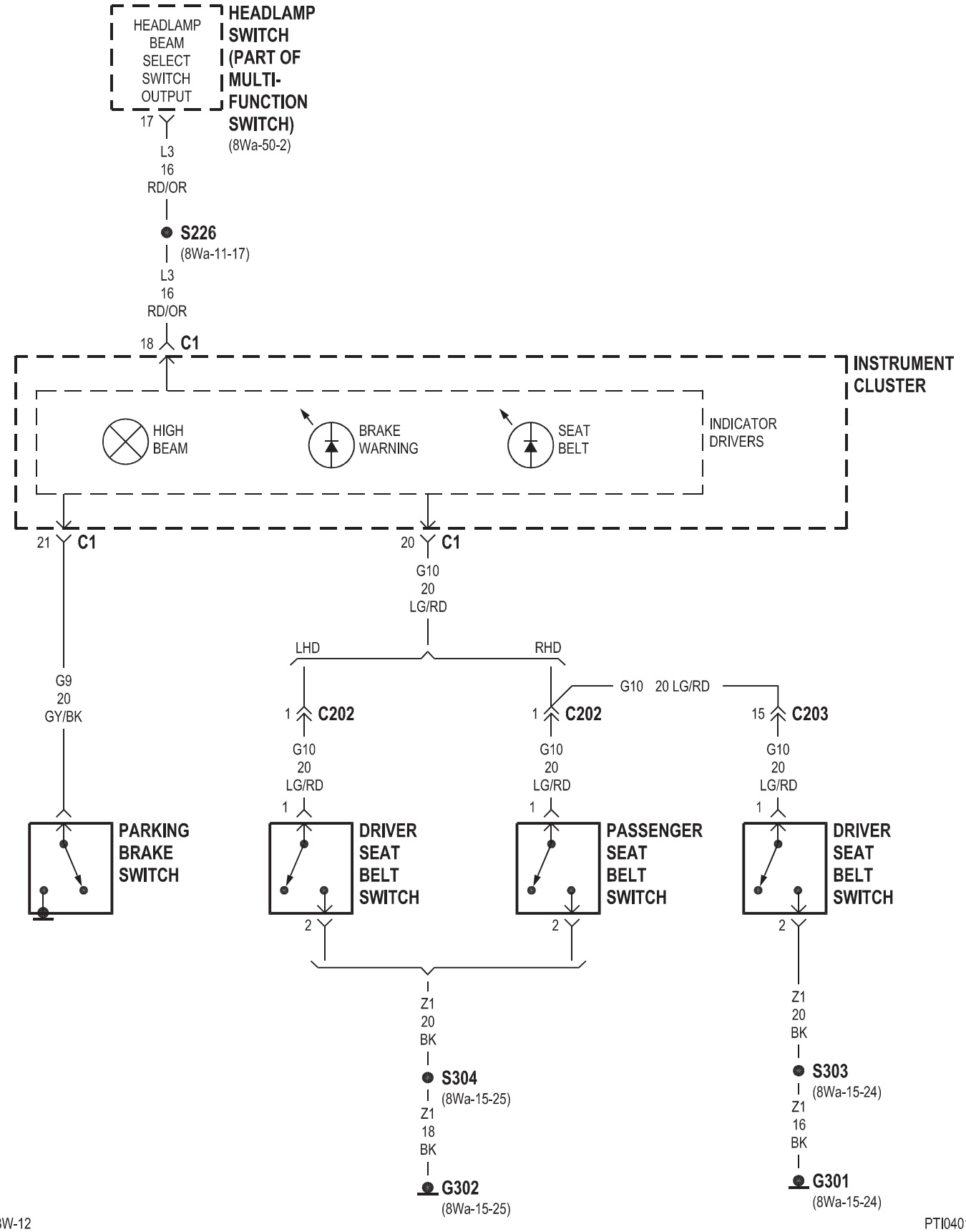
HEADLAMP BEAM SELECT SWITCH OUTPUT
HEADLAMP SWITCH (PART OF MULTI-FUNCTION SWITCH)
(8Wa-50-2)
17
L3
16
RD/OR
S226
(8Wa-11-17)
L3
16
RD/OR
18
C1
INSTRUMENT CLUSTER
HIGH BEAM
BRAKE WARNING
SEAT BELT
INDICATOR DRIVERS
21
C1
20
C1
G10
20
LG/RD
LHD
RHD
G10 20 LG/RD
G9
20
GY/BK
1
C202
1
C202
15
C203
G10
20
LG/RD
G10
20
LG/RD
G10
20
LG/RD
1
1
1
PARKING BRAKE SWITCH
DRIVER SEAT BELT SWITCH
PASSENGER SEAT BELT SWITCH
DRIVER SEAT BELT SWITCH
2
2
2
Z1
20
BK
S304
(8Wa-15-25)
Z1
18
BK
G302
(8Wa-15-25)
Z1
20
BK
S303
(8Wa-15-24)
Z1
16
BK
G301
(8Wa-15-24)

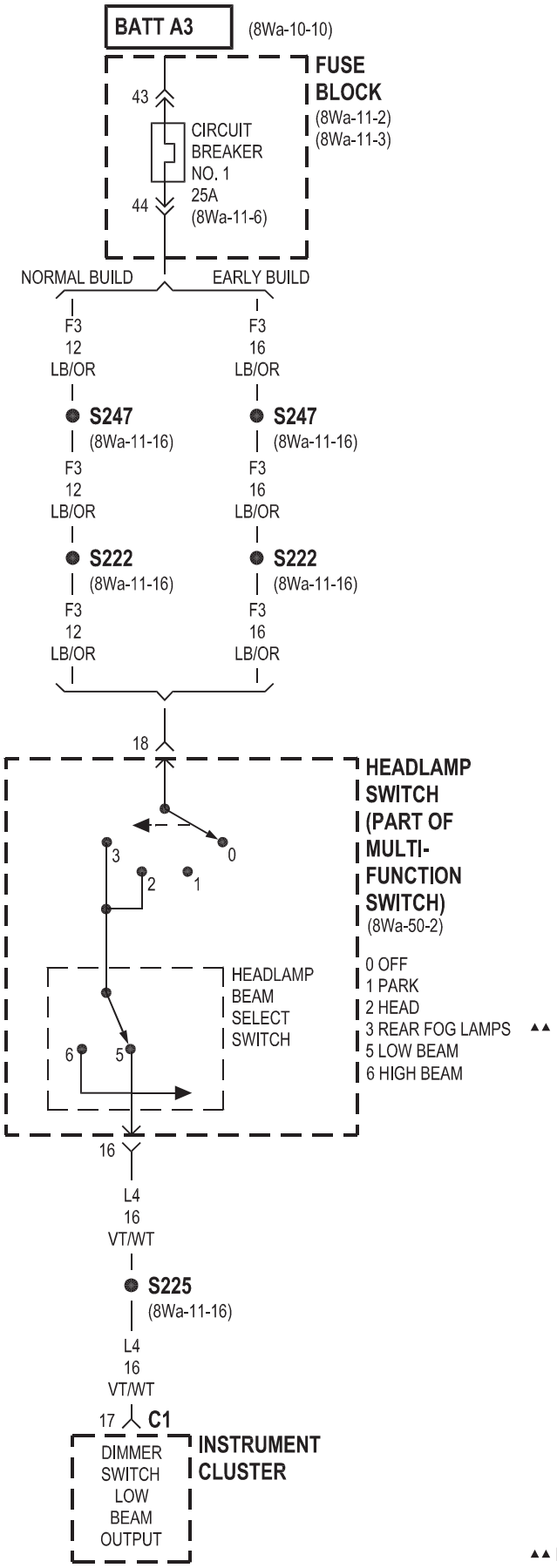

▲▲ BUILT-UP-EXPORT

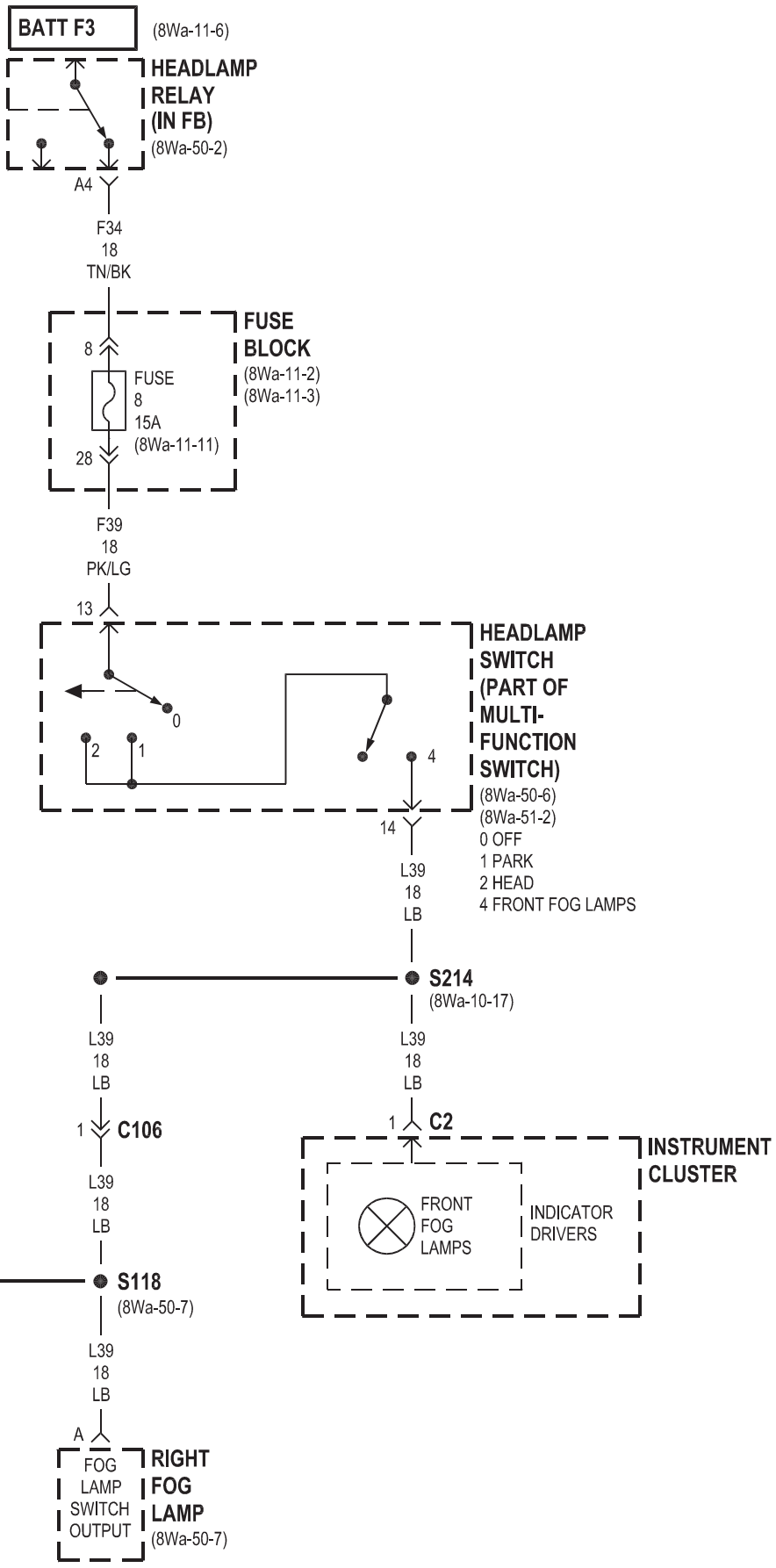
BATT F3
(8Wa-11-6)
HEADLAMP RELAY (IN FB)
(8Wa-50-2)
A4
F34
18
TN/BK
FUSE BLOCK
(8Wa-11-2)
(8Wa-11-3)
8
FUSE
8
15A
(8Wa-11-11)
28
F39
18
PK/LG
13
HEADLAMP SWITCH (PART OF MULTI-FUNCTION SWITCH)
(8Wa-50-6)
(8Wa-51-2)
0 OFF
1 PARK
2 HEAD
4 FRONT FOG LAMPS
0
2
1
4
14
L39
18
LB
S214
(8Wa-10-17)
L39
18
LB
L39
18
LB
1
C106
1
C2
INSTRUMENT CLUSTER
FRONT FOG LAMPS
INDICATOR DRIVERS
L39
18
LB
S118
(8Wa-50-7)
L39
18
LB
L39
18
LB
A
FOG LAMP SWITCH OUTPUT
LEFT FOG LAMP
(8Wa-50-7)
A
FOG LAMP SWITCH OUTPUT
RIGHT FOG LAMP
(8Wa-50-7)

BUILT-UP-EXPORT

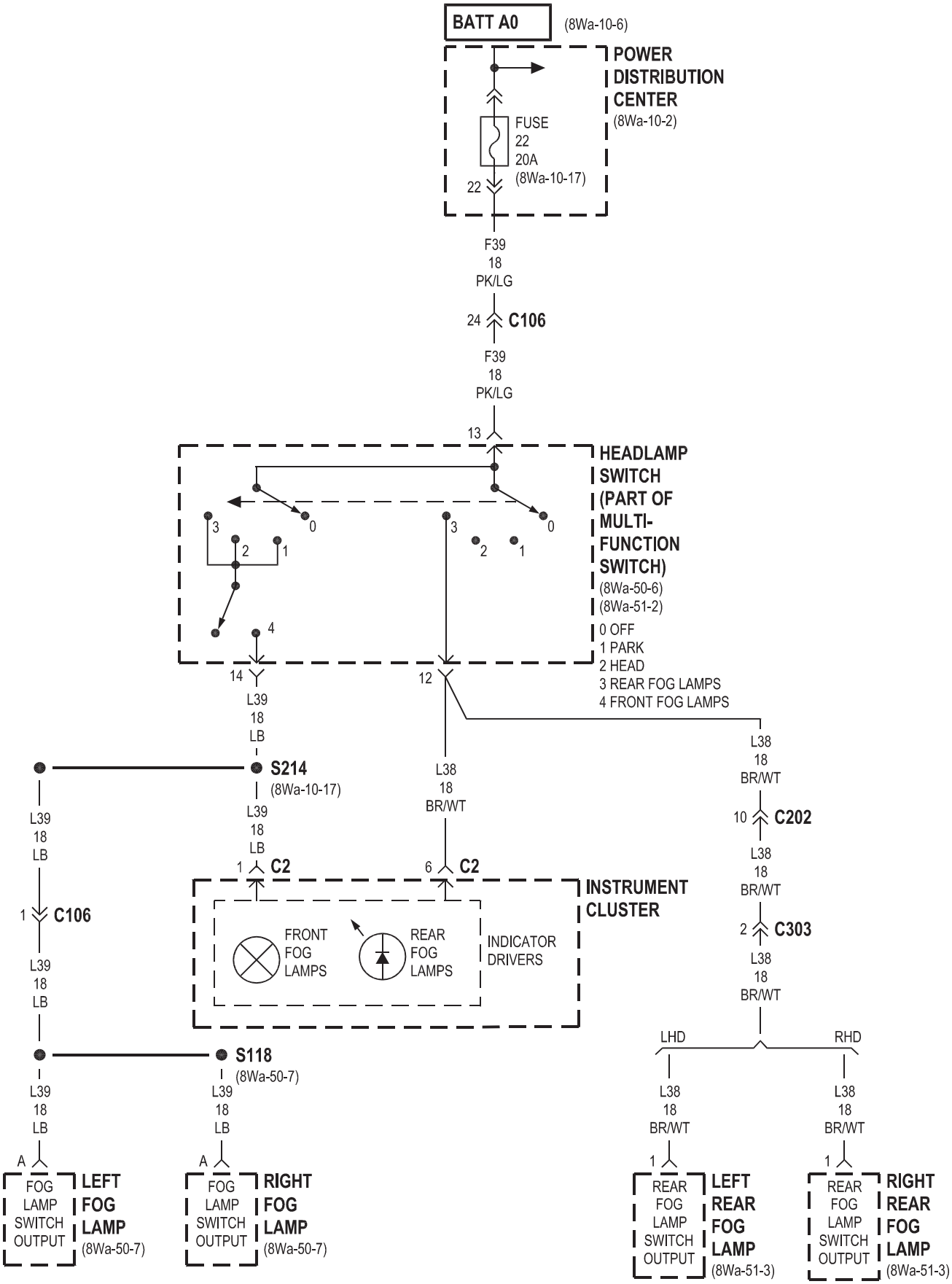

2001 PT CRUISER

8W-41 HORN/CIGAR LIGHTER/POWER OUTLET

Component	Page
Cigar Lighter	8Wa-41-3
Clockspring	8Wa-41-2
Fuse 14 (PDC)	8Wa-41-2
Fuse 20 (PDC)	8Wa-41-3
G104	8Wa-41-2
G203	8Wa-41-3
G301	8Wa-41-3
High Note Horn	8Wa-41-2
Horn Relay	8Wa-41-2
Horn Switch	8Wa-41-2
Ignition Switch	8Wa-41-3
Low Note Horn	8Wa-41-2
Power Distribution Center	8Wa-41-2, 3
Power Outlet	8Wa-41-3
Remote Keyless Entry Module	8Wa-41-2

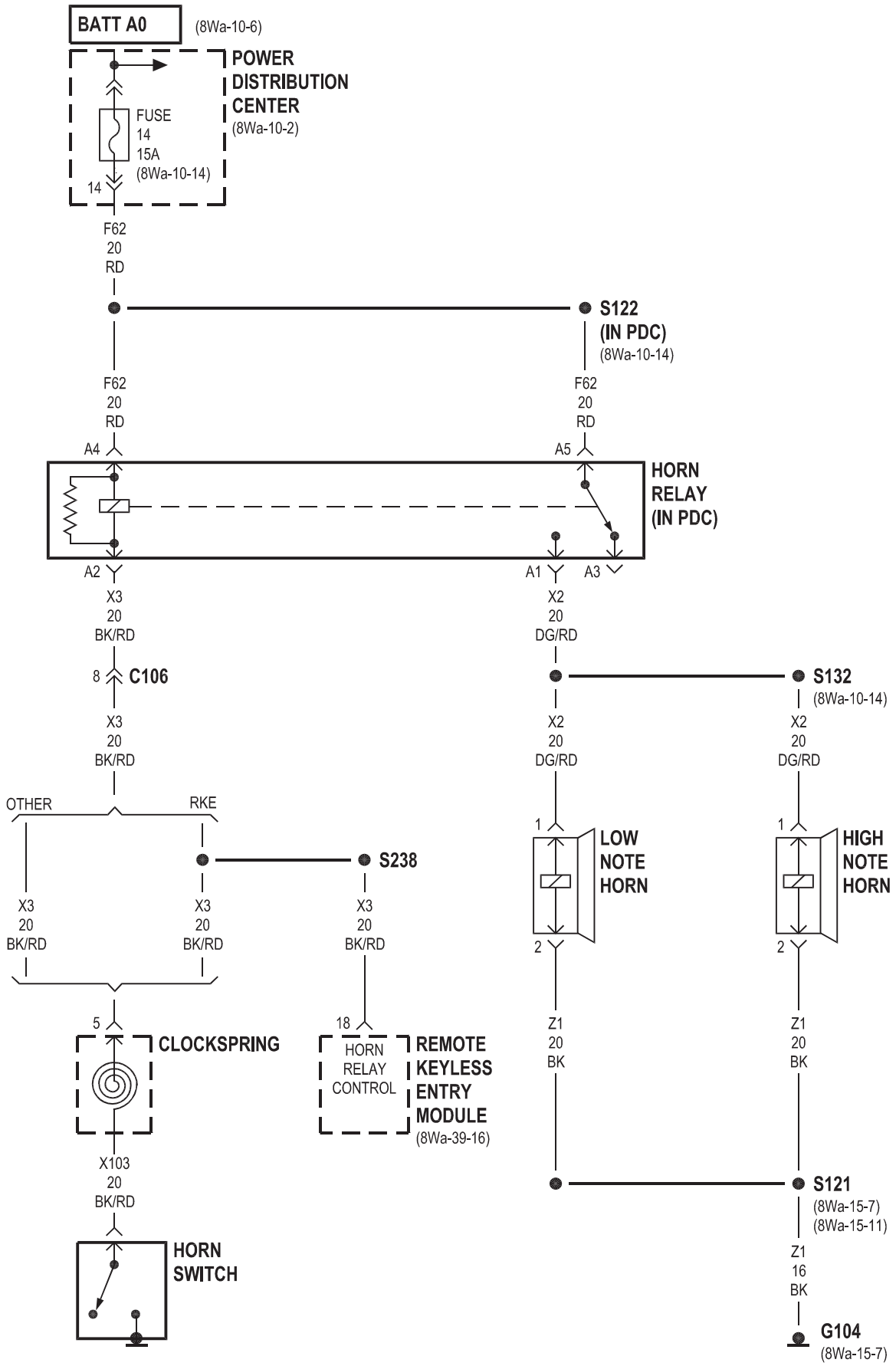
BATT A0
(8Wa-10-6)
POWER DISTRIBUTION CENTER
(8Wa-10-2)
FUSE 14 15A
(8Wa-10-14)
14
F62 20 RD
S122 (IN PDC)
(8Wa-10-14)
F62 20 RD
F62 20 RD
A4
A5
HORN RELAY (IN PDC)
A2
A1
A3
X3 20 BK/RD
X2 20 DG/RD
8
C106
S132
(8Wa-10-14)
X3 20 BK/RD
X2 20 DG/RD
X2 20 DG/RD
OTHER
RKE
S238
1
LOW NOTE HORN
1
HIGH NOTE HORN
X3 20 BK/RD
X3 20 BK/RD
X3 20 BK/RD
2
2
5
CLOCKSPRING
18
HORN RELAY CONTROL
REMOTE KEYLESS ENTRY MODULE
(8Wa-39-16)
Z1 20 BK
Z1 20 BK
X103 20 BK/RD
S121
(8Wa-15-7)
(8Wa-15-11)
HORN SWITCH
Z1 16 BK
G104
(8Wa-15-7)

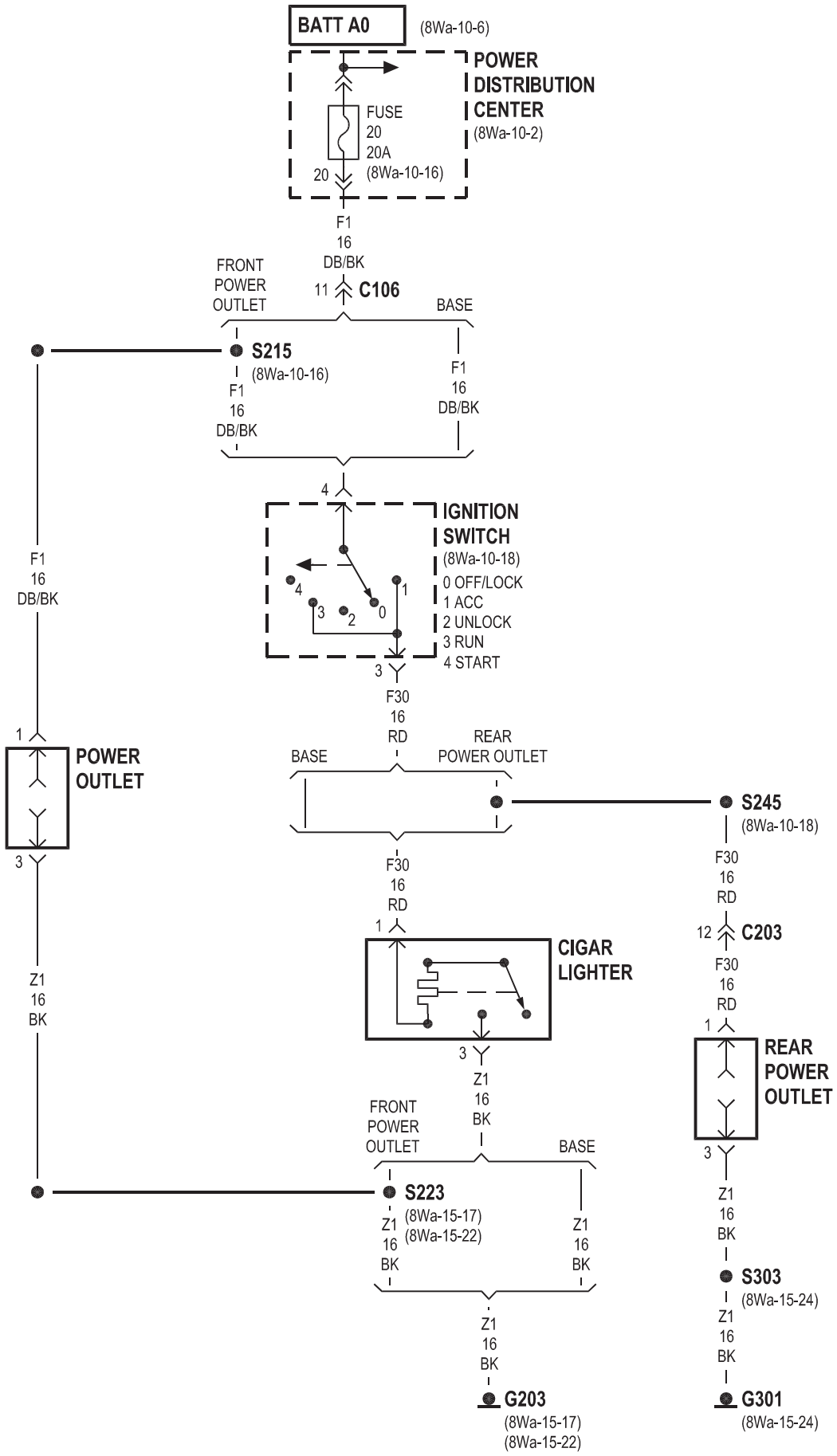
BATT A0
(8Wa-10-6)
POWER DISTRIBUTION CENTER
(8Wa-10-2)
FUSE 20 20A
(8Wa-10-16)
20
F1 16 DB/BK
FRONT POWER OUTLET
11
C106
BASE
S215
(8Wa-10-16)
F1 16 DB/BK
F1 16 DB/BK
4
IGNITION SWITCH
(8Wa-10-18)
0 OFF/LOCK
1 ACC
2 UNLOCK
3 RUN
4 START
3
F30 16 RD
F1 16 DB/BK
1
POWER OUTLET
3
BASE
REAR POWER OUTLET
S245
(8Wa-10-18)
F30 16 RD
F30 16 RD
1
CIGAR LIGHTER
3
Z1 16 BK
12
C203
F30 16 RD
1
REAR POWER OUTLET
3
Z1 16 BK
FRONT POWER OUTLET
BASE
S223
(8Wa-15-17)
(8Wa-15-22)
Z1 16 BK
Z1 16 BK
Z1 16 BK
Z1 16 BK
S303
(8Wa-15-24)
Z1 16 BK
G203
(8Wa-15-17)
(8Wa-15-22)
G301
(8Wa-15-24)

2001 PT CRUISER

8W-42 AIR CONDITIONING-HEATER

Component	Page
A/C Compressor Clutch	8Wa-42-2
A/C Compressor Clutch Relay	8Wa-42-2
A/C Low Pressure Switch	8Wa-42-2
A/C Pressure Transducer	8Wa-42-2
A/C- Heater Control Switch	8Wa-42-2, 3
Blower Motor	8Wa-42-3
Blower Motor Resistor Block	8Wa-42-3
Diode	8Wa-42-2
Fuse 5 (PDC)	8Wa-42-4
Fuse 7 (FB)	8Wa-42-3
Fuse 10 (FB)	8Wa-42-3
Fuse 11 (PDC)	8Wa-42-2
Fuse 12 (FB)	8Wa-42-2, 4
Fuse Block	8Wa-42-2, 3, 4
G103	8Wa-42-2
G105	8Wa-42-4
G203	8Wa-42-3
High Speed Radiator Fan Relay	8Wa-42-4
Instrument Cluster	8Wa-42-3
Low Speed Radiator Fan Relay	8Wa-42-4
Power Distribution Center	8Wa-42-2, 4
Powertrain Control Module	8Wa-42-2, 4
Radiator Fan Motor	8Wa-42-4

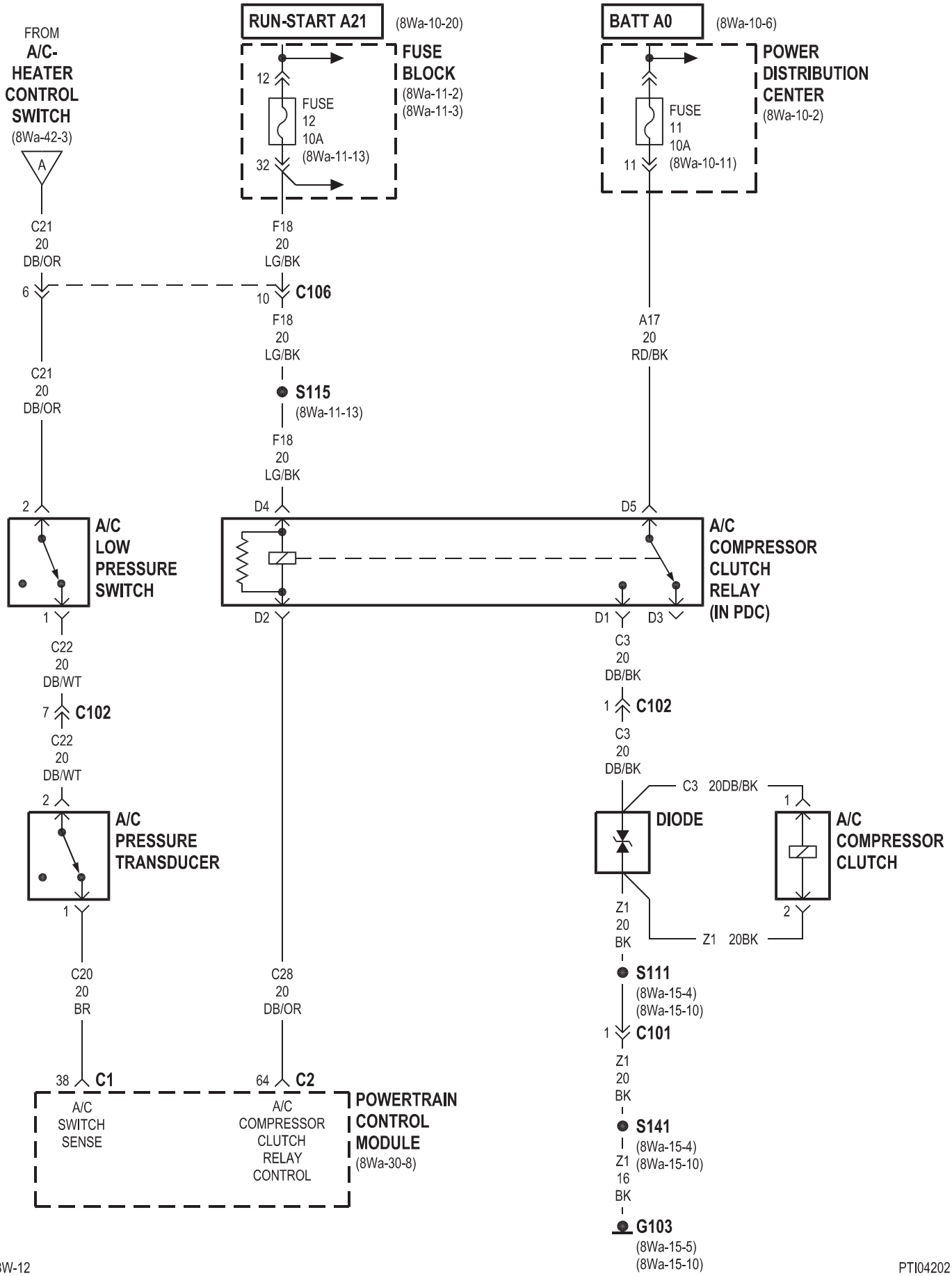
FROM
A/C-
HEATER
CONTROL
SWITCH
(8Wa-42-3)
A
C21
20
DB/OR
6
RUN-START A21
(8Wa-10-20)
FUSE
BLOCK
(8Wa-11-2)
(8Wa-11-3)
12
FUSE
12
10A
(8Wa-11-13)
32
F18
20
LG/BK
10
C106
F18
20
LG/BK
S115
(8Wa-11-13)
F18
20
LG/BK
BATT A0
(8Wa-10-6)
POWER
DISTRIBUTION
CENTER
(8Wa-10-2)
FUSE
11
10A
(8Wa-10-11)
11
A17
20
RD/BK
C21
20
DB/OR
2
A/C
LOW
PRESSURE
SWITCH
1
C22
20
DB/WT
7
C102
C22
20
DB/WT
2
A/C
PRESSURE
TRANSDUCER
1
C20
20
BR
38
C1
A/C
SWITCH
SENSE
D4
D2
D5
A/C
COMPRESSOR
CLUTCH
RELAY
(IN PDC)
D1
D3
C3
20
DB/BK
1
C102
C3
20
DB/BK
C3 20DB/BK
DIODE
1
A/C
COMPRESSOR
CLUTCH
2
Z1
20
BK
Z1 20BK
S111
(8Wa-15-4)
(8Wa-15-10)
1
C101
Z1
20
BK
S141
(8Wa-15-4)
(8Wa-15-10)
Z1
16
BK
G103
(8Wa-15-5)
(8Wa-15-10)
C28
20
DB/OR
64
C2
A/C
COMPRESSOR
CLUTCH
RELAY
CONTROL
POWERTRAIN
CONTROL
MODULE
(8Wa-30-8)

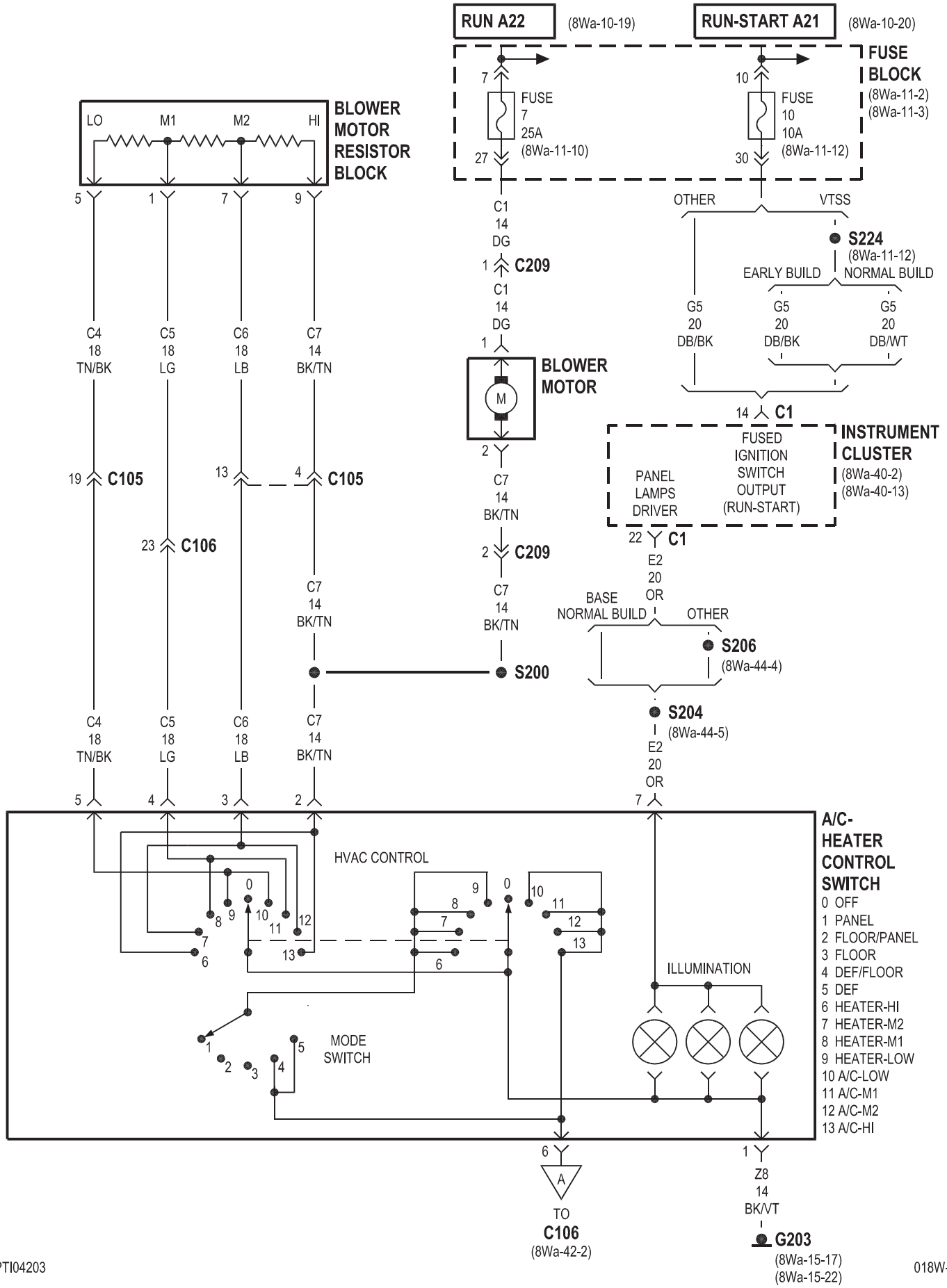
RUN A22
(8Wa-10-19)
RUN-START A21
(8Wa-10-20)
FUSE BLOCK
(8Wa-11-2)
(8Wa-11-3)
FUSE 7 25A
(8Wa-11-10)
FUSE 10 10A
(8Wa-11-12)
BLOWER MOTOR RESISTOR BLOCK
LO
M1
M2
HI
C1 14 DG
C209
C1 14 DG
BLOWER MOTOR
C7 14 BK/TN
C209
C7 14 BK/TN
S200
OTHER
VTSS
S224
(8Wa-11-12)
EARLY BUILD
NORMAL BUILD
G5 20 DB/BK
G5 20 DB/BK
G5 20 DB/WT
C1
INSTRUMENT CLUSTER
(8Wa-40-2)
(8Wa-40-13)
FUSED IGNITION SWITCH OUTPUT (RUN-START)
PANEL LAMPS DRIVER
C1
E2 20 OR
BASE NORMAL BUILD
OTHER
S206
(8Wa-44-4)
S204
(8Wa-44-5)
E2 20 OR
C4 18 TN/BK
C5 18 LG
C6 18 LB
C7 14 BK/TN
C105
C106
A/C-HEATER CONTROL SWITCH
0 OFF
1 PANEL
2 FLOOR/PANEL
3 FLOOR
4 DEF/FLOOR
5 DEF
6 HEATER-HI
7 HEATER-M2
8 HEATER-M1
9 HEATER-LOW
10 A/C-LOW
11 A/C-M1
12 A/C-M2
13 A/C-HI
HVAC CONTROL
ILLUMINATION
MODE SWITCH
TO C106
(8Wa-42-2)
Z8 14 BK/VT
G203
(8Wa-15-17)
(8Wa-15-22)

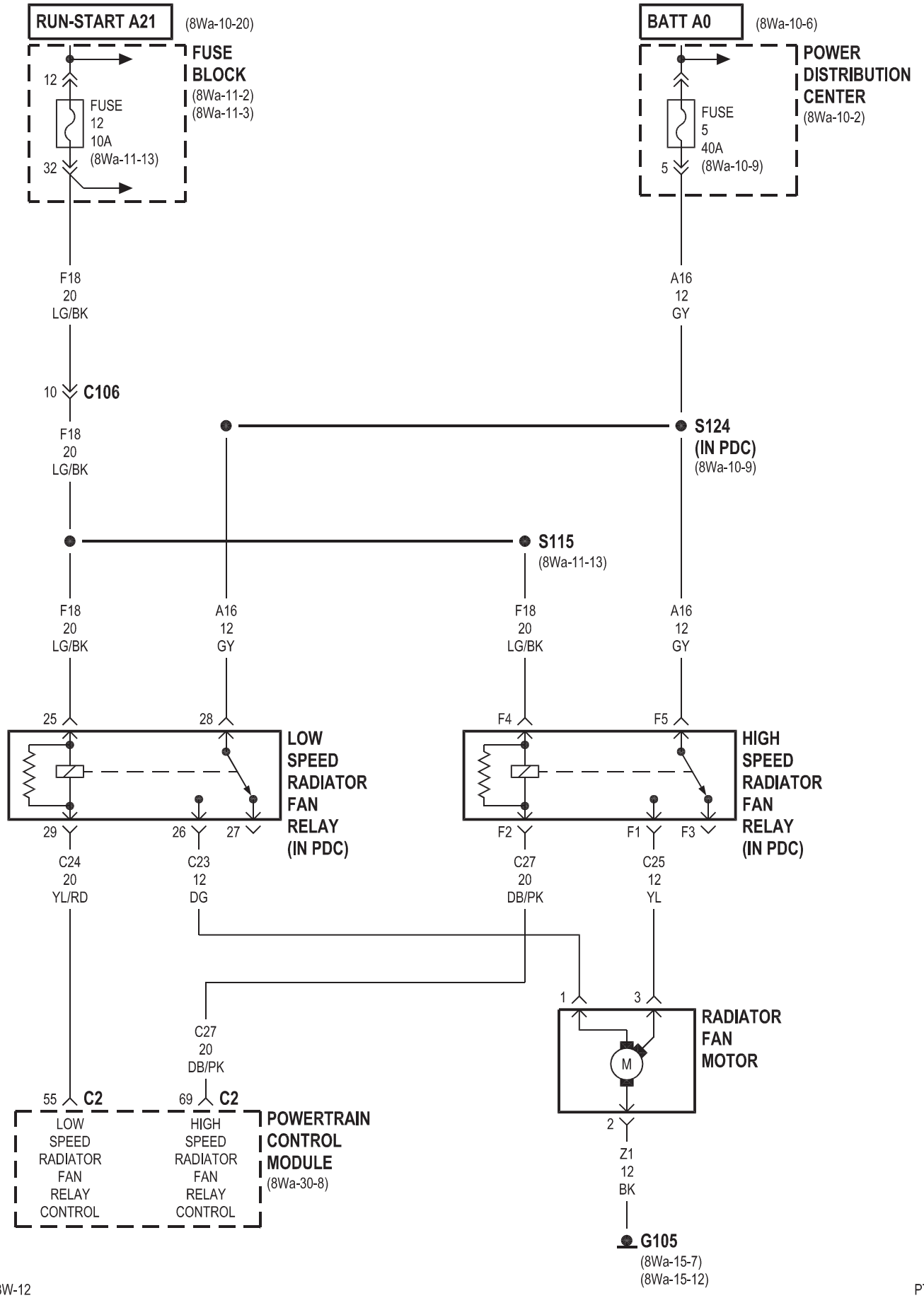
RUN-START A21
(8Wa-10-20)
FUSE BLOCK
(8Wa-11-2)
(8Wa-11-3)
12
FUSE 12 10A
(8Wa-11-13)
32
BATT A0
(8Wa-10-6)
POWER DISTRIBUTION CENTER
(8Wa-10-2)
FUSE 5 40A
(8Wa-10-9)
5
F18 20 LG/BK
A16 12 GY
10
C106
S124
(IN PDC)
(8Wa-10-9)
S115
(8Wa-11-13)
25
28
F4
F5
LOW SPEED RADIATOR FAN RELAY (IN PDC)
HIGH SPEED RADIATOR FAN RELAY (IN PDC)
29
26
27
F2
F1
F3
C24 20 YL/RD
C23 12 DG
C27 20 DB/PK
C25 12 YL
1
3
RADIATOR FAN MOTOR
M
2
Z1 12 BK
G105
(8Wa-15-7)
(8Wa-15-12)
55
C2
69
C2
LOW SPEED RADIATOR FAN RELAY CONTROL
HIGH SPEED RADIATOR FAN RELAY CONTROL
POWERTRAIN CONTROL MODULE
(8Wa-30-8)

8W-43 OCCUPANT RESTRAINT SYSTEM

Component	Page
Clockspring	8Wa-43-3
Data Link Connector	8Wa-43-2, 4
Driver Airbag Module	8Wa-43-3
Fuse 5 (FB)	8Wa-43-2
Fuse 9 (FB)	8Wa-43-2, 4
Fuse Block	8Wa-43-2, 4
G202	8Wa-43-2
G303	8Wa-43-4
G304	8Wa-43-4
Instrument Cluster	8Wa-43-2
Left Seat Airbag	8Wa-43-4
Left Seat Belt Tensioner	8Wa-43-3
Left Side Impact Airbag Control Module	8Wa-43-4
Occupant Restraint Controller	8Wa-43-2, 3
Passenger Airbag	8Wa-43-3
Right Seat Airbag	8Wa-43-4
Right Seat Belt Tensioner	8Wa-43-3
Right Side Impact Airbag Control Module	8Wa-43-4

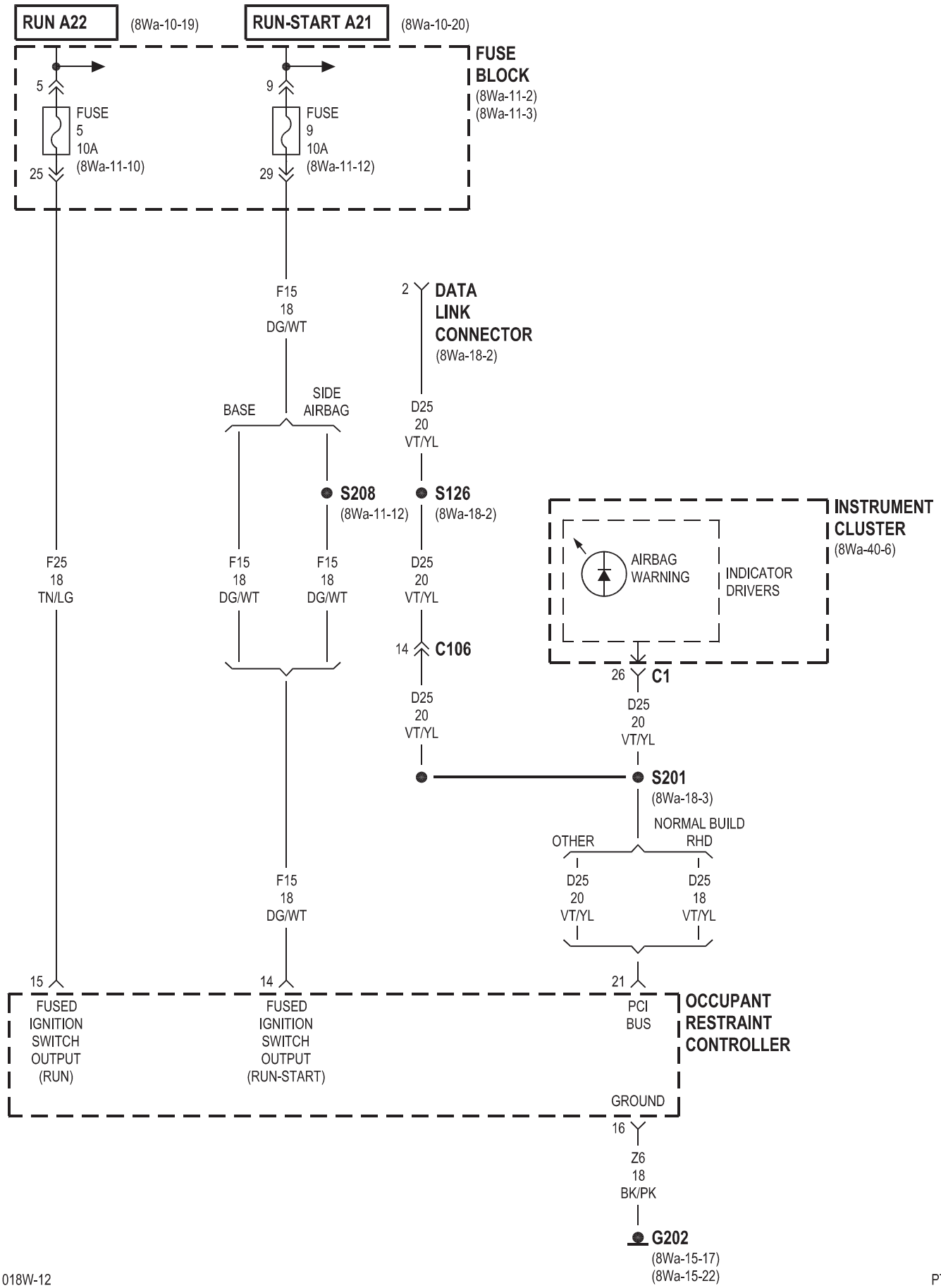
RUN A22
(8Wa-10-19)
RUN-START A21
(8Wa-10-20)
FUSE BLOCK
(8Wa-11-2)
(8Wa-11-3)
5
FUSE 5 10A
(8Wa-11-10)
25
9
FUSE 9 10A
(8Wa-11-12)
29
F15 18 DG/WT
2
DATA LINK CONNECTOR
(8Wa-18-2)
BASE
SIDE AIRBAG
D25 20 VT/YL
S208
(8Wa-11-12)
S126
(8Wa-18-2)
INSTRUMENT CLUSTER
(8Wa-40-6)
AIRBAG WARNING
INDICATOR DRIVERS
F25 18 TN/LG
F15 18 DG/WT
F15 18 DG/WT
D25 20 VT/YL
14
C106
26
C1
D25 20 VT/YL
D25 20 VT/YL
S201
(8Wa-18-3)
NORMAL BUILD
OTHER
RHD
D25 20 VT/YL
D25 18 VT/YL
F15 18 DG/WT
15
14
21
FUSED IGNITION SWITCH OUTPUT (RUN)
FUSED IGNITION SWITCH OUTPUT (RUN-START)
PCI BUS
OCCUPANT RESTRAINT CONTROLLER
GROUND
16
Z6 18 BK/PK
G202
(8Wa-15-17)
(8Wa-15-22)

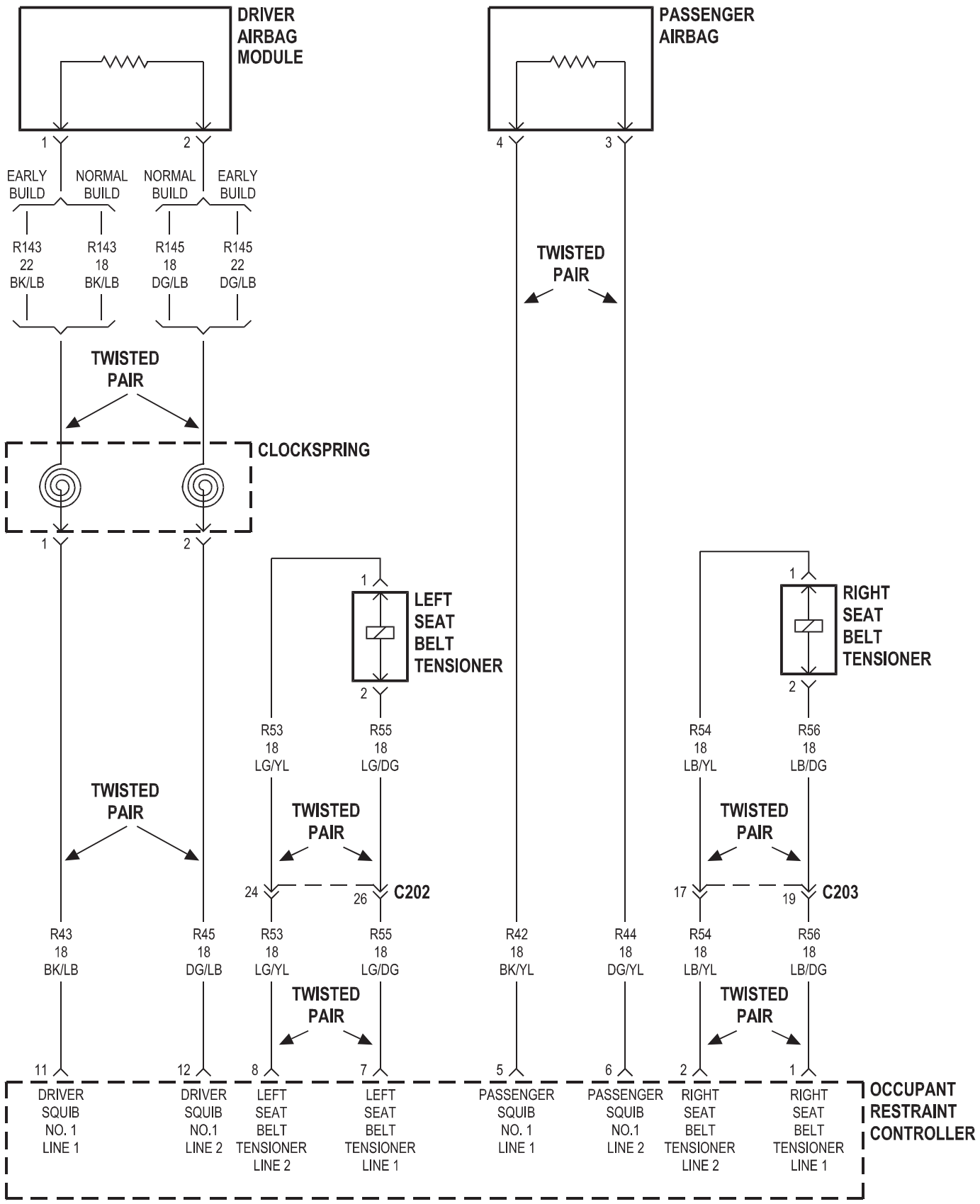
DRIVER AIRBAG MODULE
PASSENGER AIRBAG
1
2
4
3
EARLY BUILD
NORMAL BUILD
NORMAL BUILD
EARLY BUILD
R143 22 BK/LB
R143 18 BK/LB
R145 18 DG/LB
R145 22 DG/LB
TWISTED PAIR
TWISTED PAIR
CLOCKSPRING
LEFT SEAT BELT TENSIONER
RIGHT SEAT BELT TENSIONER
R53 18 LG/YL
R55 18 LG/DG
R54 18 LB/YL
R56 18 LB/DG
TWISTED PAIR
TWISTED PAIR
TWISTED PAIR
24
26
C202
17
19
C203
R43 18 BK/LB
R45 18 DG/LB
R53 18 LG/YL
R55 18 LG/DG
R42 18 BK/YL
R44 18 DG/YL
R54 18 LB/YL
R56 18 LB/DG
TWISTED PAIR
TWISTED PAIR
11
12
8
7
5
6
2
1
DRIVER SQUIB NO. 1 LINE 1
DRIVER SQUIB NO.1 LINE 2
LEFT SEAT BELT TENSIONER LINE 2
LEFT SEAT BELT TENSIONER LINE 1
PASSENGER SQUIB NO. 1 LINE 1
PASSENGER SQUIB NO.1 LINE 2
RIGHT SEAT BELT TENSIONER LINE 2
RIGHT SEAT BELT TENSIONER LINE 1
OCCUPANT RESTRAINT CONTROLLER

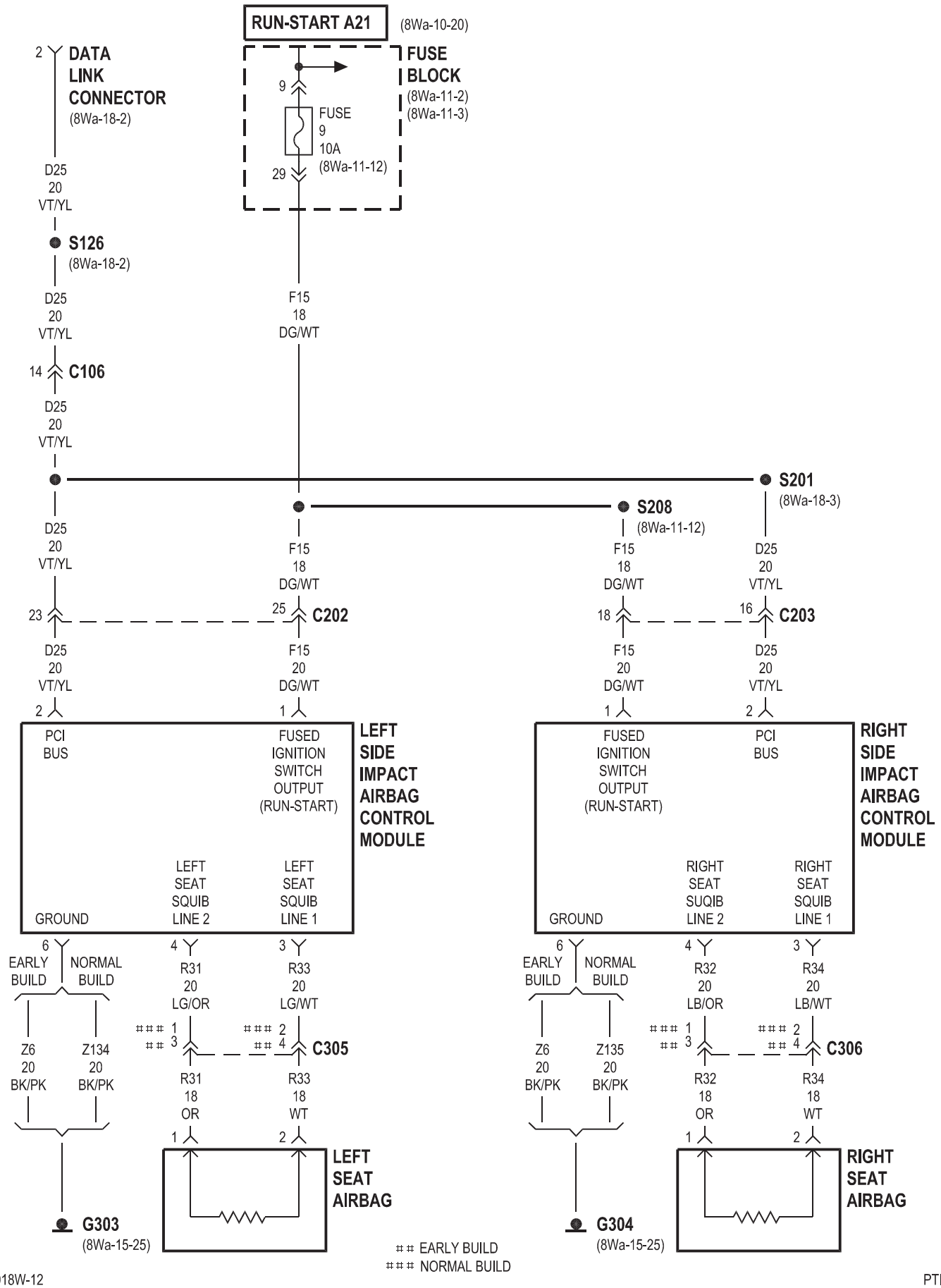
RUN-START A21
(8Wa-10-20)
2
DATA LINK CONNECTOR
(8Wa-18-2)
FUSE BLOCK
(8Wa-11-2)
(8Wa-11-3)
9
FUSE 9 10A
(8Wa-11-12)
29
D25 20 VT/YL
S126
(8Wa-18-2)
F15 18 DG/WT
14
C106
S201
(8Wa-18-3)
S208
(8Wa-11-12)
23
25
C202
18
16
C203
F15 20 DG/WT
D25 20 VT/YL
PCI BUS
FUSED IGNITION SWITCH OUTPUT (RUN-START)
LEFT SIDE IMPACT AIRBAG CONTROL MODULE
GROUND
LEFT SEAT SQUIB LINE 2
LEFT SEAT SQUIB LINE 1
RIGHT SIDE IMPACT AIRBAG CONTROL MODULE
RIGHT SEAT SUQIB LINE 2
RIGHT SEAT SQUIB LINE 1
EARLY BUILD
NORMAL BUILD
R31 20 LG/OR
R33 20 LG/WT
R32 20 LB/OR
R34 20 LB/WT
C305
C306
Z6 20 BK/PK
Z134 20 BK/PK
Z135 20 BK/PK
R31 18 OR
R33 18 WT
R32 18 OR
R34 18 WT
LEFT SEAT AIRBAG
RIGHT SEAT AIRBAG
G303
(8Wa-15-25)
G304
(8Wa-15-25)
EARLY BUILD
NORMAL BUILD

8W-44 INTERIOR LIGHTING

Component	Page
A/C- Heater Control Switch	8Wa-44-5
Cargo Lamp	8Wa-44-2
Center Stack Lamp	8Wa-44-6
Dome Lamp	8Wa-44-3
Dome Lamp/Intrusion Sensor	8Wa-44-2, 3
Front Power Window Switch	8Wa-44-5
Fuse 10 (FB)	8Wa-44-4
Fuse 18 (PDC)	8Wa-44-2
Fuse Block	8Wa-44-4
G200	8Wa-44-2, 4
G201	8Wa-44-6
G203	8Wa-44-5
G204	8Wa-44-3
Headlamp Leveling Switch	8Wa-44-6
Instrument Cluster	8Wa-44-2, 4, 5
Left Visor/Vanity Lamp	8Wa-44-3
Map/Reading Lamps	8Wa-44-3
Overhead Console Module	8Wa-44-3, 4
Power Distribution Center	8Wa-44-2
Radio	8Wa-44-5
Rear Window Defogger Switch	8Wa-44-6
Rear Wiper Switch	8Wa-44-6
Remote Keyless Entry Module	8Wa-44-2
Right Visor/Vanity Lamp	8Wa-44-3
Traction Control Switch	8Wa-44-6
Transmission Range Indicator Illumination	8Wa-44-5, 6

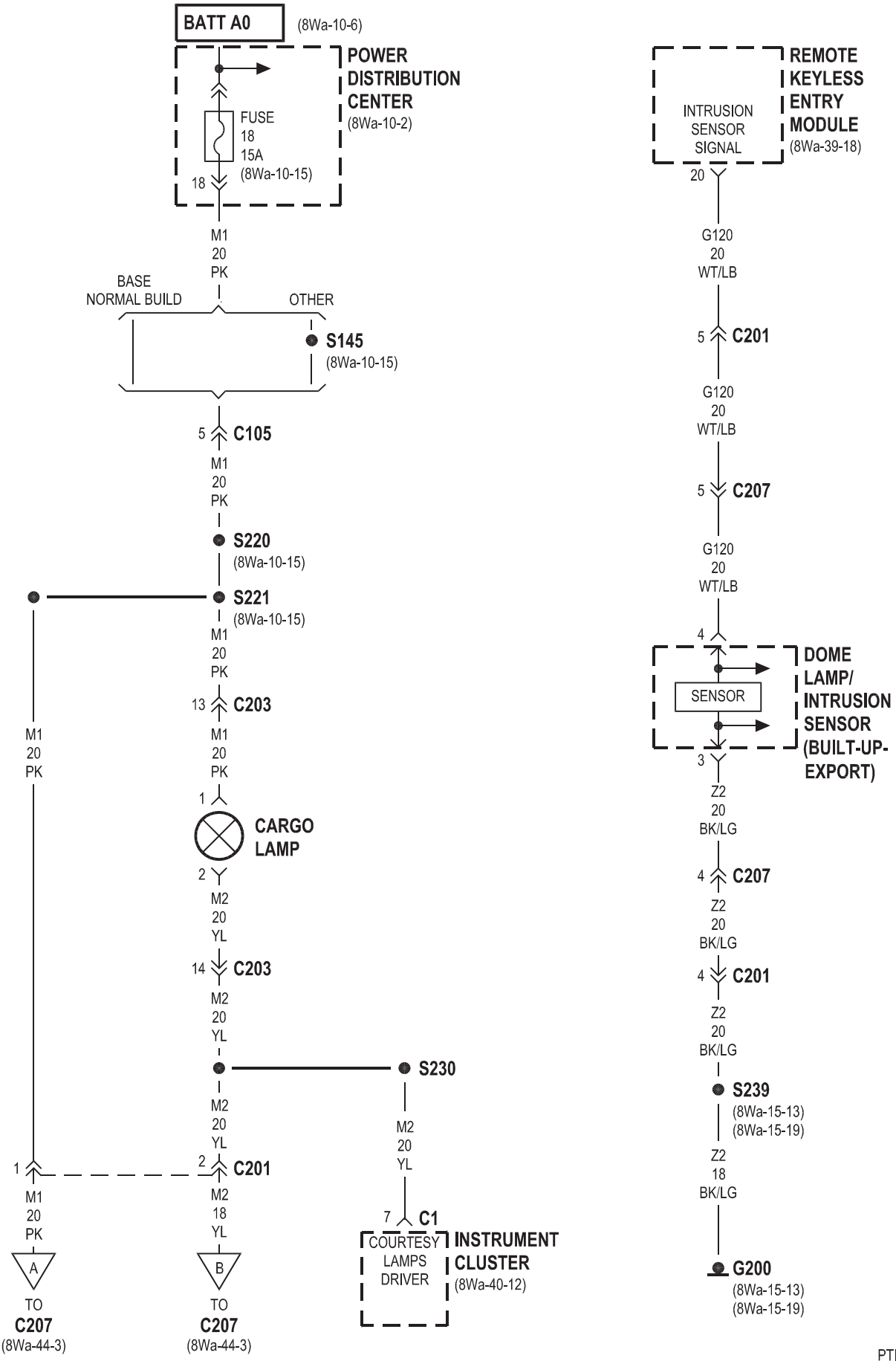
BATT A0
(8Wa-10-6)
POWER DISTRIBUTION CENTER
(8Wa-10-2)
FUSE 18 15A
(8Wa-10-15)
18
M1 20 PK
BASE NORMAL BUILD
OTHER
S145
(8Wa-10-15)
5
C105
M1 20 PK
S220
(8Wa-10-15)
S221
(8Wa-10-15)
M1 20 PK
13
C203
M1 20 PK
1
CARGO LAMP
2
M2 20 YL
14
C203
M2 20 YL
S230
M2 20 YL
M1 20 PK
1
2
C201
M1 20 PK
M2 18 YL
A
B
TO C207
(8Wa-44-3)
TO C207
(8Wa-44-3)
M2 20 YL
7
C1
COURTESY LAMPS DRIVER
INSTRUMENT CLUSTER
(8Wa-40-12)
REMOTE KEYLESS ENTRY MODULE
(8Wa-39-18)
INTRUSION SENSOR SIGNAL
20
G120 20 WT/LB
5
C201
G120 20 WT/LB
5
C207
G120 20 WT/LB
4
SENSOR
DOME LAMP/ INTRUSION SENSOR (BUILT-UP-EXPORT)
3
Z2 20 BK/LG
4
C207
Z2 20 BK/LG
4
C201
Z2 20 BK/LG
S239
(8Wa-15-13)
(8Wa-15-19)
Z2 18 BK/LG
G200
(8Wa-15-13)
(8Wa-15-19)

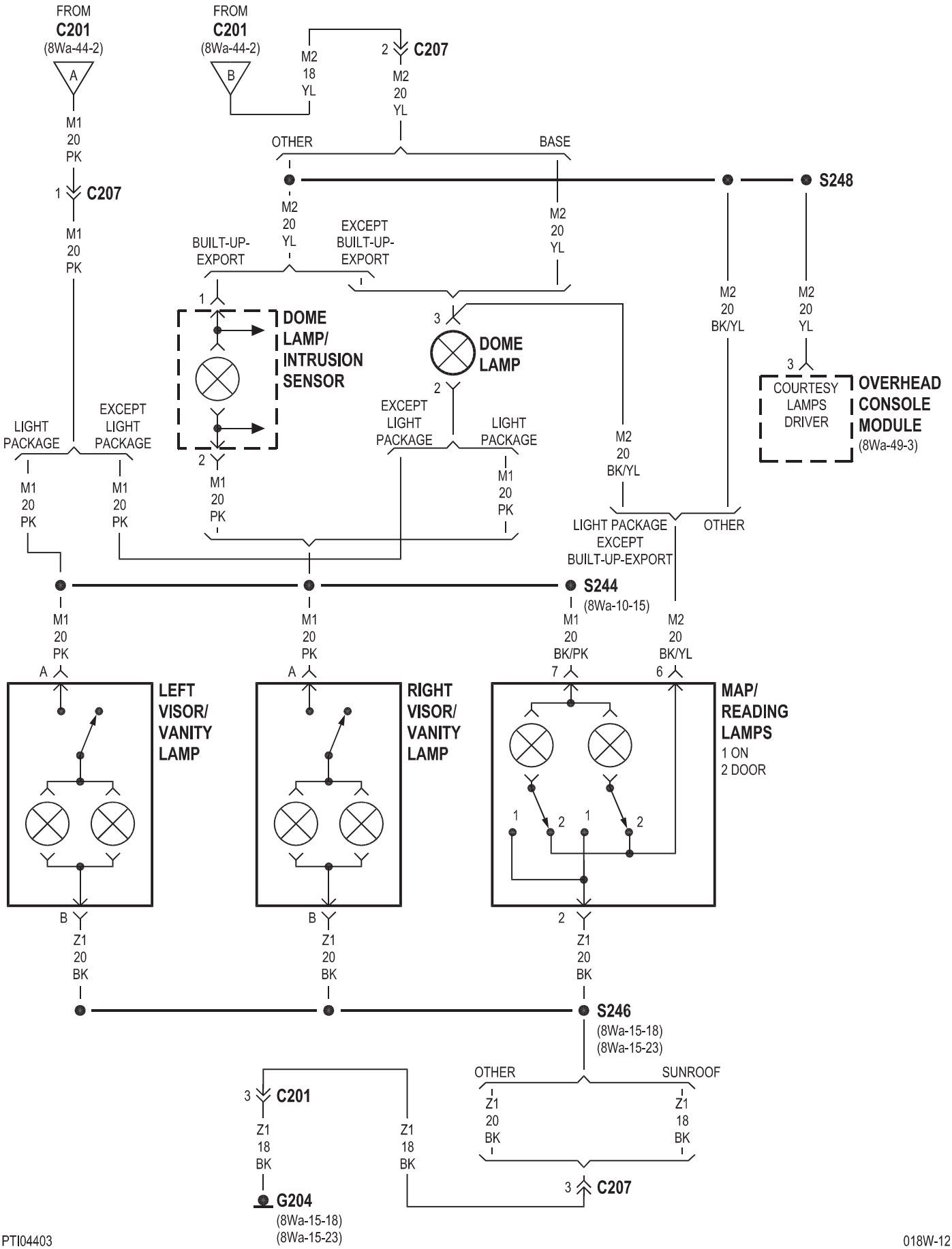
FROM
C201
(8Wa-44-2)
A
M1
20
PK
1
C207
M1
20
PK
FROM
C201
(8Wa-44-2)
B
M2
18
YL
2
C207
M2
20
YL
OTHER
BASE
S248
M2
20
YL
BUILT-UP-EXPORT
EXCEPT BUILT-UP-EXPORT
M2
20
YL
M2
20
BK/YL
M2
20
YL
1
DOME LAMP/ INTRUSION SENSOR
3
DOME LAMP
2
3
COURTESY LAMPS DRIVER
OVERHEAD CONSOLE MODULE
(8Wa-49-3)
LIGHT PACKAGE
EXCEPT LIGHT PACKAGE
EXCEPT LIGHT PACKAGE
LIGHT PACKAGE
M2
20
BK/YL
2
M1
20
PK
M1
20
PK
M1
20
PK
M1
20
PK
LIGHT PACKAGE EXCEPT BUILT-UP-EXPORT
OTHER
S244
(8Wa-10-15)
M1
20
PK
M1
20
PK
M1
20
BK/PK
M2
20
BK/YL
A
A
7
6
LEFT VISOR/ VANITY LAMP
RIGHT VISOR/ VANITY LAMP
MAP/ READING LAMPS
1 ON
2 DOOR
1
2
1
2
B
B
2
Z1
20
BK
Z1
20
BK
Z1
20
BK
S246
(8Wa-15-18)
(8Wa-15-23)
OTHER
SUNROOF
3
C201
Z1
18
BK
Z1
18
BK
Z1
20
BK
Z1
18
BK
3
C207
G204
(8Wa-15-18)
(8Wa-15-23)

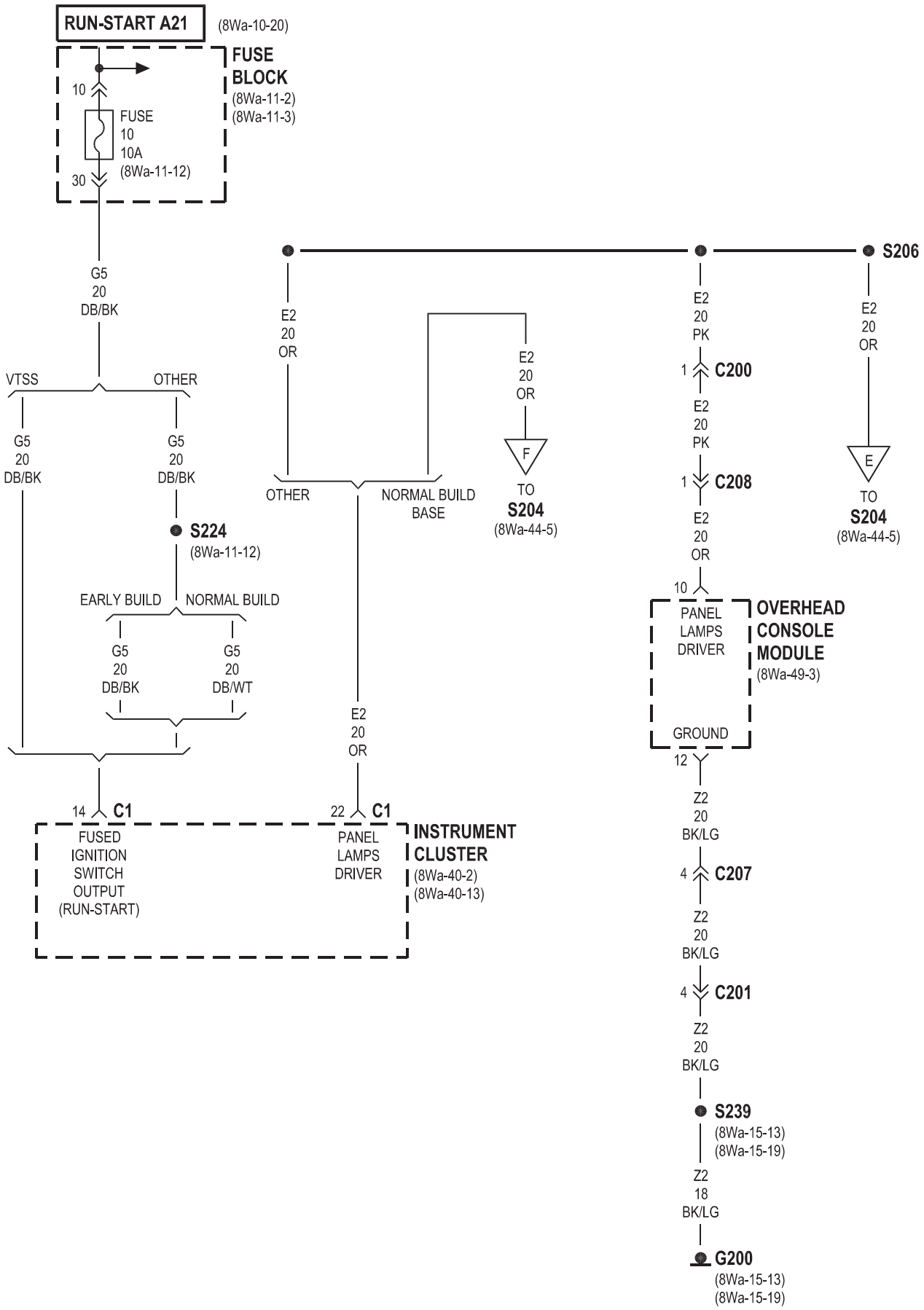
RUN-START A21
(8Wa-10-20)
FUSE BLOCK
(8Wa-11-2)
(8Wa-11-3)
10
FUSE
10
10A
(8Wa-11-12)
30
G5
20
DB/BK
VTSS
OTHER
G5
20
DB/BK
G5
20
DB/BK
S224
(8Wa-11-12)
EARLY BUILD
NORMAL BUILD
G5
20
DB/BK
G5
20
DB/WT
14
C1
FUSED
IGNITION
SWITCH
OUTPUT
(RUN-START)
E2
20
OR
OTHER
NORMAL BUILD
BASE
E2
20
OR
22
C1
PANEL
LAMPS
DRIVER
INSTRUMENT CLUSTER
(8Wa-40-2)
(8Wa-40-13)
E2
20
OR
F
TO
S204
(8Wa-44-5)
S206
E2
20
PK
1
C200
E2
20
PK
1
C208
E2
20
OR
10
PANEL
LAMPS
DRIVER
OVERHEAD CONSOLE MODULE
(8Wa-49-3)
GROUND
12
Z2
20
BK/LG
4
C207
Z2
20
BK/LG
4
C201
Z2
20
BK/LG
S239
(8Wa-15-13)
(8Wa-15-19)
Z2
18
BK/LG
G200
(8Wa-15-13)
(8Wa-15-19)
E2
20
OR
E
TO
S204
(8Wa-44-5)

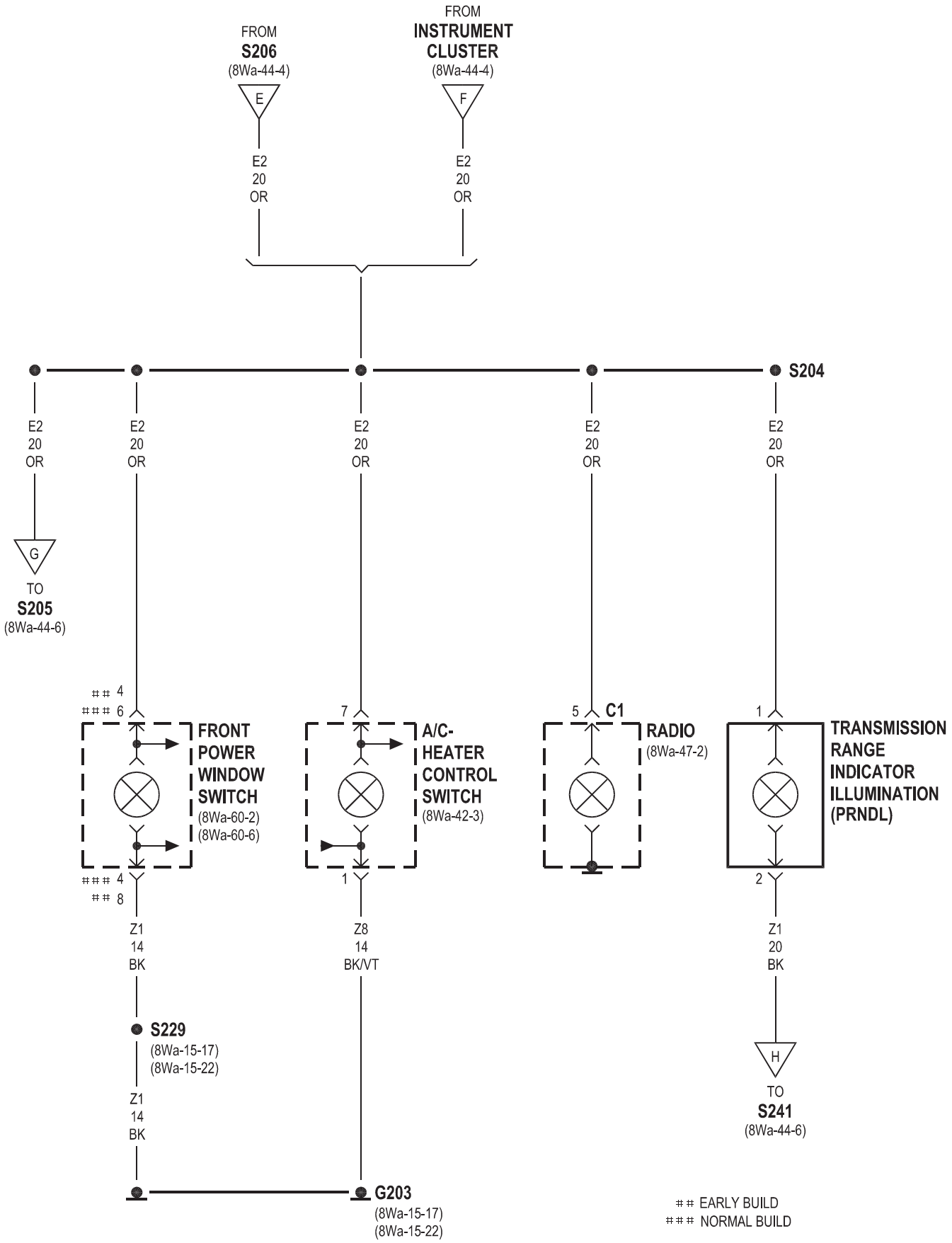
FROM
S206
(8Wa-44-4)
E
E2
20
OR
FROM
INSTRUMENT
CLUSTER
(8Wa-44-4)
F
E2
20
OR
S204
E2
20
OR
G
TO
S205
(8Wa-44-6)
4
6
7
5
C1
1
FRONT
POWER
WINDOW
SWITCH
(8Wa-60-2)
(8Wa-60-6)
A/C-
HEATER
CONTROL
SWITCH
(8Wa-42-3)
RADIO
(8Wa-47-2)
TRANSMISSION
RANGE
INDICATOR
ILLUMINATION
(PRNDL)
4
8
1
2
Z1
14
BK
Z8
14
BK/VT
Z1
20
BK
S229
(8Wa-15-17)
(8Wa-15-22)
Z1
14
BK
H
TO
S241
(8Wa-44-6)
G203
(8Wa-15-17)
(8Wa-15-22)
EARLY BUILD
NORMAL BUILD

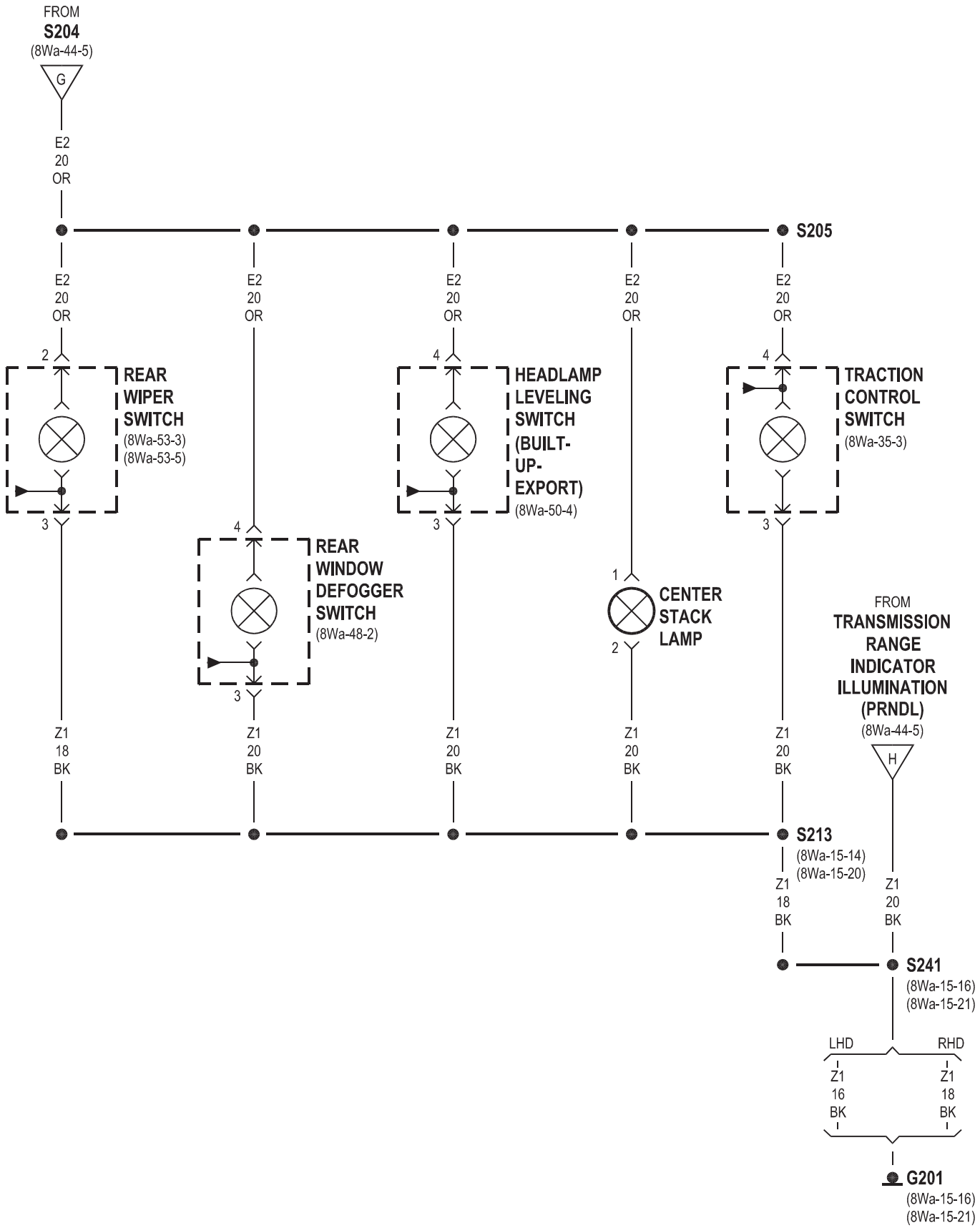
FROM
S204
(8Wa-44-5)
G
E2
20
OR
S205
E2
20
OR
2
REAR
WIPER
SWITCH
(8Wa-53-3)
(8Wa-53-5)
3
4
REAR
WINDOW
DEFOGGER
SWITCH
(8Wa-48-2)
4
HEADLAMP
LEVELING
SWITCH
(BUILT-
UP-
EXPORT)
(8Wa-50-4)
1
CENTER
STACK
LAMP
2
TRACTION
CONTROL
SWITCH
(8Wa-35-3)
FROM
TRANSMISSION
RANGE
INDICATOR
ILLUMINATION
(PRNDL)
(8Wa-44-5)
H
Z1
18
BK
Z1
20
BK
S213
(8Wa-15-14)
(8Wa-15-20)
S241
(8Wa-15-16)
(8Wa-15-21)
LHD
RHD
Z1
16
BK
G201
(8Wa-15-16)
(8Wa-15-21)

8W-47 AUDIO SYSTEM

Component	Page
Data Link Connector	8Wa-47-2
Fuse 2 (FB)	8Wa-47-2
Fuse 13 (FB)	8Wa-47-2
Fuse 18 (PDC)	8Wa-47-2
Fuse Block	8Wa-47-2
G200	8Wa-47-2
Headlamp Switch	8Wa-47-2
Instrument Cluster	8Wa-47-2
Left Front Door Speaker	8Wa-47-4, 5
Left Instrument Panel Speaker	8Wa-47-4, 5
Left Rear Speaker	8Wa-47-3
Power Distribution Center	8Wa-47-2
Radio	8Wa-47-2, 3, 4, 5
Right Front Door Speaker	8Wa-47-4, 5
Right Instrument Panel Speaker	8Wa-47-4, 5
Right Rear Speaker	8Wa-47-3

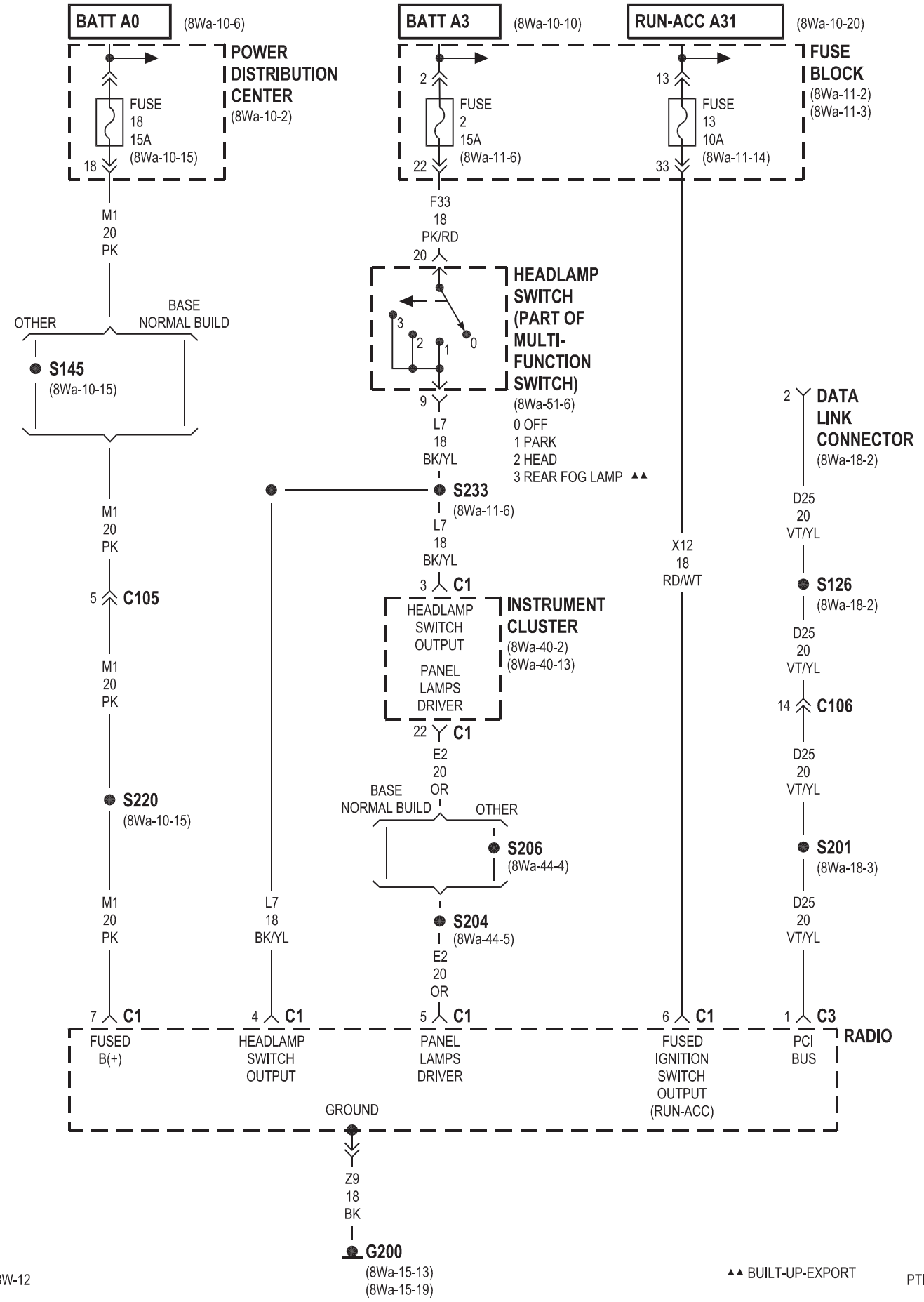

▲▲ BUILT-UP-EXPORT

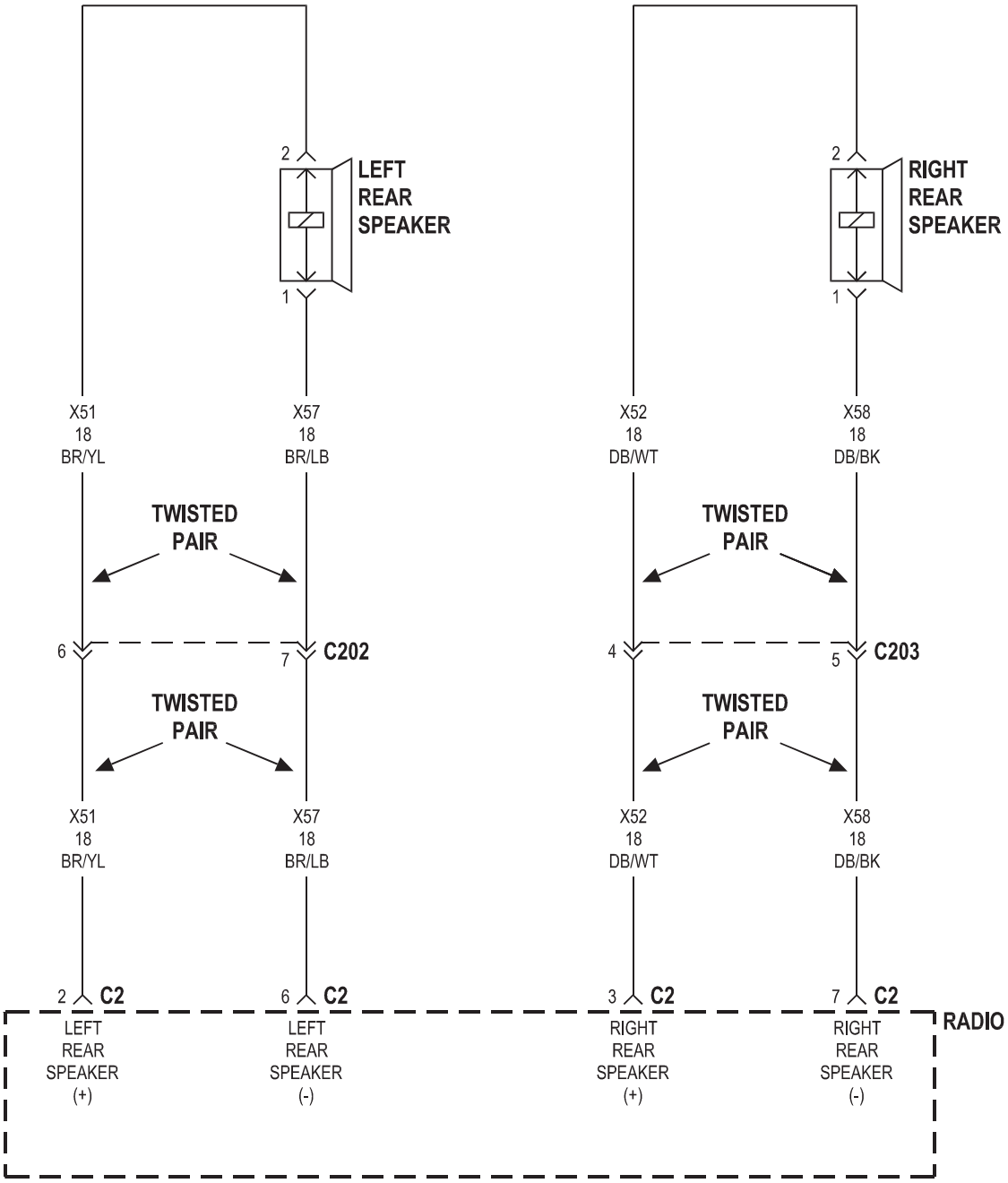
2
LEFT
REAR
SPEAKER
1
2
RIGHT
REAR
SPEAKER
1
X51
18
BR/YL
X57
18
BR/LB
X52
18
DB/WT
X58
18
DB/BK
TWISTED
PAIR
TWISTED
PAIR
6
7
C202
4
5
C203
TWISTED
PAIR
TWISTED
PAIR
X51
18
BR/YL
X57
18
BR/LB
X52
18
DB/WT
X58
18
DB/BK
2
C2
6
C2
3
C2
7
C2
RADIO
LEFT
REAR
SPEAKER
(+)
LEFT
REAR
SPEAKER
(-)
RIGHT
REAR
SPEAKER
(+)
RIGHT
REAR
SPEAKER
(-)

NORMAL BUILD

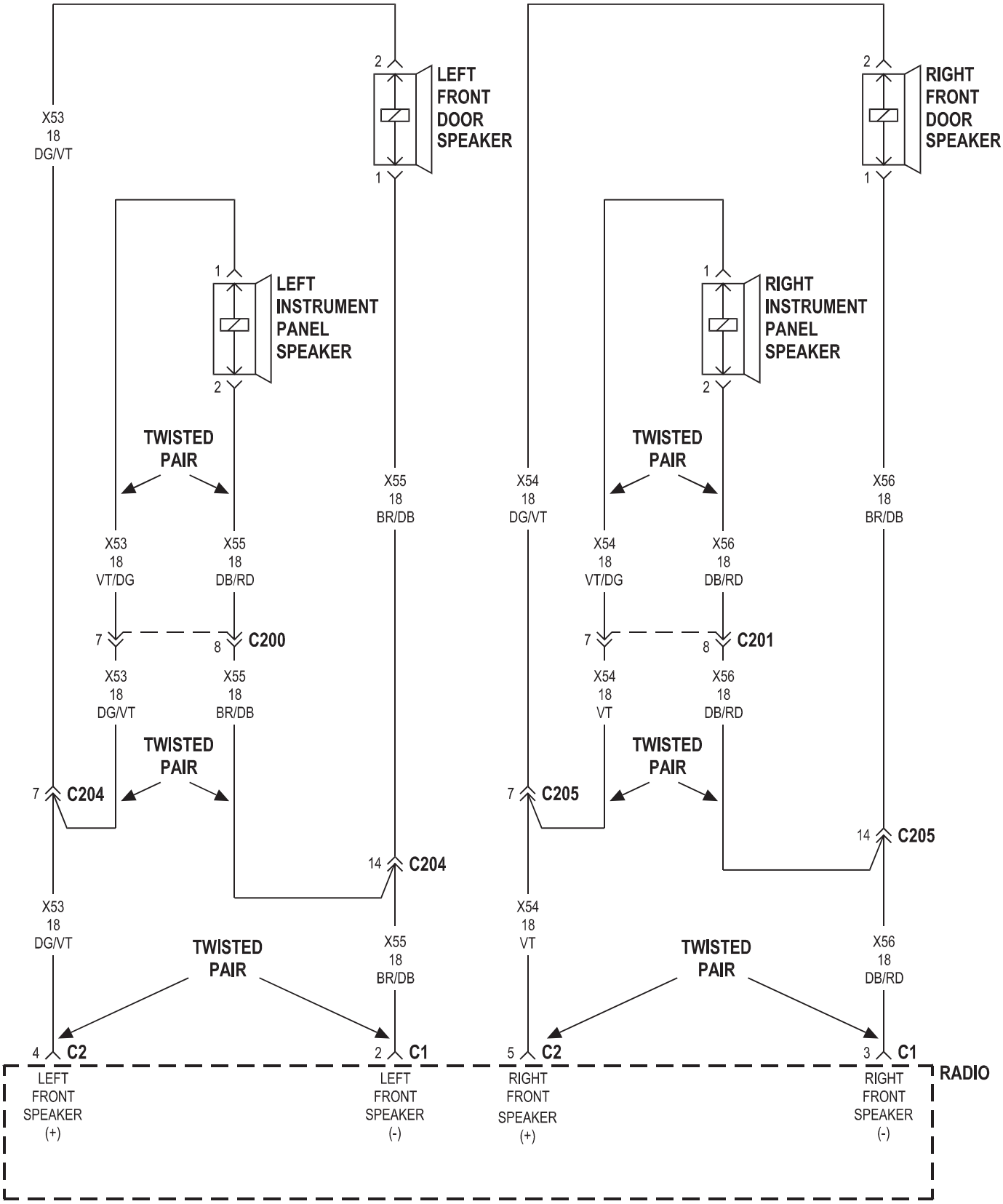

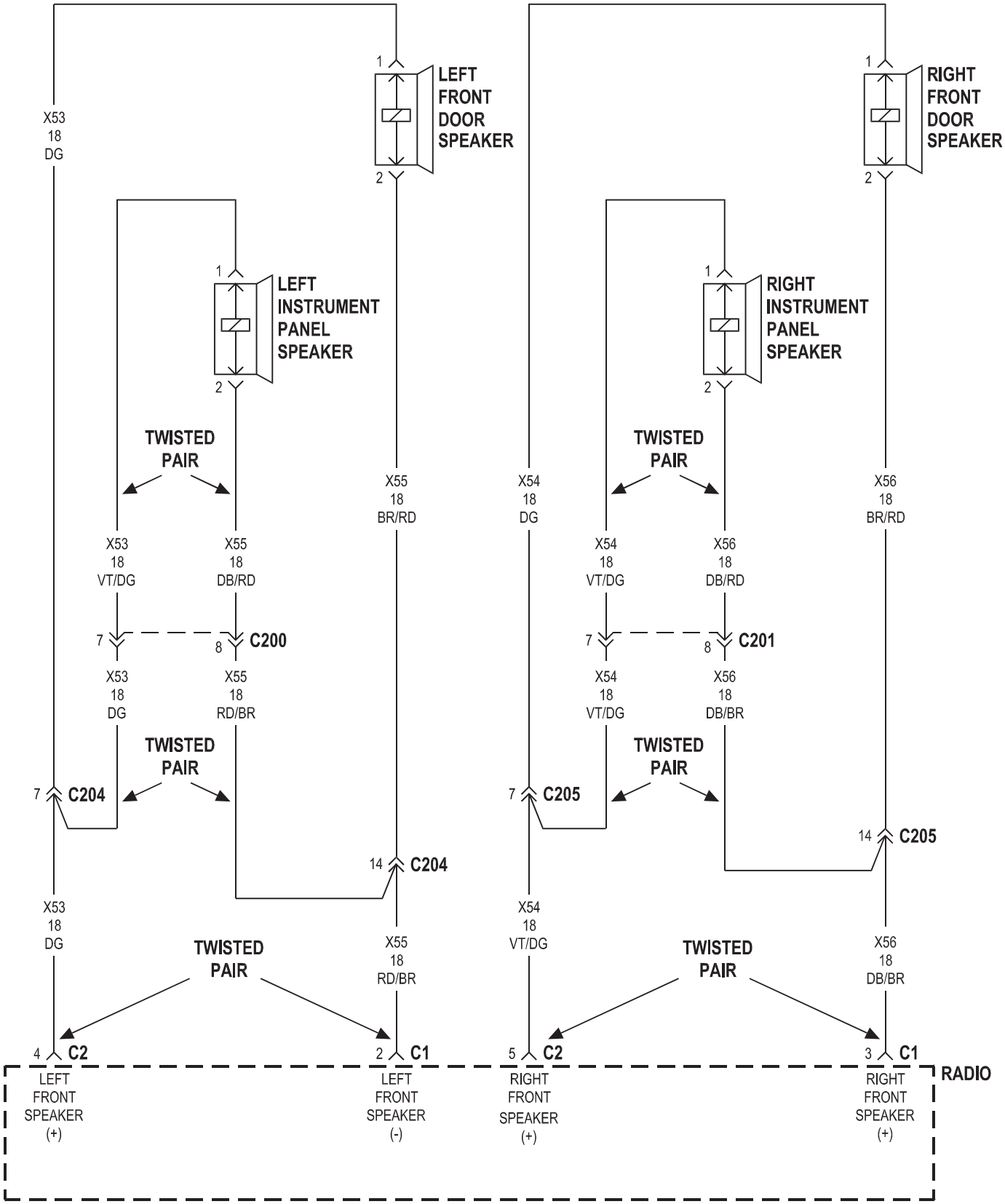
LEFT FRONT DOOR SPEAKER
RIGHT FRONT DOOR SPEAKER
LEFT INSTRUMENT PANEL SPEAKER
RIGHT INSTRUMENT PANEL SPEAKER
X53 18 DG
X55 18 BR/RD
X54 18 DG
X56 18 BR/RD
TWISTED PAIR
X53 18 VT/DG
X55 18 DB/RD
X54 18 VT/DG
X56 18 DB/RD
C200
C201
X53 18 DG
X55 18 RD/BR
X54 18 VT/DG
X56 18 DB/BR
C204
C205
X53 18 DG
X55 18 RD/BR
X54 18 VT/DG
X56 18 DB/BR
C2
C1
LEFT FRONT SPEAKER (+)
LEFT FRONT SPEAKER (-)
RIGHT FRONT SPEAKER (+)
RIGHT FRONT SPEAKER (+)
RADIO

2001 PT CRUISER

8W-48 REAR WINDOW DEFOGGER

Component	Page
A/C- Heater Control Switch	8Wa-48-2
Fuse 6 (FB)	8Wa-48-2
Fuse 8 (PDC)	8Wa-48-2
Fuse Block	8Wa-48-2
G201	8Wa-48-2
G300	8Wa-48-2
Power Distribution Center	8Wa-48-2
Rear Window Defogger	8Wa-48-2
Rear Window Defogger Switch	8Wa-48-2

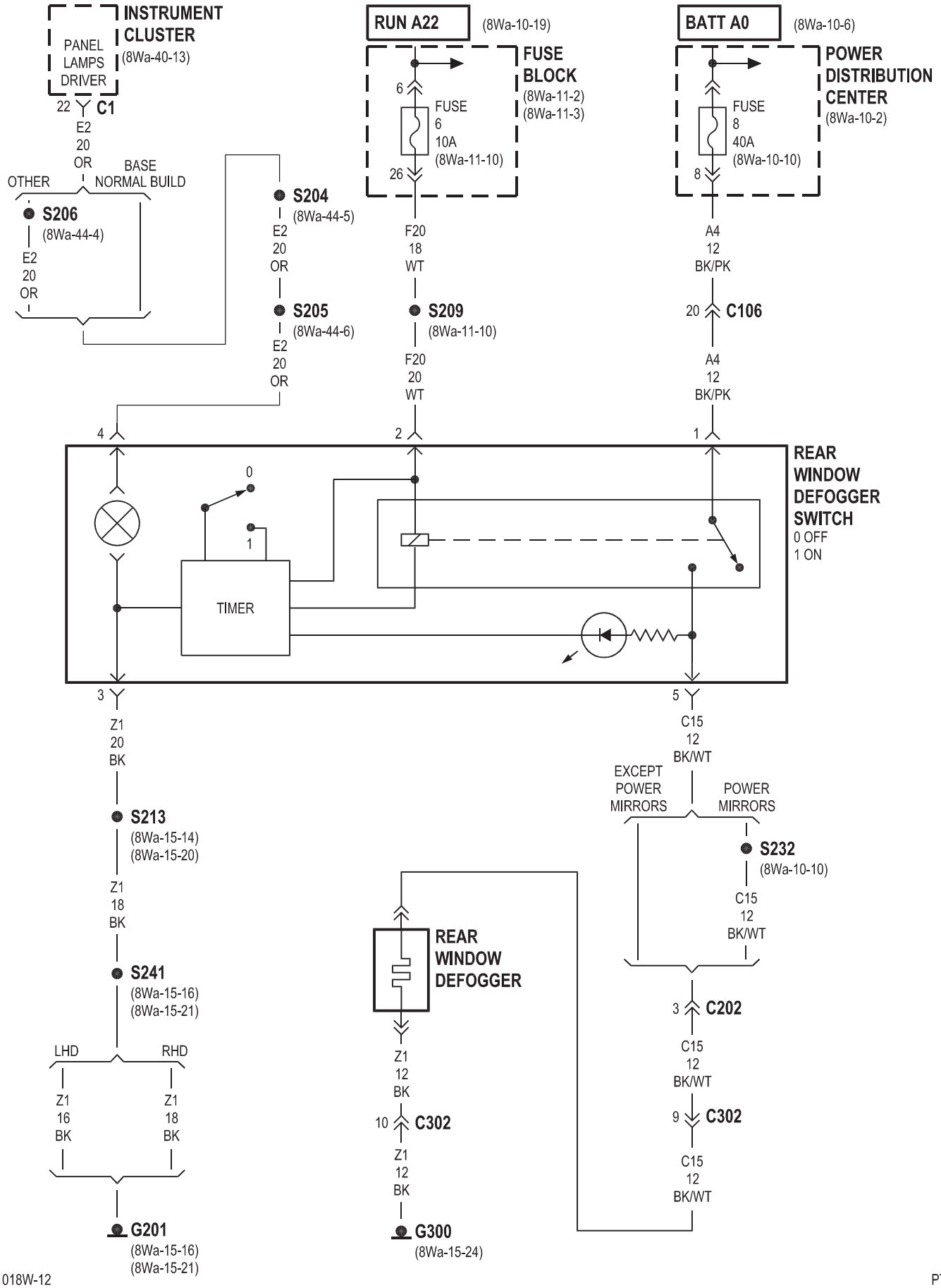
INSTRUMENT CLUSTER
(8Wa-40-13)
PANEL LAMPS DRIVER
22
C1
E2
20
OR
OTHER
BASE NORMAL BUILD
S206
(8Wa-44-4)
E2
20
OR
S204
(8Wa-44-5)
E2
20
OR
S205
(8Wa-44-6)
E2
20
OR
RUN A22
(8Wa-10-19)
FUSE BLOCK
(8Wa-11-2)
(8Wa-11-3)
6
FUSE
6
10A
(8Wa-11-10)
26
F20
18
WT
S209
(8Wa-11-10)
F20
20
WT
BATT A0
(8Wa-10-6)
POWER DISTRIBUTION CENTER
(8Wa-10-2)
FUSE
8
40A
(8Wa-10-10)
8
A4
12
BK/PK
20
C106
A4
12
BK/PK
4
2
1
REAR WINDOW DEFOGGER SWITCH
0 OFF
1 ON
0
1
TIMER
3
5
Z1
20
BK
S213
(8Wa-15-14)
(8Wa-15-20)
Z1
18
BK
S241
(8Wa-15-16)
(8Wa-15-21)
LHD
RHD
Z1
16
BK
Z1
18
BK
G201
(8Wa-15-16)
(8Wa-15-21)
REAR WINDOW DEFOGGER
Z1
12
BK
10
C302
Z1
12
BK
G300
(8Wa-15-24)
C15
12
BK/WT
EXCEPT POWER MIRRORS
POWER MIRRORS
S232
(8Wa-10-10)
C15
12
BK/WT
3
C202
C15
12
BK/WT
9
C302
C15
12
BK/WT

8W-49 OVERHEAD CONSOLE

Component	Page
Ambient Temperature Sensor	8Wa-49-2
Fuse 14 (FB)	8Wa-49-2
Fuse 18 (PDC)	8Wa-49-2
Fuse Block	8Wa-49-2
G200	8Wa-49-3
G204	8Wa-49-3
Instrument Cluster	8Wa-49-3
Overhead Console Module	8Wa-49-2, 3
Power Distribution Center	8Wa-49-2
Power Sunroof Module	8Wa-49-3

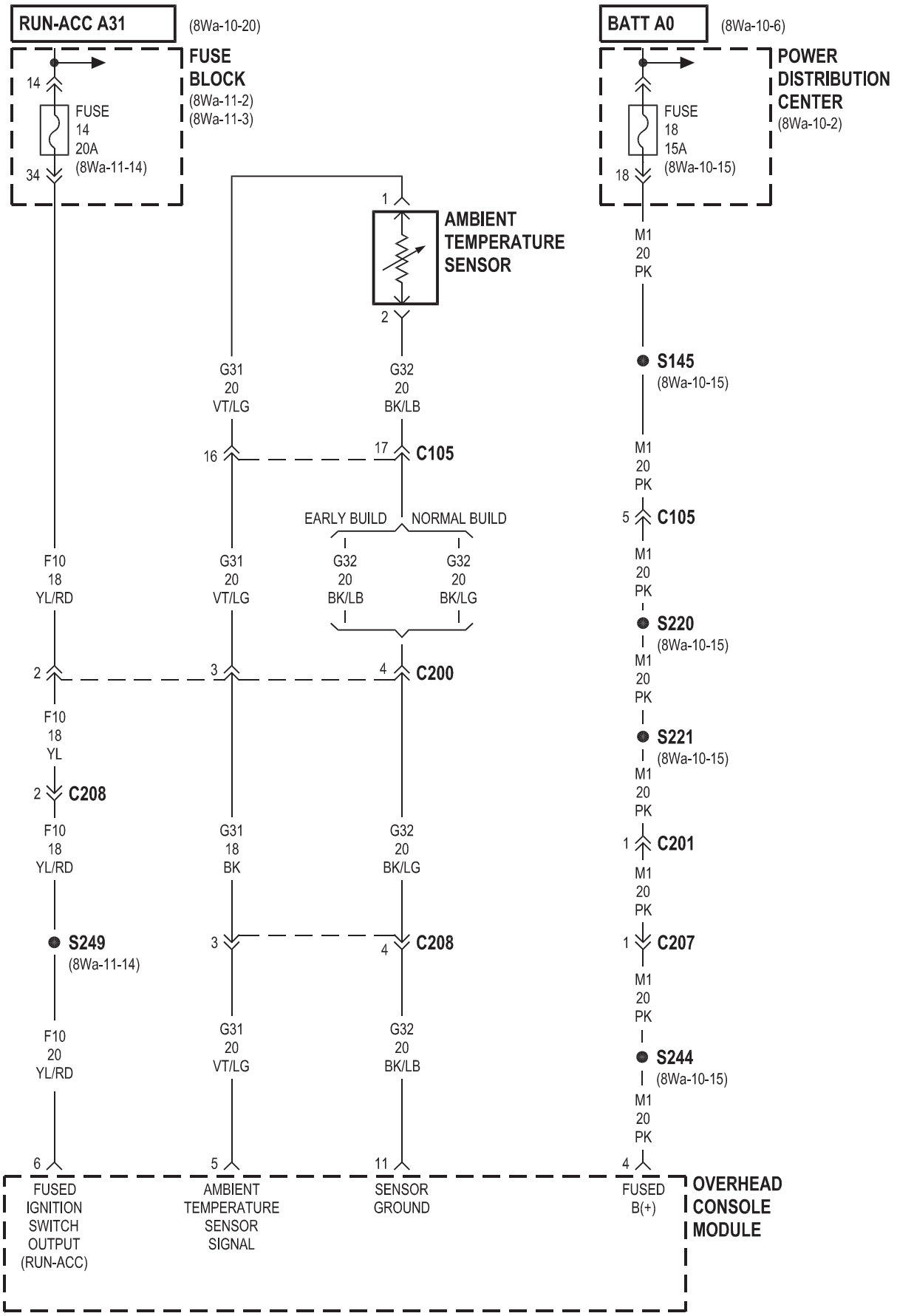
RUN-ACC A31
(8Wa-10-20)
FUSE BLOCK
(8Wa-11-2)
(8Wa-11-3)
14
FUSE 14 20A
(8Wa-11-14)
34
BATT A0
(8Wa-10-6)
POWER DISTRIBUTION CENTER
(8Wa-10-2)
FUSE 18 15A
(8Wa-10-15)
18
1
AMBIENT TEMPERATURE SENSOR
2
M1 20 PK
S145
(8Wa-10-15)
G31 20 VT/LG
G32 20 BK/LB
16
17
C105
M1 20 PK
5
C105
EARLY BUILD
NORMAL BUILD
F10 18 YL/RD
G31 20 VT/LG
G32 20 BK/LB
G32 20 BK/LG
M1 20 PK
S220
(8Wa-10-15)
2
3
4
C200
M1 20 PK
F10 18 YL
S221
(8Wa-10-15)
2
C208
M1 20 PK
F10 18 YL/RD
G31 18 BK
G32 20 BK/LG
1
C201
M1 20 PK
S249
(8Wa-11-14)
3
4
C208
1
C207
M1 20 PK
F10 20 YL/RD
G31 20 VT/LG
G32 20 BK/LB
S244
(8Wa-10-15)
M1 20 PK
6
5
11
4
FUSED IGNITION SWITCH OUTPUT (RUN-ACC)
AMBIENT TEMPERATURE SENSOR SIGNAL
SENSOR GROUND
FUSED B(+)
OVERHEAD CONSOLE MODULE

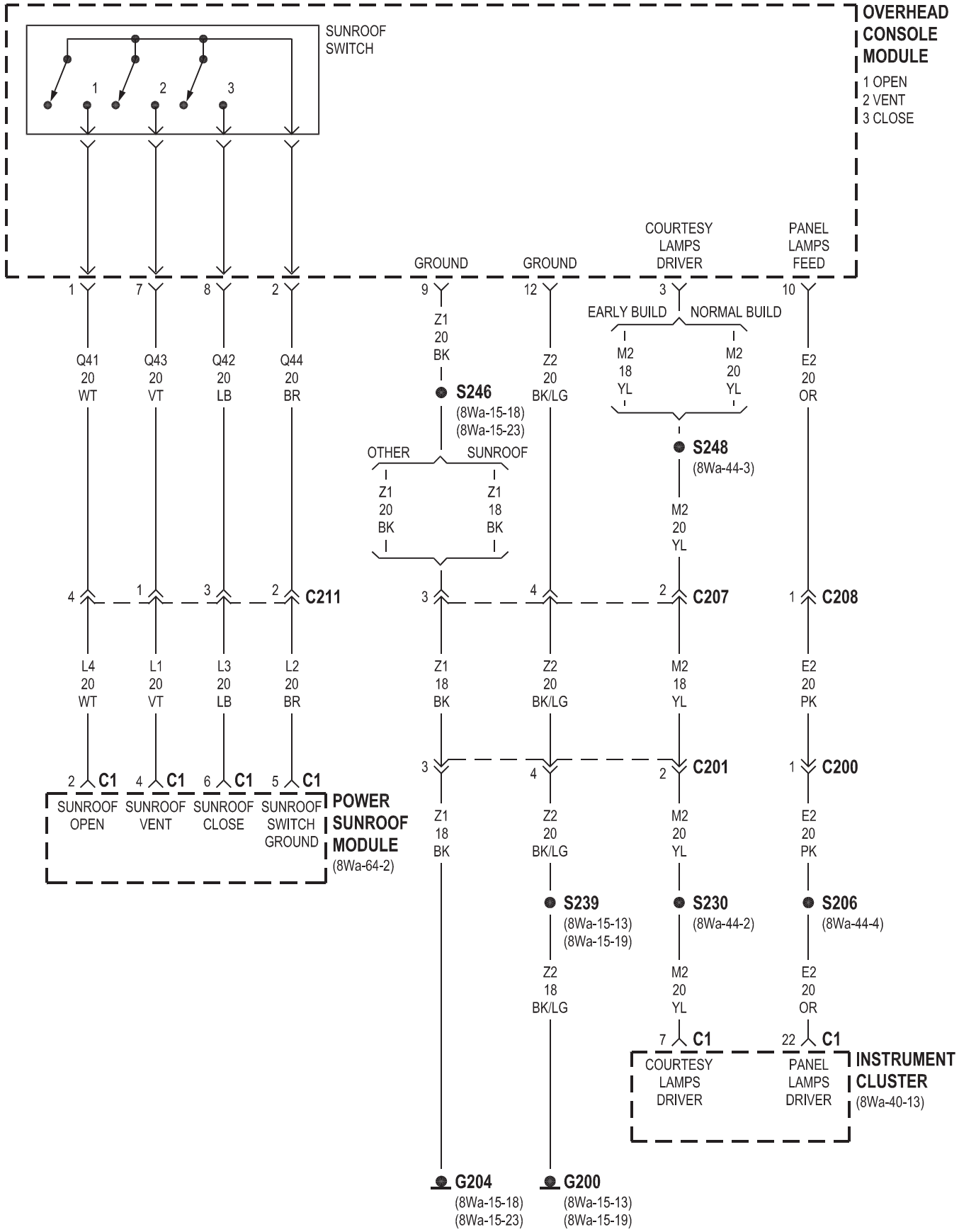
OVERHEAD CONSOLE MODULE
1 OPEN
2 VENT
3 CLOSE
SUNROOF SWITCH
1
2
3
GROUND
GROUND
COURTESY LAMPS DRIVER
PANEL LAMPS FEED
1
7
8
2
9
12
3
10
Q41 20 WT
Q43 20 VT
Q42 20 LB
Q44 20 BR
Z1 20 BK
S246
(8Wa-15-18)
(8Wa-15-23)
Z2 20 BK/LG
EARLY BUILD
NORMAL BUILD
M2 18 YL
M2 20 YL
E2 20 OR
S248
(8Wa-44-3)
OTHER
SUNROOF
Z1 20 BK
Z1 18 BK
M2 20 YL
4
1
3
2
C211
3
4
2
C207
1
C208
L4 20 WT
L1 20 VT
L3 20 LB
L2 20 BR
Z1 18 BK
Z2 20 BK/LG
M2 18 YL
E2 20 PK
3
4
2
C201
1
C200
2 C1
4 C1
6 C1
5 C1
SUNROOF OPEN
SUNROOF VENT
SUNROOF CLOSE
SUNROOF SWITCH GROUND
POWER SUNROOF MODULE
(8Wa-64-2)
Z1 18 BK
Z2 20 BK/LG
M2 20 YL
E2 20 PK
S239
(8Wa-15-13)
(8Wa-15-19)
S230
(8Wa-44-2)
S206
(8Wa-44-4)
Z2 18 BK/LG
M2 20 YL
E2 20 OR
7 C1
22 C1
COURTESY LAMPS DRIVER
PANEL LAMPS DRIVER
INSTRUMENT CLUSTER
(8Wa-40-13)
G204
(8Wa-15-18)
(8Wa-15-23)
G200
(8Wa-15-13)
(8Wa-15-19)

2001 PT CRUISER

8W-50 FRONT LIGHTING

Component	Page
Circuit Breaker No. 1 (FB)	8Wa-50-2
Fuse 1 (FB)	8Wa-50-5
Fuse 2 (FB)	8Wa-50-5, 8
Fuse 3 (FB)	8Wa-50-5
Fuse 8 (FB)	8Wa-50-6
Fuse 19 (FB)	8Wa-50-3
Fuse 20 (FB)	8Wa-50-3, 4
Fuse 22 (PDC)	8Wa-50-6
Fuse Block	8Wa-50-2, 3, 4, 5, 6, 8
G103	8Wa-50-3, 5, 7, 8
G104	8Wa-50-3, 5, 7, 8
G201	8Wa-50-2, 4
Headlamp Leveling Switch	8Wa-50-3, 4
Headlamp Relay	8Wa-50-2, 6
Headlamp Switch	8Wa-50-2, 5, 6, 7, 8
Instrument Cluster	8Wa-50-2, 4, 7
Left Fog Lamp	8Wa-50-7
Left Front Park/Turn Signal Lamp	8Wa-50-8
Left High Beam Headlamp	8Wa-50-3
Left Lavalier Module	8Wa-50-5
Left Low Beam Headlamp	8Wa-50-3
Power Distribution Center	8Wa-50-6
Remote Keyless Entry Module	8Wa-50-2, 5
Right Fog Lamp	8Wa-50-7
Right Front Park/Turn Signal Lamp	8Wa-50-8
Right High Beam Headlamp	8Wa-50-3
Right Lavalier Module	8Wa-50-5
Right Low Beam Headlamp	8Wa-50-3

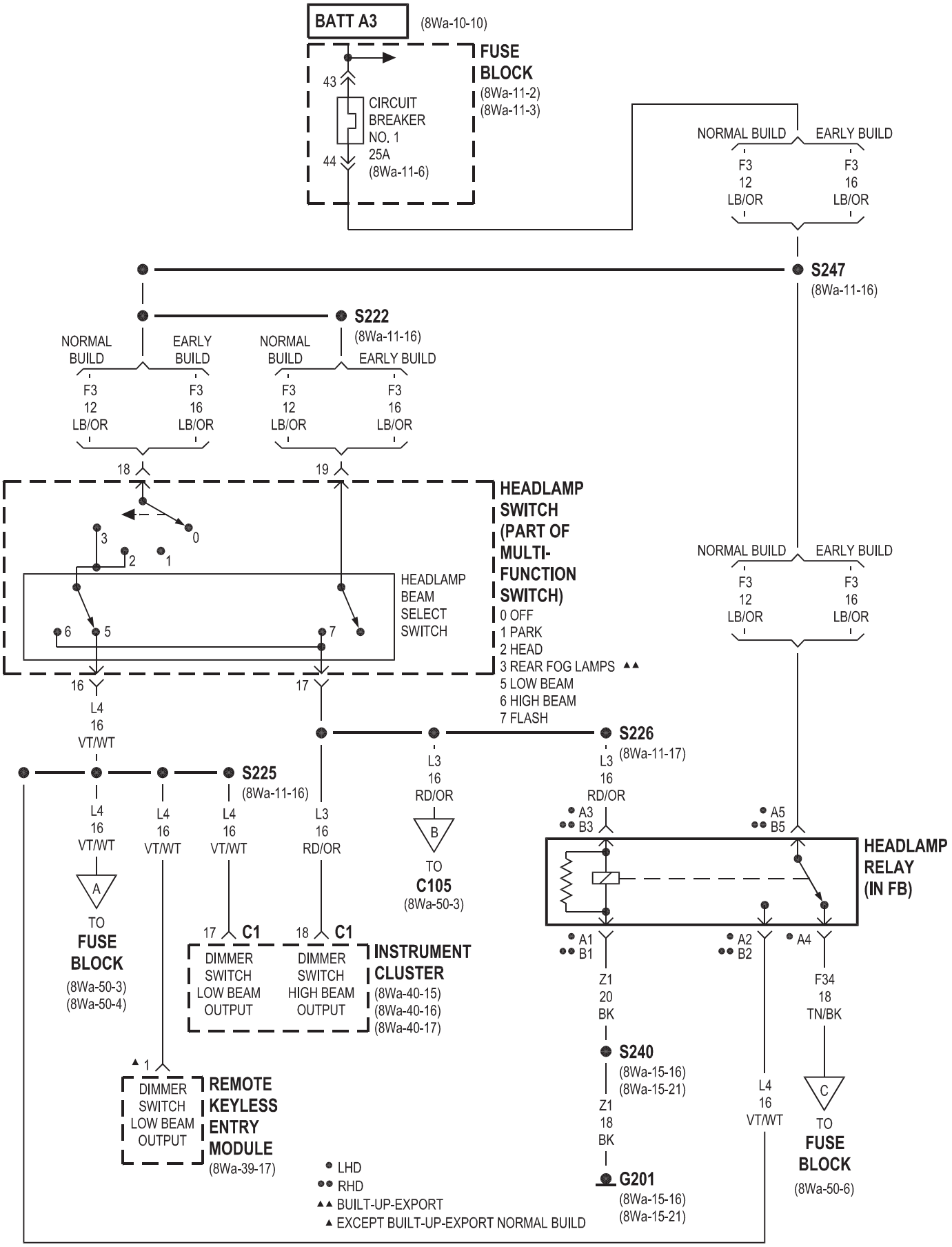
BATT A3
(8Wa-10-10)
FUSE BLOCK
(8Wa-11-2)
(8Wa-11-3)
43
CIRCUIT BREAKER NO. 1 25A
(8Wa-11-6)
44
NORMAL BUILD
EARLY BUILD
F3 12 LB/OR
F3 16 LB/OR
S247
(8Wa-11-16)
S222
(8Wa-11-16)
18
19
HEADLAMP SWITCH (PART OF MULTI-FUNCTION SWITCH)
0 OFF
1 PARK
2 HEAD
3 REAR FOG LAMPS ▲▲
5 LOW BEAM
6 HIGH BEAM
7 FLASH
HEADLAMP BEAM SELECT SWITCH
16
17
L4 16 VT/WT
S226
(8Wa-11-17)
L3 16 RD/OR
S225
(8Wa-11-16)
TO C105
(8Wa-50-3)
TO FUSE BLOCK
(8Wa-50-3)
(8Wa-50-4)
17 C1
18 C1
DIMMER SWITCH LOW BEAM OUTPUT
DIMMER SWITCH HIGH BEAM OUTPUT
INSTRUMENT CLUSTER
(8Wa-40-15)
(8Wa-40-16)
(8Wa-40-17)
HEADLAMP RELAY (IN FB)
A1 B1
A2 B2
A3 B3
A4
A5 B5
Z1 20 BK
F34 18 TN/BK
S240
(8Wa-15-16)
(8Wa-15-21)
Z1 18 BK
G201
(8Wa-15-16)
(8Wa-15-21)
L4 16 VT/WT
TO FUSE BLOCK
(8Wa-50-6)
▲ 1
DIMMER SWITCH LOW BEAM OUTPUT
REMOTE KEYLESS ENTRY MODULE
(8Wa-39-17)
● LHD
●● RHD
▲▲ BUILT-UP-EXPORT
▲ EXCEPT BUILT-UP-EXPORT NORMAL BUILD

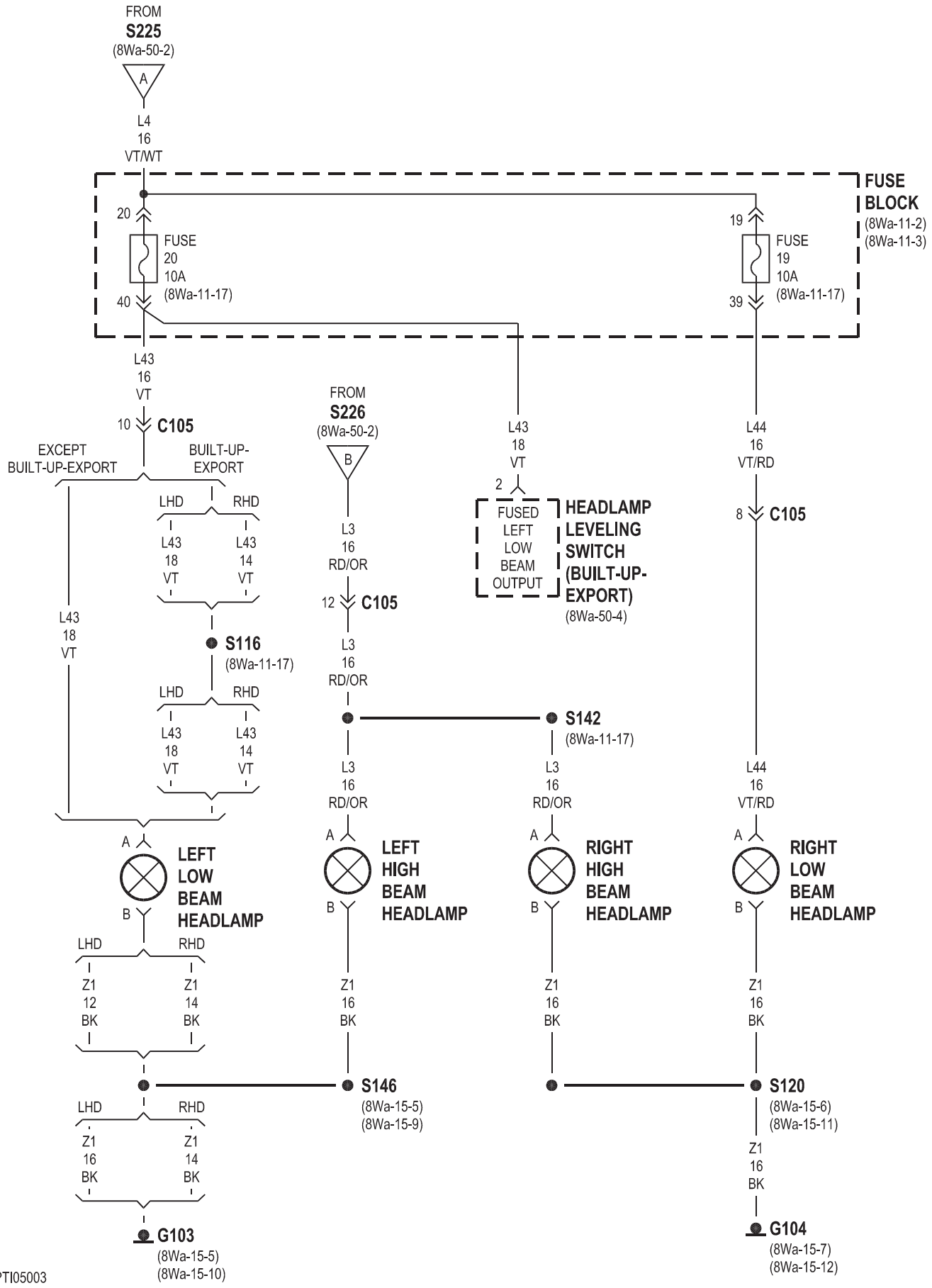
FROM
S225
(8Wa-50-2)
A
L4
16
VT/WT
FUSE BLOCK
(8Wa-11-2)
(8Wa-11-3)
20
FUSE
20
10A
(8Wa-11-17)
40
19
FUSE
19
10A
(8Wa-11-17)
39
L43
16
VT
10
C105
EXCEPT
BUILT-UP-EXPORT
BUILT-UP-
EXPORT
LHD
RHD
L43
18
VT
L43
14
VT
S116
(8Wa-11-17)
L43
18
VT
FROM
S226
(8Wa-50-2)
B
L3
16
RD/OR
12
C105
L3
16
RD/OR
S142
(8Wa-11-17)
L43
18
VT
2
FUSED
LEFT
LOW
BEAM
OUTPUT
HEADLAMP
LEVELING
SWITCH
(BUILT-UP-
EXPORT)
(8Wa-50-4)
L44
16
VT/RD
8
C105
A
B
LEFT
LOW
BEAM
HEADLAMP
LEFT
HIGH
BEAM
HEADLAMP
RIGHT
HIGH
BEAM
HEADLAMP
RIGHT
LOW
BEAM
HEADLAMP
Z1
12
BK
Z1
14
BK
Z1
16
BK
S146
(8Wa-15-5)
(8Wa-15-9)
S120
(8Wa-15-6)
(8Wa-15-11)
G103
(8Wa-15-5)
(8Wa-15-10)
G104
(8Wa-15-7)
(8Wa-15-12)

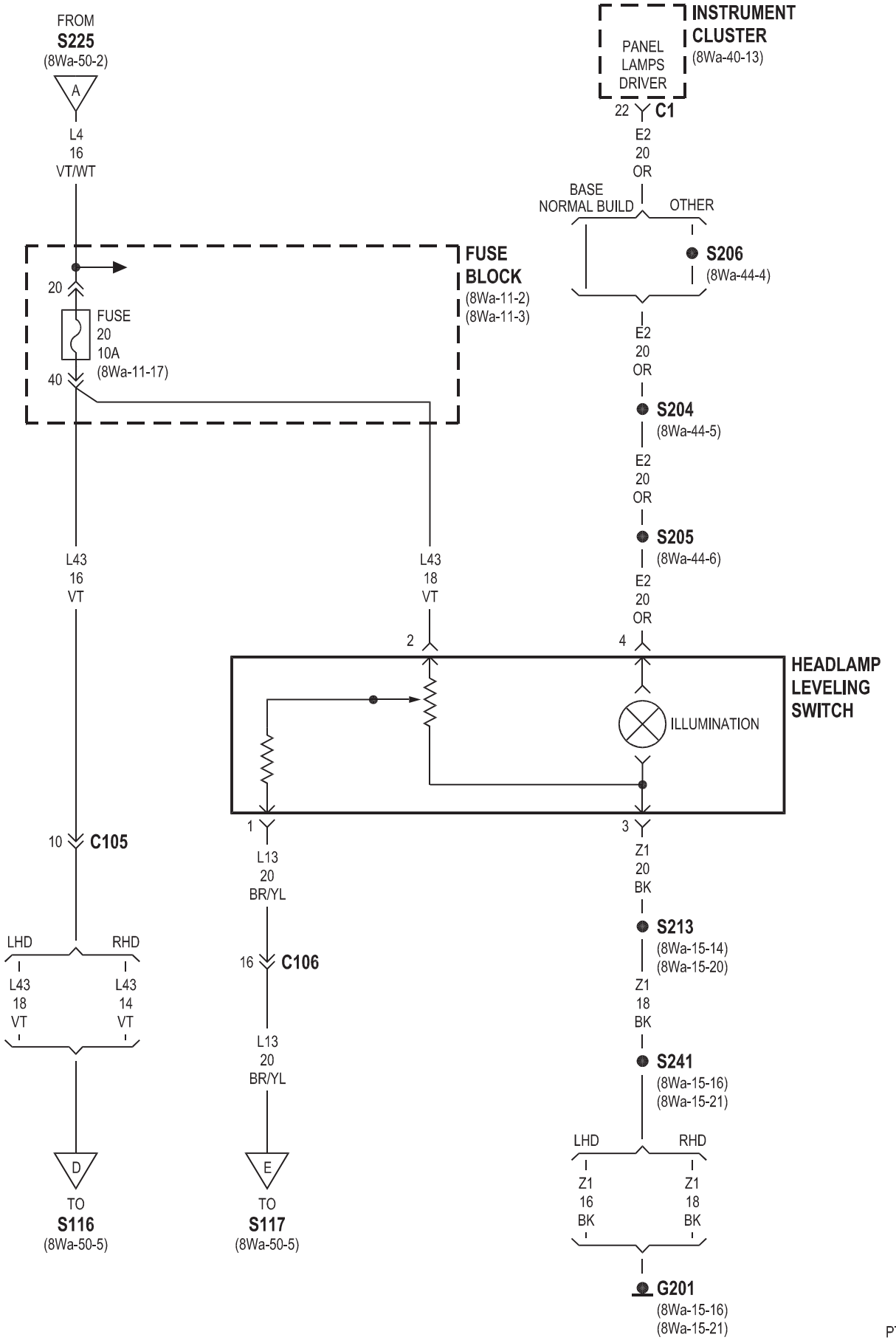
FROM
S225
(8Wa-50-2)
A
L4
16
VT/WT
INSTRUMENT CLUSTER
(8Wa-40-13)
PANEL LAMPS DRIVER
22
C1
E2
20
OR
BASE NORMAL BUILD
OTHER
S206
(8Wa-44-4)
FUSE BLOCK
(8Wa-11-2)
(8Wa-11-3)
20
FUSE
20
10A
(8Wa-11-17)
40
E2
20
OR
S204
(8Wa-44-5)
E2
20
OR
S205
(8Wa-44-6)
E2
20
OR
L43
16
VT
L43
18
VT
2
4
HEADLAMP LEVELING SWITCH
ILLUMINATION
1
3
10
C105
L13
20
BR/YL
Z1
20
BK
S213
(8Wa-15-14)
(8Wa-15-20)
LHD
RHD
L43
18
VT
L43
14
VT
16
C106
Z1
18
BK
L13
20
BR/YL
S241
(8Wa-15-16)
(8Wa-15-21)
LHD
RHD
Z1
16
BK
Z1
18
BK
D
E
TO
S116
(8Wa-50-5)
TO
S117
(8Wa-50-5)
G201
(8Wa-15-16)
(8Wa-15-21)

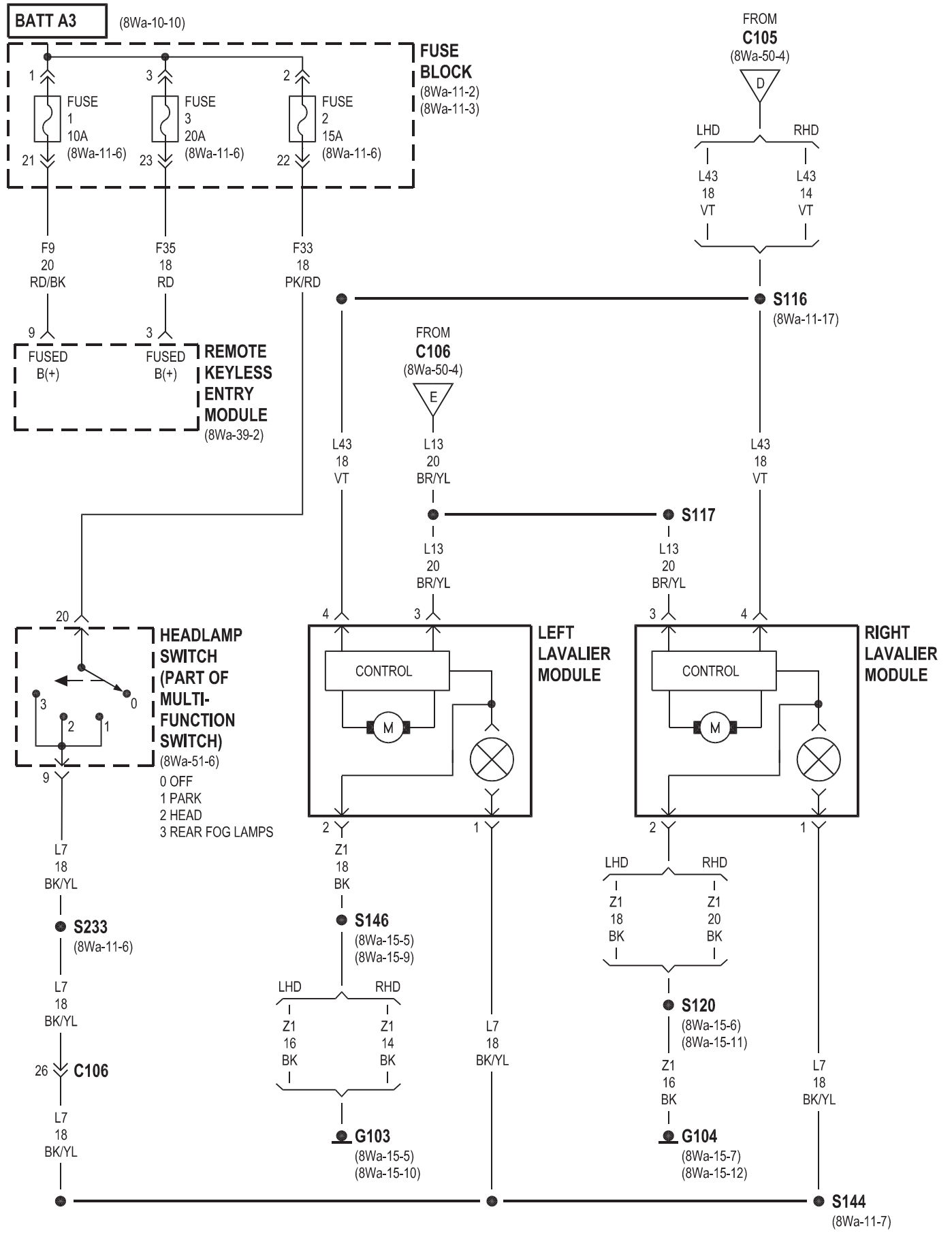
BATT A3
(8Wa-10-10)
FUSE BLOCK
(8Wa-11-2)
(8Wa-11-3)
FUSE 1 10A (8Wa-11-6)
FUSE 3 20A (8Wa-11-6)
FUSE 2 15A (8Wa-11-6)
F9 20 RD/BK
F35 18 RD
F33 18 PK/RD
FUSED B(+)
FUSED B(+)
REMOTE KEYLESS ENTRY MODULE
(8Wa-39-2)
FROM C105
(8Wa-50-4)
LHD
RHD
L43 18 VT
L43 14 VT
S116
(8Wa-11-17)
FROM C106
(8Wa-50-4)
L13 20 BR/YL
S117
HEADLAMP SWITCH (PART OF MULTI-FUNCTION SWITCH)
(8Wa-51-6)
0 OFF
1 PARK
2 HEAD
3 REAR FOG LAMPS
LEFT LAVALIER MODULE
RIGHT LAVALIER MODULE
CONTROL
L7 18 BK/YL
S233
(8Wa-11-6)
C106
Z1 18 BK
S146
(8Wa-15-5)
(8Wa-15-9)
Z1 16 BK
Z1 14 BK
G103
(8Wa-15-5)
(8Wa-15-10)
Z1 20 BK
S120
(8Wa-15-6)
(8Wa-15-11)
G104
(8Wa-15-7)
(8Wa-15-12)
S144
(8Wa-11-7)

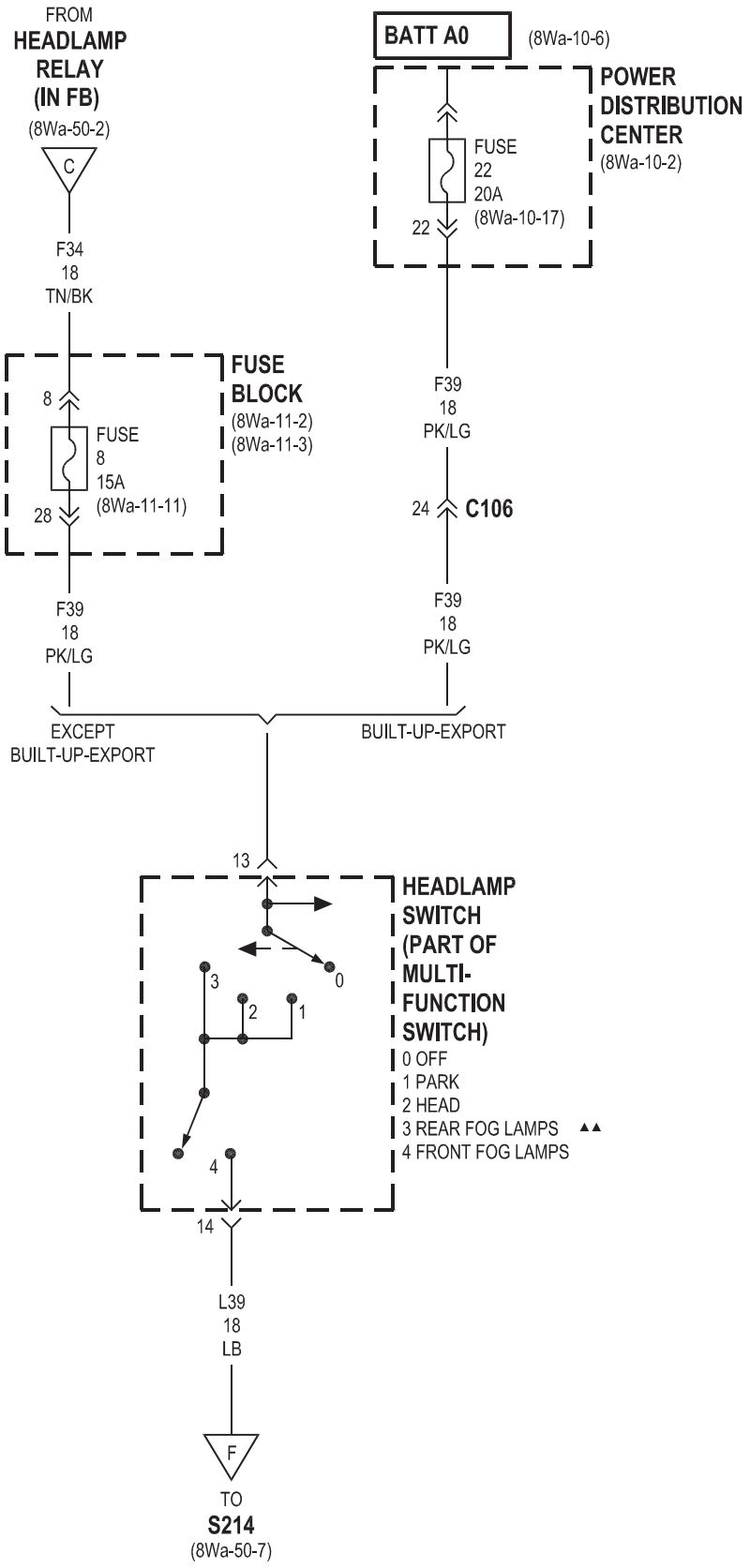

▲▲ BUILT-UP-EXPORT

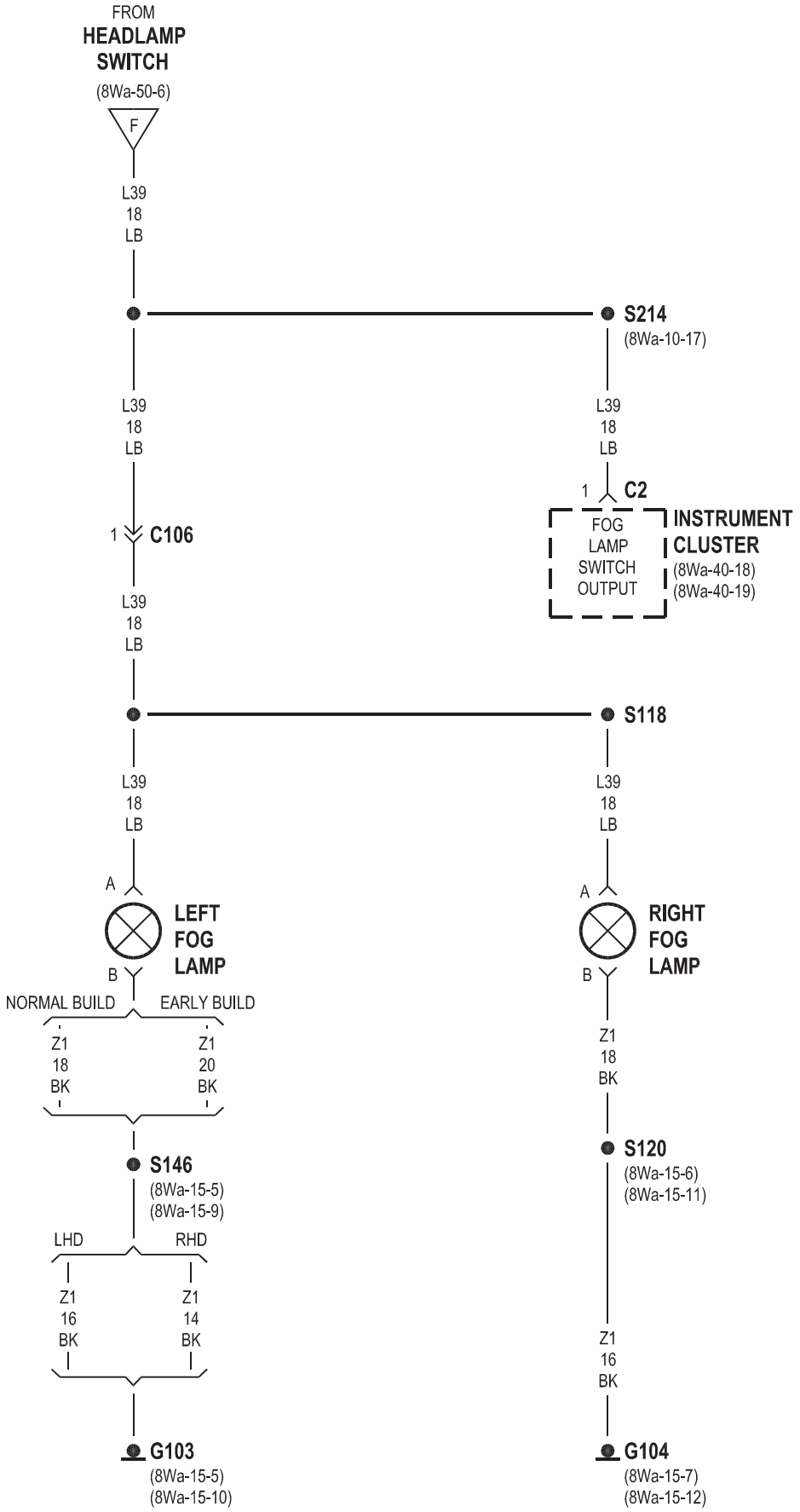
FROM
HEADLAMP
SWITCH
(8Wa-50-6)
F
L39
18
LB
S214
(8Wa-10-17)
L39
18
LB
1
C2
FOG
LAMP
SWITCH
OUTPUT
INSTRUMENT
CLUSTER
(8Wa-40-18)
(8Wa-40-19)
1
C106
L39
18
LB
S118
L39
18
LB
L39
18
LB
A
LEFT
FOG
LAMP
B
A
RIGHT
FOG
LAMP
B
NORMAL BUILD
EARLY BUILD
Z1
18
BK
Z1
20
BK
Z1
18
BK
S146
(8Wa-15-5)
(8Wa-15-9)
S120
(8Wa-15-6)
(8Wa-15-11)
LHD
RHD
Z1
16
BK
Z1
14
BK
Z1
16
BK
G103
(8Wa-15-5)
(8Wa-15-10)
G104
(8Wa-15-7)
(8Wa-15-12)

EXCEPT BUILT-UP-EXPORT

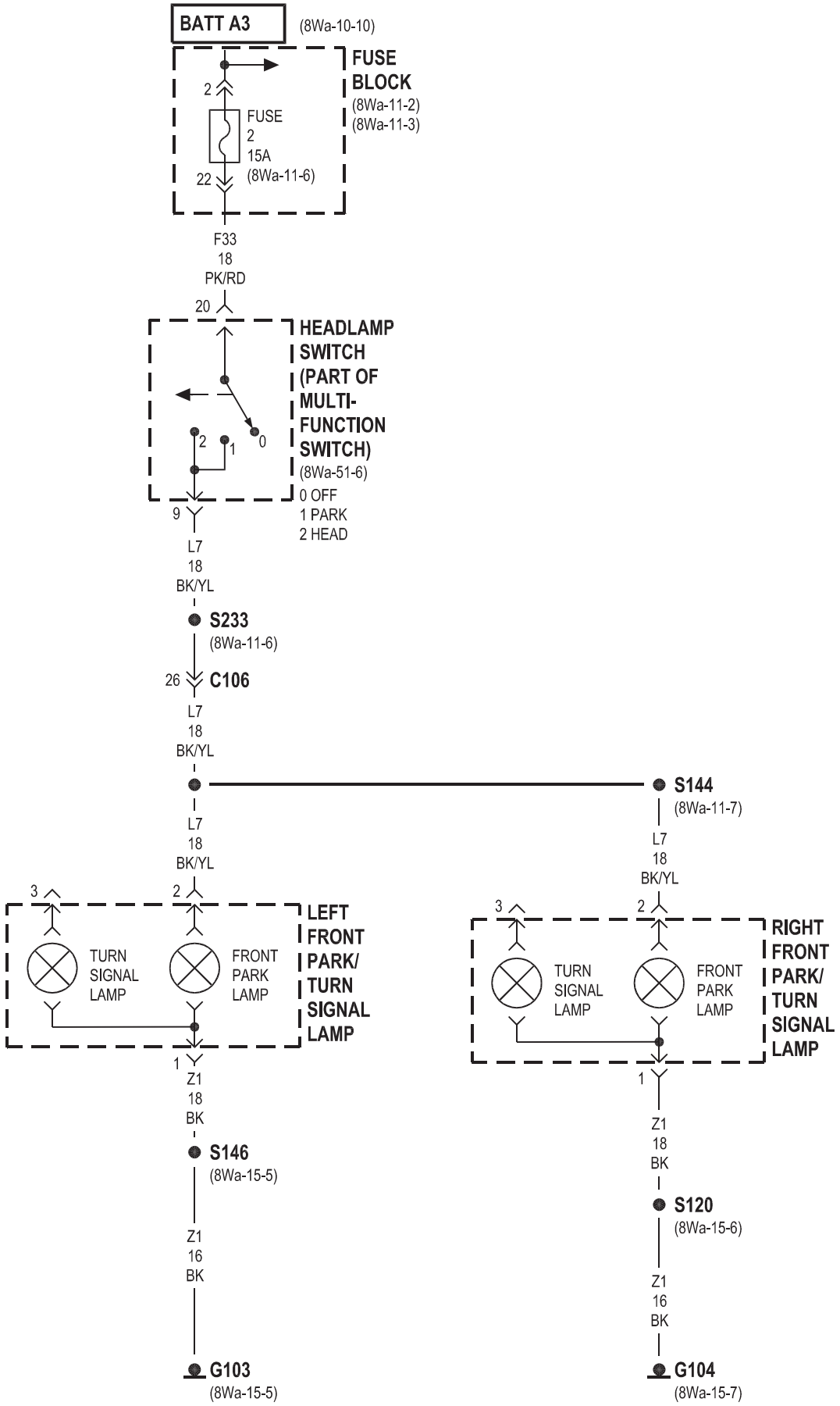

8W-51 REAR LIGHTING

Component	Page
Back-Up Lamp Switch	8Wa-51-2
Brake Lamp Switch	8Wa-51-4
Center High Mounted Stop Lamp	8Wa-51-5
Controller Antilock Brake	8Wa-51-4
Fuse 2 (FB)	8Wa-51-4, 6
Fuse 6 (FB)	8Wa-51-2
Fuse 8 (FB)	8Wa-51-2
Fuse 12 (PDC)	8Wa-51-4
Fuse 15 (FB)	8Wa-51-8
Fuse 19 (PDC)	8Wa-51-8
Fuse 22 (PDC)	8Wa-51-2
Fuse Block	8Wa-51-2, 4, 6, 8
G200	8Wa-51-8
G201	8Wa-51-8
G300	8Wa-51-5
G301	8Wa-51-5, 9
G302	8Wa-51-3, 5, 7, 9
Headlamp Relay	8Wa-51-2
Headlamp Switch	8Wa-51-2, 3, 4, 6
Instrument Cluster	8Wa-51-2
Left Back-Up Lamp	8Wa-51-3
Left License Lamp	8Wa-51-7
Left Rear Fog Lamp	8Wa-51-3
Left Rear Turn Signal Lamp	8Wa-51-9
Left Tail/Stop Lamp	8Wa-51-4, 5
License Lamp	8Wa-51-7
Multi- Function Switch	8Wa-51-8
Multi- Function Switch	8Wa-51-9
Power Distribution Center	8Wa-51-2
Power Distribution Center	8Wa-51-4
Power Distribution Center	8Wa-51-8
Right Back-Up Lamp	8Wa-51-3, 7
Right Rear Fog Lamp	8Wa-51-3
Right Rear Turn Signal Lamp	8Wa-51-9
Right Tail/Stop Lamp	8Wa-51-4, 5
Stop Lamp	8Wa-51-5
Tail Lamp	8Wa-51-5
Transmission Range Sensor	8Wa-51-2

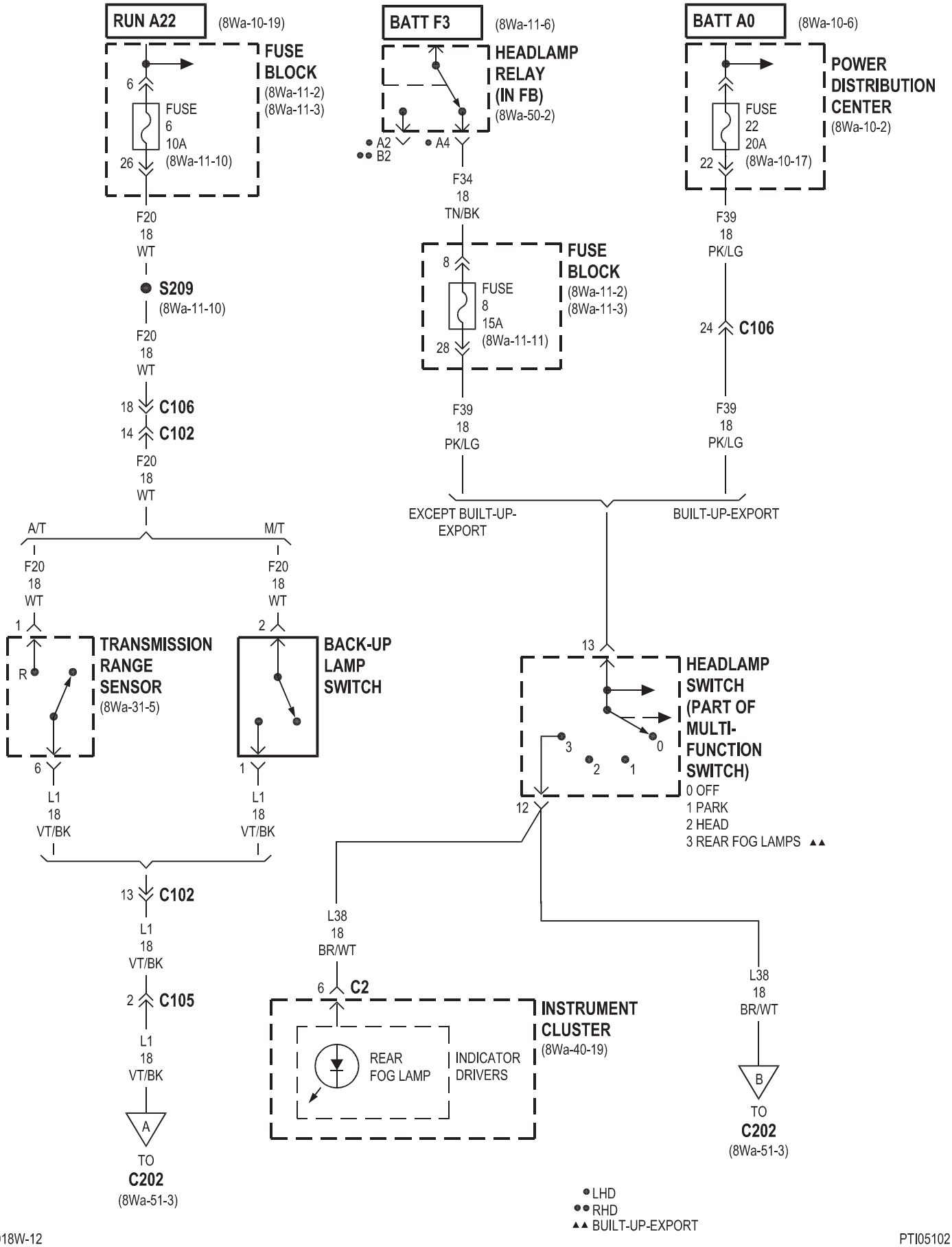
RUN A22
(8Wa-10-19)
FUSE BLOCK
(8Wa-11-2)
(8Wa-11-3)
6
FUSE 6 10A
(8Wa-11-10)
26
F20 18 WT
S209
(8Wa-11-10)
F20 18 WT
18 C106
14 C102
F20 18 WT
A/T
M/T
F20 18 WT
1
TRANSMISSION RANGE SENSOR
(8Wa-31-5)
R
6
L1 18 VT/BK
F20 18 WT
2
BACK-UP LAMP SWITCH
1
L1 18 VT/BK
13 C102
L1 18 VT/BK
2 C105
L1 18 VT/BK
A
TO C202
(8Wa-51-3)
BATT F3
(8Wa-11-6)
HEADLAMP RELAY (IN FB)
(8Wa-50-2)
A2
B2
A4
F34 18 TN/BK
FUSE BLOCK
(8Wa-11-2)
(8Wa-11-3)
8
FUSE 8 15A
(8Wa-11-11)
28
F39 18 PK/LG
EXCEPT BUILT-UP-EXPORT
BATT A0
(8Wa-10-6)
POWER DISTRIBUTION CENTER
(8Wa-10-2)
FUSE 22 20A
(8Wa-10-17)
22
F39 18 PK/LG
24 C106
F39 18 PK/LG
BUILT-UP-EXPORT
13
HEADLAMP SWITCH (PART OF MULTI-FUNCTION SWITCH)
0 OFF
1 PARK
2 HEAD
3 REAR FOG LAMPS ▲▲
3
2
1
0
12
L38 18 BR/WT
6 C2
INSTRUMENT CLUSTER
(8Wa-40-19)
REAR FOG LAMP
INDICATOR DRIVERS
L38 18 BR/WT
B
TO C202
(8Wa-51-3)
● LHD
●● RHD
▲▲ BUILT-UP-EXPORT

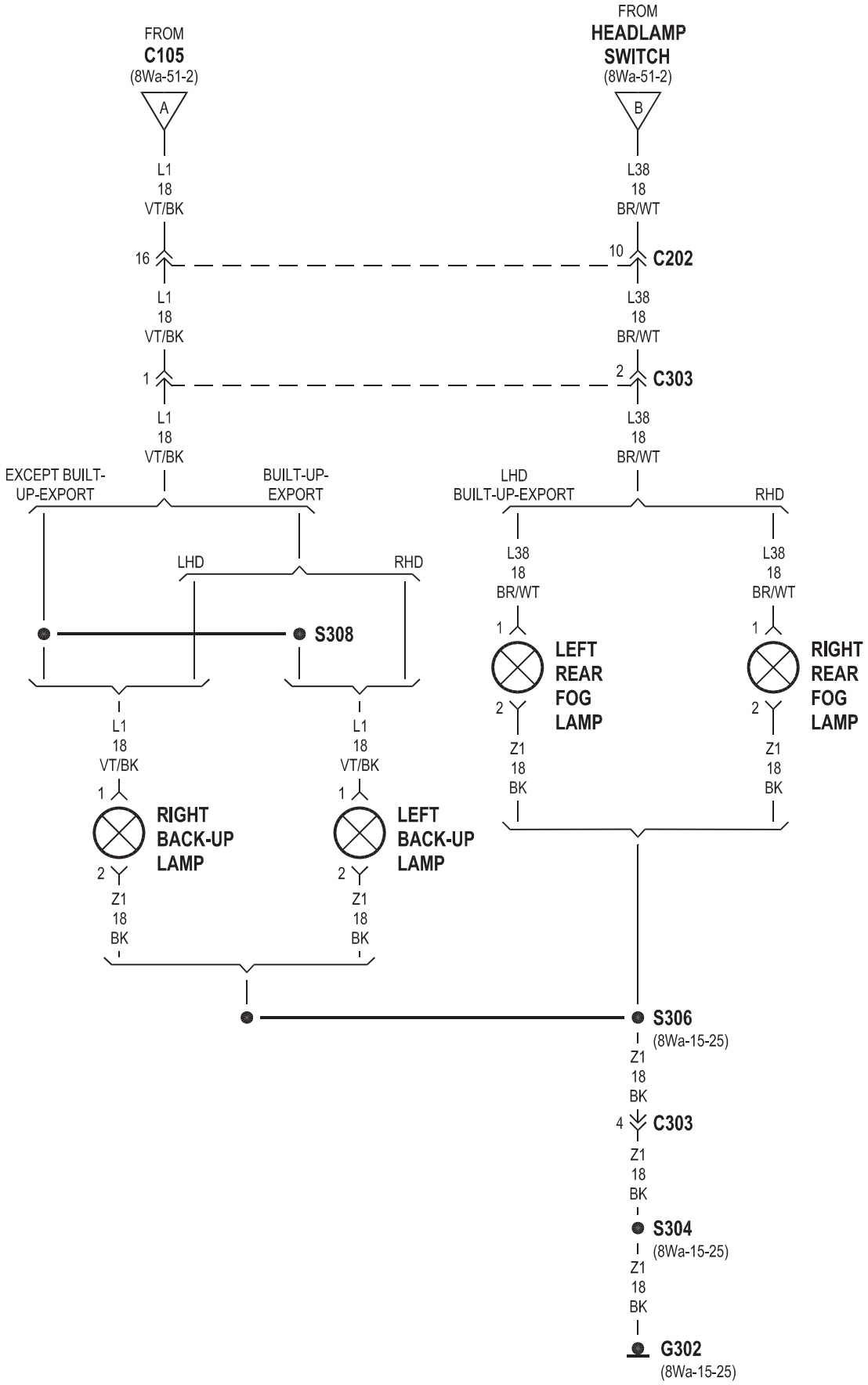
FROM
C105
(8Wa-51-2)
A
L1
18
VT/BK
16
L1
18
VT/BK
1
L1
18
VT/BK
FROM
HEADLAMP
SWITCH
(8Wa-51-2)
B
L38
18
BR/WT
10
C202
L38
18
BR/WT
2
C303
L38
18
BR/WT
EXCEPT BUILT-UP-EXPORT
BUILT-UP-EXPORT
LHD
RHD
S308
L1
18
VT/BK
1
RIGHT BACK-UP LAMP
2
Z1
18
BK
L1
18
VT/BK
1
LEFT BACK-UP LAMP
2
Z1
18
BK
LHD
BUILT-UP-EXPORT
RHD
L38
18
BR/WT
1
LEFT REAR FOG LAMP
2
Z1
18
BK
L38
18
BR/WT
1
RIGHT REAR FOG LAMP
2
Z1
18
BK
S306
(8Wa-15-25)
Z1
18
BK
4
C303
Z1
18
BK
S304
(8Wa-15-25)
Z1
18
BK
G302
(8Wa-15-25)

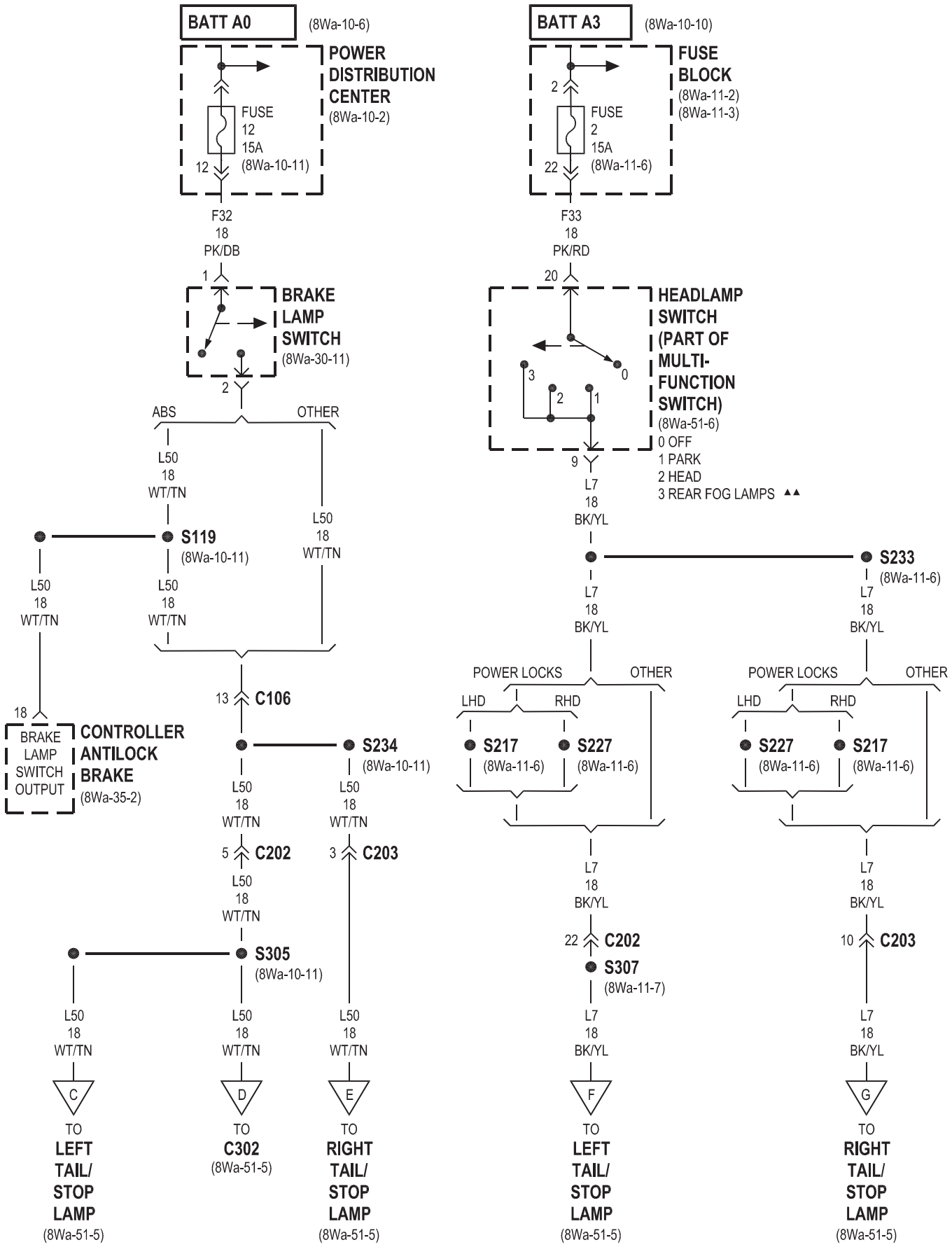

▲▲ BUILT-UP-EXPORT

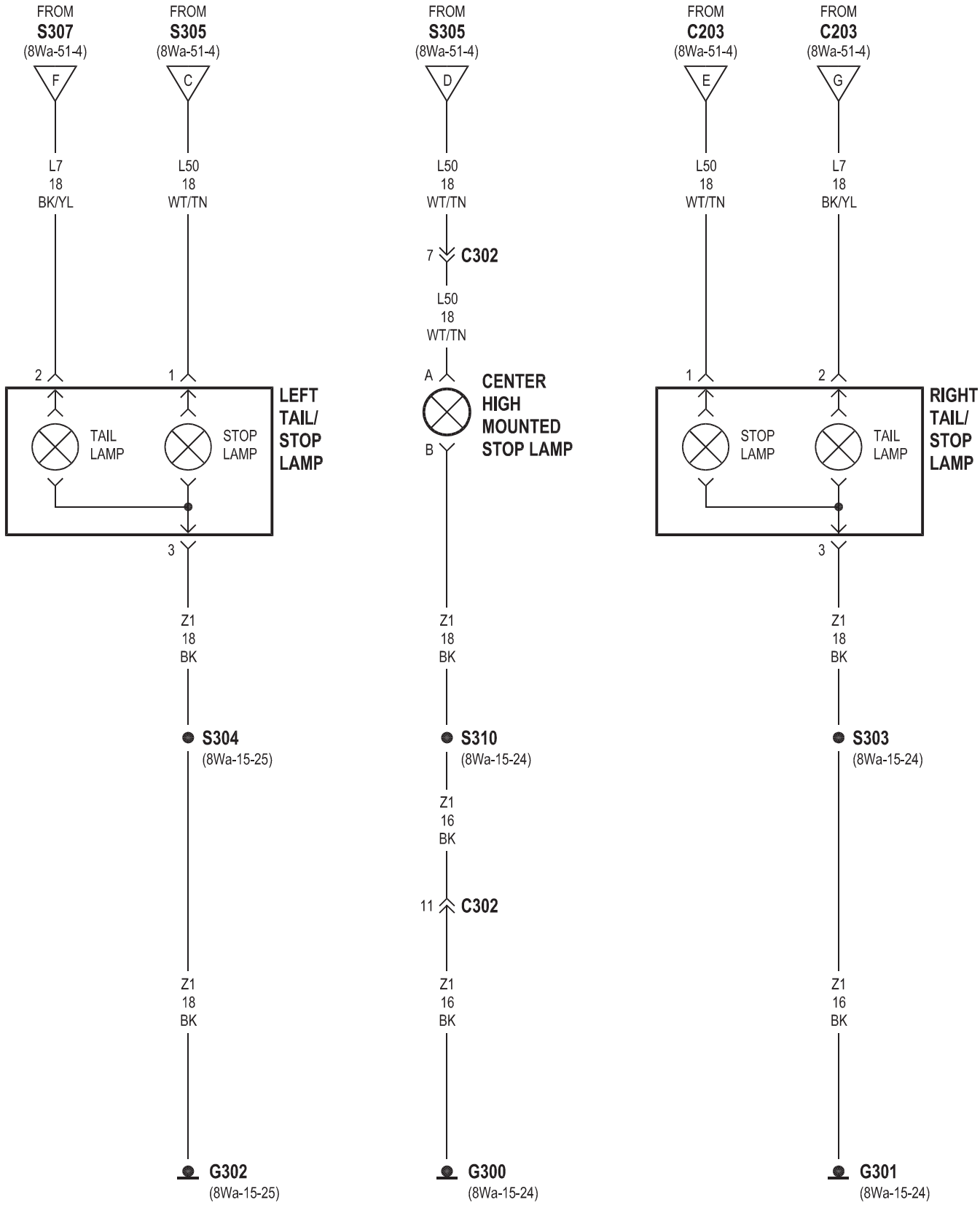
FROM
S307
(8Wa-51-4)
F
L7
18
BK/YL
FROM
S305
(8Wa-51-4)
C
L50
18
WT/TN
2
1
TAIL
LAMP
STOP
LAMP
LEFT
TAIL/
STOP
LAMP
3
Z1
18
BK
S304
(8Wa-15-25)
Z1
18
BK
G302
(8Wa-15-25)
FROM
S305
(8Wa-51-4)
D
L50
18
WT/TN
7
C302
L50
18
WT/TN
A
B
CENTER
HIGH
MOUNTED
STOP LAMP
Z1
18
BK
S310
(8Wa-15-24)
Z1
16
BK
11
C302
Z1
16
BK
G300
(8Wa-15-24)
FROM
C203
(8Wa-51-4)
E
L50
18
WT/TN
FROM
C203
(8Wa-51-4)
G
L7
18
BK/YL
1
2
STOP
LAMP
TAIL
LAMP
RIGHT
TAIL/
STOP
LAMP
3
Z1
18
BK
S303
(8Wa-15-24)
Z1
16
BK
G301
(8Wa-15-24)

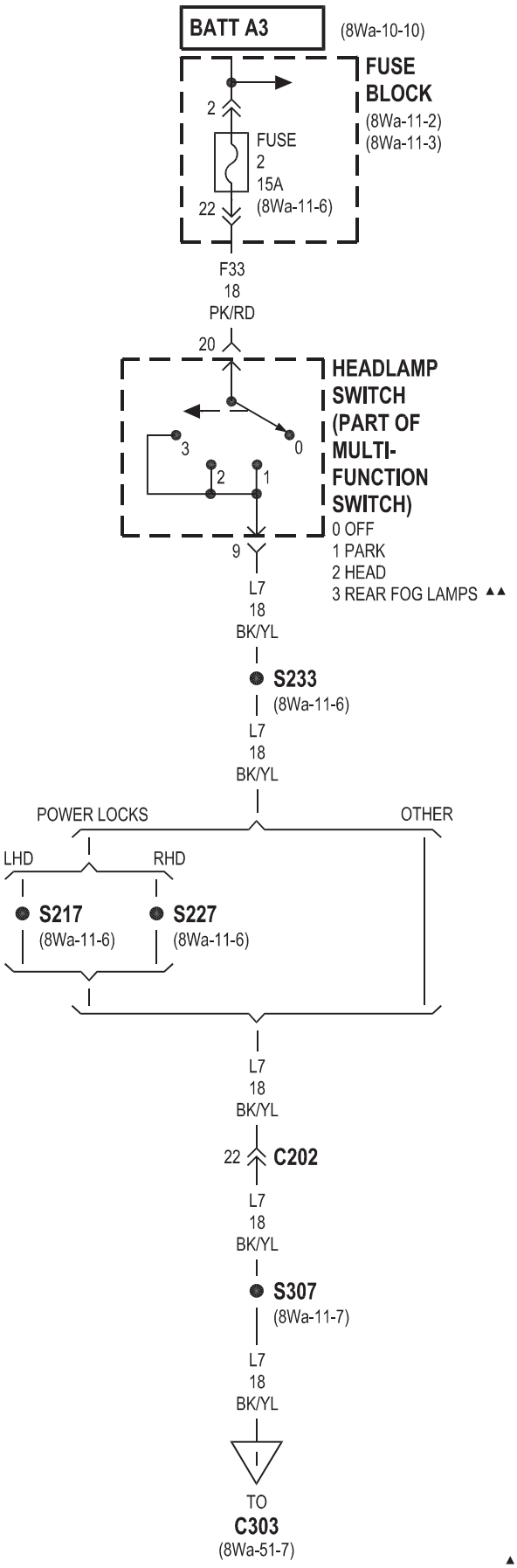

▲▲ BUILT-UP-EXPORT

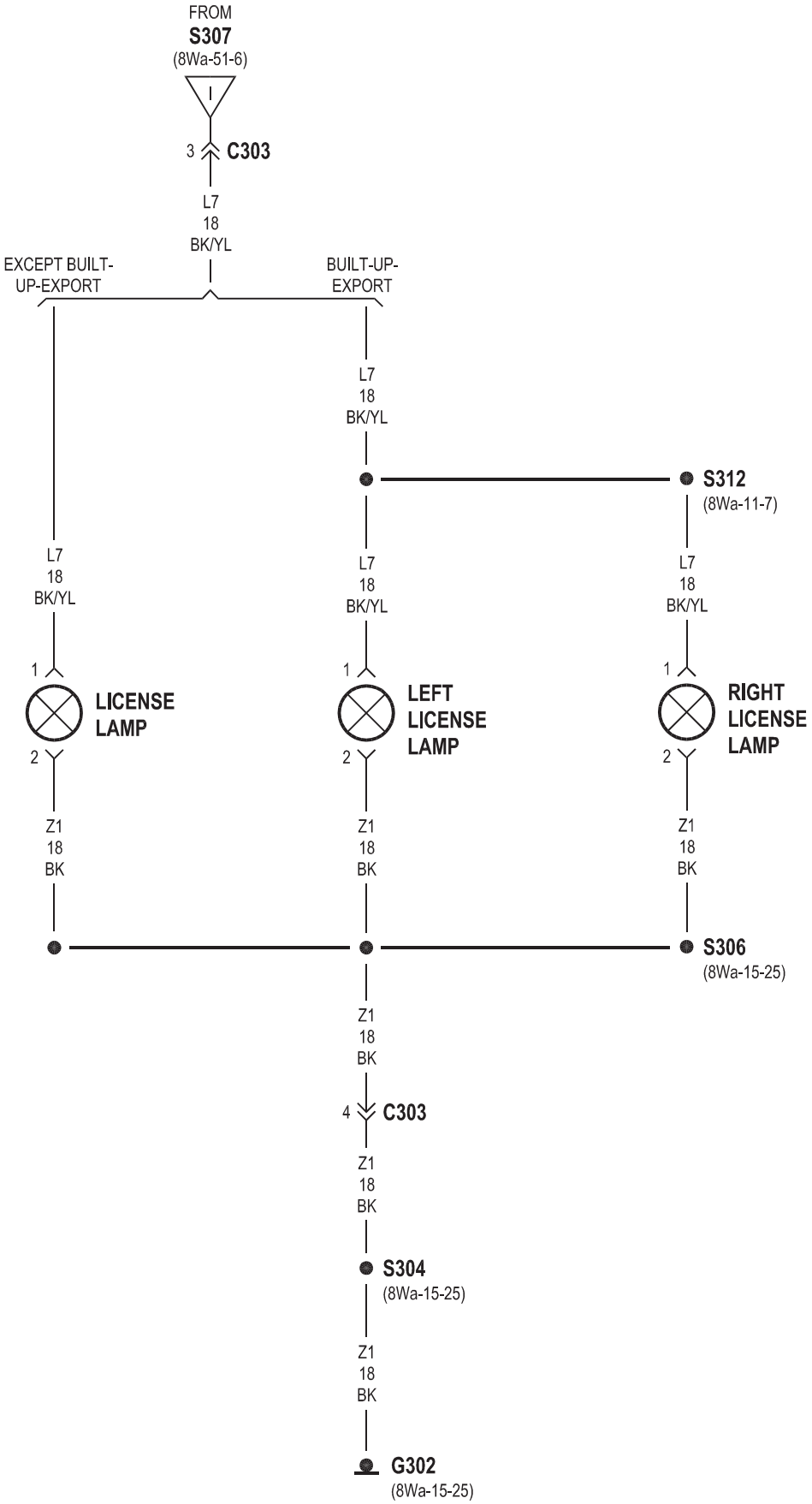
FROM
S307
(8Wa-51-6)
3
C303
L7
18
BK/YL
EXCEPT BUILT-UP-EXPORT
BUILT-UP-EXPORT
L7
18
BK/YL
S312
(8Wa-11-7)
L7
18
BK/YL
L7
18
BK/YL
L7
18
BK/YL
1
LICENSE LAMP
2
1
LEFT LICENSE LAMP
2
1
RIGHT LICENSE LAMP
2
Z1
18
BK
Z1
18
BK
Z1
18
BK
S306
(8Wa-15-25)
Z1
18
BK
4
C303
Z1
18
BK
S304
(8Wa-15-25)
Z1
18
BK
G302
(8Wa-15-25)

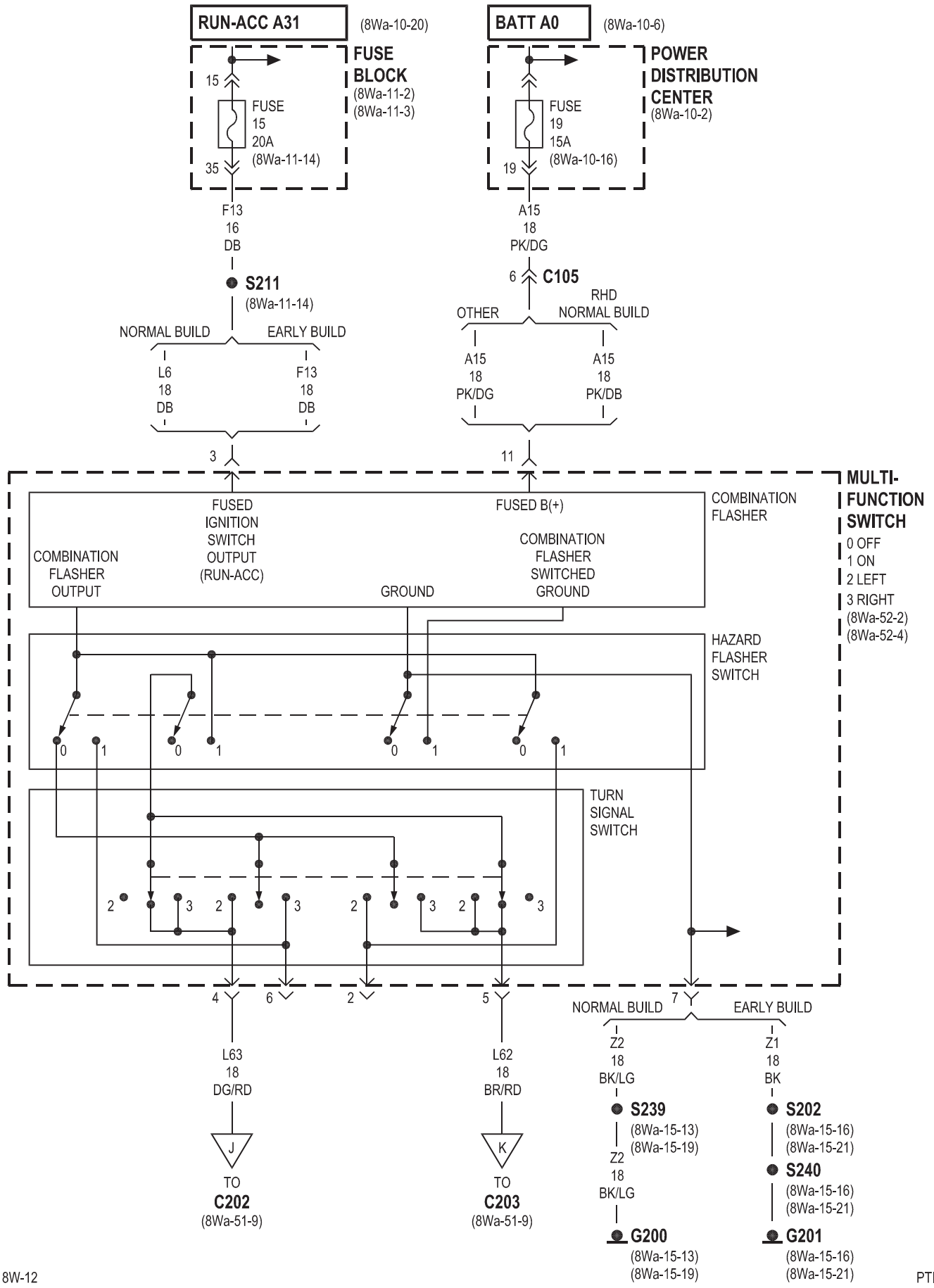
RUN-ACC A31
(8Wa-10-20)
BATT A0
(8Wa-10-6)
FUSE BLOCK
(8Wa-11-2)
(8Wa-11-3)
15
FUSE 15 20A
(8Wa-11-14)
35
POWER DISTRIBUTION CENTER
(8Wa-10-2)
FUSE 19 15A
(8Wa-10-16)
19
F13 16 DB
A15 18 PK/DG
S211
(8Wa-11-14)
6
C105
NORMAL BUILD
EARLY BUILD
OTHER
RHD NORMAL BUILD
L6 18 DB
F13 18 DB
A15 18 PK/DG
A15 18 PK/DB
3
11
MULTI-FUNCTION SWITCH
0 OFF
1 ON
2 LEFT
3 RIGHT
(8Wa-52-2)
(8Wa-52-4)
COMBINATION FLASHER
FUSED IGNITION SWITCH OUTPUT (RUN-ACC)
FUSED B(+)
COMBINATION FLASHER OUTPUT
GROUND
COMBINATION FLASHER SWITCHED GROUND
HAZARD FLASHER SWITCH
TURN SIGNAL SWITCH
4
6
2
5
7
L63 18 DG/RD
L62 18 BR/RD
Z2 18 BK/LG
Z1 18 BK
S239
(8Wa-15-13)
(8Wa-15-19)
S202
(8Wa-15-16)
(8Wa-15-21)
S240
(8Wa-15-16)
(8Wa-15-21)
G200
(8Wa-15-13)
(8Wa-15-19)
G201
(8Wa-15-16)
(8Wa-15-21)
J
K
TO C202
(8Wa-51-9)
TO C203
(8Wa-51-9)

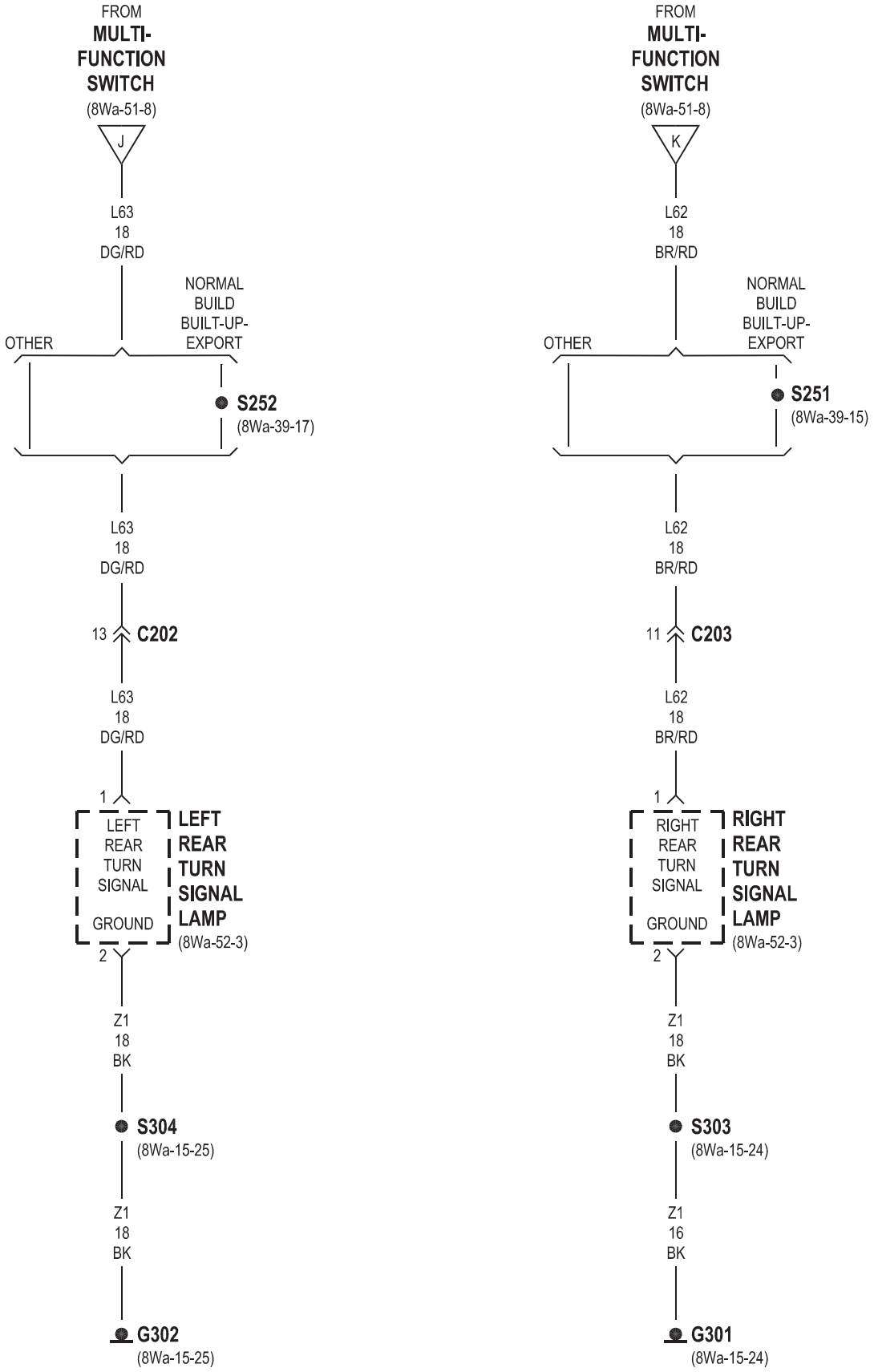
FROM
MULTI-
FUNCTION
SWITCH
(8Wa-51-8)
J
L63
18
DG/RD
OTHER
NORMAL
BUILD
BUILT-UP-
EXPORT
S252
(8Wa-39-17)
L63
18
DG/RD
13
C202
L63
18
DG/RD
1
LEFT
REAR
TURN
SIGNAL
GROUND
2
LEFT
REAR
TURN
SIGNAL
LAMP
(8Wa-52-3)
Z1
18
BK
S304
(8Wa-15-25)
Z1
18
BK
G302
(8Wa-15-25)
FROM
MULTI-
FUNCTION
SWITCH
(8Wa-51-8)
K
L62
18
BR/RD
OTHER
NORMAL
BUILD
BUILT-UP-
EXPORT
S251
(8Wa-39-15)
L62
18
BR/RD
11
C203
L62
18
BR/RD
1
RIGHT
REAR
TURN
SIGNAL
GROUND
2
RIGHT
REAR
TURN
SIGNAL
LAMP
(8Wa-52-3)
Z1
18
BK
S303
(8Wa-15-24)
Z1
16
BK
G301
(8Wa-15-24)

2001 PT CRUISER

8W-52 TURN SIGNALS

Component	Page
Fuse 15 (FB)	8Wa-52-4
Fuse 19 (PDC)	8Wa-52-4
Fuse Block	8Wa-52-4
G103	8Wa-52-3, 5
G104	8Wa-52-3, 5
G200	8Wa-52-4
G201	8Wa-52-4, 5
G301	8Wa-52-3
G302	8Wa-52-3
Instrument Cluster	8Wa-52-2, 4, 5
Left Front Park/Turn Signal Lamp	8Wa-52-2, 3
Left Front Side Marker	8Wa-52-5
Left Rear Turn Signal Lamp	8Wa-52-2, 3
Left Turn Signal Indicator	8Wa-52-5
Multi- Function Switch	8Wa-52-2, 4, 5
Power Distribution Center	8Wa-52-4
Right Front Park/Turn Signal Lamp	8Wa-52-2, 3
Right Front Side Marker	8Wa-52-5
Right Rear Turn Signal Lamp	8Wa-52-2, 3
Right Turn Signal Indicator	8Wa-52-5
Turn Signal Lamp	8Wa-52-3

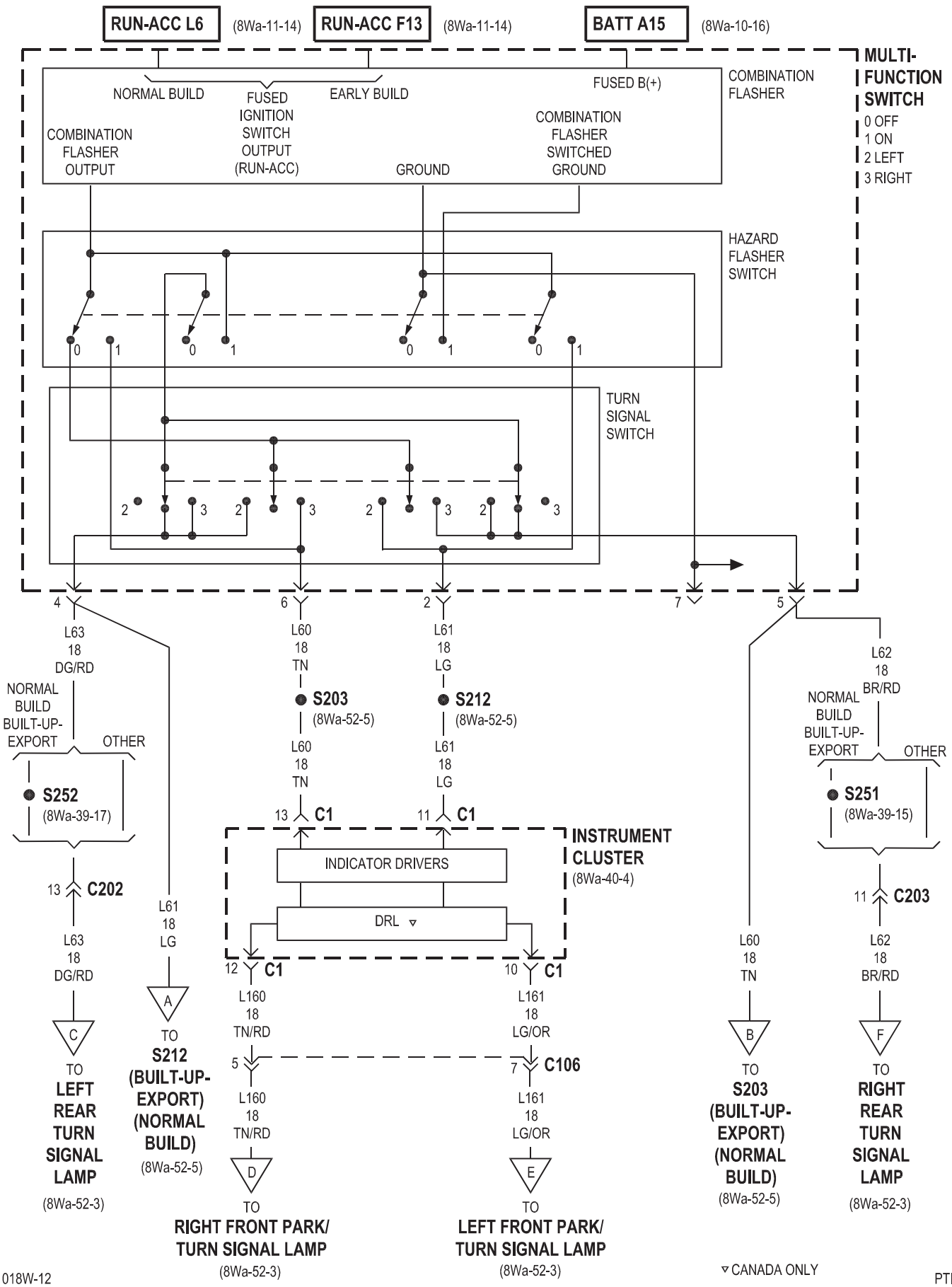
RUN-ACC L6
(8Wa-11-14)
RUN-ACC F13
(8Wa-11-14)
BATT A15
(8Wa-10-16)
MULTI-FUNCTION SWITCH
0 OFF
1 ON
2 LEFT
3 RIGHT
COMBINATION FLASHER
NORMAL BUILD
FUSED IGNITION SWITCH OUTPUT (RUN-ACC)
EARLY BUILD
FUSED B(+)
COMBINATION FLASHER OUTPUT
GROUND
COMBINATION FLASHER SWITCHED GROUND
HAZARD FLASHER SWITCH
TURN SIGNAL SWITCH
L63 18 DG/RD
L60 18 TN
L61 18 LG
L62 18 BR/RD
NORMAL BUILD BUILT-UP-EXPORT
OTHER
S203
(8Wa-52-5)
S212
(8Wa-52-5)
S252
(8Wa-39-17)
S251
(8Wa-39-15)
C1
C202
C203
INSTRUMENT CLUSTER
(8Wa-40-4)
INDICATOR DRIVERS
DRL ▿
L160 18 TN/RD
L161 18 LG/OR
C106
TO LEFT REAR TURN SIGNAL LAMP
(8Wa-52-3)
TO S212 (BUILT-UP-EXPORT) (NORMAL BUILD)
(8Wa-52-5)
TO RIGHT FRONT PARK/ TURN SIGNAL LAMP
(8Wa-52-3)
TO LEFT FRONT PARK/ TURN SIGNAL LAMP
(8Wa-52-3)
TO S203 (BUILT-UP-EXPORT) (NORMAL BUILD)
(8Wa-52-5)
TO RIGHT REAR TURN SIGNAL LAMP
(8Wa-52-3)

▿ CANADA ONLY

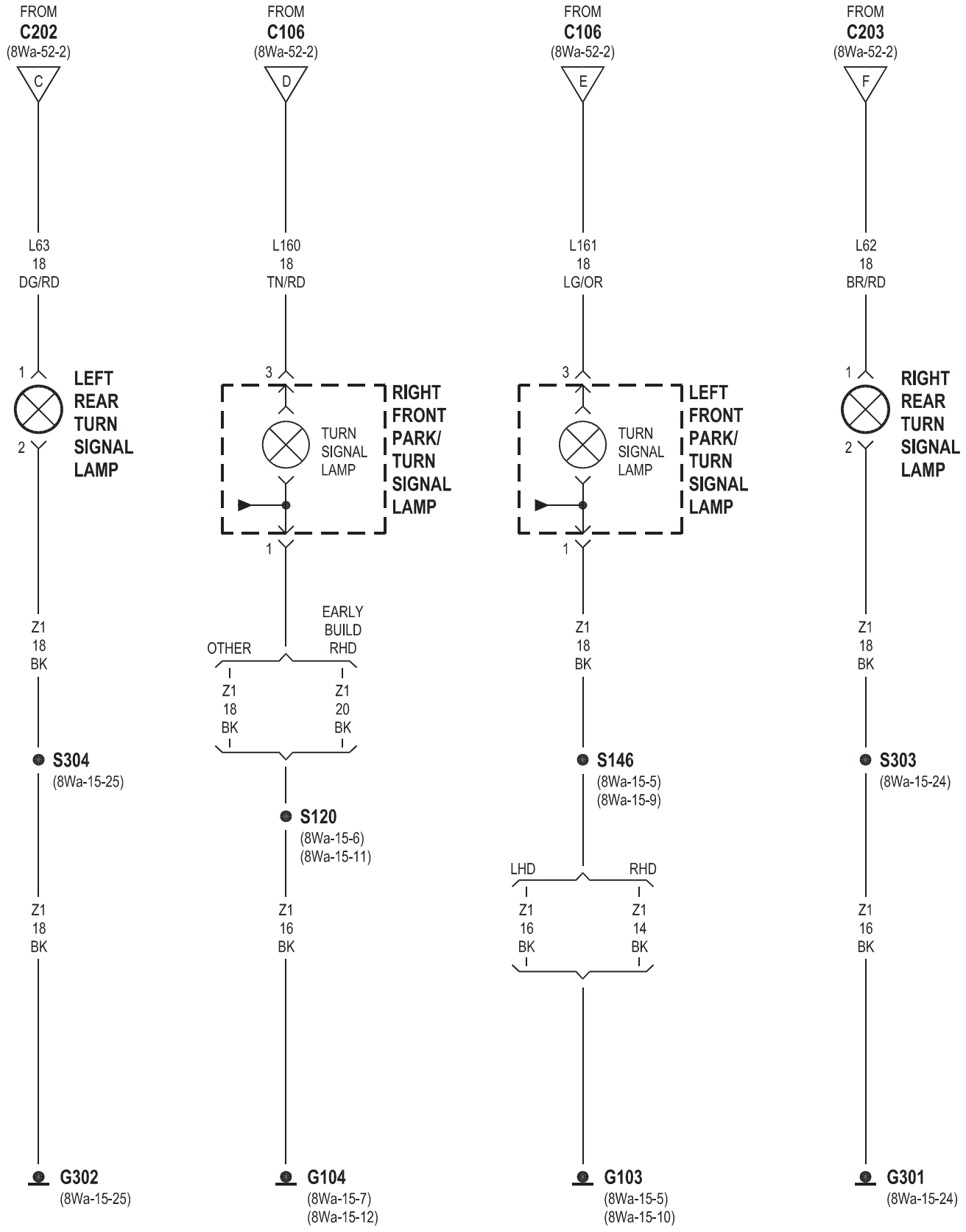
FROM
C202
(8Wa-52-2)
C
L63
18
DG/RD
1
2
LEFT
REAR
TURN
SIGNAL
LAMP
Z1
18
BK
S304
(8Wa-15-25)
Z1
18
BK
G302
(8Wa-15-25)
FROM
C106
(8Wa-52-2)
D
L160
18
TN/RD
3
TURN
SIGNAL
LAMP
RIGHT
FRONT
PARK/
TURN
SIGNAL
LAMP
1
OTHER
EARLY
BUILD
RHD
Z1
18
BK
Z1
20
BK
S120
(8Wa-15-6)
(8Wa-15-11)
Z1
16
BK
G104
(8Wa-15-7)
(8Wa-15-12)
FROM
C106
(8Wa-52-2)
E
L161
18
LG/OR
3
TURN
SIGNAL
LAMP
LEFT
FRONT
PARK/
TURN
SIGNAL
LAMP
1
Z1
18
BK
S146
(8Wa-15-5)
(8Wa-15-9)
LHD
RHD
Z1
16
BK
Z1
14
BK
G103
(8Wa-15-5)
(8Wa-15-10)
FROM
C203
(8Wa-52-2)
F
L62
18
BR/RD
1
2
RIGHT
REAR
TURN
SIGNAL
LAMP
Z1
18
BK
S303
(8Wa-15-24)
Z1
16
BK
G301
(8Wa-15-24)

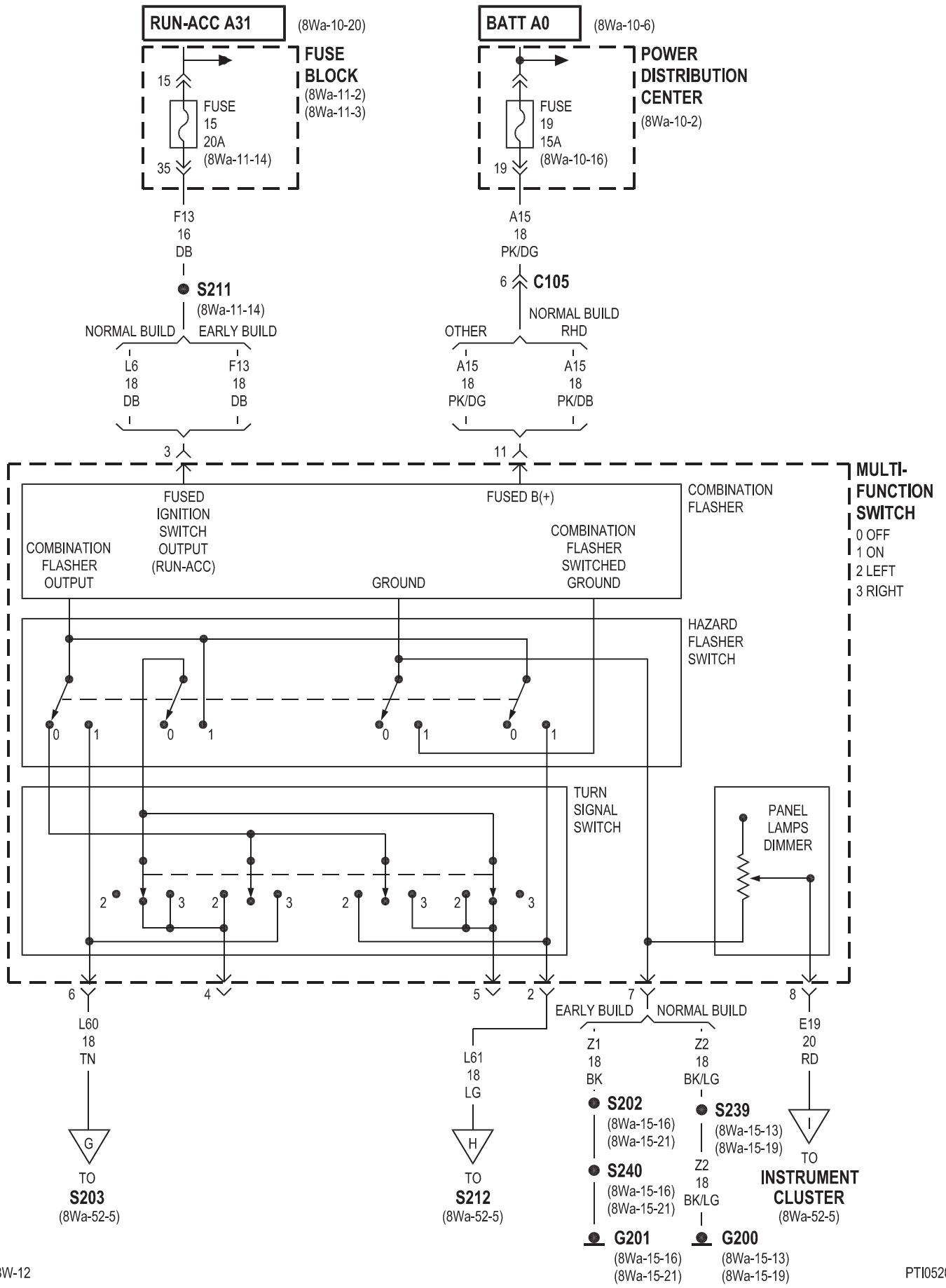
RUN-ACC A31
(8Wa-10-20)
FUSE BLOCK
(8Wa-11-2)
(8Wa-11-3)
15
FUSE 15 20A
(8Wa-11-14)
35
F13 16 DB
S211
(8Wa-11-14)
NORMAL BUILD
EARLY BUILD
L6 18 DB
F13 18 DB
3
BATT A0
(8Wa-10-6)
POWER DISTRIBUTION CENTER
(8Wa-10-2)
FUSE 19 15A
(8Wa-10-16)
19
A15 18 PK/DG
6
C105
OTHER
NORMAL BUILD RHD
A15 18 PK/DG
A15 18 PK/DB
11
MULTI-FUNCTION SWITCH
0 OFF
1 ON
2 LEFT
3 RIGHT
COMBINATION FLASHER
FUSED IGNITION SWITCH OUTPUT (RUN-ACC)
FUSED B(+)
COMBINATION FLASHER OUTPUT
GROUND
COMBINATION FLASHER SWITCHED GROUND
HAZARD FLASHER SWITCH
TURN SIGNAL SWITCH
PANEL LAMPS DIMMER
6
4
5
2
7
8
EARLY BUILD
NORMAL BUILD
L60 18 TN
L61 18 LG
Z1 18 BK
Z2 18 BK/LG
E19 20 RD
S202
(8Wa-15-16)
(8Wa-15-21)
S239
(8Wa-15-13)
(8Wa-15-19)
S240
(8Wa-15-16)
(8Wa-15-21)
Z2 18 BK/LG
G201
(8Wa-15-16)
(8Wa-15-21)
G200
(8Wa-15-13)
(8Wa-15-19)
G
TO S203
(8Wa-52-5)
H
TO S212
(8Wa-52-5)
I
TO INSTRUMENT CLUSTER
(8Wa-52-5)

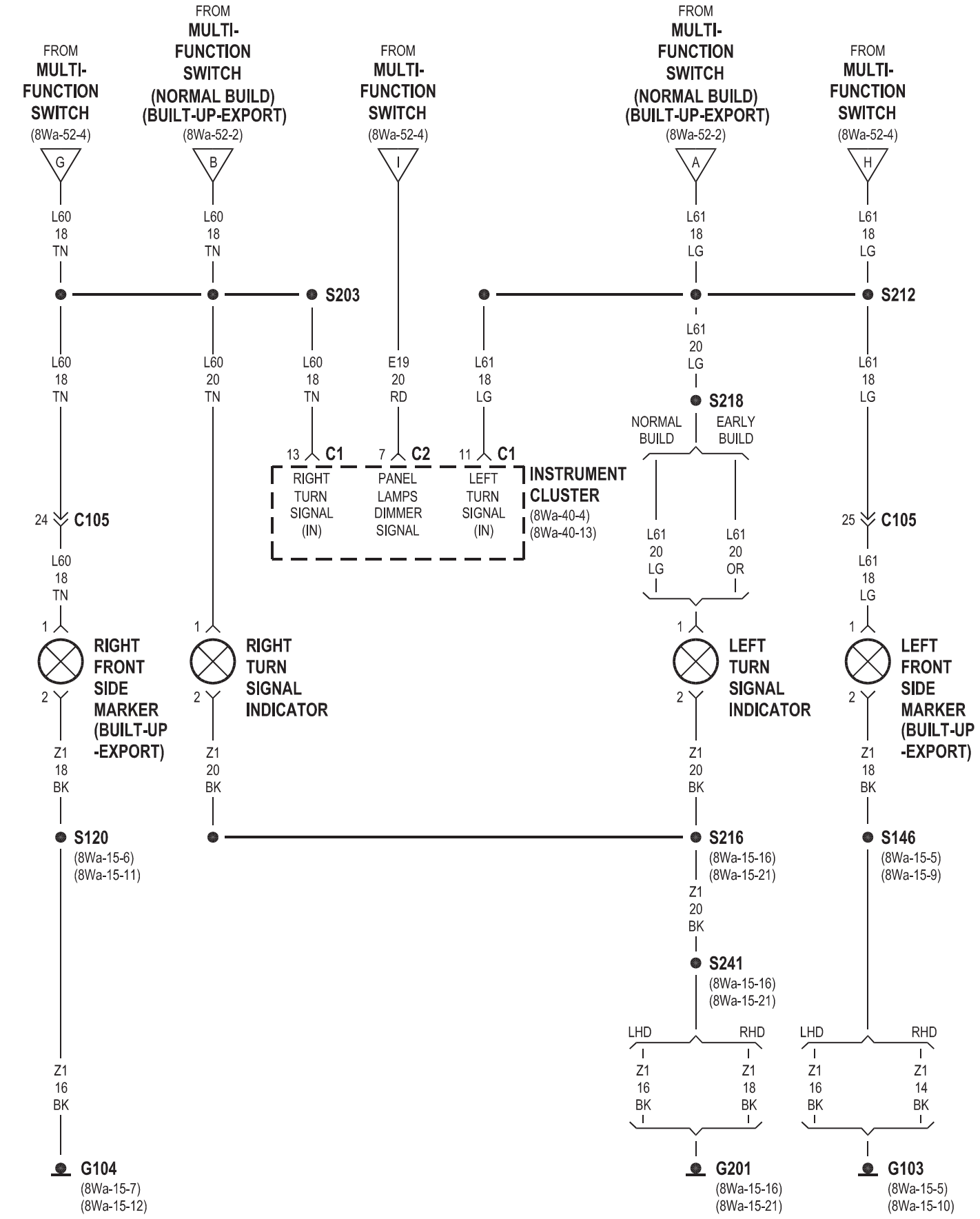
FROM MULTI-FUNCTION SWITCH (8Wa-52-4)
FROM MULTI-FUNCTION SWITCH (NORMAL BUILD) (BUILT-UP-EXPORT) (8Wa-52-2)
FROM MULTI-FUNCTION SWITCH (8Wa-52-4)
FROM MULTI-FUNCTION SWITCH (NORMAL BUILD) (BUILT-UP-EXPORT) (8Wa-52-2)
FROM MULTI-FUNCTION SWITCH (8Wa-52-4)
G
B
I
A
H
L60 18 TN
L60 18 TN
L61 18 LG
L61 18 LG
S203
S212
L60 18 TN
L60 20 TN
L60 18 TN
E19 20 RD
L61 18 LG
L61 20 LG
S218
NORMAL BUILD
EARLY BUILD
L61 18 LG
13 C1
7 C2
11 C1
RIGHT TURN SIGNAL (IN)
PANEL LAMPS DIMMER SIGNAL
LEFT TURN SIGNAL (IN)
INSTRUMENT CLUSTER
(8Wa-40-4)
(8Wa-40-13)
24 C105
L61 20 LG
L61 20 OR
25 C105
L60 18 TN
L61 18 LG
1
2
RIGHT FRONT SIDE MARKER (BUILT-UP -EXPORT)
RIGHT TURN SIGNAL INDICATOR
LEFT TURN SIGNAL INDICATOR
LEFT FRONT SIDE MARKER (BUILT-UP -EXPORT)
Z1 18 BK
Z1 20 BK
Z1 20 BK
Z1 18 BK
S120
(8Wa-15-6)
(8Wa-15-11)
S216
(8Wa-15-16)
(8Wa-15-21)
S146
(8Wa-15-5)
(8Wa-15-9)
Z1 20 BK
S241
(8Wa-15-16)
(8Wa-15-21)
LHD
RHD
LHD
RHD
Z1 16 BK
Z1 18 BK
Z1 16 BK
Z1 14 BK
Z1 16 BK
G104
(8Wa-15-7)
(8Wa-15-12)
G201
(8Wa-15-16)
(8Wa-15-21)
G103
(8Wa-15-5)
(8Wa-15-10)

2001 PT CRUISER

8W-53 WIPERS

Component	Page
Front Washer Pump Motor	8Wa-53-2, 3, 5
Front Wiper Motor	8Wa-53-2, 4
Front Wiper/Washer Switch	8Wa-53-2, 4
Fuse 15 (FB)	8Wa-53-2, 4
Fuse Block	8Wa-53-2, 4
G103	8Wa-53-2, 4
G104	8Wa-53-2, 4
G201	8Wa-53-2, 3, 4, 5
G300	8Wa-53-3, 5
Instrument Cluster	8Wa-53-3, 5
Rear Wiper Motor	8Wa-53-3, 5
Rear Wiper Switch	8Wa-53-2, 3, 5

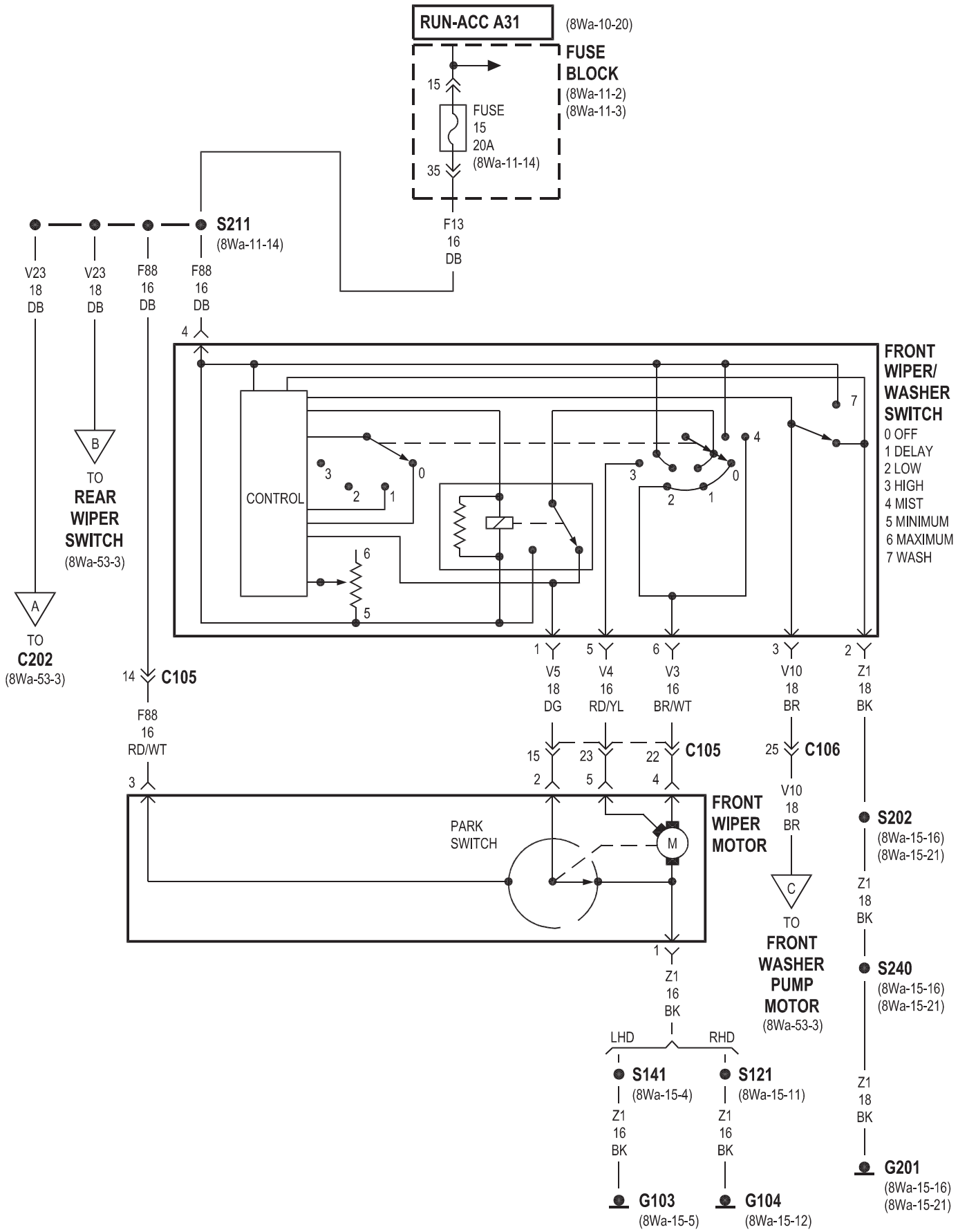
RUN-ACC A31
(8Wa-10-20)
FUSE BLOCK
(8Wa-11-2)
(8Wa-11-3)
15
FUSE 15 20A
(8Wa-11-14)
35
F13 16 DB
S211
(8Wa-11-14)
V23 18 DB
V23 18 DB
F88 16 DB
F88 16 DB
4
FRONT WIPER/ WASHER SWITCH
0 OFF
1 DELAY
2 LOW
3 HIGH
4 MIST
5 MINIMUM
6 MAXIMUM
7 WASH
CONTROL
B
TO REAR WIPER SWITCH
(8Wa-53-3)
A
TO C202
(8Wa-53-3)
14
C105
F88 16 RD/WT
1 V5 18 DG
5 V4 16 RD/YL
6 V3 16 BR/WT
3 V10 18 BR
2 Z1 18 BK
15
23
22
C105
25
C106
V10 18 BR
3
PARK SWITCH
M
FRONT WIPER MOTOR
S202
(8Wa-15-16)
(8Wa-15-21)
Z1 18 BK
C
TO FRONT WASHER PUMP MOTOR
(8Wa-53-3)
S240
(8Wa-15-16)
(8Wa-15-21)
1
Z1 16 BK
LHD
RHD
S141
(8Wa-15-4)
S121
(8Wa-15-11)
Z1 16 BK
Z1 16 BK
Z1 18 BK
G201
(8Wa-15-16)
(8Wa-15-21)
G103
(8Wa-15-5)
G104
(8Wa-15-12)

NORMAL BUILD

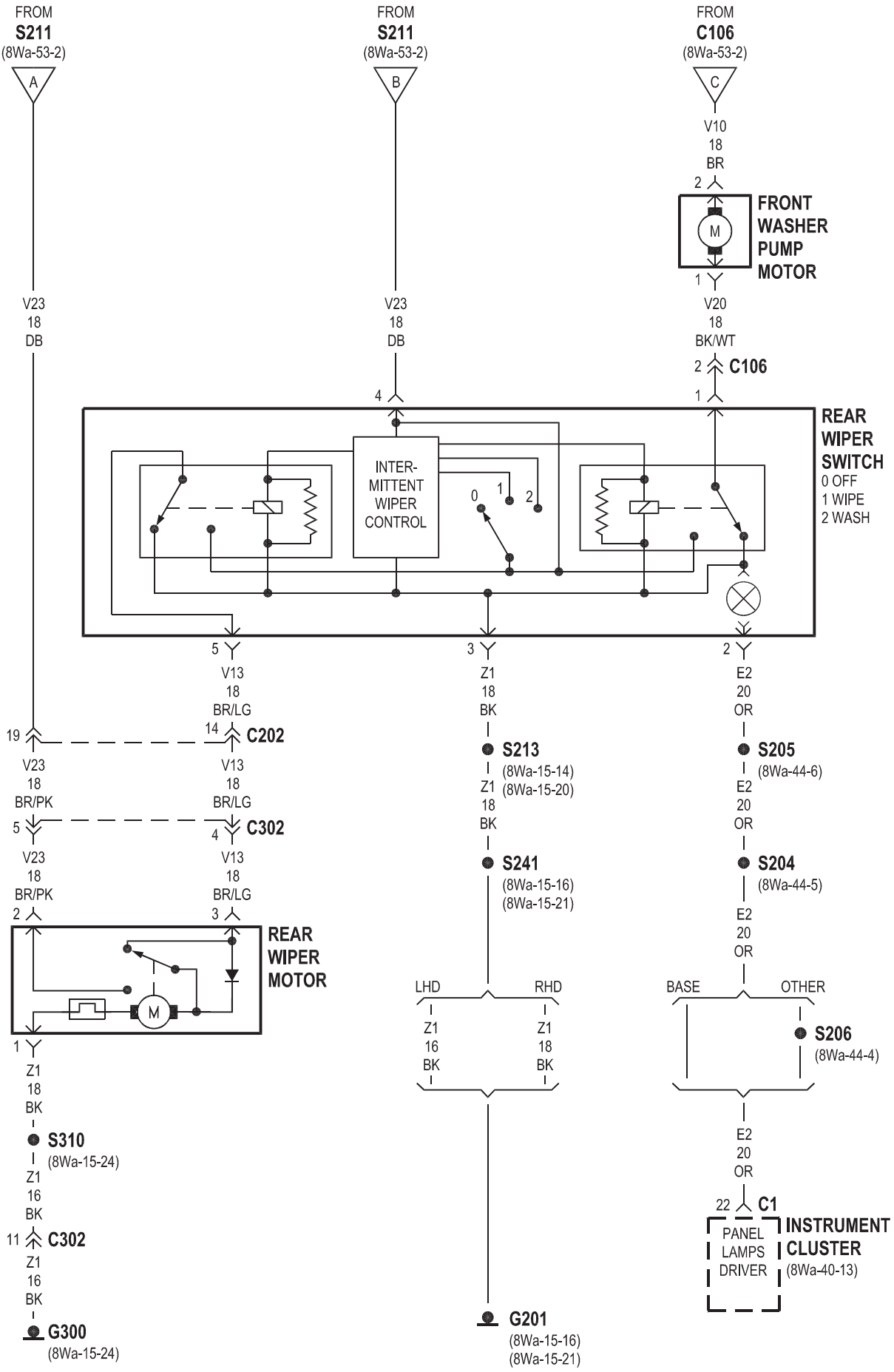

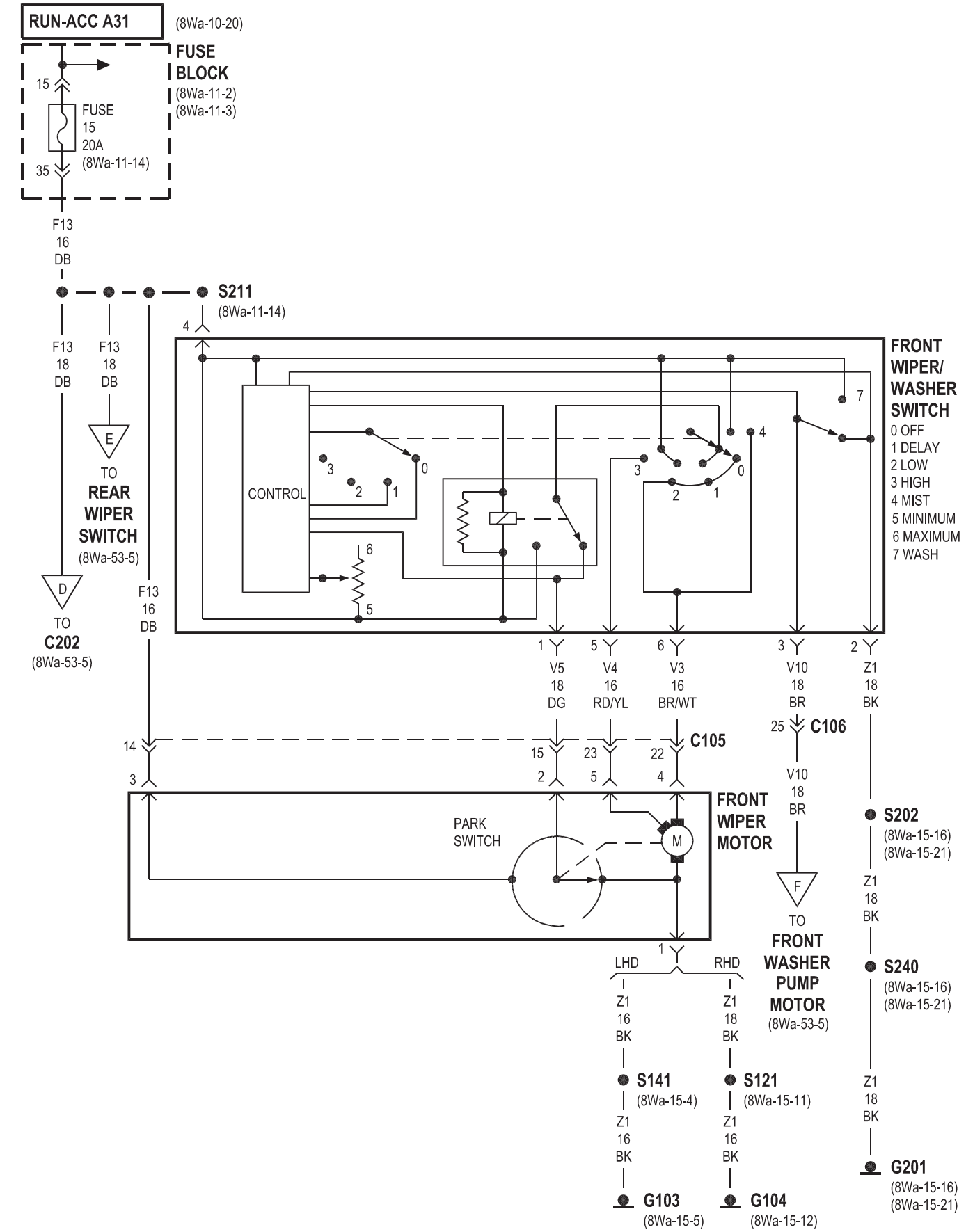
RUN-ACC A31
(8Wa-10-20)
FUSE BLOCK
(8Wa-11-2)
(8Wa-11-3)
15
FUSE 15 20A
(8Wa-11-14)
35
F13 16 DB
S211
(8Wa-11-14)
4
F13 18 DB
F13 18 DB
E
TO REAR WIPER SWITCH
(8Wa-53-5)
D
TO C202
(8Wa-53-5)
F13 16 DB
CONTROL
FRONT WIPER/ WASHER SWITCH
0 OFF
1 DELAY
2 LOW
3 HIGH
4 MIST
5 MINIMUM
6 MAXIMUM
7 WASH
1 V5 18 DG
5 V4 16 RD/YL
6 V3 16 BR/WT
3 V10 18 BR
2 Z1 18 BK
14
3
15
2
23
5
22
4
C105
25
C106
V10 18 BR
PARK SWITCH
M
FRONT WIPER MOTOR
S202
(8Wa-15-16)
(8Wa-15-21)
Z1 18 BK
F
TO FRONT WASHER PUMP MOTOR
(8Wa-53-5)
1
LHD
RHD
Z1 16 BK
Z1 18 BK
S240
(8Wa-15-16)
(8Wa-15-21)
S141
(8Wa-15-4)
S121
(8Wa-15-11)
Z1 16 BK
Z1 16 BK
Z1 18 BK
G201
(8Wa-15-16)
(8Wa-15-21)
G103
(8Wa-15-5)
G104
(8Wa-15-12)

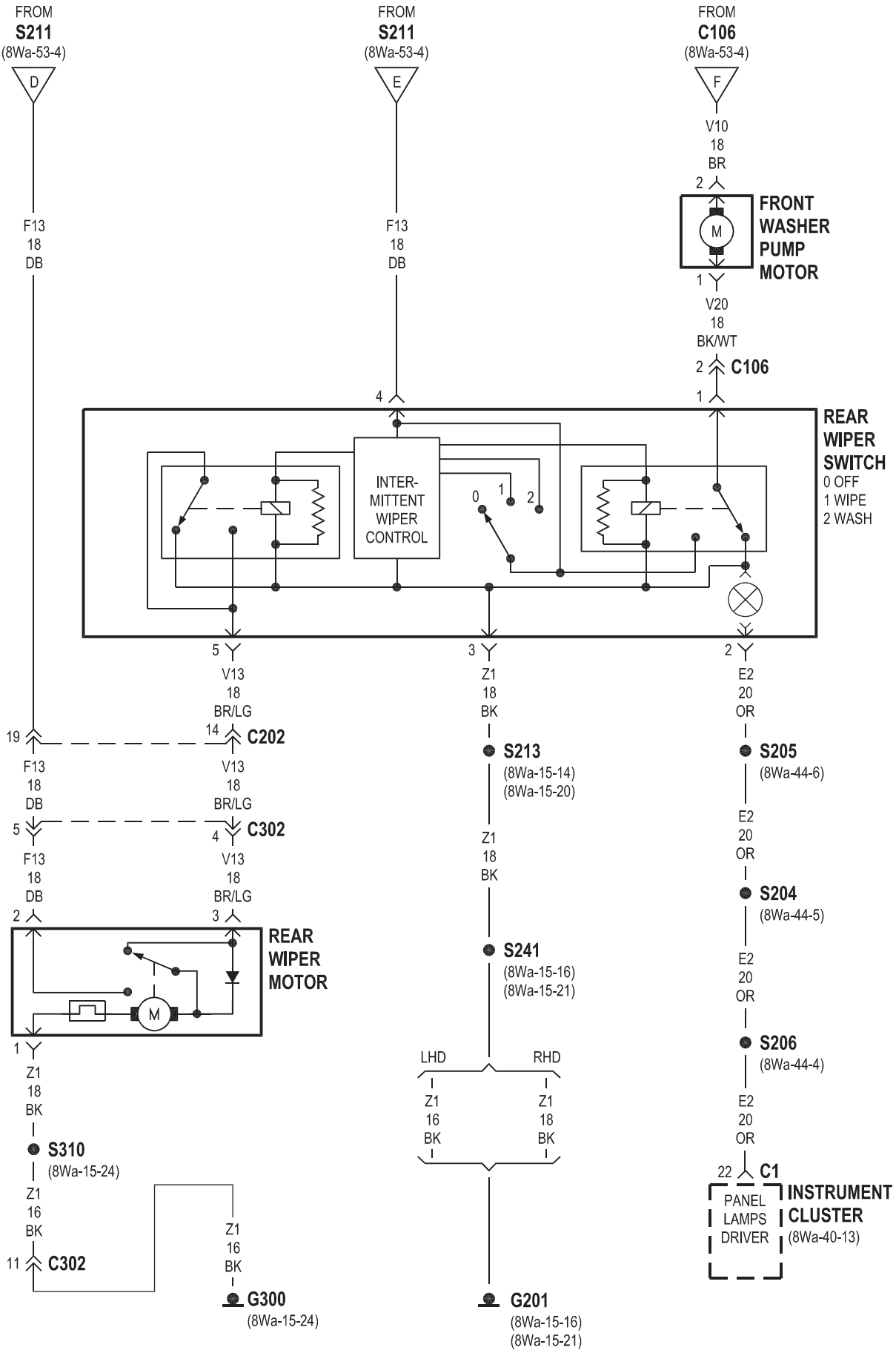
FROM
S211
(8Wa-53-4)
D
FROM
S211
(8Wa-53-4)
E
FROM
C106
(8Wa-53-4)
F
V10
18
BR
2
FRONT
WASHER
PUMP
MOTOR
M
1
V20
18
BK/WT
2
C106
1
F13
18
DB
F13
18
DB
4
REAR
WIPER
SWITCH
0 OFF
1 WIPE
2 WASH
INTER-
MITTENT
WIPER
CONTROL
0
1
2
5
V13
18
BR/LG
3
Z1
18
BK
2
E2
20
OR
19
14
C202
F13
18
DB
V13
18
BR/LG
S213
(8Wa-15-14)
(8Wa-15-20)
S205
(8Wa-44-6)
5
4
C302
F13
18
DB
V13
18
BR/LG
Z1
18
BK
E2
20
OR
S204
(8Wa-44-5)
2
3
REAR
WIPER
MOTOR
M
S241
(8Wa-15-16)
(8Wa-15-21)
E2
20
OR
S206
(8Wa-44-4)
1
Z1
18
BK
LHD
RHD
Z1
16
BK
Z1
18
BK
E2
20
OR
S310
(8Wa-15-24)
22
C1
PANEL
LAMPS
DRIVER
INSTRUMENT
CLUSTER
(8Wa-40-13)
Z1
16
BK
11
C302
Z1
16
BK
G300
(8Wa-15-24)
G201
(8Wa-15-16)
(8Wa-15-21)

2001 PT CRUISER

8W-60 POWER WINDOWS

Component	Page
Circuit Breaker No. 2 (FB)	8Wa-60-2, 3, 6
Front Power Window Switch	8Wa-60-2, 3, 4, 5, 6, 7
Fuse Block	8Wa-60-2, 3, 6
G203	8Wa-60-4, 5, 7
Instrument Cluster	8Wa-60-2, 3, 6
Left Front Power Window Motor	8Wa-60-2, 6
Left Rear Power Window Motor	8Wa-60-4, 7
Left Rear Power Window Switch	8Wa-60-3, 4
Rear Power Window Switch	8Wa-60-7
Right Front Power Window Motor	8Wa-60-2, 6
Right Rear Power Window Motor	8Wa-60-3, 4, 5, 7
Right Rear Power Window Switch	8Wa-60-5

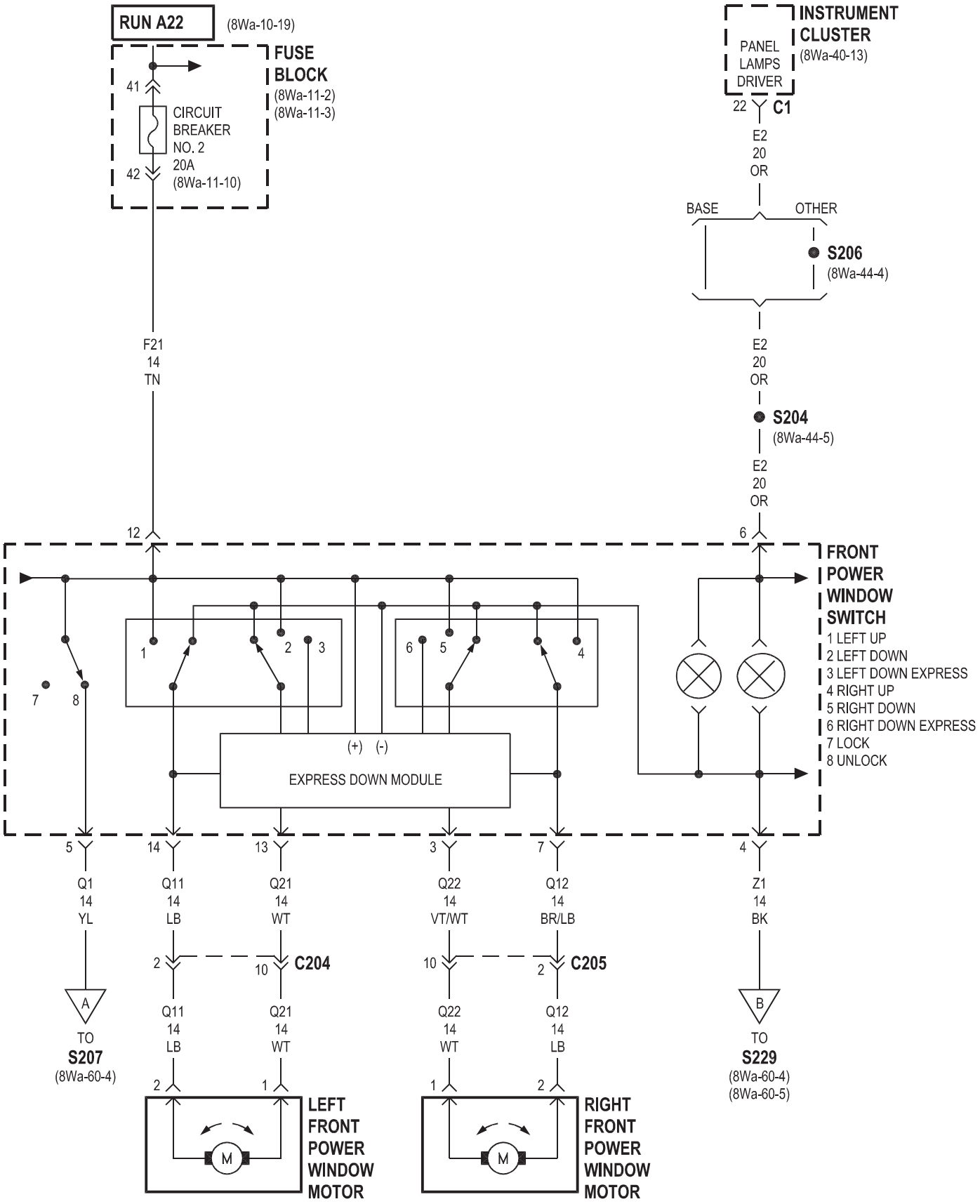
RUN A22
(8Wa-10-19)
FUSE BLOCK
(8Wa-11-2)
(8Wa-11-3)
41
CIRCUIT BREAKER NO. 2 20A
(8Wa-11-10)
42
F21
14
TN
12
INSTRUMENT CLUSTER
(8Wa-40-13)
PANEL LAMPS DRIVER
22
C1
E2
20
OR
BASE
OTHER
S206
(8Wa-44-4)
E2
20
OR
S204
(8Wa-44-5)
E2
20
OR
6
FRONT POWER WINDOW SWITCH
1 LEFT UP
2 LEFT DOWN
3 LEFT DOWN EXPRESS
4 RIGHT UP
5 RIGHT DOWN
6 RIGHT DOWN EXPRESS
7 LOCK
8 UNLOCK
(+) (-)
EXPRESS DOWN MODULE
5
14
13
3
7
4
Q1
14
YL
Q11
14
LB
Q21
14
WT
Q22
14
VT/WT
Q12
14
BR/LB
Z1
14
BK
2
10
C204
10
2
C205
A
TO
S207
(8Wa-60-4)
Q11
14
LB
Q21
14
WT
Q22
14
WT
Q12
14
LB
B
TO
S229
(8Wa-60-4)
(8Wa-60-5)
2
1
1
2
M
LEFT FRONT POWER WINDOW MOTOR
M
RIGHT FRONT POWER WINDOW MOTOR

NORMAL BUILD

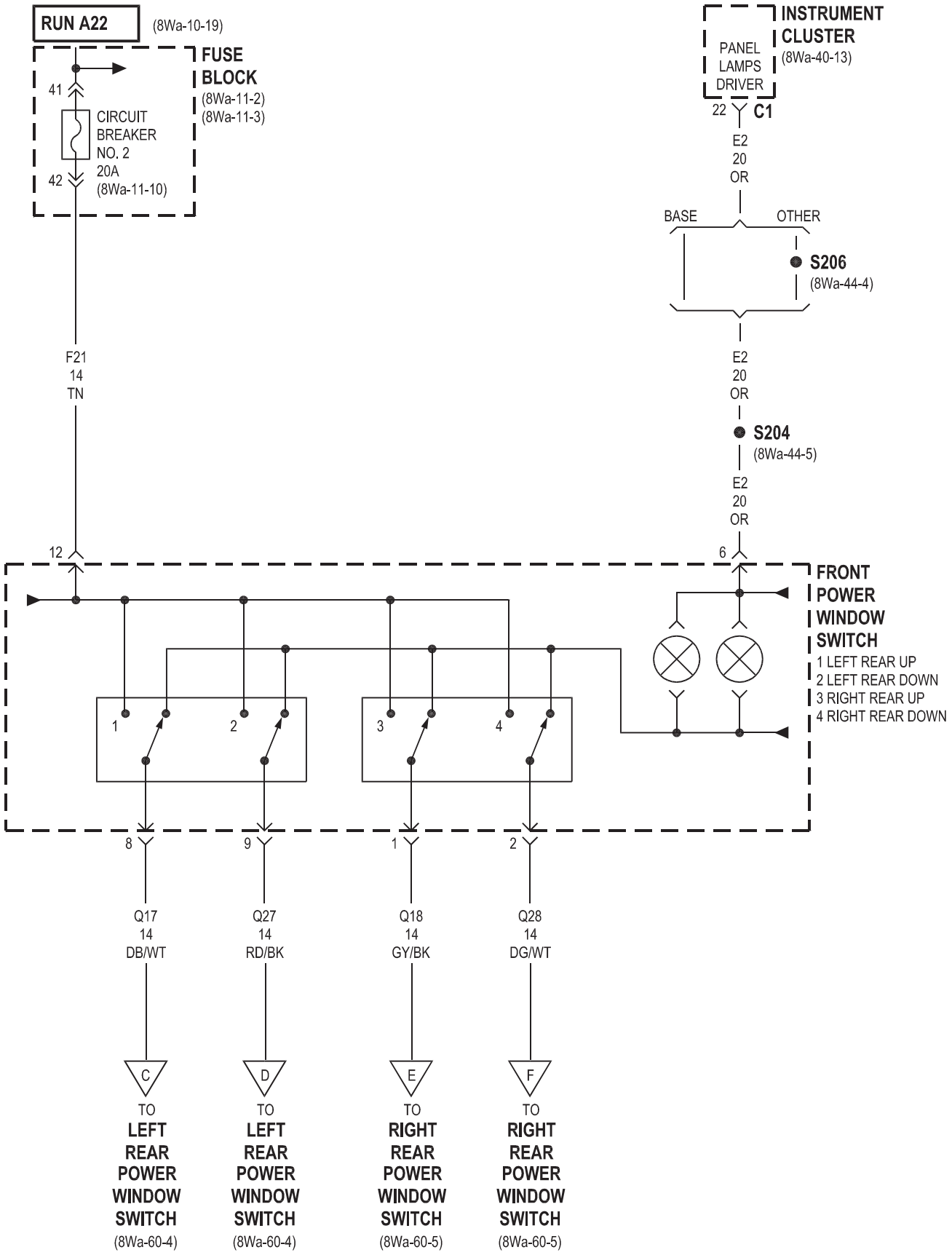

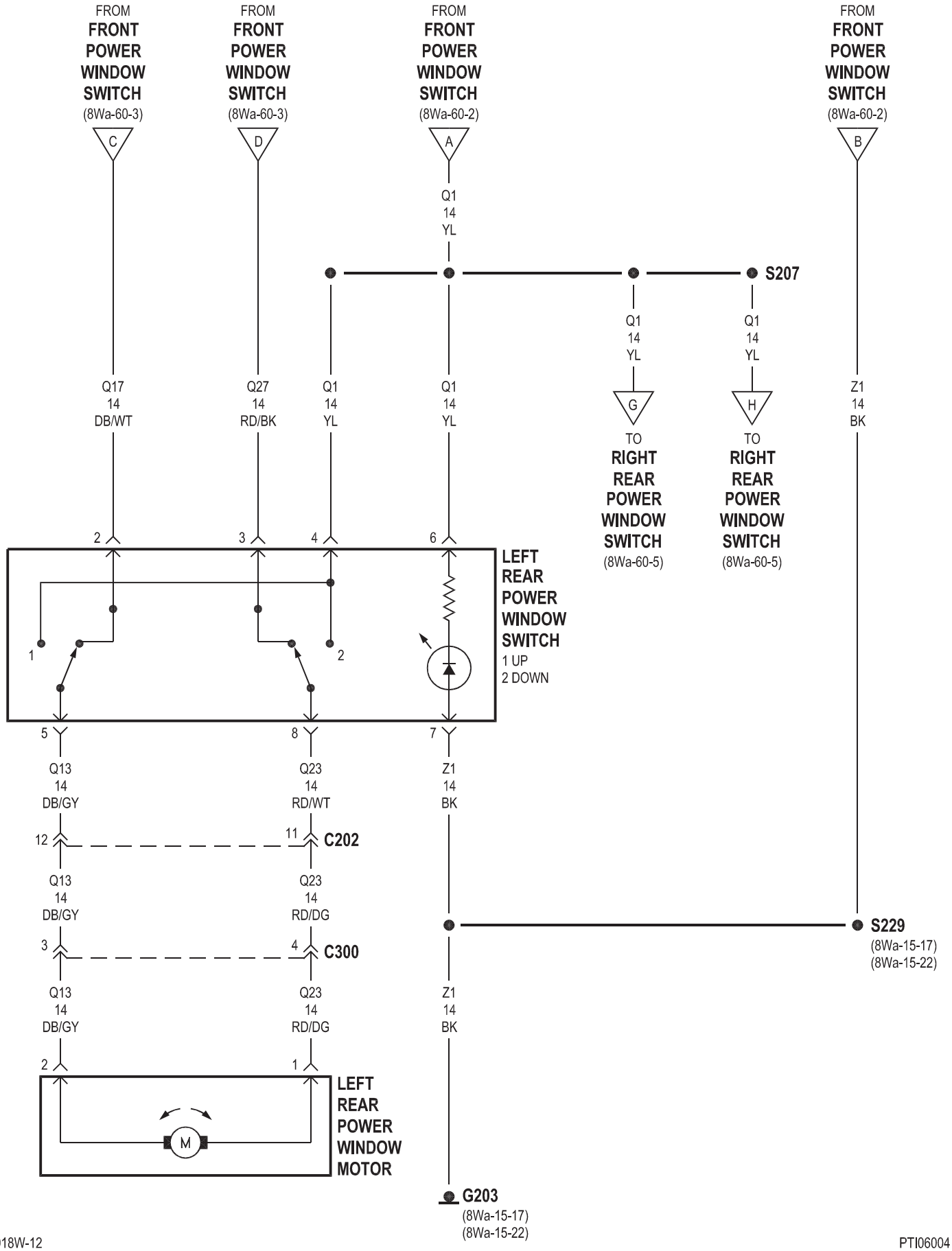
FROM FRONT POWER WINDOW SWITCH (8Wa-60-3)
C
FROM FRONT POWER WINDOW SWITCH (8Wa-60-3)
D
FROM FRONT POWER WINDOW SWITCH (8Wa-60-2)
A
FROM FRONT POWER WINDOW SWITCH (8Wa-60-2)
B
Q1 14 YL
S207
Q1 14 YL
Q1 14 YL
G
H
TO RIGHT REAR POWER WINDOW SWITCH (8Wa-60-5)
TO RIGHT REAR POWER WINDOW SWITCH (8Wa-60-5)
Q17 14 DB/WT
Q27 14 RD/BK
Q1 14 YL
Q1 14 YL
Z1 14 BK
2
3
4
6
LEFT REAR POWER WINDOW SWITCH
1 UP
2 DOWN
1
2
5
8
7
Q13 14 DB/GY
Q23 14 RD/WT
Z1 14 BK
12
11
C202
Q13 14 DB/GY
Q23 14 RD/DG
S229
(8Wa-15-17)
(8Wa-15-22)
3
4
C300
Q13 14 DB/GY
Q23 14 RD/DG
Z1 14 BK
2
1
M
LEFT REAR POWER WINDOW MOTOR
G203
(8Wa-15-17)
(8Wa-15-22)

NORMAL BUILD

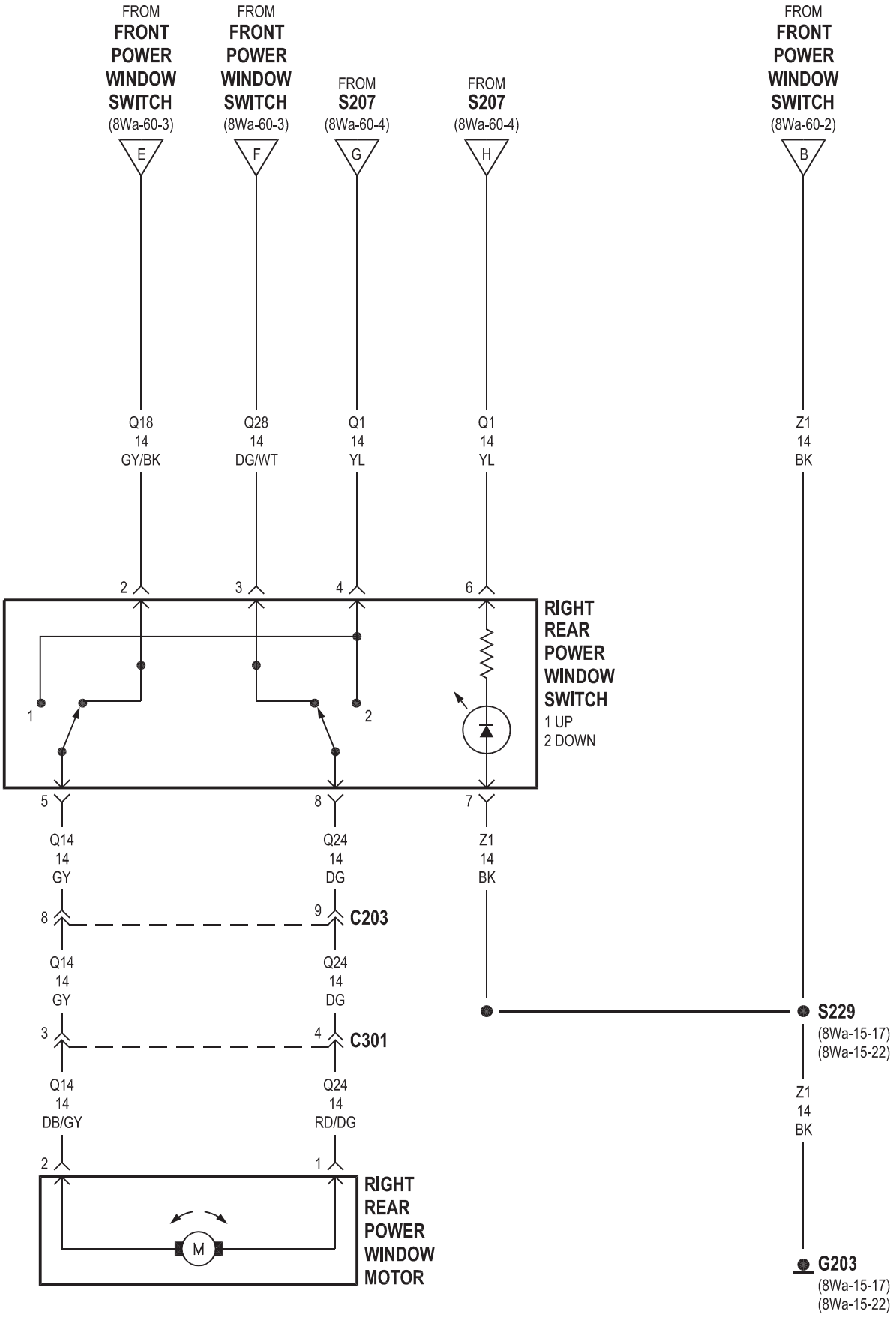

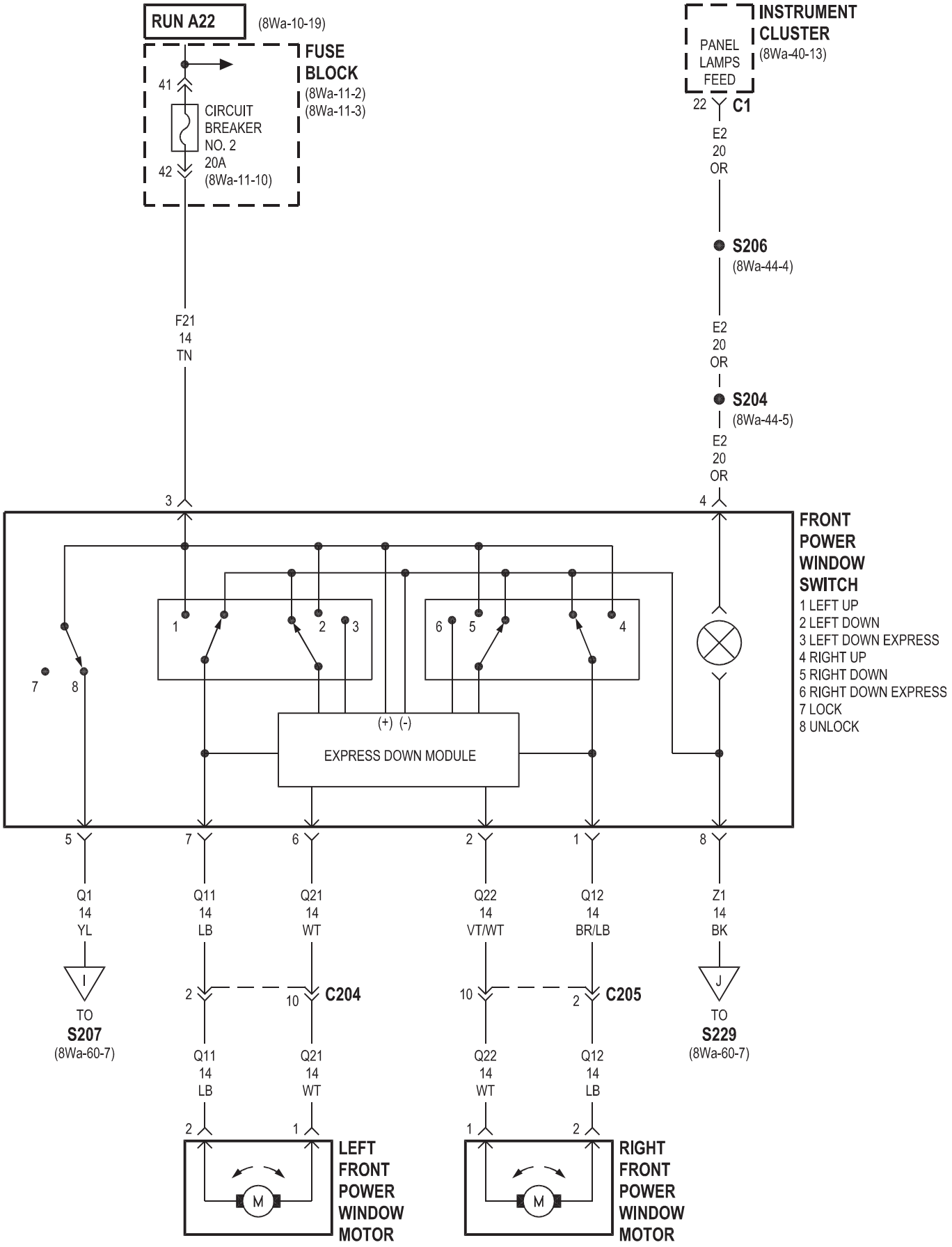
RUN A22
(8Wa-10-19)
FUSE BLOCK
(8Wa-11-2)
(8Wa-11-3)
41
CIRCUIT BREAKER NO. 2 20A
(8Wa-11-10)
42
F21 14 TN
INSTRUMENT CLUSTER
(8Wa-40-13)
PANEL LAMPS FEED
22
C1
E2 20 OR
S206
(8Wa-44-4)
E2 20 OR
S204
(8Wa-44-5)
E2 20 OR
3
4
FRONT POWER WINDOW SWITCH
1 LEFT UP
2 LEFT DOWN
3 LEFT DOWN EXPRESS
4 RIGHT UP
5 RIGHT DOWN
6 RIGHT DOWN EXPRESS
7 LOCK
8 UNLOCK
(+) (-)
EXPRESS DOWN MODULE
5
7
6
2
1
8
Q1 14 YL
Q11 14 LB
Q21 14 WT
Q22 14 VT/WT
Q12 14 BR/LB
Z1 14 BK
I
TO S207
(8Wa-60-7)
C204
C205
J
TO S229
(8Wa-60-7)
Q11 14 LB
Q21 14 WT
Q22 14 WT
Q12 14 LB
LEFT FRONT POWER WINDOW MOTOR
RIGHT FRONT POWER WINDOW MOTOR
M

EARLY BUILD

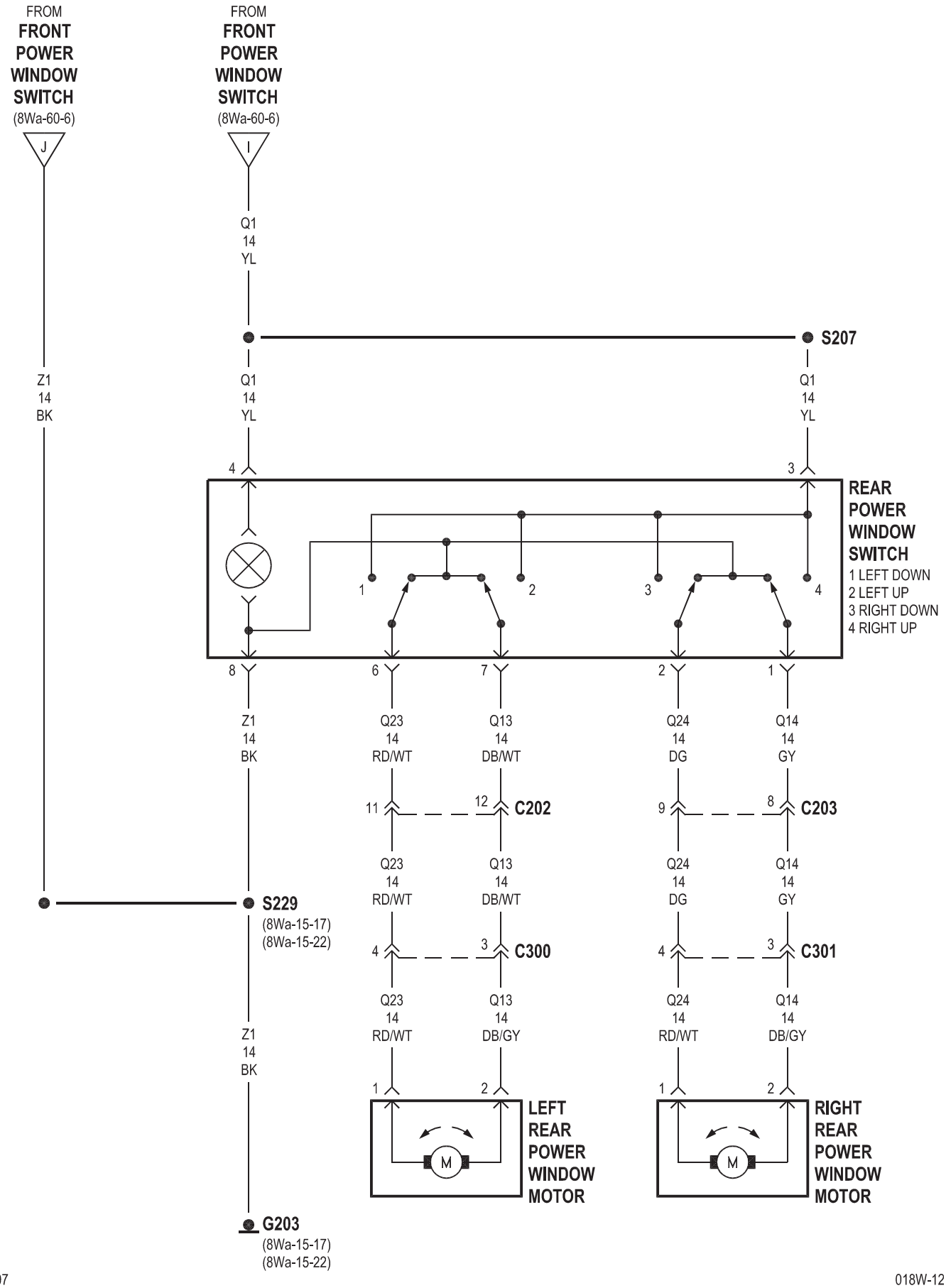
FROM
FRONT POWER WINDOW SWITCH
(8Wa-60-6)
J
FROM
FRONT POWER WINDOW SWITCH
(8Wa-60-6)
I
Q1
14
YL
S207
Z1
14
BK
Q1
14
YL
Q1
14
YL
4
3
REAR POWER WINDOW SWITCH
1 LEFT DOWN
2 LEFT UP
3 RIGHT DOWN
4 RIGHT UP
1
2
3
4
8
6
7
2
1
Z1
14
BK
Q23
14
RD/WT
Q13
14
DB/WT
Q24
14
DG
Q14
14
GY
11
12
C202
9
8
C203
Q23
14
RD/WT
Q13
14
DB/WT
Q24
14
DG
Q14
14
GY
S229
(8Wa-15-17)
(8Wa-15-22)
4
3
C300
4
3
C301
Q23
14
RD/WT
Q13
14
DB/GY
Q24
14
RD/WT
Q14
14
DB/GY
Z1
14
BK
1
2
1
2
M
LEFT REAR POWER WINDOW MOTOR
M
RIGHT REAR POWER WINDOW MOTOR
G203
(8Wa-15-17)
(8Wa-15-22)

2001 PT CRUISER

8W-61 POWER DOOR LOCKS

Component	Page
Data Link Connector	8Wa-61-9
Driver Cylinder Lock Switch	8Wa-61-3, 4
Driver Door Lock Motor	8Wa-61-10
Driver Door Lock Switch	8Wa-61-3, 4
Driver Door Power Lock Motor/Ajar Switch	8Wa-61-10, 11, 12
Fuse 1 (FB)	8Wa-61-2
Fuse 3 (FB)	8Wa-61-2
Fuse 10 (FB)	8Wa-61-2
Fuse Block	8Wa-61-2
G200	8Wa-61-2
G201	8Wa-61-2, 3, 4, 11, 12
G204	8Wa-61-5, 6, 11, 12
G300	8Wa-61-4, 5, 9
Headlamp Switch	8Wa-61-3, 4, 5, 6
Left Rear Door Power Lock Motor	8Wa-61-7, 8
Liftgate Ajar Switch	8Wa-61-9
Liftgate Cylinder Lock Switch	8Wa-61-4, 5
Liftgate Power Lock Motor	8Wa-61-7, 8
Passenger Cylinder Lock Switch	8Wa-61-5, 6
Passenger Door Lock Motor	8Wa-61-10
Passenger Door Lock Switch	8Wa-61-5, 6
Passenger Door Power Lock Motor/Ajar Switch	8Wa-61-10, 11, 12
Remote Keyless Entry Module	8Wa-61-2, 3, 4, 5, 6, 7, 8, 9, 10, 11, 12
Right Rear Door Power Lock Motor	8Wa-61-7, 8

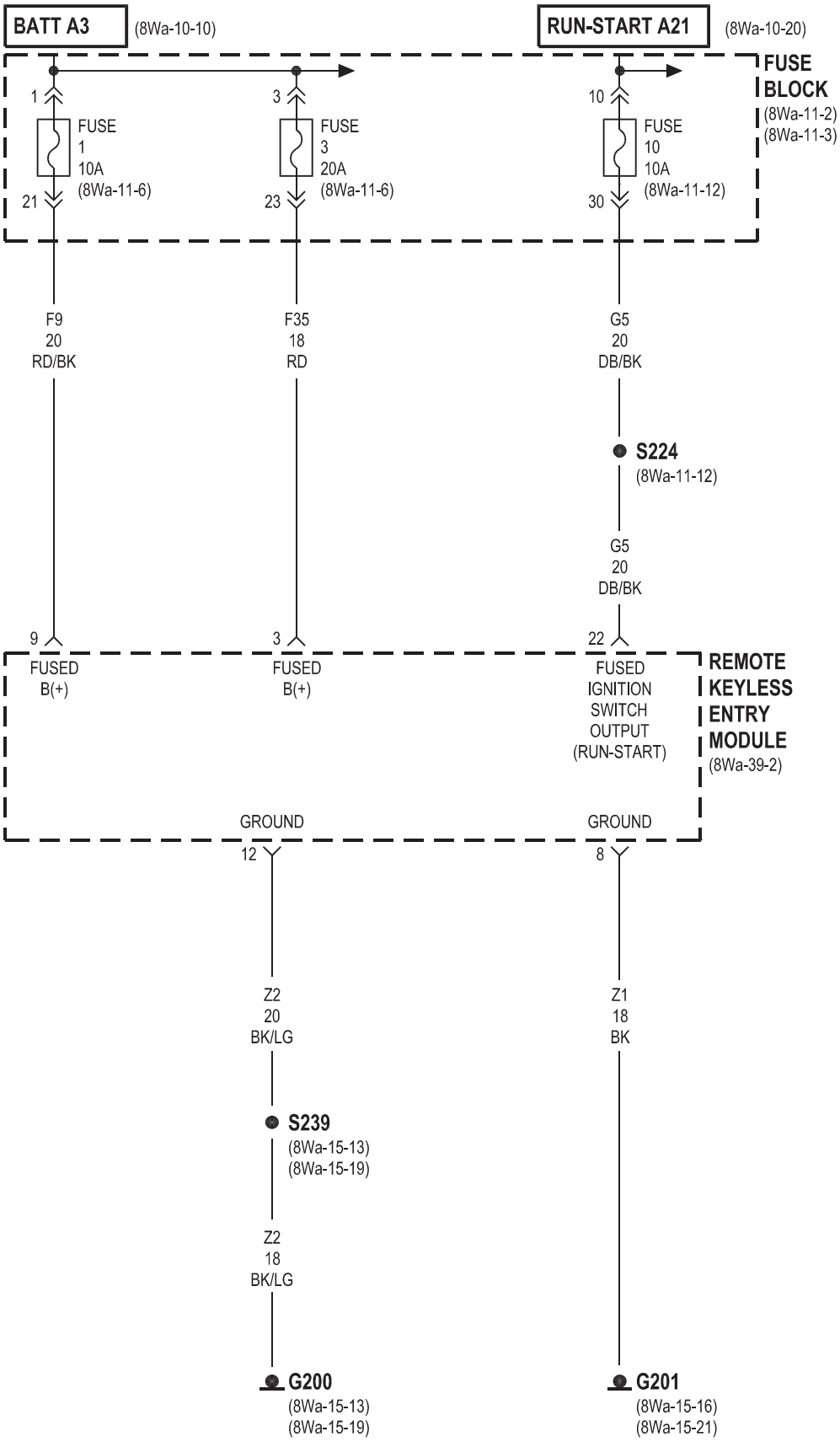
BATT A3
(8Wa-10-10)
RUN-START A21
(8Wa-10-20)
FUSE BLOCK
(8Wa-11-2)
(8Wa-11-3)
1
FUSE 1 10A
(8Wa-11-6)
21
3
FUSE 3 20A
(8Wa-11-6)
23
10
FUSE 10 10A
(8Wa-11-12)
30
F9 20 RD/BK
F35 18 RD
G5 20 DB/BK
S224
(8Wa-11-12)
G5 20 DB/BK
9
FUSED B(+)
3
FUSED B(+)
22
FUSED IGNITION SWITCH OUTPUT (RUN-START)
REMOTE KEYLESS ENTRY MODULE
(8Wa-39-2)
GROUND
12
GROUND
8
Z2 20 BK/LG
Z1 18 BK
S239
(8Wa-15-13)
(8Wa-15-19)
Z2 18 BK/LG
G200
(8Wa-15-13)
(8Wa-15-19)
G201
(8Wa-15-16)
(8Wa-15-21)

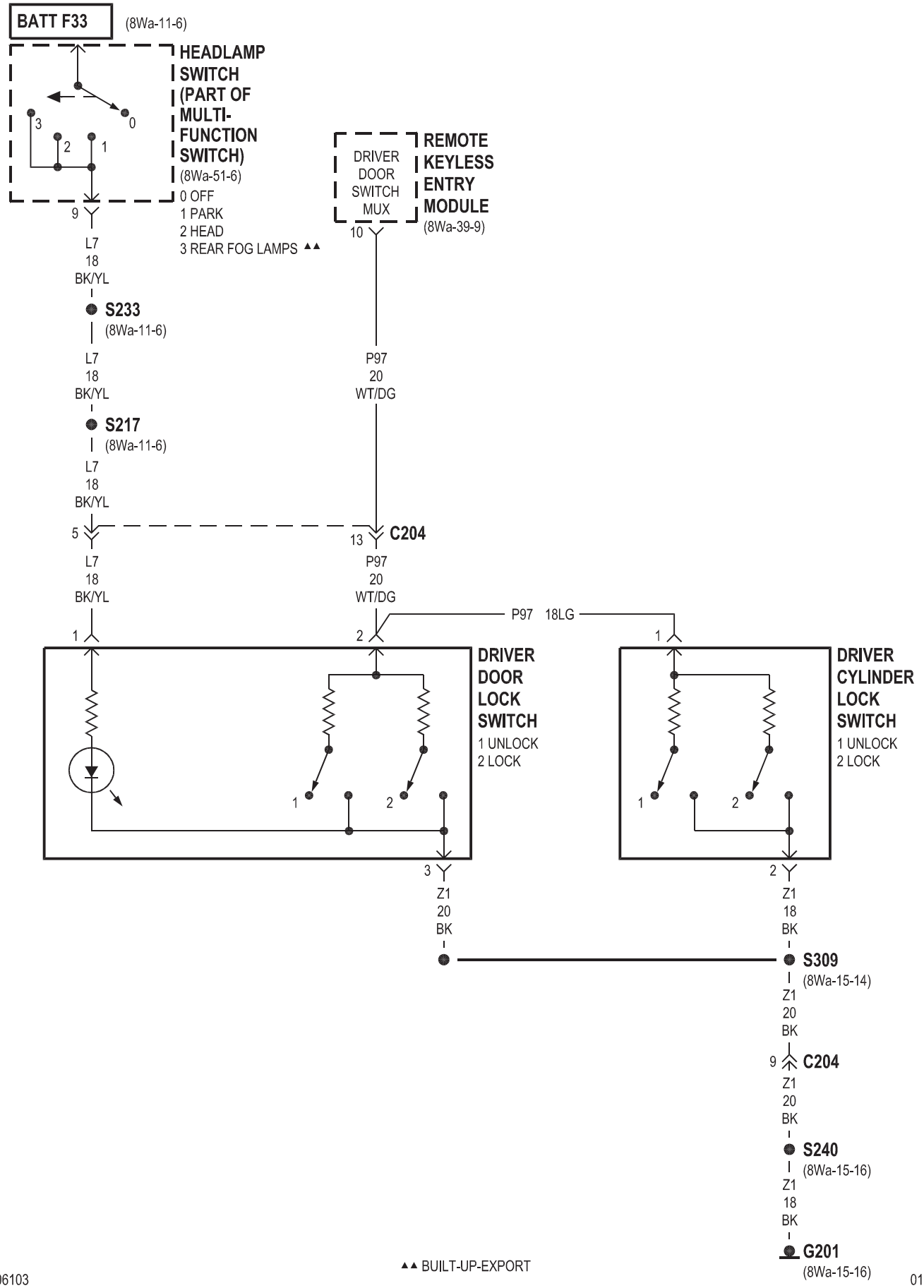

▲▲ BUILT-UP-EXPORT

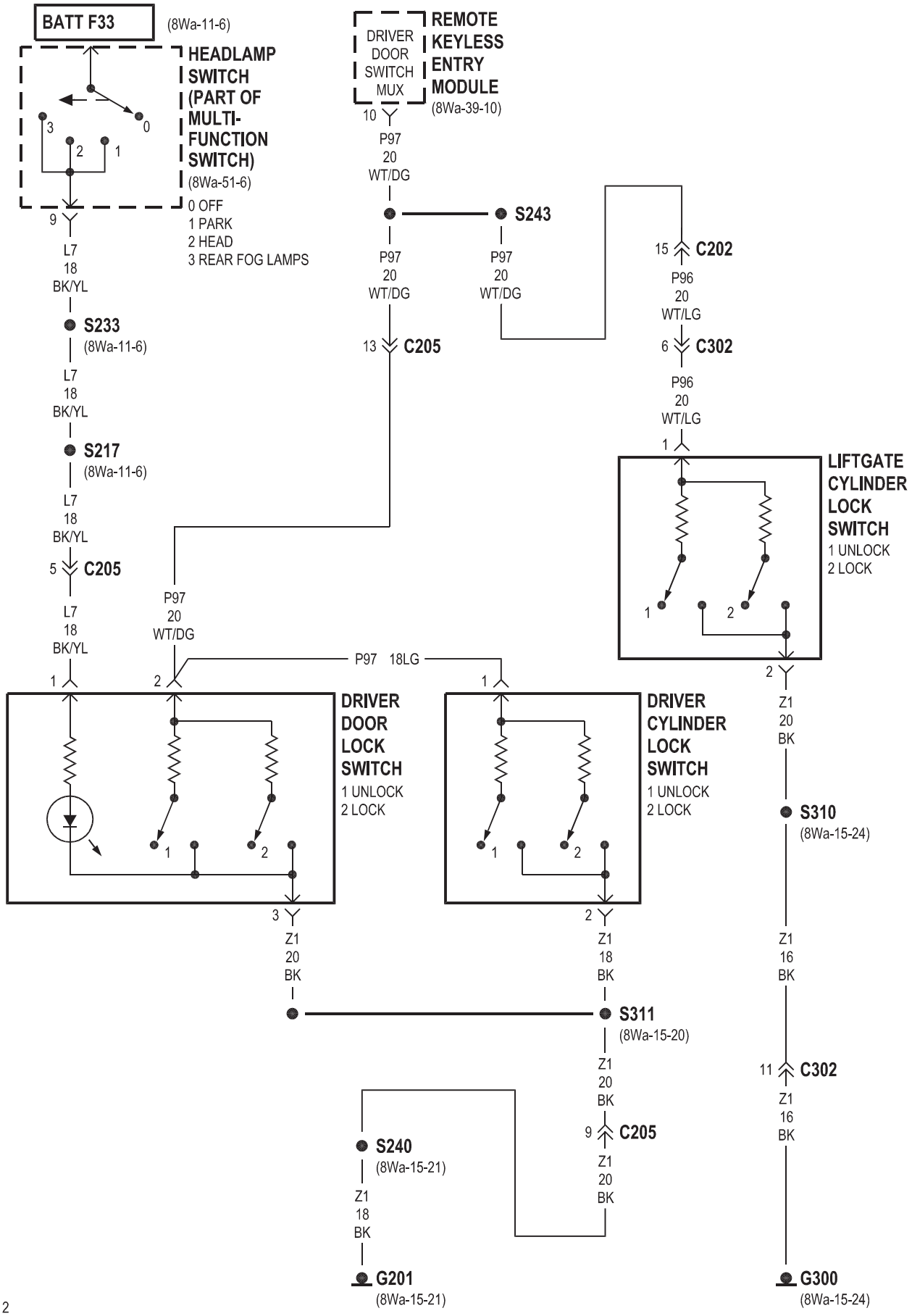
BATT F33
(8Wa-11-6)
HEADLAMP SWITCH (PART OF MULTI-FUNCTION SWITCH)
(8Wa-51-6)
0 OFF
1 PARK
2 HEAD
3 REAR FOG LAMPS
DRIVER DOOR SWITCH MUX
REMOTE KEYLESS ENTRY MODULE
(8Wa-39-10)
10
P97
20
WT/DG
S243
P97
20
WT/DG
P97
20
WT/DG
15
C202
P96
20
WT/LG
6
C302
P96
20
WT/LG
13
C205
9
L7
18
BK/YL
S233
(8Wa-11-6)
L7
18
BK/YL
S217
(8Wa-11-6)
L7
18
BK/YL
5
C205
L7
18
BK/YL
P97
20
WT/DG
LIFTGATE CYLINDER LOCK SWITCH
1 UNLOCK
2 LOCK
P97 18LG
DRIVER DOOR LOCK SWITCH
1 UNLOCK
2 LOCK
DRIVER CYLINDER LOCK SWITCH
1 UNLOCK
2 LOCK
Z1
20
BK
S310
(8Wa-15-24)
Z1
20
BK
Z1
18
BK
S311
(8Wa-15-20)
Z1
16
BK
11
C302
Z1
16
BK
Z1
20
BK
9
C205
Z1
20
BK
S240
(8Wa-15-21)
Z1
18
BK
G201
(8Wa-15-21)
G300
(8Wa-15-24)

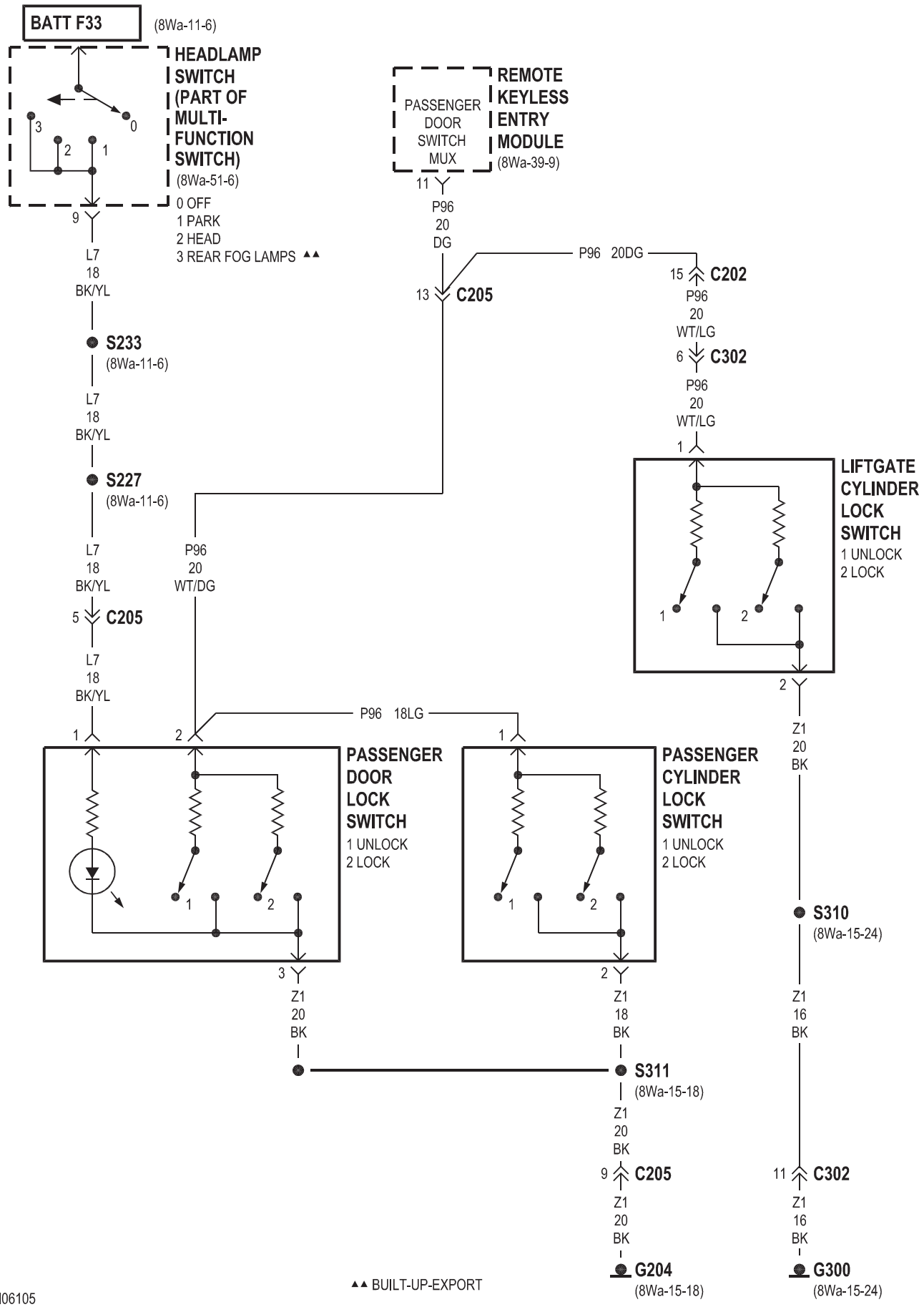

▲▲ BUILT-UP-EXPORT

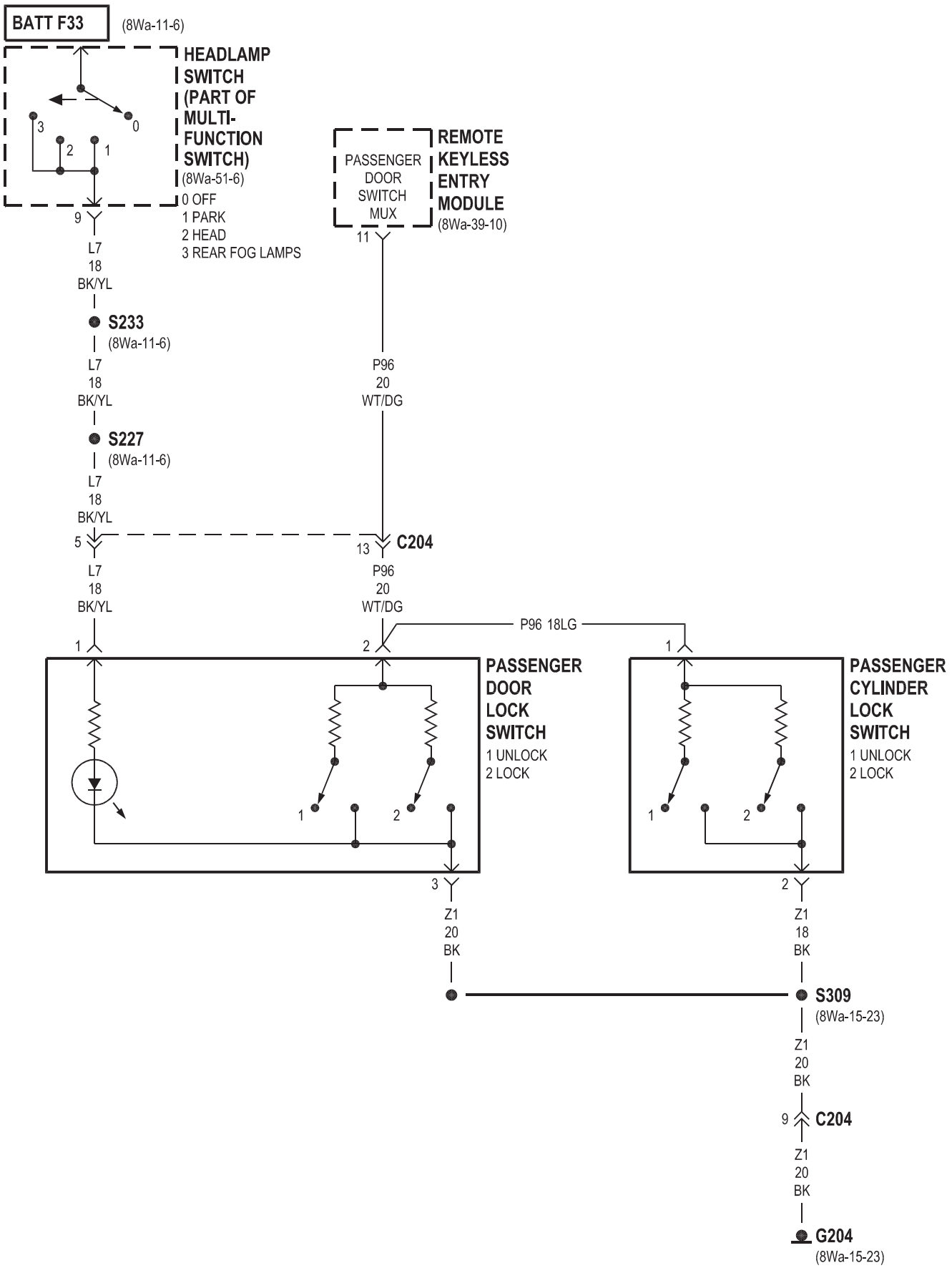
BATT F33
(8Wa-11-6)
HEADLAMP SWITCH (PART OF MULTI-FUNCTION SWITCH)
(8Wa-51-6)
0 OFF
1 PARK
2 HEAD
3 REAR FOG LAMPS
3
2
1
0
9
L7
18
BK/YL
S233
(8Wa-11-6)
L7
18
BK/YL
S227
(8Wa-11-6)
L7
18
BK/YL
5
L7
18
BK/YL
1
PASSENGER DOOR SWITCH MUX
REMOTE KEYLESS ENTRY MODULE
(8Wa-39-10)
11
P96
20
WT/DG
13
C204
P96
20
WT/DG
2
P96 18LG
1
PASSENGER DOOR LOCK SWITCH
1 UNLOCK
2 LOCK
1
2
3
Z1
20
BK
PASSENGER CYLINDER LOCK SWITCH
1 UNLOCK
2 LOCK
1
2
2
Z1
18
BK
S309
(8Wa-15-23)
Z1
20
BK
9
C204
Z1
20
BK
G204
(8Wa-15-23)

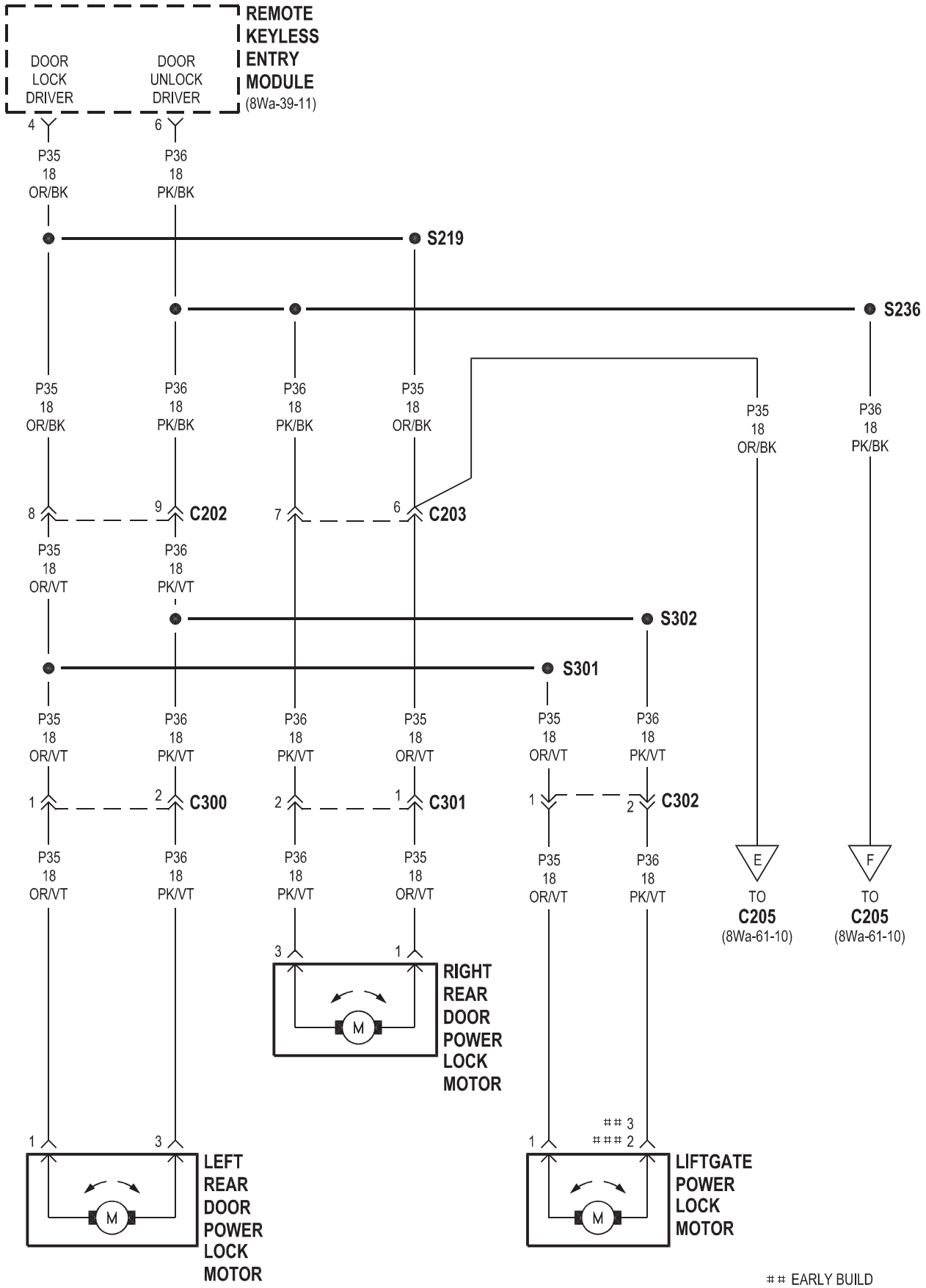

EARLY BUILD
NORMAL BUILD

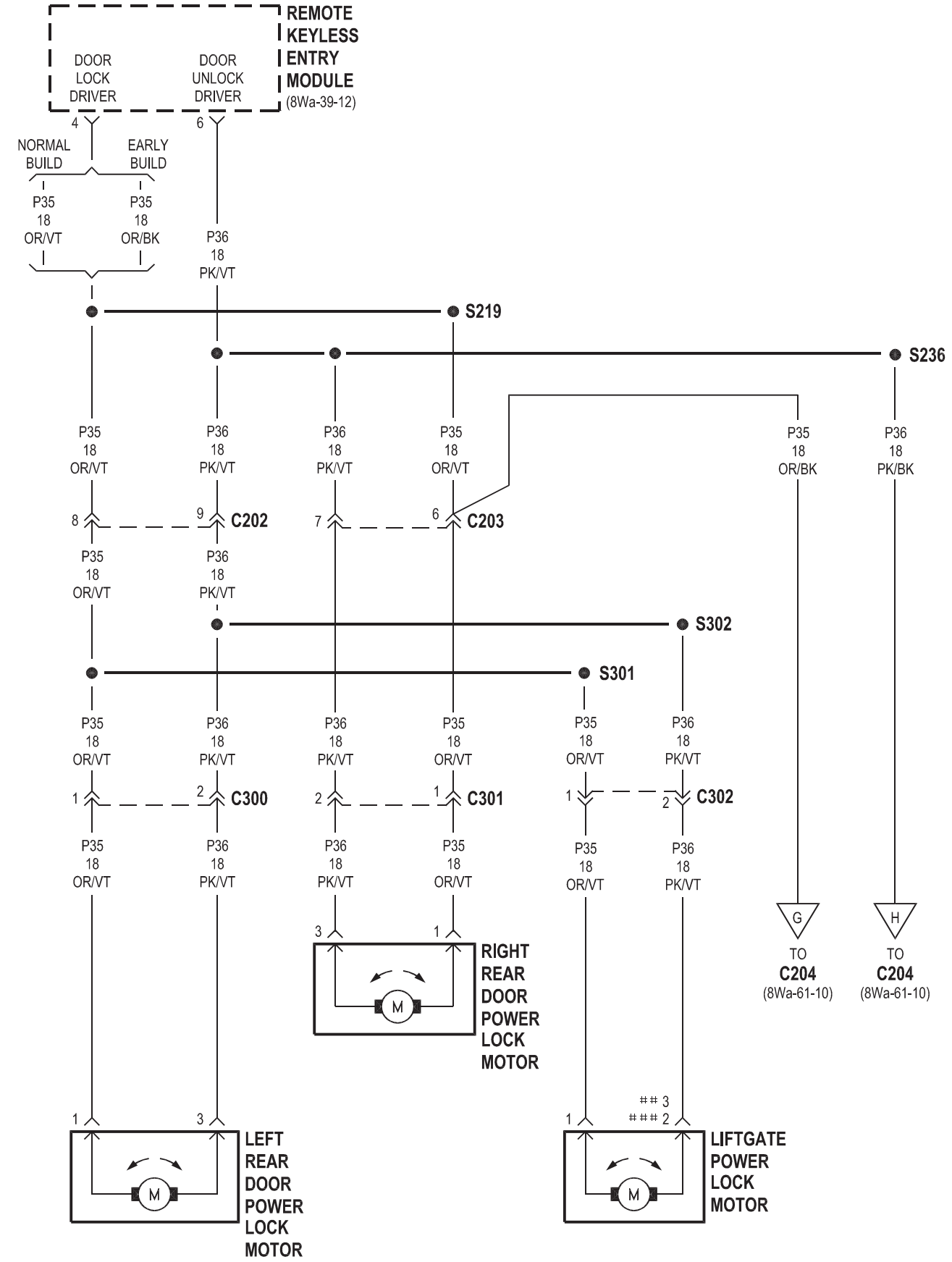

EARLY BUILD
NORMAL BUILD

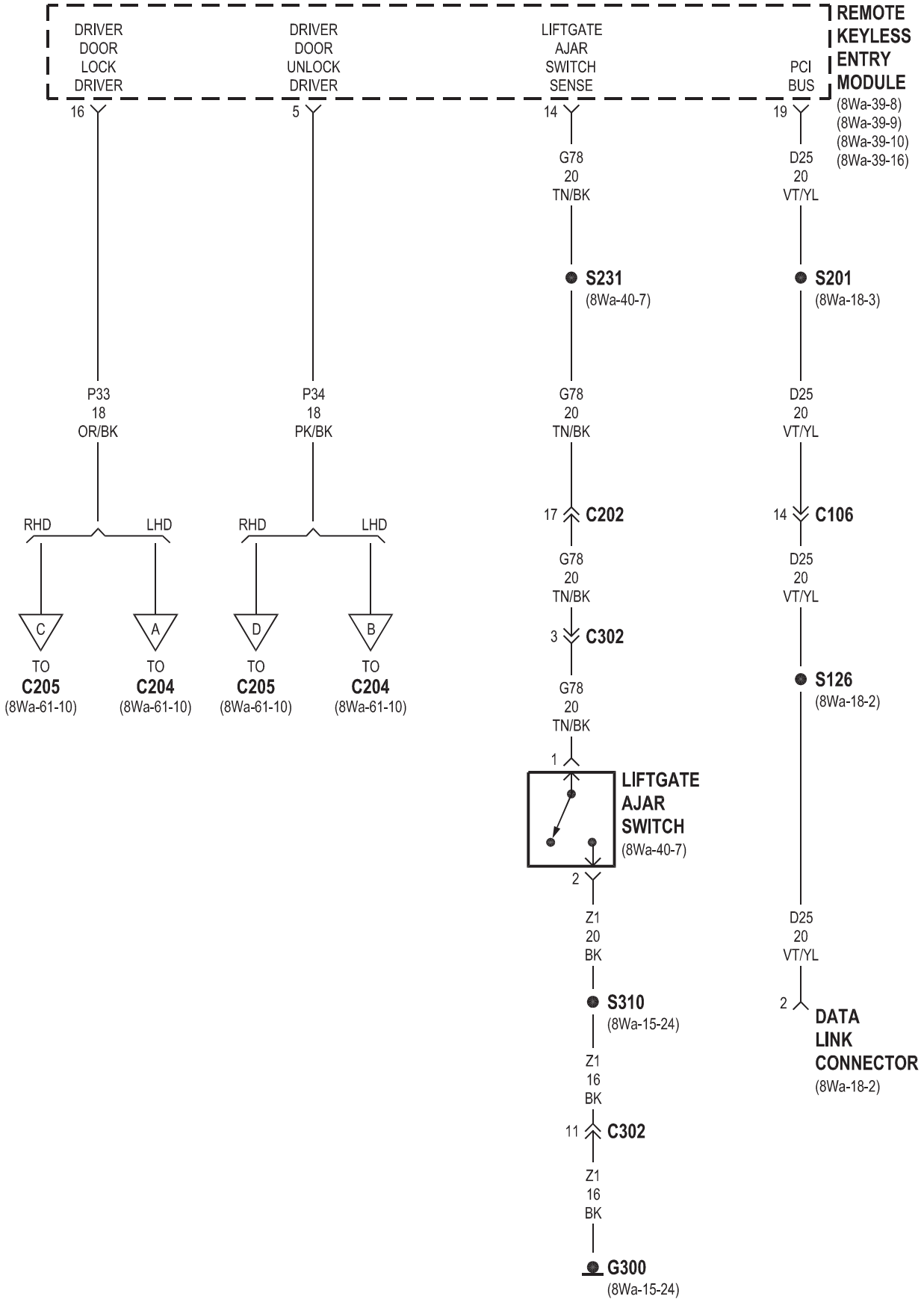
REMOTE KEYLESS ENTRY MODULE
(8Wa-39-8)
(8Wa-39-9)
(8Wa-39-10)
(8Wa-39-16)
DRIVER DOOR LOCK DRIVER
DRIVER DOOR UNLOCK DRIVER
LIFTGATE AJAR SWITCH SENSE
PCI BUS
16
5
14
19
G78 20 TN/BK
D25 20 VT/YL
S231
(8Wa-40-7)
S201
(8Wa-18-3)
P33 18 OR/BK
P34 18 PK/BK
G78 20 TN/BK
D25 20 VT/YL
RHD
LHD
RHD
LHD
17
C202
14
C106
G78 20 TN/BK
D25 20 VT/YL
C
A
D
B
3
C302
TO C205 (8Wa-61-10)
TO C204 (8Wa-61-10)
TO C205 (8Wa-61-10)
TO C204 (8Wa-61-10)
S126
(8Wa-18-2)
G78 20 TN/BK
1
LIFTGATE AJAR SWITCH
(8Wa-40-7)
2
Z1 20 BK
D25 20 VT/YL
S310
(8Wa-15-24)
2
DATA LINK CONNECTOR
(8Wa-18-2)
Z1 16 BK
11
C302
Z1 16 BK
G300
(8Wa-15-24)

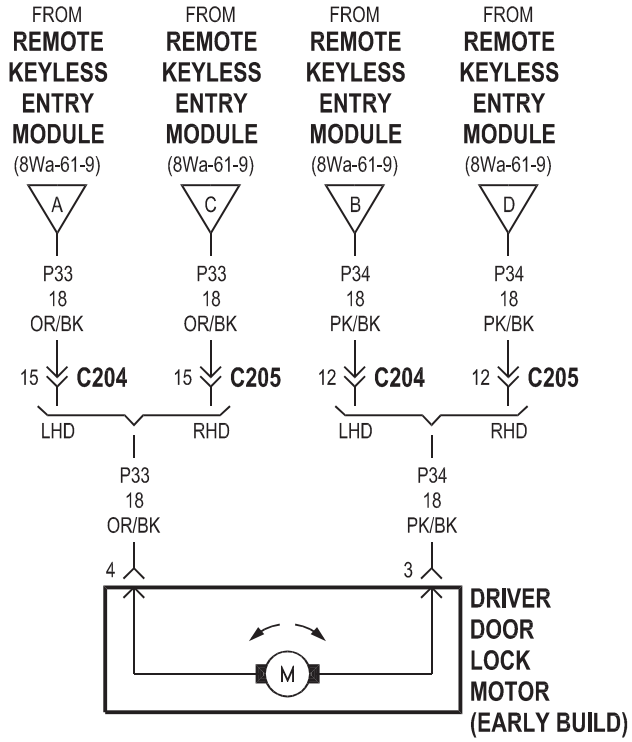
FROM REMOTE KEYLESS ENTRY MODULE (8Wa-61-9)
A
C
B
D
P33 18 OR/BK
P34 18 PK/BK
15 C204
15 C205
12 C204
12 C205
LHD
RHD
4
3
M
DRIVER DOOR LOCK MOTOR (EARLY BUILD)

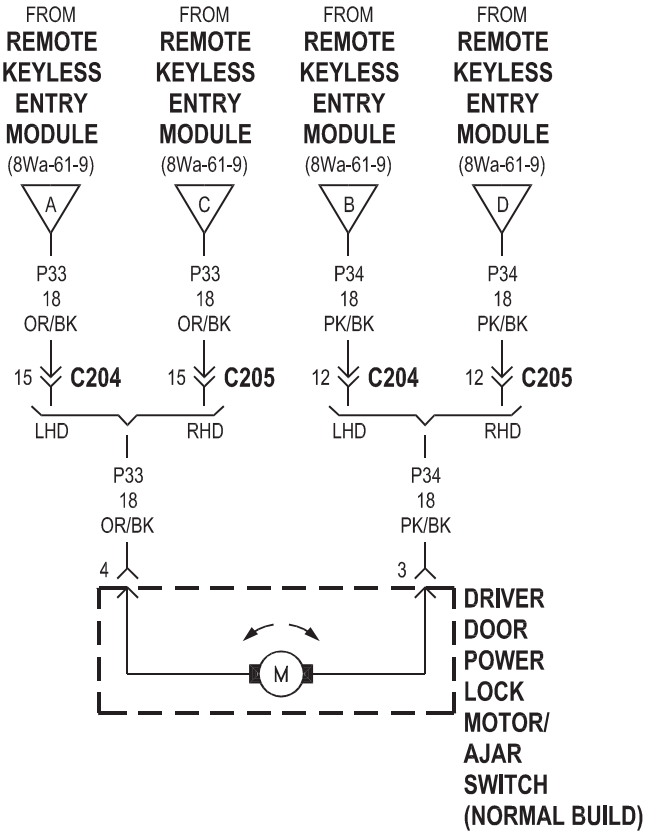
FROM REMOTE KEYLESS ENTRY MODULE (8Wa-61-9)
A
C
B
D
P33 18 OR/BK
P34 18 PK/BK
15 C204
15 C205
12 C204
12 C205
LHD
RHD
4
3
M
DRIVER DOOR POWER LOCK MOTOR/ AJAR SWITCH (NORMAL BUILD)

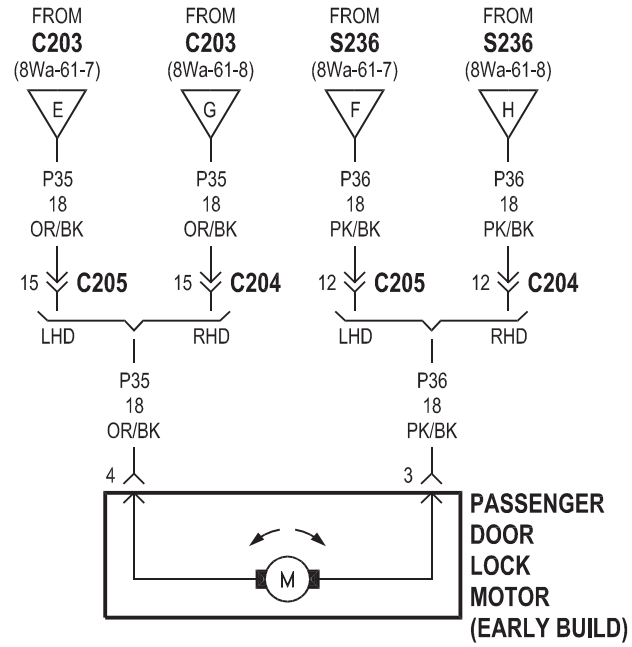
FROM C203 (8Wa-61-7)
FROM C203 (8Wa-61-8)
FROM S236 (8Wa-61-7)
FROM S236 (8Wa-61-8)
E
G
F
H
P35 18 OR/BK
P36 18 PK/BK
15 C205
15 C204
12 C205
12 C204
LHD
RHD
4
3
M
PASSENGER DOOR LOCK MOTOR (EARLY BUILD)

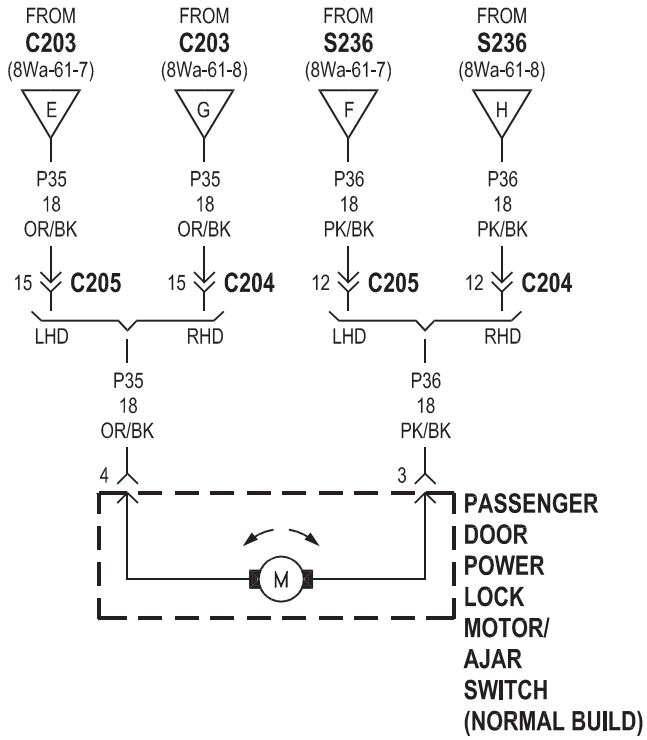
FROM C203 (8Wa-61-7)
FROM C203 (8Wa-61-8)
FROM S236 (8Wa-61-7)
FROM S236 (8Wa-61-8)
E
G
F
H
P35 18 OR/BK
P36 18 PK/BK
15 C205
15 C204
12 C205
12 C204
LHD
RHD
4
3
M
PASSENGER DOOR POWER LOCK MOTOR/ AJAR SWITCH (NORMAL BUILD)

LHD NORMAL BUILD

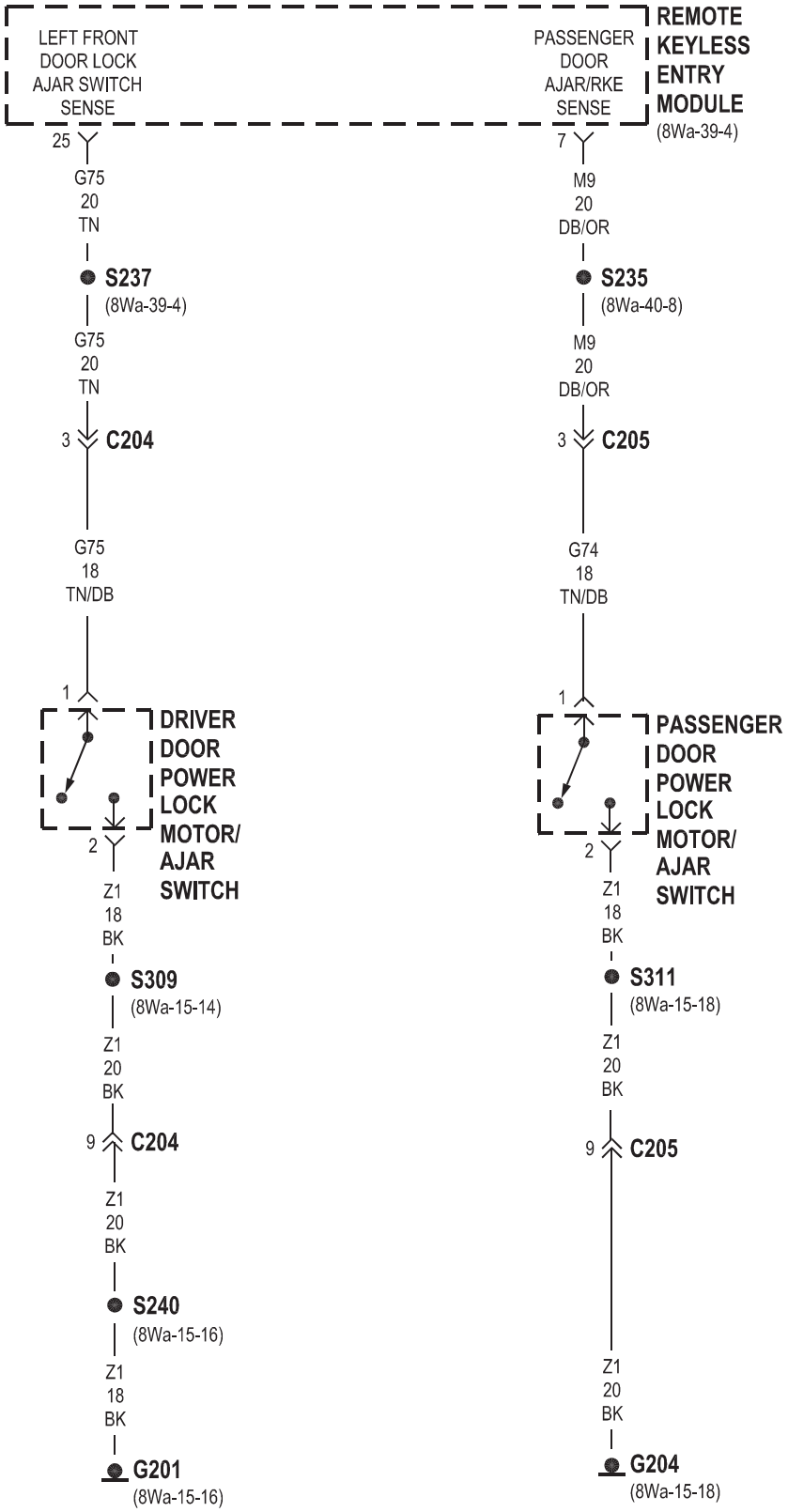

RHD NORMAL BUILD

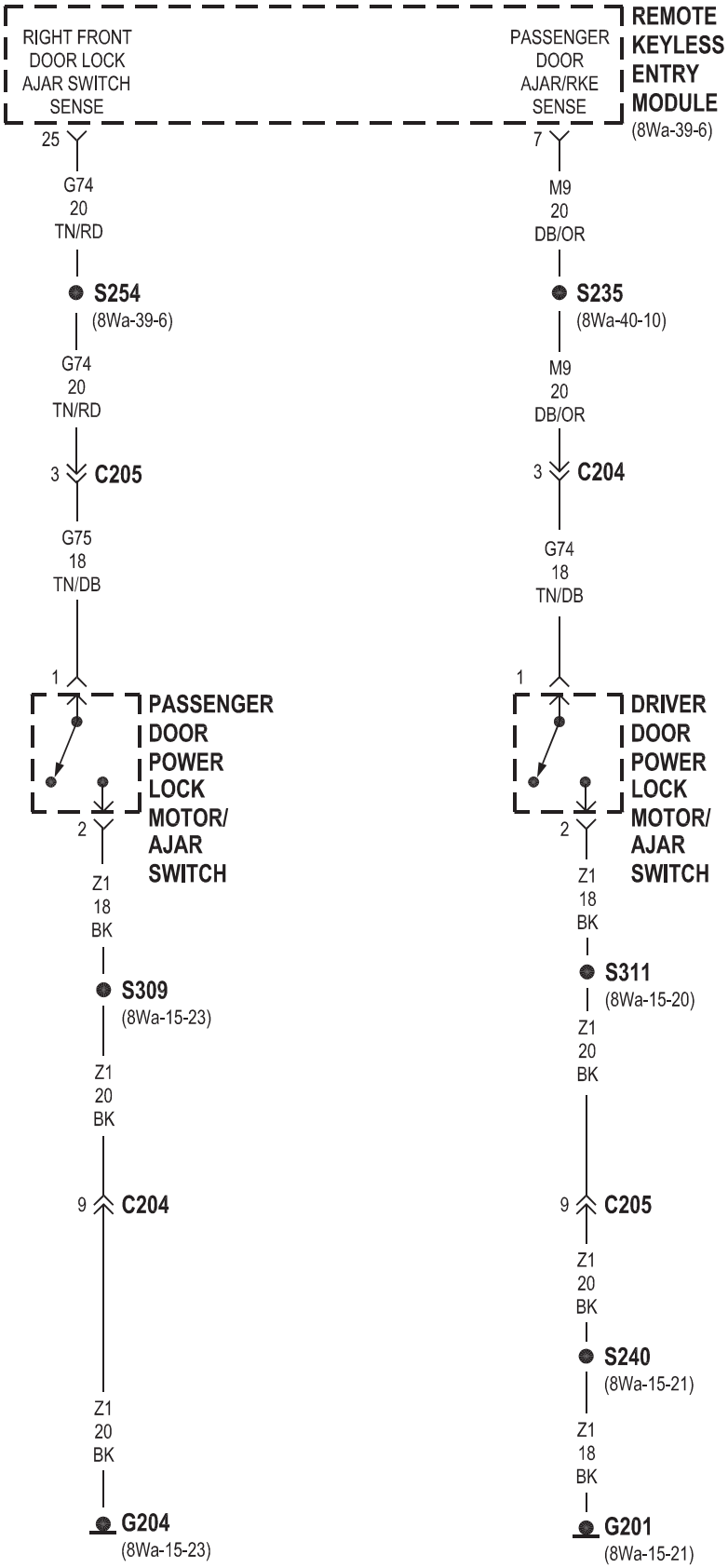

8W-62 POWER MIRRORS

Component	Page
Fuse 2 (FB)	8Wa-62-2
Fuse 8 (PDC)	8Wa-62-3
Fuse 18 (FB)	8Wa-62-3
Fuse 18 (PDC)	8Wa-62-2
Fuse Block	8Wa-62-2, 3
G201	8Wa-62-2, 4, 5
G204	8Wa-62-4, 5
Headlamp Switch	8Wa-62-2
Left Power Mirror	8Wa-62-3, 4, 5, 6
Power Distribution Center	8Wa-62-2, 3
Power Mirror Switch	8Wa-62-2, 4, 5, 6
Rear Window Defogger Switch	8Wa-62-3
Right Power Mirror	8Wa-62-3, 4, 5, 6

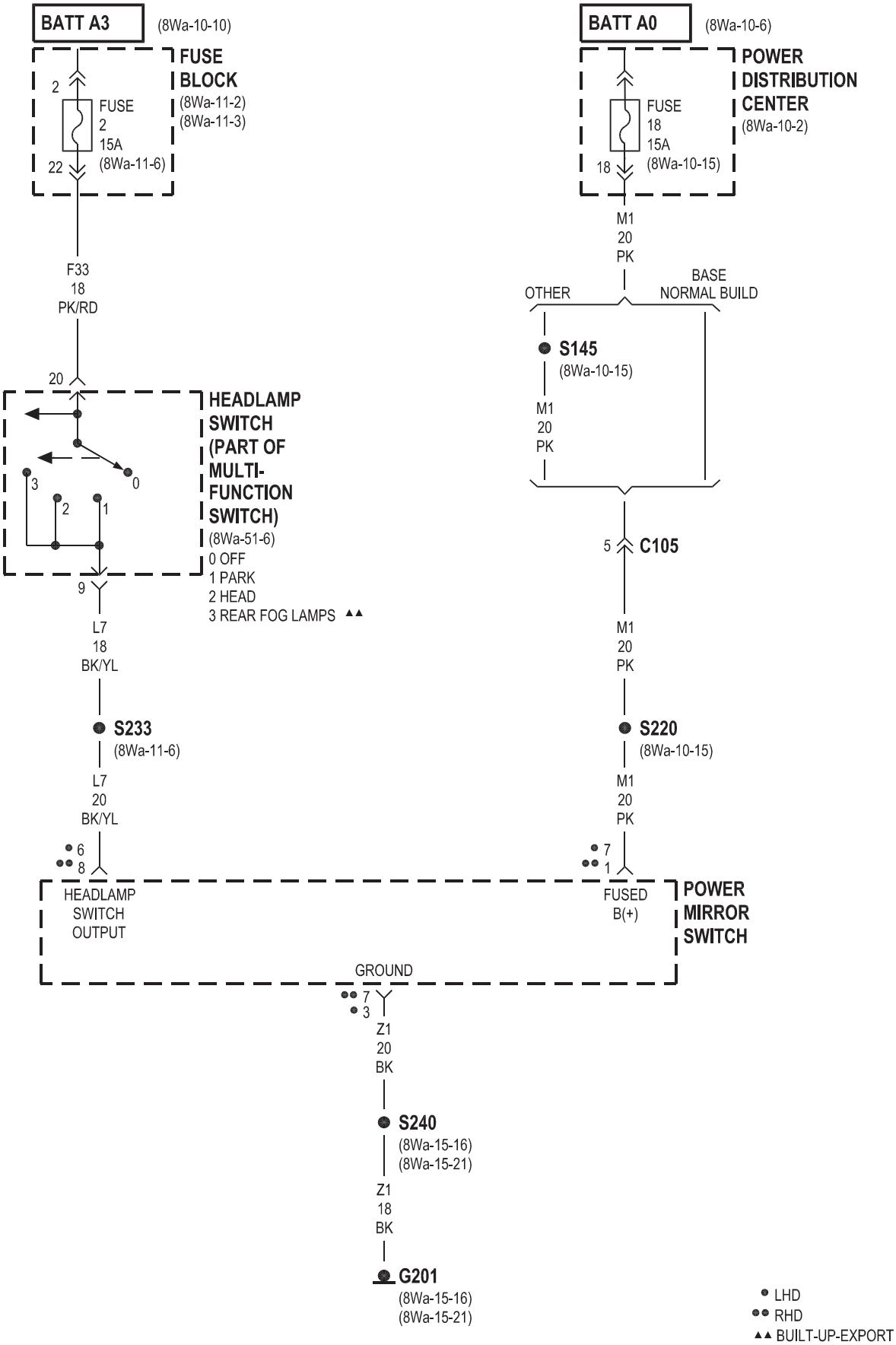
BATT A3
(8Wa-10-10)
FUSE BLOCK
(8Wa-11-2)
(8Wa-11-3)
2
FUSE 2 15A
(8Wa-11-6)
22
F33
18
PK/RD
20
HEADLAMP SWITCH (PART OF MULTI-FUNCTION SWITCH)
(8Wa-51-6)
0 OFF
1 PARK
2 HEAD
3 REAR FOG LAMPS ▲▲
3
2
1
0
9
L7
18
BK/YL
S233
(8Wa-11-6)
L7
20
BK/YL
6
8
BATT A0
(8Wa-10-6)
POWER DISTRIBUTION CENTER
(8Wa-10-2)
FUSE 18 15A
(8Wa-10-15)
18
M1
20
PK
OTHER
BASE NORMAL BUILD
S145
(8Wa-10-15)
M1
20
PK
5
C105
M1
20
PK
S220
(8Wa-10-15)
M1
20
PK
7
1
HEADLAMP SWITCH OUTPUT
FUSED B(+)
POWER MIRROR SWITCH
GROUND
7
3
Z1
20
BK
S240
(8Wa-15-16)
(8Wa-15-21)
Z1
18
BK
G201
(8Wa-15-16)
(8Wa-15-21)
● LHD
●● RHD
▲▲ BUILT-UP-EXPORT

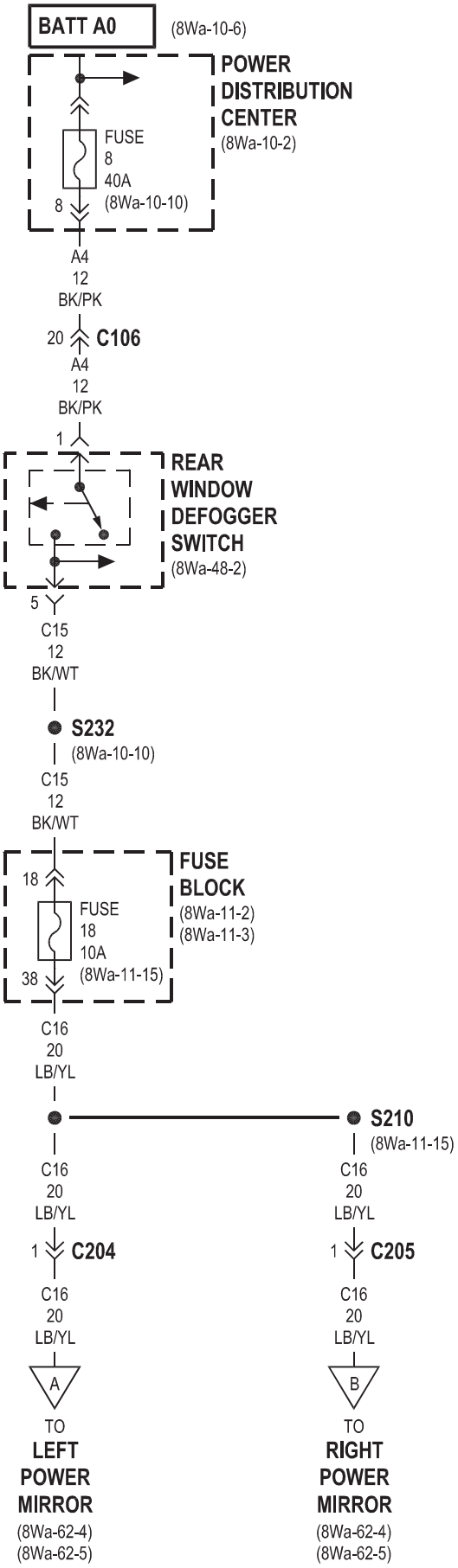
BATT A0
(8Wa-10-6)
POWER DISTRIBUTION CENTER
(8Wa-10-2)
FUSE
8
40A
(8Wa-10-10)
8
A4
12
BK/PK
20
C106
A4
12
BK/PK
1
REAR WINDOW DEFOGGER SWITCH
(8Wa-48-2)
5
C15
12
BK/WT
S232
(8Wa-10-10)
C15
12
BK/WT
18
FUSE BLOCK
(8Wa-11-2)
(8Wa-11-3)
FUSE
18
10A
(8Wa-11-15)
38
C16
20
LB/YL
S210
(8Wa-11-15)
C16
20
LB/YL
C16
20
LB/YL
1
C204
1
C205
C16
20
LB/YL
C16
20
LB/YL
A
B
TO
LEFT POWER MIRROR
(8Wa-62-4)
(8Wa-62-5)
TO
RIGHT POWER MIRROR
(8Wa-62-4)
(8Wa-62-5)

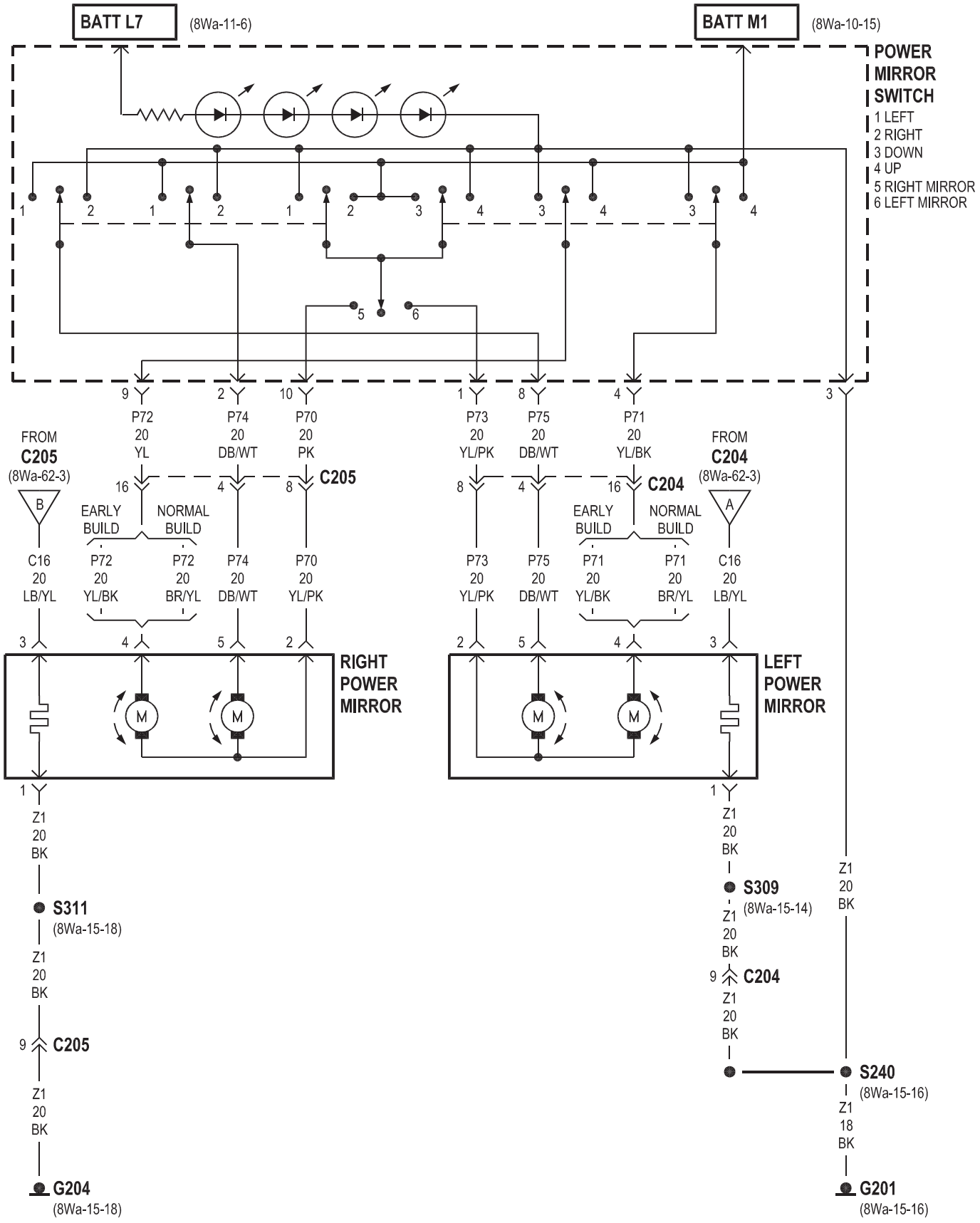
BATT L7
(8Wa-11-6)
BATT M1
(8Wa-10-15)
POWER MIRROR SWITCH
1 LEFT
2 RIGHT
3 DOWN
4 UP
5 RIGHT MIRROR
6 LEFT MIRROR
P72 20 YL
P74 20 DB/WT
P70 20 PK
P73 20 YL/PK
P75 20 DB/WT
P71 20 YL/BK
FROM C205 (8Wa-62-3)
FROM C204 (8Wa-62-3)
C205
C204
EARLY BUILD
NORMAL BUILD
C16 20 LB/YL
P72 20 YL/BK
P72 20 BR/YL
P74 20 DB/WT
P70 20 YL/PK
P73 20 YL/PK
P75 20 DB/WT
P71 20 YL/BK
P71 20 BR/YL
RIGHT POWER MIRROR
LEFT POWER MIRROR
Z1 20 BK
S311
(8Wa-15-18)
S309
(8Wa-15-14)
S240
(8Wa-15-16)
Z1 18 BK
G204
(8Wa-15-18)
G201
(8Wa-15-16)

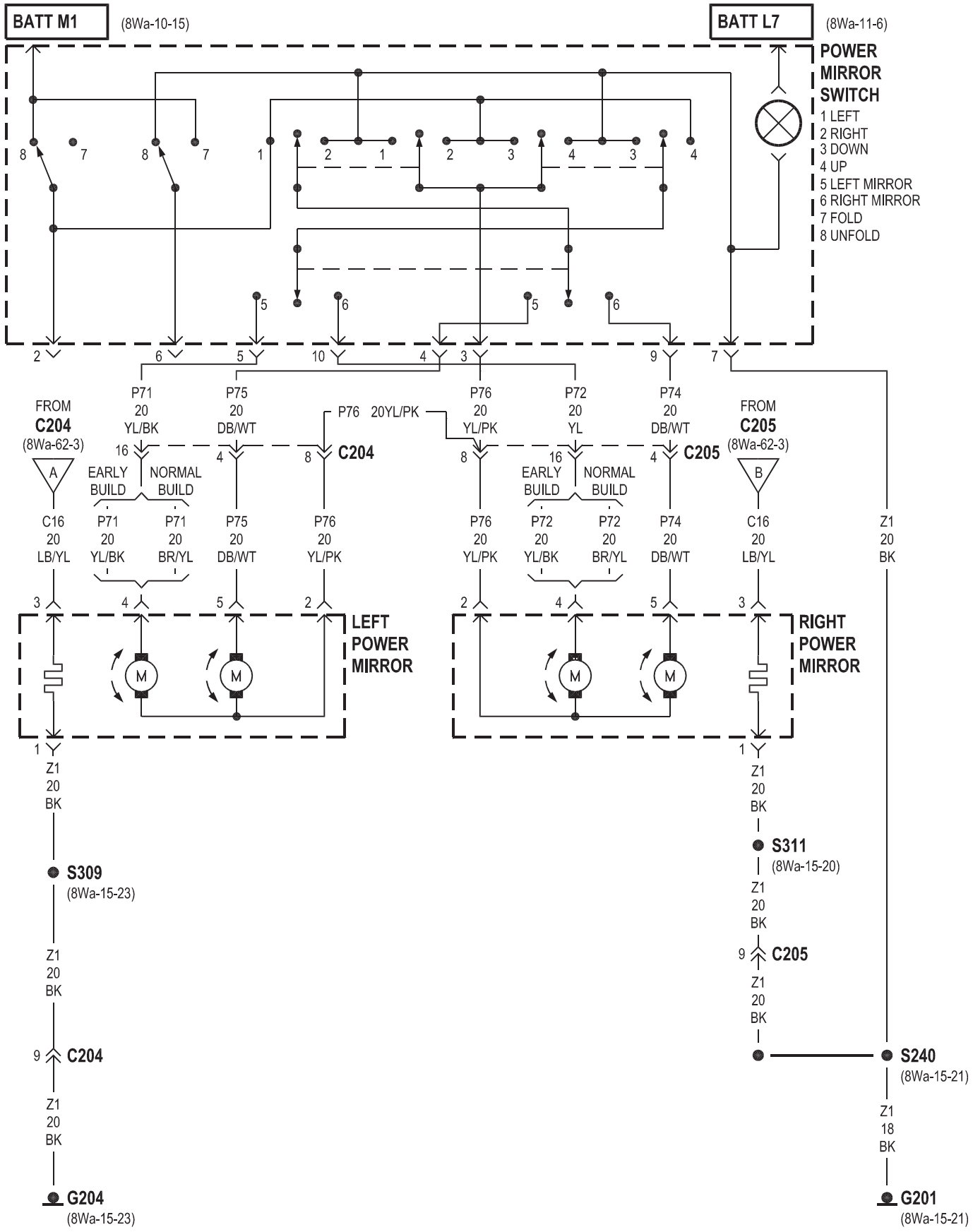
BATT M1
(8Wa-10-15)
BATT L7
(8Wa-11-6)
POWER MIRROR SWITCH
1 LEFT
2 RIGHT
3 DOWN
4 UP
5 LEFT MIRROR
6 RIGHT MIRROR
7 FOLD
8 UNFOLD
FROM C204 (8Wa-62-3)
A
P71 20 YL/BK
P75 20 DB/WT
P76 20YL/PK
P76 20 YL/PK
P72 20 YL
P74 20 DB/WT
FROM C205 (8Wa-62-3)
B
C204
C205
EARLY BUILD
NORMAL BUILD
C16 20 LB/YL
P71 20 YL/BK
P71 20 BR/YL
P75 20 DB/WT
P76 20 YL/PK
P76 20 YL/PK
P72 20 YL/BK
P72 20 BR/YL
P74 20 DB/WT
C16 20 LB/YL
Z1 20 BK
LEFT POWER MIRROR
RIGHT POWER MIRROR
M
Z1 20 BK
S309
(8Wa-15-23)
Z1 20 BK
C204
Z1 20 BK
G204
(8Wa-15-23)
Z1 20 BK
S311
(8Wa-15-20)
Z1 20 BK
C205
Z1 20 BK
S240
(8Wa-15-21)
Z1 18 BK
G201
(8Wa-15-21)

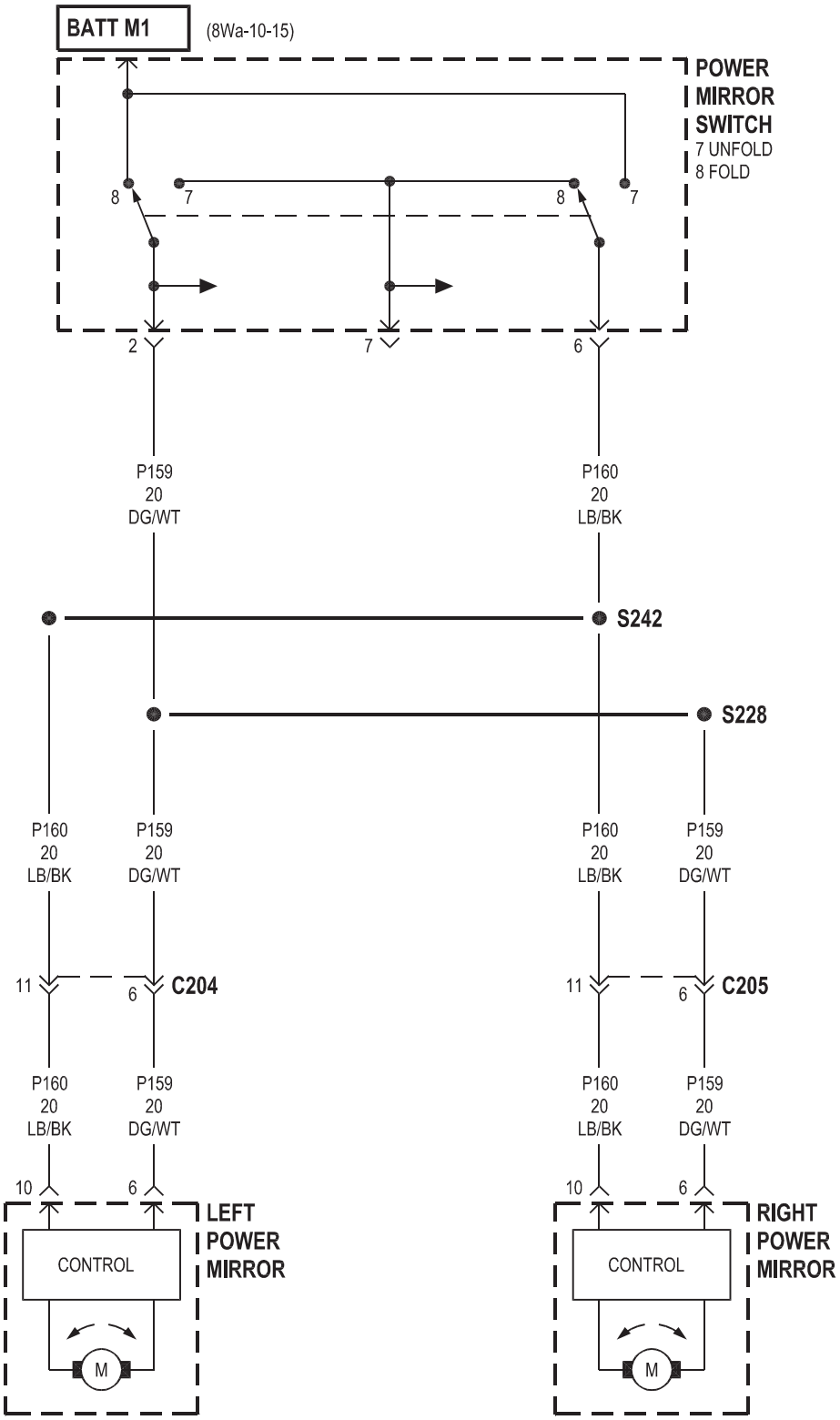
BATT M1
(8Wa-10-15)
POWER MIRROR SWITCH
7 UNFOLD
8 FOLD
8
7
8
7
2
7
6
P159
20
DG/WT
P160
20
LB/BK
S242
S228
P160
20
LB/BK
P159
20
DG/WT
P160
20
LB/BK
P159
20
DG/WT
11
6
C204
11
6
C205
P160
20
LB/BK
P159
20
DG/WT
P160
20
LB/BK
P159
20
DG/WT
10
6
10
6
CONTROL
M
LEFT POWER MIRROR
CONTROL
M
RIGHT POWER MIRROR

8W-63 POWER SEAT

Component	Page
Driver Heated Seat Back	8Wa-63-5
Driver Heated Seat Cushion	8Wa-63-5
Driver Heated Seat Module	8Wa-63-5
Driver Heated Seat Switch	8Wa-63-5
Fuse 4 (FB)	8Wa-63-4
Fuse 4 (PDC)	8Wa-63-4
Fuse 6 (FB)	8Wa-63-4
Fuse 6 (PDC)	8Wa-63-2, 3
Fuse 17 (FB)	8Wa-63-4
Fuse Block	8Wa-63-4
G201	8Wa-63-2, 3, 4, 5, 6
Heated Seat Relay	8Wa-63-4
Passenger Heated Seat Back	8Wa-63-6
Passenger Heated Seat Cushion	8Wa-63-6
Passenger Heated Seat Module	8Wa-63-6
Passenger Heated Seat Switch	8Wa-63-6
Power Distribution Center	8Wa-63-2, 3, 4
Power Seat Motor	8Wa-63-2, 3
Power Seat Switch	8Wa-63-2, 3

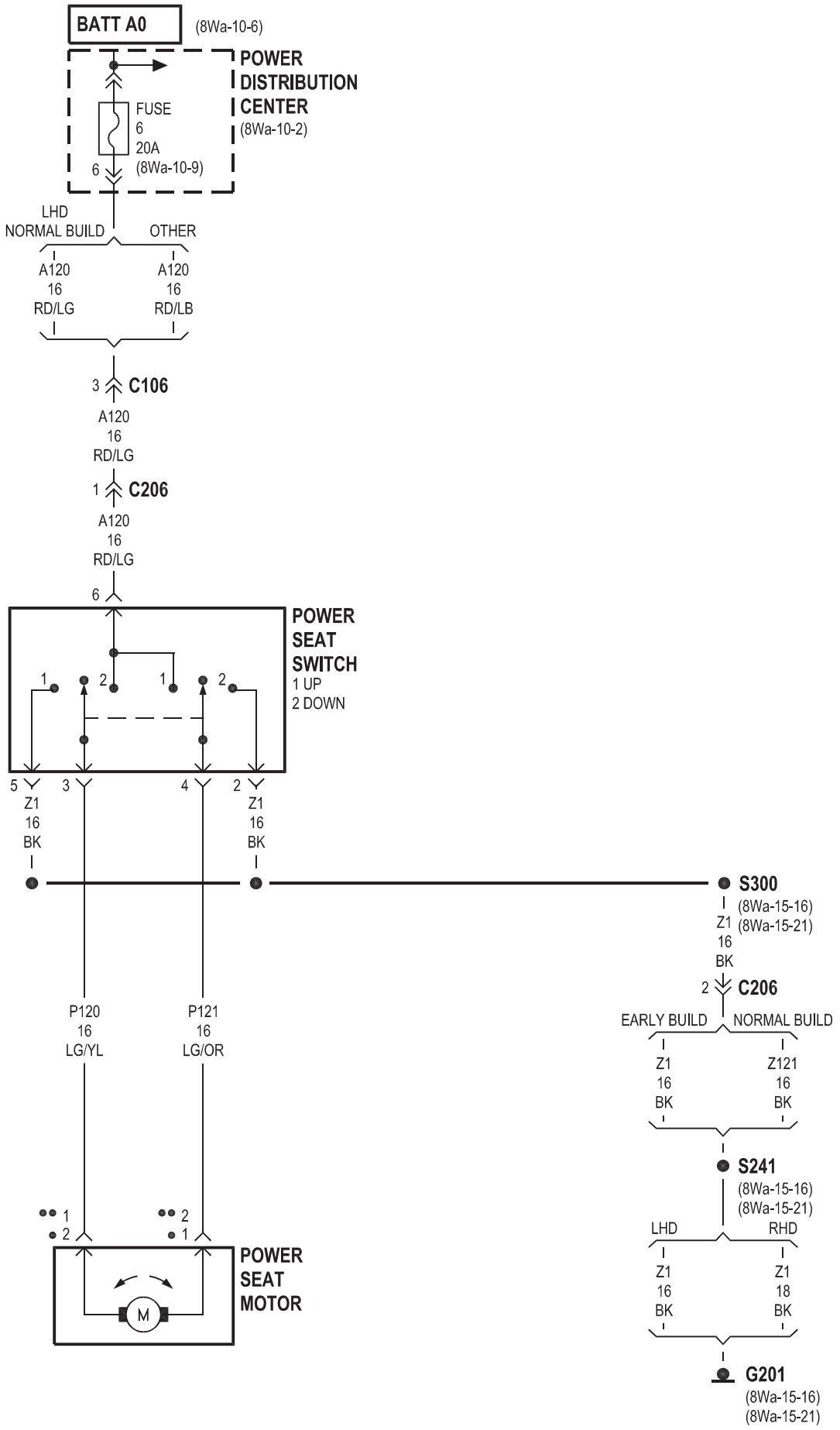
BATT A0
(8Wa-10-6)
POWER DISTRIBUTION CENTER
(8Wa-10-2)
FUSE 6 20A
(8Wa-10-9)
6
LHD NORMAL BUILD
OTHER
A120 16 RD/LG
A120 16 RD/LB
3
C106
A120 16 RD/LG
1
C206
A120 16 RD/LG
6
POWER SEAT SWITCH
1 UP
2 DOWN
5
3
4
2
Z1 16 BK
Z1 16 BK
S300
(8Wa-15-16)
(8Wa-15-21)
Z1 16 BK
2
C206
EARLY BUILD
NORMAL BUILD
Z1 16 BK
Z121 16 BK
S241
(8Wa-15-16)
(8Wa-15-21)
LHD
RHD
Z1 16 BK
Z1 18 BK
G201
(8Wa-15-16)
(8Wa-15-21)
P120 16 LG/YL
P121 16 LG/OR
POWER SEAT MOTOR
M
LHD
RHD

NORMAL BUILD HEATED SEATS

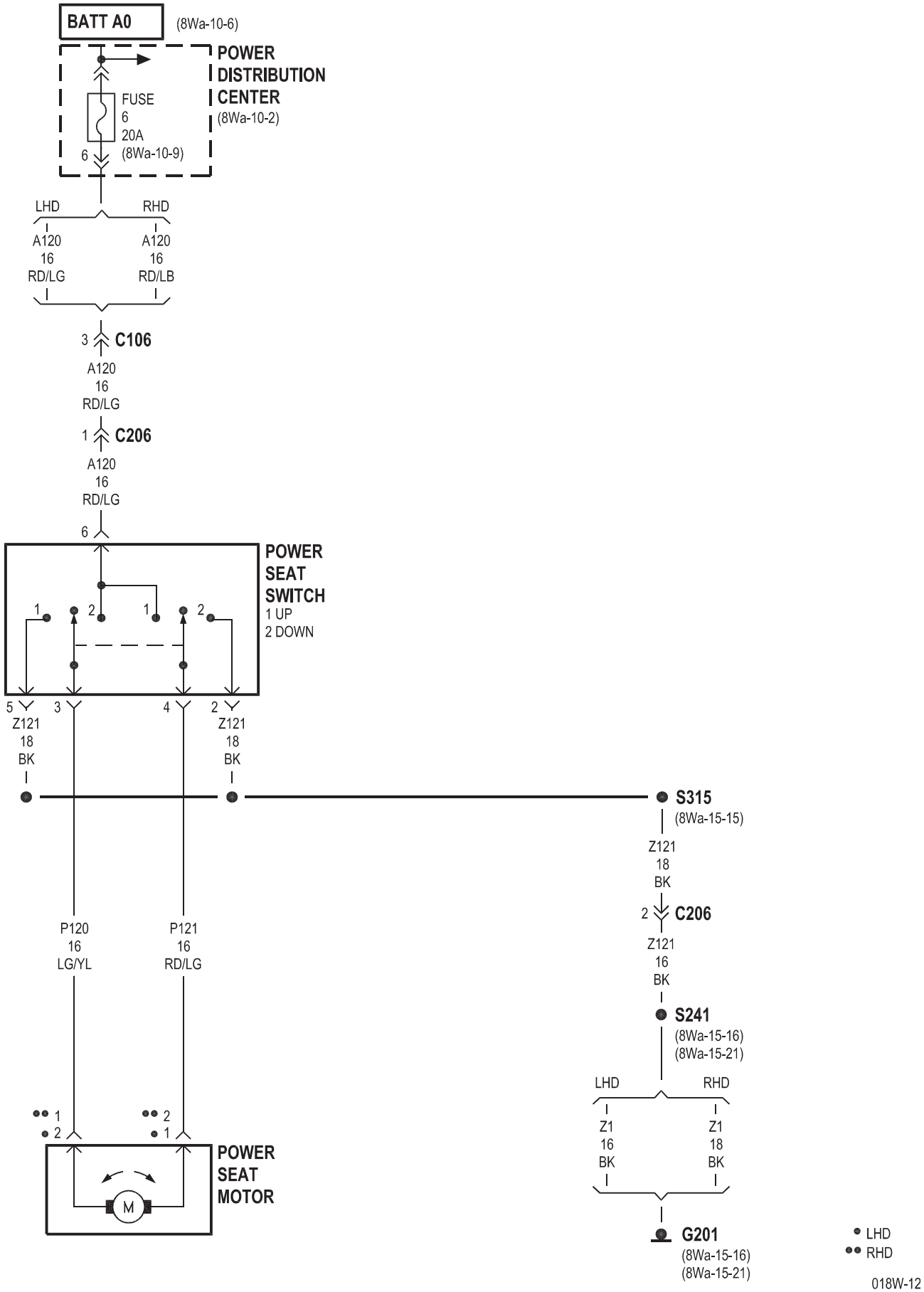

PTI06303

018W-12

NORMAL BUILD HEATED SEATS

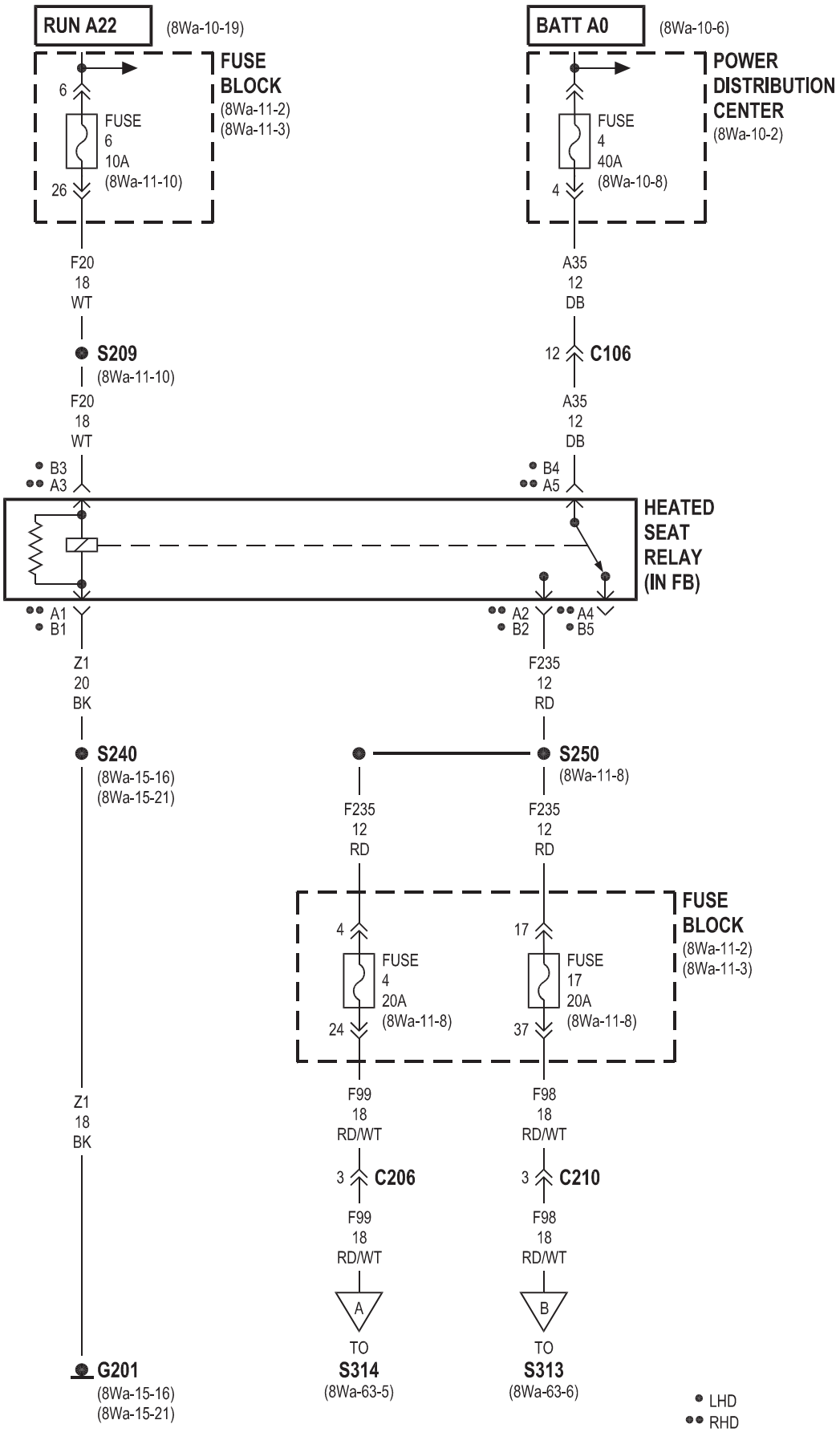

NORMAL BUILD HEATED SEATS

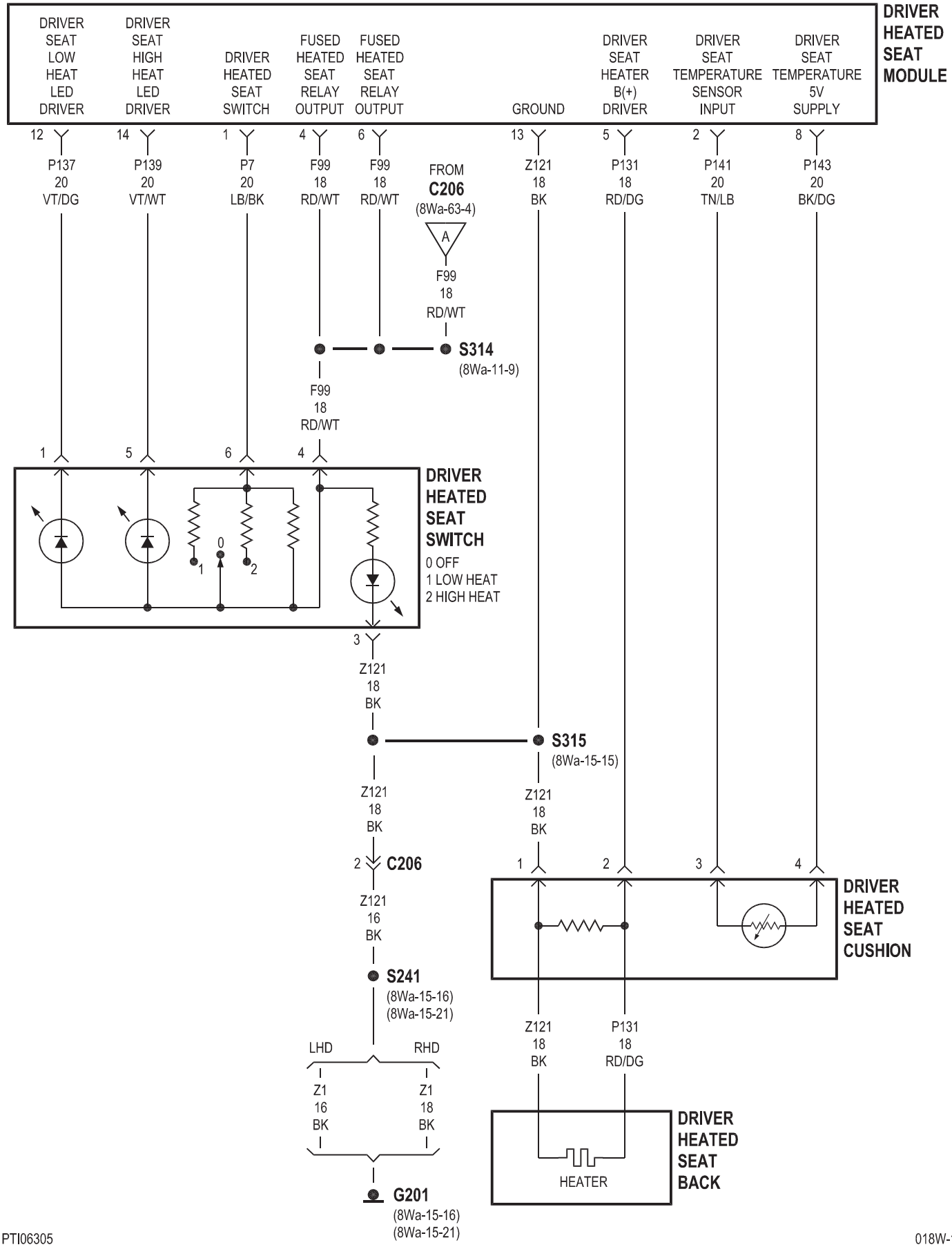

NORMAL BUILD HEATED SEATS

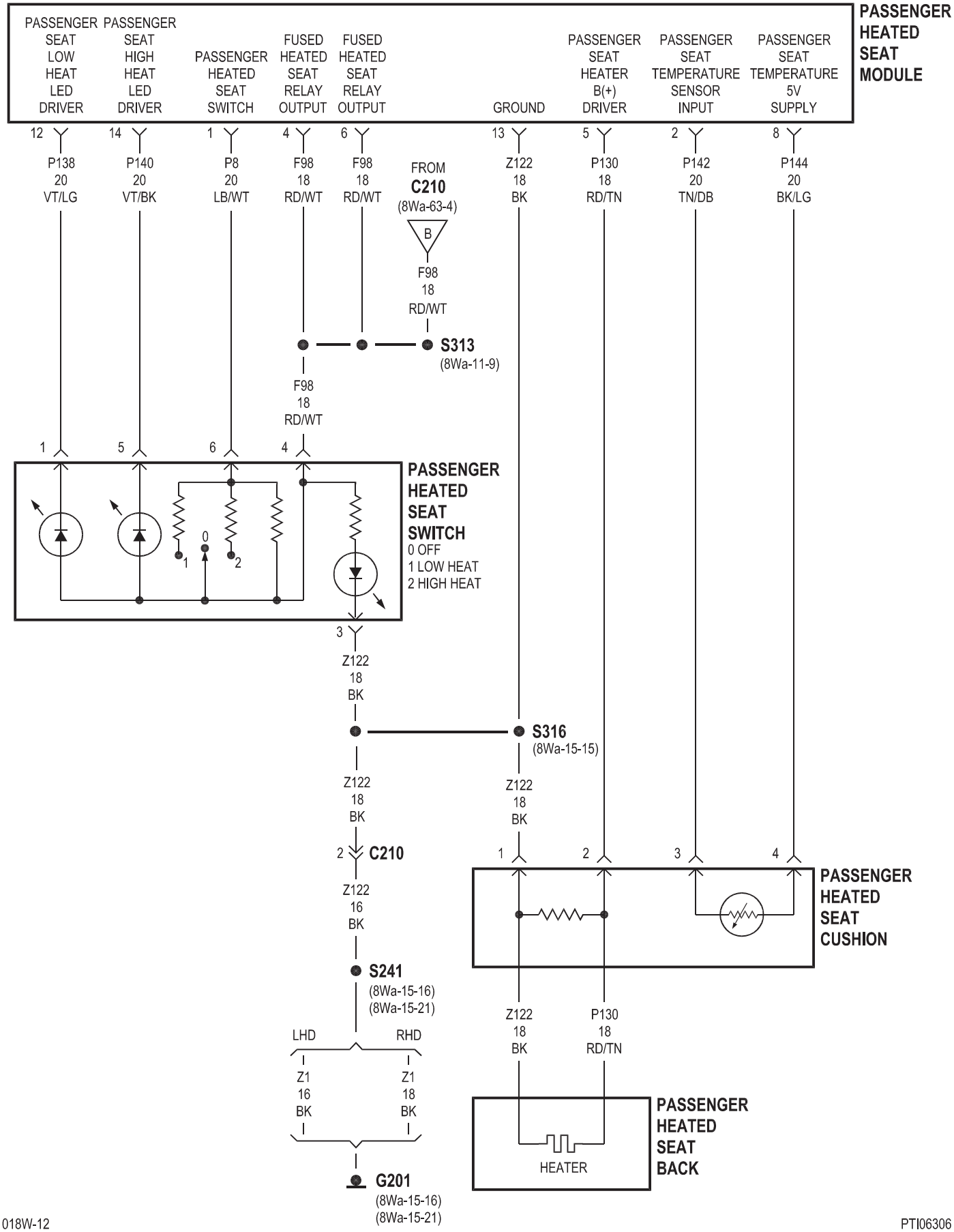

8W-64 POWER SUNROOF

Component	Page
Fuse 14 (FB)	8Wa-64-2
Fuse Block	8Wa-64-2
G204	8Wa-64-2
Power Sunroof Module	8Wa-64-2
Sunroof Motor	8Wa-64-2
Sunroof Switch	8Wa-64-2

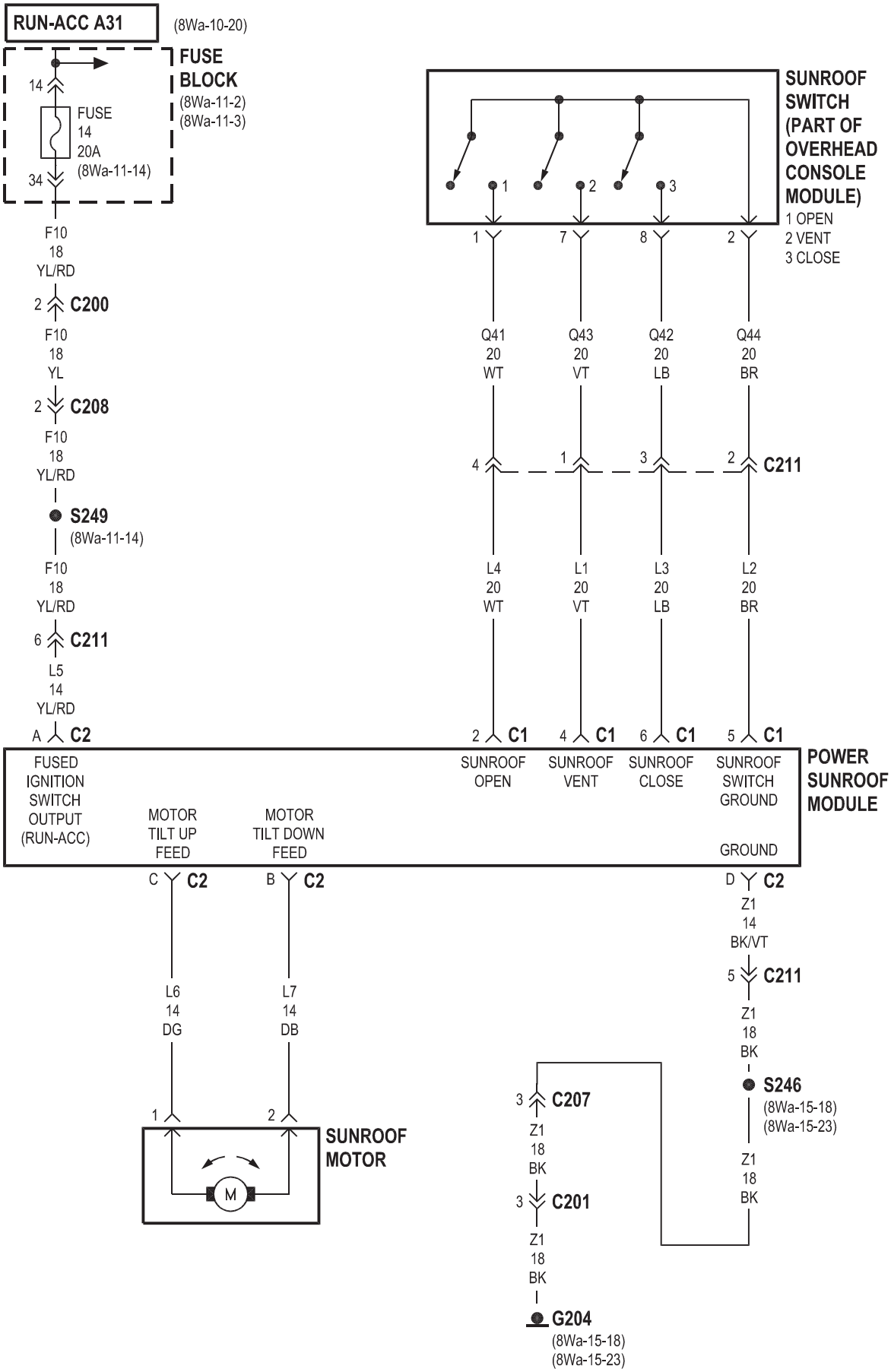
RUN-ACC A31
(8Wa-10-20)
FUSE BLOCK
(8Wa-11-2)
(8Wa-11-3)
14
FUSE 14 20A
(8Wa-11-14)
34
F10 18 YL/RD
2 C200
F10 18 YL
2 C208
F10 18 YL/RD
S249
(8Wa-11-14)
F10 18 YL/RD
6 C211
L5 14 YL/RD
A C2
SUNROOF SWITCH (PART OF OVERHEAD CONSOLE MODULE)
1 OPEN
2 VENT
3 CLOSE
1 7 8 2
Q41 20 WT
Q43 20 VT
Q42 20 LB
Q44 20 BR
4 1 3 2 C211
L4 20 WT
L1 20 VT
L3 20 LB
L2 20 BR
2 C1 4 C1 6 C1 5 C1
FUSED IGNITION SWITCH OUTPUT (RUN-ACC)
MOTOR TILT UP FEED
MOTOR TILT DOWN FEED
SUNROOF OPEN
SUNROOF VENT
SUNROOF CLOSE
SUNROOF SWITCH GROUND
GROUND
POWER SUNROOF MODULE
C C2
B C2
D C2
Z1 14 BK/VT
5 C211
Z1 18 BK
S246
(8Wa-15-18)
(8Wa-15-23)
Z1 18 BK
L6 14 DG
L7 14 DB
1 2
M
SUNROOF MOTOR
3 C207
Z1 18 BK
3 C201
Z1 18 BK
G204
(8Wa-15-18)
(8Wa-15-23)

8W-70 SPLICE INFORMATION

Component	Page
S100	8Wa-10-13
S101	8Wa-20-2
S102	8Wa-10-13
S103	8Wa-10-13
S105	8Wa-30-5
S106	8Wa-70-3
S107	8Wa-70-3
S108	8Wa-30-5
S109	8Wa-70-2
S110	8Wa-30-3
S111	8Wa-15-4, 10
S112	8Wa-30-6
S113	8Wa-15-3
S114	8Wa-31-3
S115	8Wa-11-13
S116	8Wa-11-17
S117	8Wa-50-5
S118	8Wa-50-7
S119	8Wa-10-11
S120	8Wa-15-6, 11
S121	8Wa-15-7, 11
S122	8Wa-10-14
S123	8Wa-10-8
S124	8Wa-10-9
S125	8Wa-11-13
S126	8Wa-18-2
S127	8Wa-30-11
S128	8Wa-15-2, 8
S129	8Wa-10-12
S130	8Wa-30-12
S131	8Wa-15-2, 8
S132	8Wa-10-14
S133	8Wa-10-14
S134	8Wa-10-19
S135	8Wa-70-3
S136	8Wa-10-14
S137	8Wa-31-4
S138	8Wa-39-18
S139	8Wa-18-2
S140	8Wa-15-3, 8
S141	8Wa-15-4, 10
S142	8Wa-11-17
S143	8Wa-15-12
S144	8Wa-11-7
S145	8Wa-10-15
S146	8Wa-15-5, 9
S200	8Wa-42-3
S201	8Wa-18-3
S202	8Wa-15-16, 21
S203	8Wa-52-5
S204	8Wa-44-5
S205	8Wa-44-6
S206	8Wa-44-4
S207	8Wa-60-4, 7
S208	8Wa-11-12
S209	8Wa-11-10
S210	8Wa-11-15
S211	8Wa-11-14
S212	8Wa-52-5
S213	8Wa-15-14, 20
S214	8Wa-10-17
S215	8Wa-10-16
S216	8Wa-15-16, 21
S217	8Wa-11-6
S218	8Wa-52-5
S219	8Wa-61-7, 8
S220	8Wa-10-15
S221	8Wa-10-15
S222	8Wa-11-16
S223	8Wa-15-17, 22
S224	8Wa-11-12
S225	8Wa-11-16
S226	8Wa-11-17
S227	8Wa-11-6
S228	8Wa-62-6
S229	8Wa-15-17, 22
S230	8Wa-44-2
S231	8Wa-40-7
S232	8Wa-10-10
S233	8Wa-11-6
S234	8Wa-10-11
S235	8Wa-40-8, 9, 10, 11
S236	8Wa-61-7, 8
S237	8Wa-39-4, 5
S238	8Wa-41-2
S239	8Wa-15-13, 19
S240	8Wa-15-16, 21
S241	8Wa-15-16, 21
S242	8Wa-62-6
S243	8Wa-61-4
S244	8Wa-10-15
S245	8Wa-10-18
S246	8Wa-15-18, 23
S247	8Wa-11-16
S248	8Wa-44-3
S249	8Wa-11-14
S250	8Wa-11-8
S251	8Wa-39-15
S252	8Wa-39-17
S253	8Wa-40-15
S254	8Wa-39-6
S300	8Wa-15-16, 21
S301	8Wa-61-7, 8
S302	8Wa-61-7, 8
S303	8Wa-15-24
S304	8Wa-15-25
S305	8Wa-10-11
S306	8Wa-15-25
S307	8Wa-11-7
S308	8Wa-51-3
S309	8Wa-15-14, 23
S310	8Wa-15-24
S311	8Wa-15-18, 20
S312	8Wa-11-7
S313	8Wa-11-9
S314	8Wa-11-9
S315	8Wa-15-15
S316	8Wa-15-15

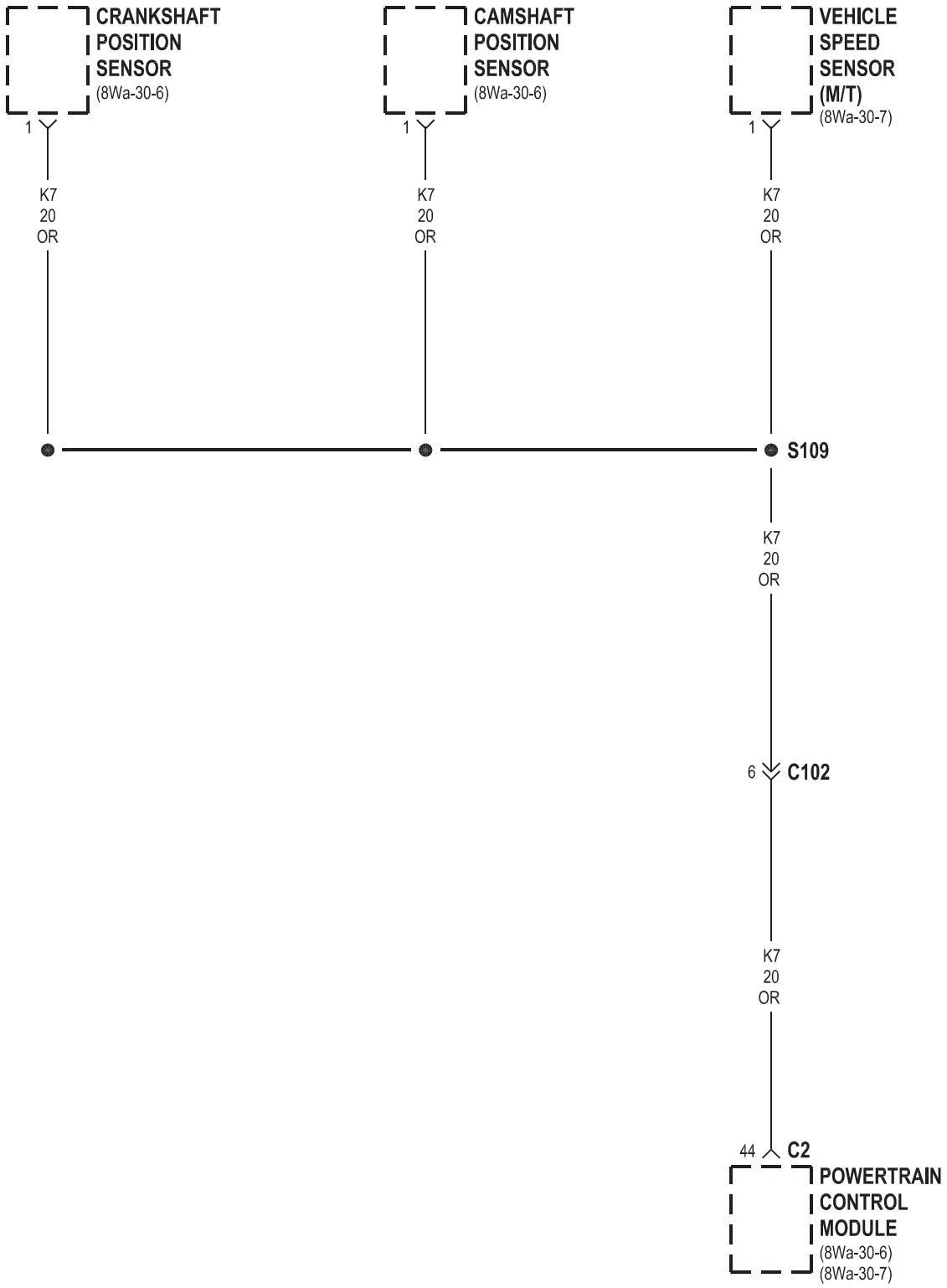
CRANKSHAFT POSITION SENSOR
(8Wa-30-6)
1
K7
20
OR
CAMSHAFT POSITION SENSOR
(8Wa-30-6)
1
K7
20
OR
VEHICLE SPEED SENSOR (M/T)
(8Wa-30-7)
1
K7
20
OR
S109
K7
20
OR
6
C102
K7
20
OR
44
C2
POWERTRAIN CONTROL MODULE
(8Wa-30-6)
(8Wa-30-7)

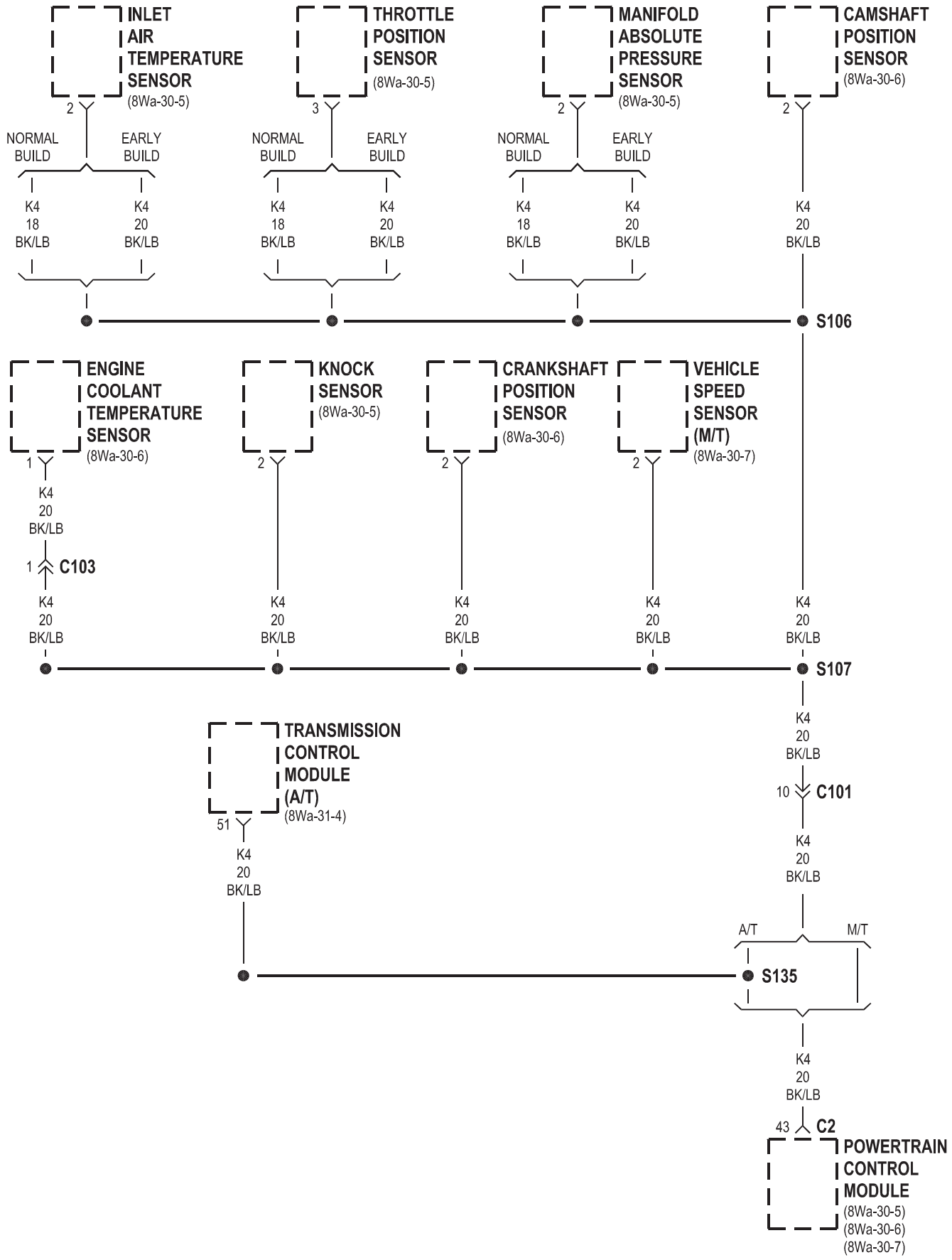
INLET AIR TEMPERATURE SENSOR (8Wa-30-5)
2
NORMAL BUILD
EARLY BUILD
K4 18 BK/LB
K4 20 BK/LB
THROTTLE POSITION SENSOR (8Wa-30-5)
3
NORMAL BUILD
EARLY BUILD
K4 18 BK/LB
K4 20 BK/LB
MANIFOLD ABSOLUTE PRESSURE SENSOR (8Wa-30-5)
2
NORMAL BUILD
EARLY BUILD
K4 18 BK/LB
K4 20 BK/LB
CAMSHAFT POSITION SENSOR (8Wa-30-6)
2
K4 20 BK/LB
S106
ENGINE COOLANT TEMPERATURE SENSOR (8Wa-30-6)
1
K4 20 BK/LB
1 C103
K4 20 BK/LB
KNOCK SENSOR (8Wa-30-5)
2
K4 20 BK/LB
CRANKSHAFT POSITION SENSOR (8Wa-30-6)
2
K4 20 BK/LB
VEHICLE SPEED SENSOR (M/T) (8Wa-30-7)
2
K4 20 BK/LB
K4 20 BK/LB
S107
K4 20 BK/LB
10 C101
K4 20 BK/LB
TRANSMISSION CONTROL MODULE (A/T) (8Wa-31-4)
51
K4 20 BK/LB
A/T
M/T
S135
K4 20 BK/LB
43 C2
POWERTRAIN CONTROL MODULE
(8Wa-30-5)
(8Wa-30-6)
(8Wa-30-7)

2001 PT CRUISER

8W-80 CONNECTOR PINOUTS

Component	Page
A/C Compressor Clutch	8Wa-80-4
A/C-Heater Control Switch	8Wa-80-4
A/C Low Pressure Switch	8Wa-80-4
A/C Pressure Transducer	8Wa-80-4
Ambient Temperature Sensor	8Wa-80-4
Back-Up Lamp Switch	8Wa-80-5
Blower Motor	8Wa-80-5
Blower Motor Resistor Block	8Wa-80-5
Brake Lamp Switch	8Wa-80-5
Brake Transmission Shift Interlock Solenoid	8Wa-80-6
Brake Warning Indicator Switch	8Wa-80-6
C101	8Wa-80-6
C101	8Wa-80-6
C102	8Wa-80-7
C102	8Wa-80-7
C103	8Wa-80-8
C103	8Wa-80-8
C104 (A/T)	8Wa-80-8
C104 (A/T)	8Wa-80-9
C105	8Wa-80-9
C105	8Wa-80-10
C106	8Wa-80-10
C106	8Wa-80-11
C109	8Wa-80-12
C109	8Wa-80-12
C110	8Wa-80-12
C110	8Wa-80-12
C200	8Wa-80-13
C200	8Wa-80-13
C201	8Wa-80-13
C201	8Wa-80-13
C202	8Wa-80-14
C202	8Wa-80-14
C203	8Wa-80-15
C203	8Wa-80-16
C204	8Wa-80-16
C204	8Wa-80-17
C205	8Wa-80-17
C205	8Wa-80-18
C206 (Normal Build)	8Wa-80-18
C206 (Normal Build)	8Wa-80-18
C206 (Early Build)	8Wa-80-19
C206 (Early Build)	8Wa-80-19
C207	8Wa-80-19
C207	8Wa-80-19
C208	8Wa-80-19
C208	8Wa-80-20
C209	8Wa-80-20
C209	8Wa-80-20
C210 (Heated Seats) (Normal Build)	8Wa-80-20
C210 (Heated Seats) (Normal Build)	8Wa-80-20
C211	8Wa-80-21
C211	8Wa-80-21
C300	8Wa-80-21
C300	8Wa-80-21
C301	8Wa-80-21
C301	8Wa-80-22
C302	8Wa-80-22
C302	8Wa-80-22
C303	8Wa-80-23
C303	8Wa-80-23
C304	8Wa-80-23
C304	8Wa-80-23
C305 (Early Build)	8Wa-80-24
C305 (Early Build)	8Wa-80-24
C305 (Normal Build)	8Wa-80-24
C305 (Normal Build)	8Wa-80-24
C306 (Early Build)	8Wa-80-24
C306 (Early Build)	8Wa-80-25
C306 (Normal Build)	8Wa-80-25
C306 (Normal Build)	8Wa-80-25
Camshaft Position Sensor	8Wa-80-25
Cargo Lamp	8Wa-80-25
Center High Mounted Stop Lamp	8Wa-80-26
Center Stack Lamp	8Wa-80-26
Cigar Lighter	8Wa-80-26
Clockspring	8Wa-80-26
Clutch Pedal Position Switch (Up) (M/T)	8Wa-80-26
Controller Antilock Brake	8Wa-80-27
Crankshaft Position Sensor	8Wa-80-27
Data Link Connector	8Wa-80-28
Dome Lamp	8Wa-80-28
Dome Lamp/Intrusion Sensor (Built-Up-Export)	8Wa-80-28
Driver Airbag Module	8Wa-80-29
Driver Cylinder Lock Switch	8Wa-80-29
Driver Door Lock Motor (Early Build)	8Wa-80-29
Driver Door Lock Switch	8Wa-80-29
Driver Door Power Lock Motor/Ajar Switch (Normal Build)	8Wa-80-30
Driver Heated Seat Cushion (Normal Build)	8Wa-80-30
Driver Heated Seat Module (Normal Build)	8Wa-80-30
Driver Heated Seat Switch (Normal Build)	8Wa-80-30
Driver Seat Belt Switch	8Wa-80-31
EGR Solenoid	8Wa-80-31
Engine Coolant Temperature Sensor	8Wa-80-31
Engine Oil Pressure Switch	8Wa-80-31
EVAP Purge Solenoid	8Wa-80-31

Component	Page
Front Power Window Switch (Early Build)	8Wa-80-32
Front Power Window Switch (Normal Build)	8Wa-80-32
Front Washer Pump Motor	8Wa-80-32
Front Wiper Motor	8Wa-80-33
Front Wiper/Washer Switch	8Wa-80-33
Fuel Injector No. 1	8Wa-80-33
Fuel Injector No. 2	8Wa-80-33
Fuel Injector No. 3	8Wa-80-34
Fuel Injector No. 4	8Wa-80-34
Fuel Pump Module	8Wa-80-34
Generator	8Wa-80-34
Headlamp Leveling Switch (Built-Up-Export)	8Wa-80-34
High Note Horn	8Wa-80-35
Hood Ajar Switch	8Wa-80-35
Idle Air Control Motor	8Wa-80-35
Ignition Coil	8Wa-80-35
Ignition Switch	8Wa-80-35
Inlet Air Temperature Sensor	8Wa-80-36
Input Speed Sensor	8Wa-80-36
Instrument Cluster C1	8Wa-80-36
Instrument Cluster C2	8Wa-80-37
Knock Sensor	8Wa-80-37
Leak Detection Pump	8Wa-80-37
Left Back-Up Lamp	8Wa-80-37
Left Fog Lamp	8Wa-80-37
Left Front Door Ajar Switch (Base) (Normal Build)	8Wa-80-38
Left Front Door Speaker	8Wa-80-38
Left Front Park/Turn Signal Lamp	8Wa-80-38
Left Front Power Window Motor	8Wa-80-38
Left Front Side Marker (Built-Up-Export)	8Wa-80-38
Left Front Wheel Speed Sensor	8Wa-80-39
Left High Beam Headlamp	8Wa-80-39
Left Instrument Panel Speaker	8Wa-80-39
Left Lavalier Module (Built-Up-Export)	8Wa-80-39
Left License Lamp (Built-Up-Export)	8Wa-80-39
Left Low Beam Headlamp	8Wa-80-40
Left Power Mirror	8Wa-80-40
Left Rear Door Power Lock Motor	8Wa-80-40
Left Rear Fog Lamp (LHD)	8Wa-80-40
Left Rear Power Window Motor	8Wa-80-41
Left Rear Power Window Switch (Normal Build)	8Wa-80-41
Left Rear Speaker	8Wa-80-41
Left Rear Turn Signal Lamp	8Wa-80-41
Left Rear Wheel Speed Sensor	8Wa-80-41
Left Seat Airbag	8Wa-80-42
Left Seat Belt Tensioner	8Wa-80-42
Left Side Impact Airbag Control Module (Full Options)	8Wa-80-42
Left Tail/Stop Lamp	8Wa-80-42
Left Turn Signal Indicator	8Wa-80-42
Left Visor/Vanity Lamp	8Wa-80-43
License Lamp (Except Built-Up-Export)	8Wa-80-43
Liftgate Ajar Switch	8Wa-80-43
Liftgate Cylinder Lock Switch	8Wa-80-43
Liftgate Power Lock Motor	8Wa-80-43
Low Note Horn	8Wa-80-44
Manifold Absolute Pressure Sensor	8Wa-80-44
Map/Reading Lamps	8Wa-80-44
Multi-Function Switch	8Wa-80-44
Occupant Restraint Controller	8Wa-80-45
Output Speed Sensor	8Wa-80-46
Overhead Console Module	8Wa-80-46
Oxygen Sensor 1/1 Upstream	8Wa-80-46
Oxygen Sensor 1/2 Downstream	8Wa-80-46
Passenger Airbag	8Wa-80-47
Passenger Cylinder Lock Switch	8Wa-80-47
Passenger Door Lock Motor (Early Build)	8Wa-80-47
Passenger Door Lock Switch	8Wa-80-47
Passenger Door Power Lock Motor/Ajar Switch (Normal Build)	8Wa-80-47
Passenger Heated Seat Cushion (Normal Build)	8Wa-80-48
Passenger Heated Seat Module (Normal Build)	8Wa-80-48
Passenger Heated Seat Switch (Normal Build)	8Wa-80-48
Passenger Seat Belt Switch (RHD)	8Wa-80-48
Power Mirror Switch (LHD)	8Wa-80-49
Power Mirror Switch (RHD)	8Wa-80-49
Power Outlet	8Wa-80-49
Power Seat Motor	8Wa-80-50
Power Seat Switch	8Wa-80-50
Power Steering Pressure Switch	8Wa-80-50
Power Sunroof Module C1	8Wa-80-50
Power Sunroof Module C2	8Wa-80-51
Powertrain Control Module C1	8Wa-80-51
Powertrain Control Module C2	8Wa-80-52
Radiator Fan Motor	8Wa-80-53
Radio C1	8Wa-80-53
Radio C2	8Wa-80-53
Radio C3	8Wa-80-53
Rear Power Outlet	8Wa-80-54
Rear Power Window Switch (Early Build)	8Wa-80-54
Rear Window Defogger Switch	8Wa-80-54
Rear Wiper Motor	8Wa-80-54
Rear Wiper Switch	8Wa-80-54
Remote Keyless Entry Antenna (Japan) (Normal Build)	8Wa-80-55
Remote Keyless Entry Module	8Wa-80-55
Right Back-Up Lamp	8Wa-80-56

Component	Page
Right Fog Lamp	8Wa-80-56
Right Front Door Ajar Switch (Base) (Normal Build)	8Wa-80-56
Right Front Door Speaker	8Wa-80-56
Right Front Park/Turn Signal Lamp	8Wa-80-56
Right Front Power Window Motor	8Wa-80-57
Right Front Side Marker (Built-Up-Export)	8Wa-80-57
Right Front Wheel Speed Sensor	8Wa-80-57
Right High Beam Headlamp	8Wa-80-57
Right Instrument Panel Speaker	8Wa-80-57
Right Lavalier Module (Built-Up-Export)	8Wa-80-58
Right License Lamp (Built-Up-Export)	8Wa-80-58
Right Low Beam Headlamp	8Wa-80-58
Right Power Mirror	8Wa-80-58
Right Rear Door Power Lock Motor	8Wa-80-59
Right Rear Fog Lamp (RHD)	8Wa-80-59
Right Rear Power Window Motor	8Wa-80-59
Right Rear Power Window Switch (Normal Build)	8Wa-80-59
Right Rear Speaker	8Wa-80-59
Right Rear Turn Signal Lamp	8Wa-80-60
Right Rear Wheel Speed Sensor	8Wa-80-60
Right Seat Airbag	8Wa-80-60
Right Seat Belt Tensioner	8Wa-80-60
Right Side Impact Airbag Control Module (Full Options)	8Wa-80-60
Right Tail/Stop Lamp	8Wa-80-61
Right Turn Signal Indicator	8Wa-80-61
Right Visor/Vanity Lamp	8Wa-80-61
Sentry Key Immobilizer Module	8Wa-80-61
Siren (Except Base)	8Wa-80-61
Speed Control Servo	8Wa-80-62
Sunroof Motor	8Wa-80-62
Throttle Position Sensor	8Wa-80-62
Traction Control Switch	8Wa-80-62
Transmission Control Module (A/T)	8Wa-80-63
Transmission Range Indicator Illumination (PRNDL)	8Wa-80-64
Transmission Range Sensor (A/T)	8Wa-80-64
Transmission Solenoid/Pressure Switch Assembly	8Wa-80-65
Vehicle Speed Control Switch	8Wa-80-65
Vehicle Speed Sensor (M/T)	8Wa-80-65

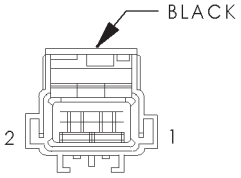

A/C COMPRESSOR CLUTCH

A/C COMPRESSOR CLUTCH - BLACK 2 WAY

CAV	CIRCUIT	FUNCTION
1	C3 20DB/BK	A/C COMPRESSOR CLUTCH RELAY OUTPUT
2	Z1 20BK	GROUND

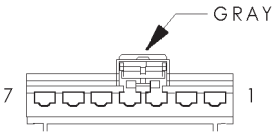

A/C-HEATER CONTROL SWITCH

A/C-HEATER CONTROL SWITCH - GRAY 7 WAY

CAV	CIRCUIT	FUNCTION
1	Z8 14BK/VT	GROUND
2	C7 14BK/TN	BLOWER MOTOR HIGH DRIVER
3	C6 18LB	BLOWER MOTOR M2 DRIVER
4	C5 18LG	BLOWER MOTOR M1 DRIVER
5	C4 18TN/BK	BLOWER MOTOR LOW DRIVER
6	C21 20DB/OR	A/C SWITCH SENSE
7	E2 20OR	PANEL LAMPS DRIVER

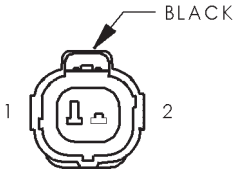

A/C LOW PRESSURE SWITCH

A/C LOW PRESSURE SWITCH - BLACK 2 WAY

CAV	CIRCUIT	FUNCTION
1	C22 20DB/WT	A/C LOW PRESSURE SWITCH OUTPUT
2	C21 20DB/OR	A/C SWITCH SENSE

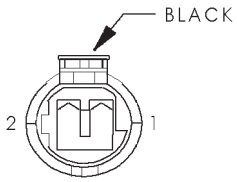

A/C PRESSURE TRANSDUCER

A/C PRESSURE TRANSDUCER - BLACK 2 WAY

CAV	CIRCUIT	FUNCTION
1	C20 20BR	A/C SWITCH SENSE
2	C22 20DB/WT	A/C LOW PRESSURE SWITCH OUTPUT

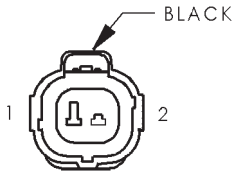

AMBIENT TEMPERATURE SENSOR

AMBIENT TEMPERATURE SENSOR - BLACK 2 WAY

CAV	CIRCUIT	FUNCTION
1	G31 20VT/LG	AMBIENT TEMERATURE SENSOR SIGNAL
2	G32 20BK/LB	SENSOR GROUND

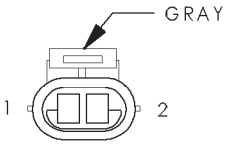

BACK-UP LAMP SWITCH

BACK-UP LAMP SWITCH - GRAY 2 WAY

CAV	CIRCUIT	FUNCTION
1	L1 18VT/BK	BACK-UP LAMP FEED
2	F20 18WT	FUSED IGNITION SWITCH OUTPUT (RUN)

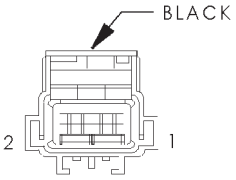

BLOWER MOTOR

BLOWER MOTOR - BLACK 2 WAY

CAV	CIRCUIT	FUNCTION
1	C1 14DG	FUSED IGNITION SWITCH OUTPUT (RUN)
2	C7 14BK/TN	BLOWER MOTOR HIGH DRIVER

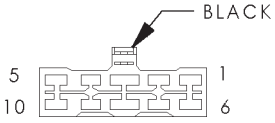

BLOWER MOTOR RESISTOR BLOCK

BLOWER MOTOR RESISTOR BLOCK - BLACK 10 WAY

CAV	CIRCUIT	FUNCTION
1	C5 18LG	BLOWER MOTOR M1 DRIVER
2	-	-
3	-	-
4	-	-
5	C4 18TN/BK	BLOWER MOTOR LOW DRIVER
6	-	-
7	C6 18LB	BLOWER MOTOR M2 DRIVER
8	-	-
9	C7 14BK/TN	BLOWER MOTOR HIGH DRIVER
10	-	-

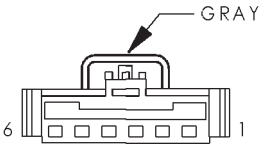

BRAKE LAMP SWITCH

BRAKE LAMP SWITCH - GRAY 6 WAY

CAV	CIRCUIT	FUNCTION
1	F32 18PK/DB	FUSED B(+)
2	L50 18WT/TN	BRAKE LAMP SWITCH OUTPUT
3	V40 20DB/RD	SPEED CONTROL BRAKE LAMP SWITCH OUTPUT
4	V32 20YL/RD	SPEED CONTROL SUPPLY
5	Z1 20BK	GROUND
6	K29 20WT/PK	BRAKE LAMP SWITCH SENSE

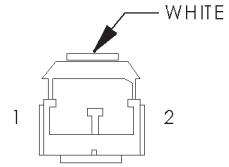

BRAKE TRANSMISSION SHIFT INTERLOCK SOLENOID

BRAKE TRANSMISSION SHIFT INTERLOCK SOLENOID - WHITE 2 WAY

CAV	CIRCUIT	FUNCTION
1	K29 20WT/PK	BRAKE LAMP SWITCH SENSE
2	F18 20LG/BK	FUSED IGNITION SWITCH OUTPUT (RUN-START)

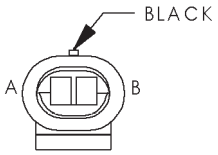

BRAKE WARNING INDICATOR SWITCH

BRAKE WARNING INDICATOR SWITCH - BLACK 2 WAY

CAV	CIRCUIT	FUNCTION
A	G9 20GY/BK	RED BRAKE WARNING INDICATOR DRIVER
B	Z1 20BK	GROUND

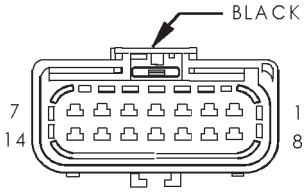

C101

C101 - BLACK (HEADLAMP AND DASH SIDE)

CAV	CIRCUIT
1	Z1 20BK
2	K39 20GY/RD
3	K40 20BR/WT
4	K59 20VT/BK
5	F12 20DB/WT
6	A142 18DG/OR
7	K60 20YL/BK
8	K21 20BK/RD
9	K6 20VT/WT
10	K4 20BK/LB
11	G7 20WT/OR (M/T)
12	K141 20TN/WT
13	K119 20LG/BK (M/T)
14	T19 18WT (A/T)

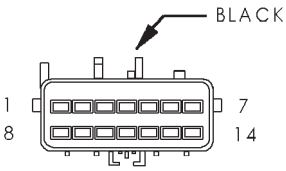

C101

C101 - BLACK (ENGINE SIDE)

CAV	CIRCUIT
1	Z1 20BK
2	K39 20GY/RD (EARLY BUILD)
2	K39 18GY/RD (NORMAL BUILD)
3	K40 20BR/WT (EARLY BUILD)
3	K40 18BR/WT (NORMAL BUILD)
4	K59 20VT/BK (EARLY BUILD)
4	K59 18VT/BK (NORMAL BUILD)
5	F12 20DB/WT
6	A142 18DG/OR
7	K60 20YL/BK (EARLY BUILD)

C101 - BLACK (ENGINE SIDE)

CAV	CIRCUIT
7	K60 18YL/BK (NORMAL BUILD)
8	K21 20BK/RD (EARLY BUILD)
8	K21 18BK/RD (NORMAL BUILD)
9	K6 20VT/WT
10	K4 20BK/LB
11	G7 20WT/OR (M/T)
12	K141 20TN/WT
13	K119 20LG/BK (M/T)
14	T19 18WT (A/T)

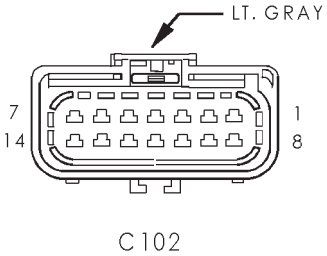

C102 - LT. GRAY (HEADLAMP AND DASH SIDE)

CAV	CIRCUIT
1	C3 20DB/BK
2	K90 20TN
3	K24 20GY/BK (A/T)
4	K22 20OR/DB (A/T)
5	T40 14BR
6	K7 20OR
7	C22 20DB/WT
8	V32 20YL/RD
9	-
10	Z12 18BK/TN
11	-
12	T41 20BK/WT (A/T EARLY BUILD)
12	T41 20BK/WT (RHD A/T NORMAL BUILD)
12	T41 20YL/RD (LHD A/T NORMAL BUILD)
13	L1 18VT/BK
14	F20 18WT

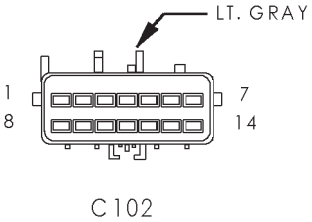

C102 - LT. GRAY (ENGINE SIDE)

CAV	CIRCUIT
1	C3 20DB/BK
2	K90 20TN
3	K24 20GY/BK (A/T)
4	K22 20OR/DB (A/T)
5	T40 14BR
6	K7 20OR
7	C22 20DB/WT
8	V32 20YL/RD
9	-
10	Z12 18BK/TN
11	-
12	T41 20BK/WT (A/T)
13	L1 18VT/BK
14	F20 18WT

C103

C103 - (INJECTOR HARNESS SIDE)

CAV	CIRCUIT
1	K4 20BK/LB
2	K2 20TN/BK
3	K11 18WT/DB
4	K12 18TN
5	K13 18YL/WT
6	K14 18LB/BR
7	A142 18DG/OR
8	-

C103

C103 - (ENGINE SIDE)

CAV	CIRCUIT
1	K4 20BK/LB
2	K2 20TN/BK
3	K11 18WT/DB
4	K12 18TN
5	K13 18YL/WT
6	K14 18LB/BR
7	A142 18DG/OR
8	-

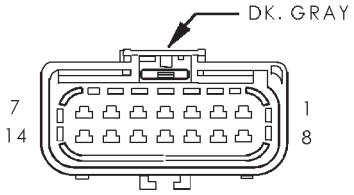

C104
(A/T)

C104 (A/T) - DK. GRAY (HEADLAMP AND DASH SIDE)

CAV	CIRCUIT
1	T13 20DB/BK
2	T52 20RD/BK
3	T47 18YL/BK
4	T1 20LG/BK
5	T3 20VT
6	T42 20VT/WT
7	T50 18DG
8	T54 18VT/PK (RHD)
8	T54 20VT/PK (LHD)
9	T14 20LG/WT
10	T9 18OR/BK
11	T16 16RD
12	T59 18PK
13	T60 18BR
14	T20 18LB

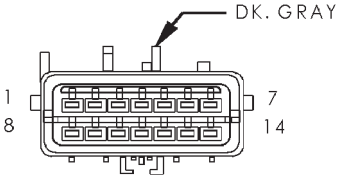

C104
(A/T)

C104 (A/T) - DK. GRAY (ENGINE SIDE)

CAV	CIRCUIT
1	T13 20DB/BK
2	T52 20RD/BK
3	T47 18YL/BK
4	T1 20LG/BK
5	T3 20VT
6	T42 20VT/WT
7	T50 18DG
8	T54 18VT/PK
9	T14 20LG/WT
10	T9 18OR/BK
11	T16 16RD
12	T59 18PK
13	T60 18BR
14	T20 18LB

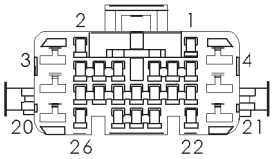

C105

C105 - (HEADLAMP AND DASH SIDE)

CAV	CIRCUIT
1	B27 18RD/YL (TRACTION CONTROL)
2	L1 18VT/BK
3	A1 14RD
4	C7 14BK/TN
5	M1 20PK
6	A15 18PK/DG
7	X5 20LB/RD (SIREN)
8	L44 16VT/RD
9	K29 20WT/PK
10	L43 18VT (LHD)
10	L43 14YL (RHD)
11	A41 14YL
12	L3 16RD/OR
13	C6 18LB
14	F13 16DB (EARLY BUILD)
14	F88 16RD/WT (NORMAL BUILD)
15	V5 18DG
16	G31 20VT/LG (POWER SUNROOF)
17	G32 20BK/LB (POWER SUNROOF)
18	-
19	C4 18TN/BK
20	-
21	-
22	V3 16BR/WT
23	V4 16RD/YL
24	L60 18TN
25	L61 18LG
26	G70 20BR/TN (RKE)

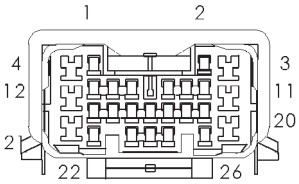

C105

C105 - (INSTRUMENT PANEL SIDE)

CAV	CIRCUIT
1	B27 18RD/YL (TRACTION CONTROL)
2	L1 18VT/BK
3	A1 14RD
4	C7 14BK/TN
5	M1 20PK
6	A15 18PK/DG (EARLY BUILD)
6	A15 18PK/DG (LHD NORMAL BUILD)
6	A15 18PK/DB (RHD NORMAL BUILD)
7	X5 20LB/RD (SIREN)
8	L44 16VT/RD
9	K29 20WT/PK
10	L43 16VT
11	A41 14YL
12	L3 16RD/OR
13	C6 18LB
14	F88 16DB (NORMAL BUILD)
14	F13 16DB (EARLY BUILD)
15	V5 18DG
16	G31 20VT/LG (POWER SUNROOF)
17	G32 20BK/LB (POWER SUNROOF EARLY BUILD)
17	G32 20BK/LG (POWER SUNROOF NORMAL BUILD)
18	-
19	C4 18TN/BK
20	-
21	-
22	V3 16BR/WT
23	V4 16RD/YL
24	L60 18TN
25	L61 18LG
26	G70 20BR/TN (RKE)

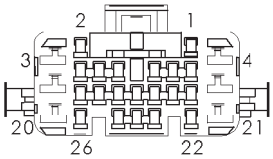

C106

C106 - (HEADLAMP AND DASH SIDE)

CAV	CIRCUIT
1	L39 18LB (FOG LAMPS)
2	V20 18BK/WT
3	A120 16RD/LB (RHD POWER SEAT NORMAL BUILD)
3	A120 16RD/LG (LHD POWER SEAT NORMAL BUILD)
3	A120 16RD/LB (POWER SEAT EARLY BUILD)
4	A3 12RD/WT
5	L160 18TN/RD
6	C21 20DB/OR
7	L161 18LG/OR
8	X3 20BK/RD
9	G4 20DB
10	F18 20LG/BK
11	F1 16DB/BK

C106 - (HEADLAMP AND DASH SIDE)

CAV	CIRCUIT
12	A35 12DB (POWER MIRRORS NORMAL BUILD)
13	L50 18WT/TN
14	D25 20VT/YL
15	V37 20RD/LG
16	L13 20BR/YL (LAVALIER MODULE)
17	-
18	F20 18WT
19	-
20	A4 12BK/PK
21	A2 12PK/BK
22	F12 20DB/WT
23	C5 18LG
24	F39 18PK/LG (FOG LAMPS)
25	V10 18BR
26	L7 18BK/YL

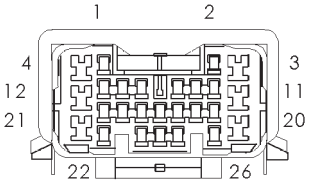

C106

C106 - (INSTRUMENT PANEL SIDE)

CAV	CIRCUIT
1	L39 18LB (FOG LAMPS)
2	V20 18BK/WT
3	A120 16RD/LG (POWER SEAT)
4	A3 12RD/WT
5	L160 18TN/RD
6	C21 20DB/OR
7	L161 18LG/OR
8	X3 20BK/RD
9	G4 20DB
10	F18 20LG/BK
11	F1 16DB/BK
12	A35 12DB (POWER MIRRORS NORMAL BUILD)
13	L50 18WT/TN
14	D25 20VT/YL
15	V37 20RD/LG
16	L13 20BR/YL (LAVALIER MODULE)
17	-
18	F20 18WT
19	-
20	A4 12BK/PK
21	A2 12PK/BK
22	F12 20DB/WT
23	C5 18LG
24	F39 18PK/LG (FOG LAMPS)
25	V10 18BR
26	L7 18BK/YL

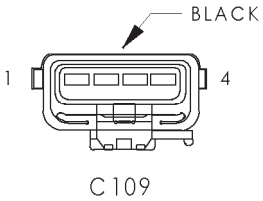

C109 - BLACK (UNDERBODY SIDE)

CAV	CIRCUIT
1	B1 20YL/DB
2	B2 20YL
3	B3 20LG/DB
4	B4 20LG

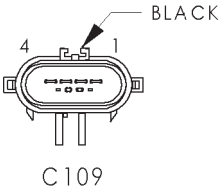

C109 - BLACK (HEADLAMP AND DASH SIDE)

CAV	CIRCUIT
1	B1 18YL/DB
2	B2 18YL
3	B3 18LG/DB
4	B4 18LG

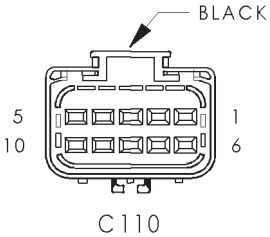

C110 - BLACK (UNDERBODY SIDE)

CAV	CIRCUIT
1	G4 20DB
2	Z2 20BK/LG
3	A141 16DG/WT
4	Z1 16BK
5	K106 20WT/DG (LEAK DETECTION PUMP)
6	K107 20OR/YL (LEAK DETECTION PUMP)
7	F18 20LG/BK (LEAK DETECTION PUMP)
8	-
9	-
10	-

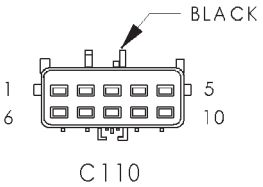

C110 - BLACK (HEADLAMP AND DASH SIDE)

CAV	CIRCUIT
1	G4 20DB
2	Z2 20BK (OTHER EARLY BUILD)
2	Z2 20BK/LG (LHD 2.0L EATX BUILT-UP-EXPORT ABS EARLY BUILD)
2	Z2 20BK (RHD NORMAL BUILD)
2	Z2 20BK/LG (LHD NORMAL BUILD)
3	A141 16DG/WT
4	Z1 16BK
5	K106 20WT/DG
6	K107 20YL/BK (RHD EARLY BUILD)
6	K107 20OR/YL (LHD EARLY BUILD)
6	K107 20YL/BK (NORMAL BUILD)
7	F18 20LG/BK
8	-
9	-
10	-

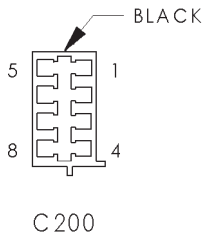

C200 - BLACK (INSTRUMENT PANEL SIDE)

CAV	CIRCUIT
1	E2 20PK (PREMIUM)
2	F10 18YL/RD (PREMIUM)
3	G31 20VT/LG (PREMIUM)
4	G32 20BK/LB (PREMIUM EARLY BUILD)
4	G32 20BK/LG (PREMIUM NORMAL BUILD)
5	-
6	-
7	X53 18DG (EARLY BUILD)
7	X53 18DG/VT (NORMAL BUILD)
8	X55 18RD/BR (EARLY BUILD)
8	X55 18BR/DB (NORMAL BUILD)

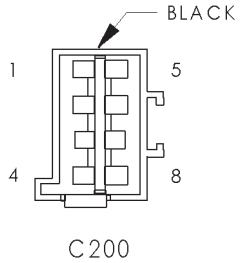

C200 - BLACK (LT/RT HEADLINER JUMPER SIDE)

CAV	CIRCUIT
1	E2 20PK
2	F10 18YL
3	G31 18BK
4	G32 20BK/LG
5	G120 20WT/LB
6	-
7	X53 18VT/DG
8	X55 18DB/RD

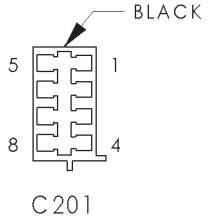

C201 - BLACK (INSTRUMENT PANEL SIDE)

CAV	CIRCUIT
1	M1 20PK
2	M2 20YL
3	Z1 18BK (PREMIUM)
4	Z2 20BK/LG
5	G120 20WT/LB (PREMIUM)
6	-
7	X54 18VT/DG (EARLY BUILD)
7	X54 18VT (NORMAL BUILD)
8	X56 18DB/BR (EARLY BUILD)
8	X56 18DB/RD (NORMAL BUILD)

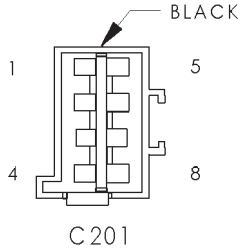

C201 - BLACK (LT/RT HEADLINER JUMPER SIDE)

CAV	CIRCUIT
1	M1 20PK
2	M2 18YL
3	Z1 18BK
4	Z2 20BK/LG
5	G120 20WT/LB
6	-
7	X54 18VT/DG
8	X56 18DB/RD

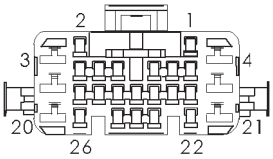

C202

C202 - (INSTRUMENT PANEL SIDE)

CAV	CIRCUIT
1	G10 20LG/RD (NORMAL BUILD)
1	G10 20LG/RD (RHD EARLY BUILD)
1	G10 20LG/RD (EARLY BUILD)
2	M9 20DB/OR
3	C15 12BK/WT
4	-
5	L50 18WT/TN
6	X51 18BR/YL
7	X57 18BR/LB
8	P35 18OR/VT (RHD POWER LOCKS)
8	P35 18OR/BK (LHD POWER LOCKS)
9	P36 18PK/BK (LHD POWER LOCKS)
9	P36 18PK/VT (RHD POWER LOCKS)
10	L38 18BR/WT (REAR FOG LAMPS)
11	Q23 14RD/WT
12	Q13 14DB/WT (EARLY BUILD)
12	Q13 14DB/GY (NORMAL BUILD)
13	L63 18DG/RD
14	V13 18BR/LG
15	P97 20WT/DG (RHD POWER LOCKS)
15	P96 20DG (LHD POWER LOCKS)
16	L1 18VT/BK
17	G78 20TN/BK
18	G75 20TN (LHD EARLY BUILD)
18	M9 20DB/OR (RHD EARLY BUILD)
19	F13 18DB (EARLY BUILD)
19	V23 18DB (NORMAL BUILD)
20	-
21	-
22	L7 18BK/YL
23	D25 20VT/YL (EXCEPT BASE)
24	R53 18LG/YL
25	F15 18DG/WT (EXCEPT BASE)
26	R55 18LG/DG

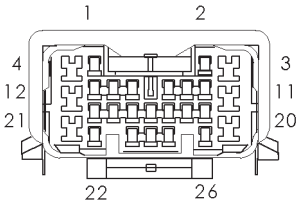

C202

C202 - (LEFT BODY SIDE)

CAV	CIRCUIT
1	G10 20LG/RD
2	G77 20TN/OR (EARLY BUILD)
2	G77 20DB/OR (NORMAL BUILD)
3	C15 12BK/WT (NORMAL BUILD)
4	Q1 14YL (NORMAL BUILD)
5	L50 18WT/TN
6	X51 18BR/YL
7	X57 18BR/LB
8	P35 18OR/VT (POWER LOCKS)
9	P36 18PK/VT (POWER LOCKS)
10	L38 18BR/WT (EXCEPT BASE)
11	Q23 14RD/WT (EARLY BUILD)

C202 - (LEFT BODY SIDE)

CAV	CIRCUIT
11	Q23 14RD/DG (NORMAL BUILD)
12	Q13 14DB/WT (EARLY BUILD)
12	Q13 14DB/GY (NORMAL BUILD)
13	L63 18DG/RD
14	V13 18BR/LG
15	P96 20WT/LG (POWER LOCKS)
16	L1 18VT/BK
17	G78 20TN/BK
18	G75 20TN (EARLY BUILD)
19	F13 18DB (EARLY BUILD)
19	V23 18BR/BK (NORMAL BUILD)
20	-
21	-
22	L7 18BK/YL
23	D25 20VT/VL (EXCEPT BASE)
24	R53 18LG/YL
25	F15 20DG/WT (EXCEPT BASE)
26	R55 18LG/DG

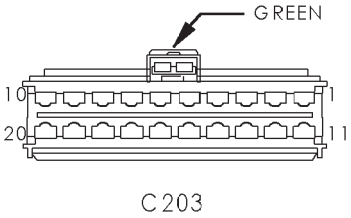

C203 - GREEN (INSTRUMENT PANEL SIDE)

CAV	CIRCUIT
1	G74 20TN/RD (RHD EARLY BUILD)
1	G74 20TN/RD (RHD EARLY BUILD SECURITY ALARM)
1	M9 20DB/OR (LHD EARLY BUILD)
2	M9 20DB/OR
3	L50 18WT/TN
4	X52 18DB/WT
5	X58 18DB/BK
6	P35 18OR/BK (LHD POWER LOCKS)
6	P35 18OR/BK (LHD POWER LOCKS)
6	P35 18OR/BK (RHD POWER LOCKS)
6	P35 18OR/VT (RHD POWER LOCKS)
7	P36 18PK/BK (LHD POWER LOCKS)
7	P36 18PK/VT (RHD POWER LOCKS)
8	Q14 14GY
9	Q24 14DG
10	L7 18BK/YL
11	L62 18BR/RD
12	F30 16RD (EXCEPT BASE)
13	M1 20PK
14	M2 20YL
15	G10 20LG/RD (RHD)
16	D25 20VT/YL (EXCEPT BASE)
17	R54 18LB/YL
18	F15 18DG/WT (EXCEPT BASE)
19	R56 18LB/DG
20	-

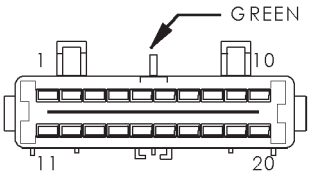

C203

C203 - GREEN (RIGHT BODY SIDE)

CAV	CIRCUIT
1	G74 20TN/RD
2	G76 20TN/YL (EARLY BUILD)
2	G76 20DB/OR (NORMAL BUILD)
3	L50 18WT/TN
4	X52 18DB/WT
5	X58 18DB/BK
6	P35 18OR/VT (POWER LOCKS)
7	P36 18PK/VT (POWER LOCKS)
8	Q14 14GY
9	Q24 14DG
10	L7 18BK/YL
11	L62 18BR/RD
12	F30 16RD (EXCEPT BASE)
13	M1 20PK
14	M2 20YL
15	G10 20LG/RD (RHD)
16	D25 20VT/YL (EXCEPT BASE)
17	R54 18LB/YL
18	F15 20DG/WT (EXCEPT BASE)
19	R56 18LB/DG
20	-

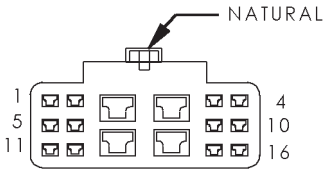

C204

C204 - NATURAL (FRONT DOOR SIDE)

CAV	CIRCUIT
1	C16 20LB/YL (POWER MIRRORS)
2	Q11 14LB
3	G75 18TN/DB (NORMAL BUILD BASE)
3	G74 18TN/DB (NORMAL BUILD RHD PREMIUM)
3	G75 18TN/DB (NORMAL BUILD LHD PREMIUM)
4	P75 20DB/WT (POWER MIRRORS)
5	L7 18BK/YL (POWER LOCKS)
6	P159 20DG/WT (POWER FOLDING MIRROR)
7	X53 18DG (EARLY BUILD)
7	X53 18DG/VT (NORMAL BUILD)
8	P73 20YL/PK (LHD POWER MIRRORS)
8	P76 20YL/PK (RHD POWER MIRRORS)
9	Z1 18BK (BASE NORMAL BUILD)
9	Z1 20BK (POWER LOCKS)
10	Q21 14WT
11	P160 20LB/BK (POWER FOLDING MIRROR)
12	P36 18PK/BK (RHD POWER LOCKS)
12	P34 18PK/BK (LHD POWER LOCKS)
13	P96 20WT/DG (RHD POWER LOCKS)
13	P97 20WT/DG (LHD POWER LOCKS)
14	X55 18BR/DB (NORMAL BUILD)
14	X55 18BR/RD (EARLY BUILD)
15	P33 18OR/BK (LHD POWER LOCKS)
15	P35 18OR/BK (RHD POWER LOCKS)
16	P71 20YL/BK (POWER MIRRORS EARLY BUILD)
16	P71 20BR/YL (POWER MIRRORS NORMAL BUILD)

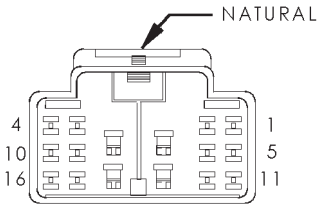

C204

C204 - NATURAL (INSTRUMENT PANEL SIDE)

CAV	CIRCUIT
1	C16 20LB/YL (POWER MIRRORS)
2	Q11 14LB
3	G75 20TN (LHD NORMAL BUILD)
3	M9 20DB/OR (RHD NORMAL BUILD)
4	P75 20DB/WT (POWER MIRRORS)
5	L7 18BK/YL (POWER LOCKS)
6	P159 20DG/WT (POWER FOLDING MIRROR)
7	X53 18DG (EARLY BUILD)
7	X53 18DG (EARLY BUILD)
7	X53 18DG/VT (NORMAL BUILD)
7	X53 18DG/VT (NORMAL BUILD)
8	P73 20YL/PK (LHD POWER MIRRORS)
8	P76 20YL/PK (RHD POWER MIRRORS)
9	Z1 20BK
10	Q21 14WT
11	P160 20LB/BK (POWER FOLDING MIRROR)
12	P36 18PK/BK (RHD POWER LOCKS)
12	P34 18PK/BK (LHD POWER LOCKS)
13	P96 20WT/DG (RHD POWER LOCKS NORMAL BUILD)
13	P97 20WT/DG (LHD POWER LOCKS EARLY BUILD)
13	P96 20WT/DG (RHD POWER LOCKS NORMAL BUILD)
14	X55 18RD/BR (EARLY BUILD)
14	X55 18BR/DB (NORMAL BUILD)
14	X55 18BR/DB (NORMAL BUILD)
14	X55 18RD/BR (EARLY BUILD)
15	P33 18OR/BK (LHD POWER LOCKS)
15	P35 18OR/BK (RHD POWER LOCKS)
16	P71 20YL/BK (POWER MIRRORS)

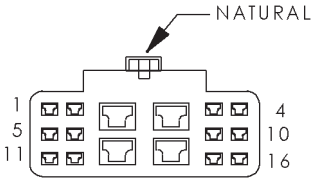

C205

C205 - NATURAL (FRONT DOOR SIDE)

CAV	CIRCUIT
1	C16 20LB/YL (POWER MIRRORS)
2	Q12 14LB
3	G75 18TN/DB (NORMAL BUILD RHD PREMIUM)
3	G74 18TN/DB (NORMAL BUILD LHD PREMIUM)
3	G74 18TN/DB (NORMAL BUILD BASE)
4	P74 20DB/WT (POWER MIRRORS)
5	L7 18BK/YL (POWER LOCKS)
6	P159 20DG/WT (POWER FOLDING MIRROR)
7	X54 18DG (EARLY BUILD)
7	X54 18DG/VT (NORMAL BUILD)
8	P70 20YL/PK (LHD POWER MIRRORS)
8	P76 20YL/PK (RHD POWER MIRRORS)
9	Z1 20BK (POWER LOCKS)
9	Z1 18BK (BASE NORMAL BUILD)
10	Q22 14WT
11	P160 20LB/BK (POWER FOLDING MIRROR)
12	P36 18PK/BK (LHD POWER MIRRORS)
12	P34 18PK/BK (RHD POWER MIRRORS)
13	P96 20WT/DG (LHD POWER LOCKS)
13	P97 20WT/DG (RHD POWER LOCKS)
14	X56 18DB/RD (NORMAL BUILD)
14	X56 18BR/RD (EARLY BUILD)
15	P33 18OR/BK (RHD POWER LOCKS)
15	P35 18OR/BK (LHD POWER LOCKS)
16	P72 20BR/YL (POWER MIRRORS NORMAL BUILD)
16	P72 20YL/BK (POWER MIRRORS EARLY BUILD)

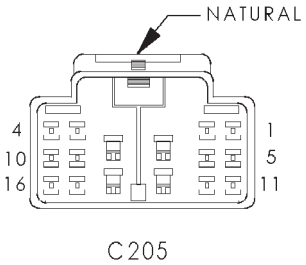

C205 - NATURAL (INSTRUMENT PANEL SIDE)

CAV	CIRCUIT
1	C16 20LB/YL (POWER MIRRORS)
2	Q12 12 BR/LB
3	M9 20DB/OR (LHD NORMAL BUILD)
3	G74 20TN/RD (RHD NORMAL BUILD)
4	P74 20DB/WT (POWER MIRRORS)
5	L7 18BK/YL (POWER LOCKS)
6	P159 20DG/WT (POWER FOLDING MIRROR)
7	X54 18VT/DG (EARLY BUILD)
7	X54 18VT/DG (EARLY BUILD)
7	X54 18VT (NORMAL BUILD)
7	X54 18VT (NORMAL BUILD)
8	P70 20PK (LHD POWER MIRRORS)
8	P76 20YL/PK (RHD POWER MIRRORS)
8	P76 20YL/PK (RHD POWER MIRRORS)
9	Z1 20BK
10	Q22 14VT/WT
11	P160 20LB/BK (POWER FOLDING MIRROR)
12	P36 18PK/BK (LHD POWER MIRRORS)
12	P34 18PK/BK (RHD POWER MIRRORS)
13	P96 20DG (LHD POWER LOCKS)
13	P96 20DG (LHD POWER LOCKS)
13	P97 20WT/DG (RHD POWER LOCKS)
14	X56 18DB/BR (EARLY BUILD)
14	X56 18DB/RD (NORMAL BUILD)
14	X56 18DB/RD (NORMAL BUILD)
14	X56 18DB/BR (EARLY BUILD)
15	P33 18OR/BK (RHD POWER LOCKS)
15	P35 18OR/BK (LHD POWER LOCKS)
16	P72 20YL (POWER MIRRORS)

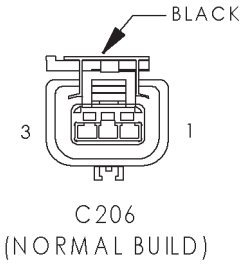

C206 (NORMAL BUILD) - BLACK (INSTRUMENT PANEL SIDE)

CAV	CIRCUIT
1	A120 16RD/LG
2	Z121 16BK
3	F99 18RD/WT (HEATED SEATS)

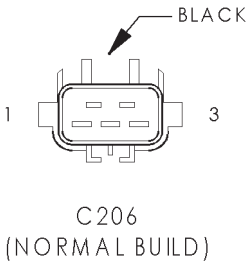

C206 (NORMAL BUILD) - BLACK (POWER HEIGHT ADJUSTER SIDE)

CAV	CIRCUIT
1	A120 16RD/LG
2	Z121 18BK (HEATED SEATS)
2	Z1 16BK (EXCEPT HEATED SEATS)
3	F99 18RD/WT (HEATED SEATS)

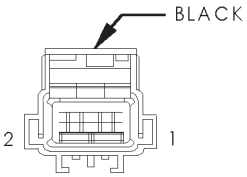

C206
(EARLY BUILD)

C206 (EARLY BUILD) - BLACK (INSTRUMENT PANEL SIDE)

CAV	CIRCUIT
1	A120 16RD/LG
2	Z1 16BK

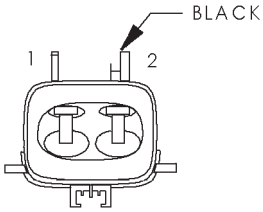

C206
(EARLY BUILD)

C206 (EARLY BUILD) - BLACK (POWER HEIGHT ADJUSTER SIDE)

CAV	CIRCUIT
1	A120 16RD/LG
2	Z1 16BK

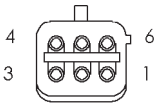

C207

C207 - (DOME LAMP SIDE)

CAV	CIRCUIT
1	M1 20PK
2	M2 20YL
3	Z1 18BK (POWER SUNROOF)
3	Z1 20BK (EXCEPT POWER SUNROOF)
4	Z2 20BK/LG (OVERHEAD CONSOLE)
5	G120 20WT/LB (ALARM)
6	-

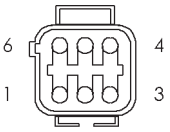

C207

C207 - (LT/RT HEADLINER JUMPER SIDE)

CAV	CIRCUIT
1	M1 20PK
2	M2 18YL
3	Z1 18BK
4	Z2 20BK/LG
5	G120 20WT/LB
6	-

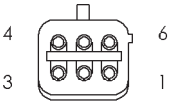

C208

C208 - (DOME LAMP SIDE)

CAV	CIRCUIT
1	E2 20OR
2	F10 18YL/RD
3	G31 20VT/LG
4	G32 20BK/LB
5	-
6	-

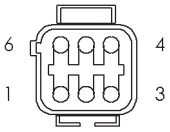

C208

C208 - (LT/RT HEADLINER JUMPER SIDE)

CAV	CIRCUIT
1	E2 20PK
2	F10 18YL
3	G31 18BK
4	G32 20BK/LG
5	-
6	-

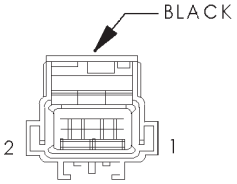

C209

C209 - BLACK (INSTRUMENT PANEL SIDE)

CAV	CIRCUIT
1	C1 14DG
2	C7 14BK/TN

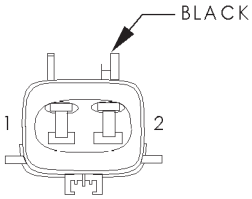

C209

C209 - BLACK (LHD HEATER JUMPER SIDE)

CAV	CIRCUIT
1	C1 14DG
2	C7 14BK/TN

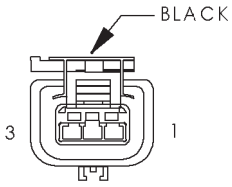

C210
(HEATED SEATS)
(NORMAL BUILD)

C210 (HEATED SEATS) (NORMAL BUILD) -
BLACK (INSTRUMENT PANEL SIDE)

CAV	CIRCUIT
1	-
2	Z122 16BK
3	F98 18RD/WT

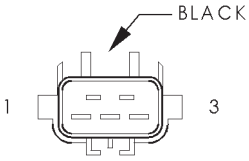

C210
(HEATED SEATS)
(NORMAL BUILD)

C210 (HEATED SEATS) (NORMAL BUILD) -
BLACK (HEATED SEAT SIDE)

CAV	CIRCUIT
1	-
2	Z122 18BK
3	F98 18RD/WT

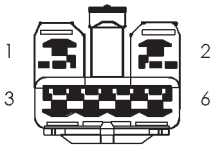

C211

C211 - (DOME LAMP SIDE)

CAV	CIRCUIT
1	Q43 20VT
2	Q44 20BR
3	Q42 20LB
4	Q41 20WT
5	Z1 18BK
6	F10 18YL/RD

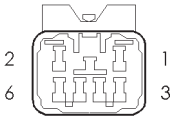

C211

C211 - (POWER SUNROOF SIDE)

CAV	CIRCUIT
1	L1 20VT
2	L2 20BR
3	L3 20LB
4	L4 20WT
5	Z1 14BK/VT
6	L5 14YL/RD

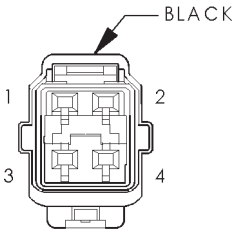

C300

C300 - BLACK (LEFT BODY SIDE)

CAV	CIRCUIT
1	P35 18OR/VT (POWER LOCKS)
2	P36 18PK/VT (POWER LOCKS)
3	Q13 14DB/GY (NORMAL BUILD)
3	Q13 14DB/WT (EARLY BUILD)
4	Q23 14RD/DG (NORMAL BUILD)
4	Q23 14RD/WT (EARLY BUILD)

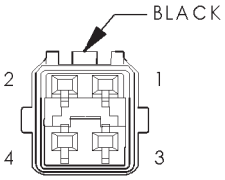

C300

C300 - BLACK (REAR DOOR SIDE)

CAV	CIRCUIT
1	P35 18OR/VT (POWER LOCKS)
2	P36 18PK/VT (POWER LOCKS)
3	Q13 14DB/GY
4	Q23 14RD/DG (NORMAL BUILD)
4	Q23 14RD/WT (EARLY BUILD)

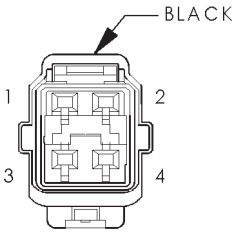

C301

C301 - BLACK (RIGHT BODY SIDE)

CAV	CIRCUIT
1	P35 18OR/VT (POWER LOCKS)
2	P36 18PK/VT (POWER LOCKS)
3	Q14 14GY
4	Q24 14DG

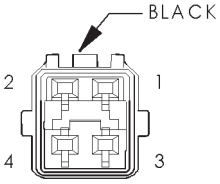

C301

C301 - BLACK (REAR DOOR SIDE)

CAV	CIRCUIT
1	P35 18OR/VT (POWER LOCKS)
2	P36 18PK/VT (POWER LOCKS)
3	Q14 14DB/GY
4	Q24 14RD/WT (EARLY BUILD)
4	Q24 14RD/DG (NORMAL BUILD)

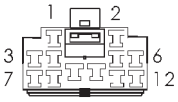

C302

C302 - (LIFTGATE SIDE)

CAV	CIRCUIT
1	P35 18OR/VT (POWER LOCKS)
2	P36 18PK/VT (POWER LOCKS)
3	G78 20TN/BK
4	V13 18BR/LG
5	F13 18DB (EARLY BUILD)
5	V23 18BR/PK (NORMAL BUILD)
6	P96 20WT/LG
7	L50 18WT/TN
8	-
9	C15 12BK/WT
10	Z1 12BK
11	Z1 16BK
12	-

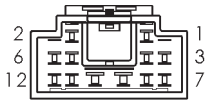

C302

C302 - (LEFT BODY SIDE)

CAV	CIRCUIT
1	P35 18OR/VT (POWER LOCKS)
2	P36 18PK/VT (POWER LOCKS)
3	G78 20TN/BK
4	V13 18BR/LG
5	F13 18DB (EARLY BUILD)
5	V23 18BR/PK (NORMAL BUILD)
6	P96 20WT/LG
7	L50 18WT/TN
8	-
9	C15 12BK/WT
10	Z1 12BK
11	Z1 16BK
12	-

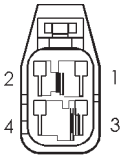

C303

C303 - (LEFT BODY SIDE)

CAV	CIRCUIT
1	L1 18VT/BK
2	L38 18BR/WT (REAR FOG LAMPS)
3	L7 18BK/YL
4	Z1 18BK

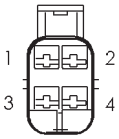

C303

C303 - (REAR FASCIA SIDE)

CAV	CIRCUIT
1	L1 18VT/BK
2	L38 18BR/WT (REAR FOG LAMPS)
3	L7 18BK/YL
4	Z1 18BK

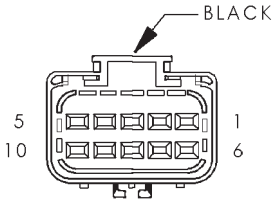

C304

C304 - BLACK (FUEL TANK SIDE)

CAV	CIRCUIT
1	Z1 16BK
2	Z2 20BK/LG
3	G4 20DB
4	A141 16DG/WT
5	F18 20LG/BK (LEAK DETECTION PUMP)
6	K106 20WT/DG (LEAK DETECTION PUMP)
7	K107 20OR/YL (LEAK DETECTION PUMP)
8	-
9	-
10	-

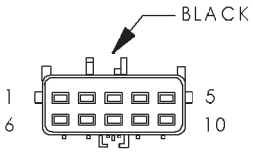

C304

C304 - BLACK (UNDERBODY SIDE)

CAV	CIRCUIT
1	Z1 16BK
2	Z2 20BK/LG
3	G4 20DB
4	A141 16DG/WT
5	F18 20LG/BK (LEAK DETECTION PUMP)
6	K106 20WT/DG (LEAK DETECTION PUMP)
7	K107 20OR/YL (LEAK DETECTION PUMP)
8	-
9	-
10	-

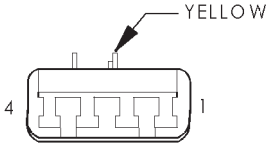

C305
(EARLY BUILD)

C305 (EARLY BUILD) - YELLOW (LEFT BODY SIDE)

CAV	CIRCUIT
1	-
2	-
3	R31 20LG/OR
4	R33 20LG/WT

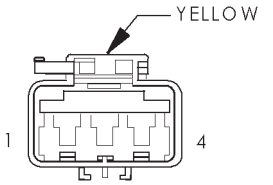

C305
(EARLY BUILD)

C305 (EARLY BUILD) - YELLOW (SIDE AIR BAG SIDE)

CAV	CIRCUIT
1	-
2	-
3	R31 18OR
4	R33 18WT

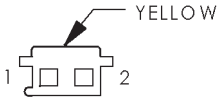

C305
(NORMAL BUILD)

C305 (NORMAL BUILD) - YELLOW (LEFT BODY SIDE)

CAV	CIRCUIT
1	R31 20LG/OR
2	R33 20LG/WT

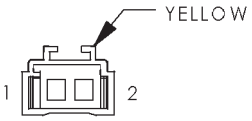

C305
(NORMAL BUILD)

C305 (NORMAL BUILD) - YELLOW (SIDE AIR BAG SIDE)

CAV	CIRCUIT
1	R31 18OR
2	R33 18WT

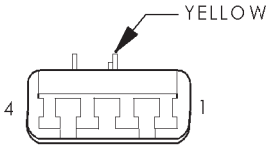

C306
(EARLY BUILD)

C306 (EARLY BUILD) - YELLOW (RIGHT BODY SIDE)

CAV	CIRCUIT
1	-
2	-
3	R32 20LB/OR
4	R34 20LB/WT

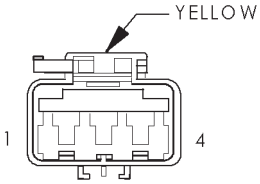

C306
(EARLY BUILD)

C306 (EARLY BUILD) - YELLOW (SIDE AIR BAG SIDE)

CAV	CIRCUIT
1	-
2	-
3	R32 18OR
4	R34 18WT

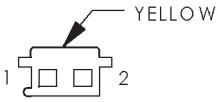

C306
(NORMAL BUILD)

C306 (NORMAL BUILD) - YELLOW (RIGHT BODY SIDE)

CAV	CIRCUIT
1	R32 20LB/OR
2	R34 20LB/WT

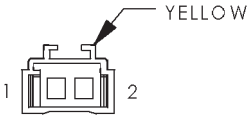

C306
(NORMAL BUILD)

C306 (NORMAL BUILD) - YELLOW (SIDE AIR BAG SIDE)

CAV	CIRCUIT
1	R32 18OR
2	R34 18WT

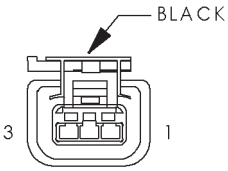

CAMSHAFT
POSITION
SENSOR

CAMSHAFT POSITION SENSOR - BLACK 3 WAY

CAV	CIRCUIT	FUNCTION
1	K7 20OR	8V SUPPLY
2	K4 20BK/LB	SENSOR GROUND
3	K44 20TN/YL	CAMSHAFT POSITION SENSOR SIGNAL

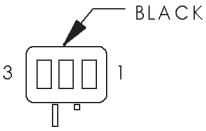

CARGO
LAMP

CARGO LAMP - BLACK 3 WAY

CAV	CIRCUIT	FUNCTION
1	M1 20PK	FUSED B(+)
2	M2 20YL	COURTESY LAMPS DRIVER
3	-	-

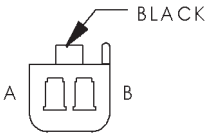

CENTER HIGH MOUNTED STOP LAMP

CENTER HIGH MOUNTED STOP LAMP - BLACK 2 WAY

CAV	CIRCUIT	FUNCTION
A	L50 18WT/TN	BRAKE LAMP SWITCH OUTPUT
B	Z1 18BK	GROUND

CENTER STACK LAMP

CENTER STACK LAMP - 2 WAY

CAV	CIRCUIT	FUNCTION
1	E2 20OR	PANEL LAMPS DRIVER
2	Z1 20BK	GROUND

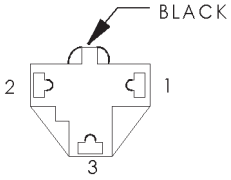

CIGAR LIGHTER

CIGAR LIGHTER - BLACK 3 WAY

CAV	CIRCUIT	FUNCTION
1	F30 16RD	FUSED IGNITION SWITCH OUTPUT (RUN-ACC)
2	-	-
3	Z1 16BK	GROUND

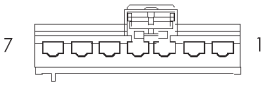

CLOCKSPRING

CLOCKSPRING - 7 WAY

CAV	CIRCUIT	FUNCTION
1	R43 18BK/LB	DRIVER SQIB NO. 1 LINE 1
2	R45 18DG/LB	DRIVER SQIB NO. 1 LINE 2
3	-	-
4	-	-
5	X3 20BK/RD	HORN RELAY CONTROL
6	V37 20RD/LG	SPEED CONTROL SWITCH SIGNAL
7	Z2 20BK/LG	GROUND

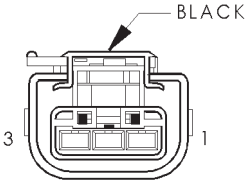

CLUTCH PEDAL POSITION SWITCH (UP) (M/T)

CLUTCH PEDAL POSITION SWITCH (UP) (M/T) - BLACK 3 WAY

CAV	CIRCUIT	FUNCTION
1	K119 20LG/BK	CLUTCH UPSTOP SWITCH SIGNAL
2	Z12 20BK/TN	GROUND
3	T41 20BK/WT (EARLY BUILD)	CLUTCH INTERLOCK SWITCH SIGNAL
3	T41 20BK/WT (RHD NORMAL BUILD)	CLUTCH INTERLOCK SWITCH SIGNAL
3	T41 20YL/RD (LHD NORMAL BUILD)	CLUTCH INTERLOCK SWITCH SIGNAL

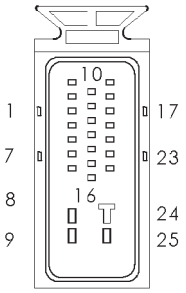

CONTROLLER ANTILOCK BRAKE

CONTROLLER ANTILOCK BRAKE - 25 WAY

CAV	CIRCUIT	FUNCTION
1	B8 18RD/DB	LEFT FRONT WHEEL SPEED SENSOR SIGNAL
2	B9 18RD	LEFT FRONT WHEEL SPEED SENSOR 12 VOLT SUPPLY
3	-	-
4	F12 18DB/WT	FUSED IGNITION SWITCH OUTPUT (RUN-START)
5	B3 18LG/DB	LEFT REAR WHEEL SPEED SENSOR SIGNAL
6	B4 18LG	LEFT REAR WHEEL SPEED SENSOR 12 VOLT SUPPLY
7	-	-
8	Z1 12BK	GROUND
9	A20 12RD/DB	FUSED B(+)
10	D25 18VT/YL	PCI BUS
11	-	-
12	-	-
13	-	-
14	-	-
15	B27 18RD/YL	TRACTION CONTROL SWITCH SENSE
16	-	-
17	-	-
18	L50 18WT/TN	BRAKE LAMP SWITCH OUTPUT
19	B6 18WT/DB	RIGHT FRONT WHEEL SPEED SENSOR SIGNAL
20	B7 18WT	RIGHT FRONT WHEEL SPEED SENSOR 12 VOLT SUPPLY
21	-	-
22	B2 18YL	RIGHT REAR WHEEL SPEED SENSOR 12 VOLT SUPPLY
23	B1 18YL/DB	RIGHT REAR WHEEL SPEED SENSOR SIGNAL
24	Z1 12BK	GROUND
25	A10 12RD/DG	FUSED B(+)

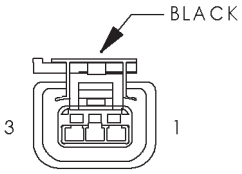

CRANKSHAFT POSITION SENSOR

CRANKSHAFT POSITION SENSOR - BLACK 3 WAY

CAV	CIRCUIT	FUNCTION
1	K7 20OR	8V SUPPLY
2	K4 20BK/LB	SENSOR GROUND
3	K24 20GY/BK	CRANKSHAFT POSITION SENSOR SIGNAL

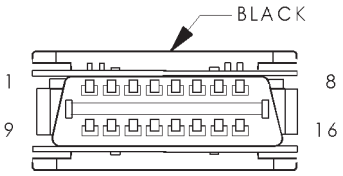

DATA LINK CONNECTOR

DATA LINK CONNECTOR - BLACK 16 WAY

CAV	CIRCUIT	FUNCTION
1	-	-
2	D25 20VT/YL	PCI BUS
3	-	-
4	Z12 20BK/TN	GROUND
5	Z11 20BK/WT	GROUND
6	D20 20LG	SCI RECEIVE
7	D21 20PK	SCI TRANSMIT
8	-	-
9	-	-
10	-	-
11	-	-
12	-	-
13	-	-
14	D6 20PK/LB (A/T)	SCI RECEIVE (A/T)
15	-	-
16	A14 18RD/WT	FUSED B(+)

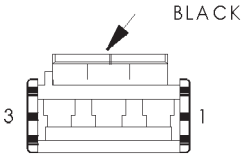

DOME LAMP

DOME LAMP - BLACK 3 WAY

CAV	CIRCUIT	FUNCTION
1	-	-
2	M1 20PK	FUSED B(+)
3	M2 20BK/YL (EXCEPT BUILT-UP-EX-PORT LIGHTS PACKAGE)	COURTESY LAMPS DRIVER
3	M2 20YL	COURTESY LAMPS DRIVER

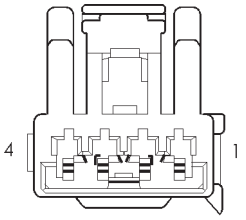

DOME LAMP/ INTRUSION SENSOR (BUILT-UP-EXPORT)

DOME LAMP/INTRUSION SENSOR (BUILT-UP-EXPORT) - 4 WAY

CAV	CIRCUIT	FUNCTION
1	M2 20YL	COURTESY LAMPS DRIVER
2	M1 20PK	FUSED B(+)
3	Z2 20BK/LG	GROUND
4	G120 20WT/LB	INTRUSION SENSOR SIGNAL

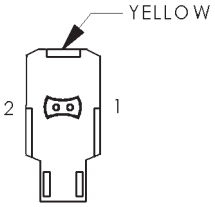

DRIVER AIRBAG MODULE

DRIVER AIRBAG MODULE - YELLOW 2 WAY

CAV	CIRCUIT	FUNCTION
1	R143 18BK/LB (NORMAL BUILD)	DRIVER SQUIB NO. 1 LINE 1
1	R143 22BK/LB (EARLY BUILD)	DRIVER SQUIB NO. 1 LINE 2
2	R145 18DG/LB (NORMAL BUILD)	DRIVER SQUIB NO. 1 LINE 1
2	R145 22DG/LB (EARLY BUILD)	DRIVER SQUIB NO. 1 LINE 2

DRIVER CYLINDER LOCK SWITCH

DRIVER CYLINDER LOCK SWITCH - 2 WAY

CAV	CIRCUIT	FUNCTION
1	P97 18LG	DRIVER DOOR SWITCH MUX
2	Z1 18BK	GROUND

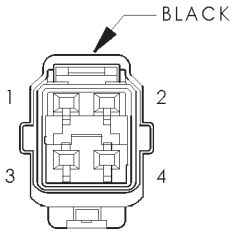

DRIVER DOOR LOCK MOTOR (EARLY BUILD)

DRIVER DOOR LOCK MOTOR (EARLY BUILD) - BLACK 4 WAY

CAV	CIRCUIT	FUNCTION
1	-	-
2	-	-
3	P34 18PK/BK	DRIVER DOOR UNLOCK DRIVER
4	P33 18OR/BK	DRIVER DOOR LOCK DRIVER

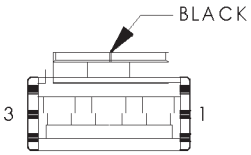

DRIVER DOOR LOCK SWITCH

DRIVER DOOR LOCK SWITCH - BLACK 3 WAY

CAV	CIRCUIT	FUNCTION
1	L7 18BK/YL	HEADLAMP SWITCH OUTPUT
2	P97 18LG	DRIVER DOOR SWITCH MUX
2	P97 20WT/DG	DRIVER DOOR SWITCH MUX
3	Z1 20BK	GROUND

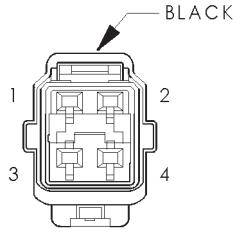

DRIVER DOOR POWER LOCK MOTOR/AJAR SWITCH (NORMAL BUILD)

DRIVER DOOR POWER LOCK MOTOR/AJAR SWITCH (NORMAL BUILD) - BLACK 4 WAY

CAV	CIRCUIT	FUNCTION
1	G74 18TN/DB (RHD)	RIGHT FRONT DOOR AJAR SWITCH SENSE
1	G75 18TN/DB (LHD)	LEFT FRONT DOOR AJAR SWITCH SENSE
2	Z1 18BK	GROUND
3	P34 18PK/BK	DRIVER DOOR UNLOCK DRIVER
4	P33 18OR/BK	DRIVER DOOR LOCK DRIVER

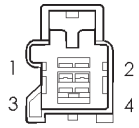

DRIVER HEATED SEAT CUSHION (NORMAL BUILD)

DRIVER HEATED SEAT CUSHION (NORMAL BUILD) - 4 WAY

CAV	CIRCUIT	FUNCTION
1	Z121 18BK	GROUND
2	P131 18RD/DG	DRIVER SEAT HEATER B(+) DRIVER
3	P141 20TN/LB	DRIVER SEAT TEMPERATURE SENSOR INPUT
4	P143 20BK/DG	DRIVER SEAT TEMPERATURE 5V SUPPLY

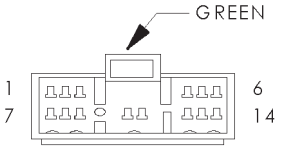

DRIVER HEATED SEAT MODULE (NORMAL BUILD)

DRIVER HEATED SEAT MODULE (NORMAL BUILD) - GREEN 14 WAY

CAV	CIRCUIT	FUNCTION
1	P7 20LB/BK	DRIVER HEATED SEAT SWITCH
2	P141 20TN/LB	DRIVER SEAT TEMPERATURE SENSOR INPUT
3	-	-
4	F99 18RD/WT	FUSED HEATED SEAT RELAY OUTPUT
5	P131 18RD/DG	DRIVER SEAT HEATER B(+) DRIVER
6	F99 18RD/WT	FUSED HEATED SEAT RELAY OUTPUT
7	-	-
8	P143 20BK/DG	DRIVER SEAT TEMPERATURE 5V SUPPLY
9	-	-
10	-	-
11	-	-
12	P137 20VT/DG	DRIVER SEAT LOW HEAT LED DRIVER
13	Z121 18BK	GROUND
14	P139 2OVT/WT	DRIVER SEAT HIGH HEAT LED DRIVER

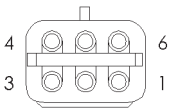

DRIVER HEATED SEAT SWITCH (NORMAL BUILD)

DRIVER HEATED SEAT SWITCH (NORMAL BUILD) - 6 WAY

CAV	CIRCUIT	FUNCTION
1	P137 20VT/DG	DRIVER SEAT LOW HEAT LED DRIVER
2	-	-
3	Z121 18BK	GROUND
4	F99 18RD/WT	FUSED HEATED SEAT RELAY OUTPUT
5	P139 20VT/WT	DRIVER SEAT HIGH LED DRIVER
6	P7 20LB/BK	DRIVER HEATED SEAT SWITCH

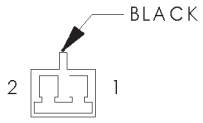

DRIVER SEAT BELT SWITCH

DRIVER SEAT BELT SWITCH - BLACK 2 WAY

CAV	CIRCUIT	FUNCTION
1	G10 20LG/RD	SEAT BELT SWITCH SENSE
2	Z1 20BK	GROUND

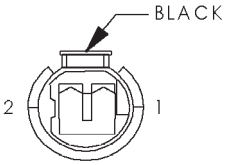

EGR SOLENOID

EGR SOLENOID - BLACK 2 WAY

CAV	CIRCUIT	FUNCTION
1	A142 18DG/OR	AUTOMATIC SHUT DOWN RELAY OUTPUT
2	K35 20GY/YL	EGR SOLENOID CONTROL

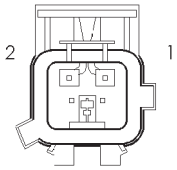

ENGINE COOLANT TEMPERATURE SENSOR

ENGINE COOLANT TEMPERATURE SENSOR - 2 WAY

CAV	CIRCUIT	FUNCTION
1	K4 20BK/LB	SENSOR GROUND
2	K2 20TN/BK	ENGINE COOLANT TEMPERATURE SENSOR SIGNAL

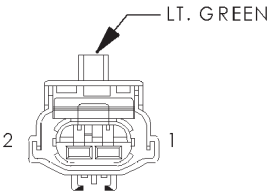

ENGINE OIL PRESSURE SWITCH

ENGINE OIL PRESSURE SWITCH - LT. GREEN 2 WAY

CAV	CIRCUIT	FUNCTION
1	G6 20GY	ENGINE OIL PRESSURE SWITCH SENSE
2	-	-

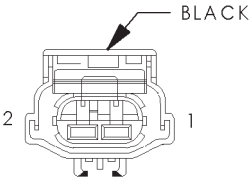

EVAP PURGE SOLENOID

EVAP PURGE SOLENOID - BLACK 2 WAY

CAV	CIRCUIT	FUNCTION
1	K108 20VT/RD (EARLY BUILD)	EVAP PURGE SOLENOID SENSE
1	K108 20WT/TN (LHD NORMAL BUILD)	EVAP PURGE SOLENOID SENSE
1	K108 20VT/RD (RHD NORMAL BUILD)	EVAP PURGE SOLENOID SENSE
2	K52 20PK/BK	EVAP PURGE SOLENOID CONTROL

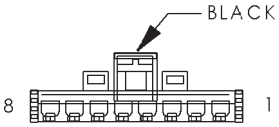

FRONT POWER WINDOW SWITCH (EARLY BUILD)

FRONT POWER WINDOW SWITCH (EARLY BUILD) - BLACK 8 WAY

CAV	CIRCUIT	FUNCTION
1	Q12 14BR/LB	RIGHT FRONT WINDOW DRIVER (UP)
2	Q22 14VT/WT	RIGHT FRONT WINDOW DRIVER (DOWN)
3	F21 14TN	FUSED IGNITION SWITCH OUTPUT (RUN)
4	E2 20OR	PANEL LAMPS DRIVER
5	Q1 14YL	WINDOW SWITCH SUPPLY
6	Q21 14WT	LEFT FRONT WINDOW DRIVER (DOWN)
7	Q11 14LB	LEFT FRONT WINDOW DRIVER (UP)
8	Z1 14BK	GROUND

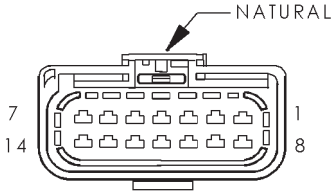

FRONT POWER WINDOW SWITCH (NORMAL BUILD)

FRONT POWER WINDOW SWITCH (NORMAL BUILD) - NATURAL 14 WAY

CAV	CIRCUIT	FUNCTION
1	Q18 14GY/BK	MASTER RIGHT REAR WINDOW DRIVER (UP)
2	Q28 14DG/WT	MASTER RIGHT REAR WINDOW DRIVER (DOWN)
3	Q22 14VT/WT	RIGHT FRONT WINDOW DRIVER (DOWN)
4	Z1 14BK	GROUND
5	Q1 14YL	WINDOW SWITCH SUPPLY
6	E2 20OR	PANEL LAMPS DRIVER
7	Q12 14BR/LB	RIGHT FRONT WINDOW DRIVER (UP)
8	Q17 14DB/WT	MASTER LEFT REAR WINDOW DRIVER (UP)
9	Q27 14RD/BK	MASTER LEFT REAR WINDOW DRIVER (DOWN)
10	-	-
11	-	-
12	F21 14TN	FUSED IGNITION SWITCH OUTPUT (RUN)
13	Q21 14WT	LEFT FRONT WINDOW DRIVER (DOWN)
14	Q11 14LB	LEFT FRONT WINDOW DRIVER (UP)

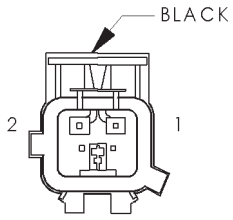

FRONT WASHER PUMP MOTOR

FRONT WASHER PUMP MOTOR - BLACK 2 WAY

CAV	CIRCUIT	FUNCTION
1	V20 18BK/WT	REAR WASHER MOTOR CONTROL
2	V10 18BR	WASHER SWITCH SENSE

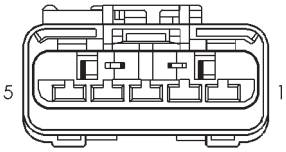

FRONT WIPER MOTOR

FRONT WIPER MOTOR - 5 WAY

CAV	CIRCUIT	FUNCTION
1	Z1 18BK (RHD EARLY BUILD)	GROUND
1	Z1 16BK (LHD EARLY BUILD)	GROUND
1	Z1 16BK (NORMAL BUILD)	GROUND
2	V5 18DG	WIPER SWITCH MODE SENSE
3	F13 16DB (EARLY BUILD)	FUSED IGNITION SWITCH OUTPUT (RUN-ACC)
3	F88 16RD/WT (NORMAL BUILD)	FUSED IGNITION SWITCH OUTPUT (RUN-ACC)
4	V3 16BR/WT	WIPER SWITCH LOW SPEED OUTPUT
5	V4 16RD/YL	WIPER SWITCH HIGH SPEED OUTPUT

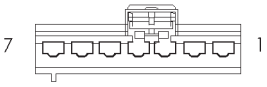

FRONT WIPER/ WASHER SWITCH

FRONT WIPER/WASHER SWITCH - 7 WAY

CAV	CIRCUIT	FUNCTION
1	V5 18DG	WIPER SWITCH MODE SENSE
2	Z1 18BK	GROUND
3	V10 18BR	WASHER SWITCH SENSE
4	F13 16DB (EARLY BUILD)	WASHER SWITCH SENSE
4	F88 16DB (NORMAL BUILD)	FUSED IGNITION SWITCH OUTPUT (RUN-ACC)
5	V4 16RD/YL	WIPER SWITCH HIGH SPEED OUTPUT
6	V3 16BR/WT	WIPER SWITCH LOW SPEED OUTPUT
7	-	-

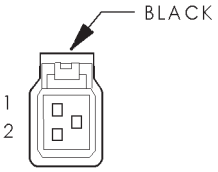

FUEL INJECTOR NO. 1

FUEL INJECTOR NO. 1 - BLACK 2 WAY

CAV	CIRCUIT	FUNCTION
1	K11 18WT/DB	FUEL INJECTOR NO. 1 DRIVER
2	A142 18DG/OR	AUTOMATIC SHUT DOWN RELAY OUTPUT

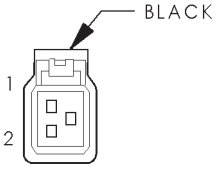

FUEL INJECTOR NO. 2

FUEL INJECTOR NO. 2 - BLACK 2 WAY

CAV	CIRCUIT	FUNCTION
1	K12 18TN	FUEL INJECTOR NO. 2 DRIVER
2	A142 18DG/OR	AUTOMATIC SHUT DOWN RELAY OUTPUT

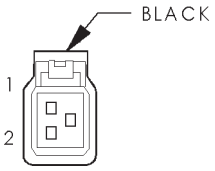

FUEL INJECTOR NO. 3

FUEL INJECTOR NO. 3 - BLACK 2 WAY

CAV	CIRCUIT	FUNCTION
1	K13 18YL/WT	FUEL INJECTOR NO. 3 DRIVER
2	A142 18DG/OR	AUTOMATIC SHUT DOWN RELAY OUTPUT

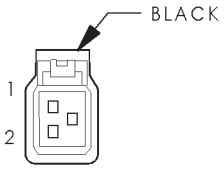

FUEL INJECTOR NO. 4

FUEL INJECTOR NO. 4 - BLACK 2 WAY

CAV	CIRCUIT	FUNCTION
1	K14 18LB/BR	FUEL INJECTOR NO. 4 DRIVER
2	A142 18DG/OR	AUTOMATIC SHUT DOWN RELAY OUTPUT

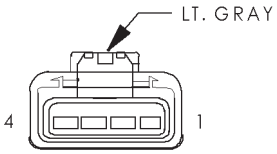

FUEL PUMP MODULE

FUEL PUMP MODULE - LT. GRAY 4 WAY

CAV	CIRCUIT	FUNCTION
1	Z1 16BK	GROUND
2	Z2 20BK/LG	GROUND
3	G4 20DB	FUEL LEVEL SENSOR SIGNAL
4	A141 16DG/WT	FUEL PUMP RELAY OUTPUT

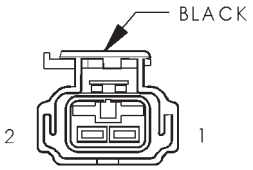

GENERATOR

GENERATOR - BLACK 2 WAY

CAV	CIRCUIT	FUNCTION
1	K20 18DG	GENERATOR FIELD
2	A142 18DG/OR	AUTOMATIC SHUT DOWN RELAY OUTPUT

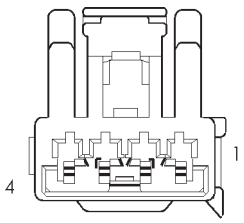

HEADLAMP LEVELING SWITCH (BUILT-UP-EXPORT)

HEADLAMP LEVELING SWITCH (BUILT-UP-EXPORT) - 4 WAY

CAV	CIRCUIT	FUNCTION
1	L13 20BR/YL	HEADLAMP ADJUST SIGNAL
2	L43 18VT	FUSED LEFT LOW BEAM OUTPUT
3	Z1 20BK	GROUND
4	E2 20OR	PANEL LAMPS DRIVER

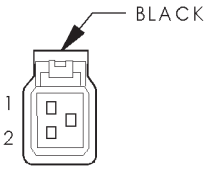

HIGH NOTE HORN

HIGH NOTE HORN - BLACK 2 WAY

CAV	CIRCUIT	FUNCTION
1	X2 20DG/RD	HORN RELAY OUTPUT
2	Z1 20BK	GROUND

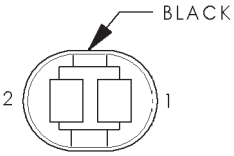

HOOD AJAR SWITCH

HOOD AJAR SWITCH - BLACK 2 WAY

CAV	CIRCUIT	FUNCTION
1	G70 20BR/TN	HOOD AJAR SWITCH SENSE
2	Z1 18BK (RHD)	GROUND
2	Z1 20BK (LHD)	GROUND

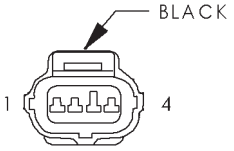

IDLE AIR CONTROL MOTOR

IDLE AIR CONTROL MOTOR - BLACK 4 WAY

CAV	CIRCUIT	FUNCTION
1	K39 20GY/RD (EARLY BUILD)	IDLE AIR CONTROL NO. 1 DRIVER
1	K39 18GY/RD (NORMAL BUILD)	IDLE AIR CONTROL NO. 1 DRIVER
2	K60 20YL/BK (EARLY BUILD)	IDLE AIR CONTROL NO. 2 DRIVER
2	K60 18YL/BK (NORMAL BUILD)	IDLE AIR CONTROL NO. 2 DRIVER
3	K40 20BR/WT (EARLY BUILD)	IDLE AIR CONTROL NO. 3 DRIVER
3	K40 18BR/WT (NORMAL BUILD)	IDLE AIR CONTROL NO. 3 DRIVER
4	K59 20VT/BK (EARLY BUILD)	IDLE AIR CONTROL NO. 4 DRIVER
4	K59 18VT/BK (NORMAL BUILD)	IDLE AIR CONTROL NO. 4 DRIVER

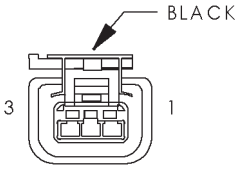

IGNITION COIL

IGNITION COIL - BLACK 3 WAY

CAV	CIRCUIT	FUNCTION
1	K17 18DB/TN	IGNITION NO. 2 DRIVER
2	A142 18DG/OR	AUTOMATIC SHUT DOWN RELAY OUTPUT
3	K19 18BK/GY	IGNITION COIL NO. 1 DRIVER

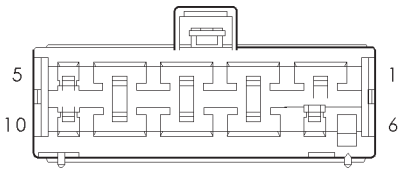

IGNITION SWITCH

IGNITION SWITCH - 10 WAY

CAV	CIRCUIT	FUNCTION
1	A1 14RD	FUSED B(+)
2	A21 14DB	IGNITION SWITCH OUTPUT (RUN-START)
3	F30 16RD	IGNITION SWITCH OUTPUT (RUN-ACC)
4	F1 16DB/BK	FUSED B(+)
5	G26 20LB	KEY-IN IGNITION SWITCH SENSE
6	A41 14YL	FUSED IGNITION SWITCH OUTPUT (START)
7	A31 14BK/WT	FUSED IGNITION SWITCH OUTPUT (RUN-ACC)
8	A22 12BK/OR	FUSED IGNITION SWITCH OUTPUT (RUN)
9	A2 12PK/BK	FUSED B(+)
10	-	-

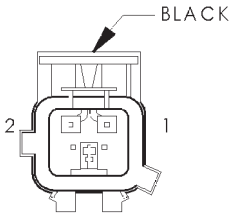

INLET AIR TEMPERATURE SENSOR

INLET AIR TEMPERATURE SENSOR - BLACK 2 WAY

CAV	CIRCUIT	FUNCTION
1	K21 20BK/RD (EARLY BUILD)	INLET AIR TEMPERATURE SENSOR SIGNAL
1	K21 18BK/RD (NORMAL BUILD)	INLET AIR TEMPERATURE SENSOR SIGNAL
2	K4 20BK/LB (EARLY BUILD)	SENSOR GROUND
2	K4 18BK/LB (NORMAL BUILD)	SENSOR GROUND

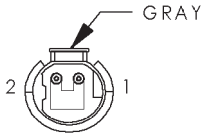

INPUT SPEED SENSOR

INPUT SPEED SENSOR - GRAY 2 WAY

CAV	CIRCUIT	FUNCTION
1	T13 20DB/BK	SPEED SENSOR GROUND
2	T52 20RD/BK	INPUT SPEED SENSOR SIGNAL

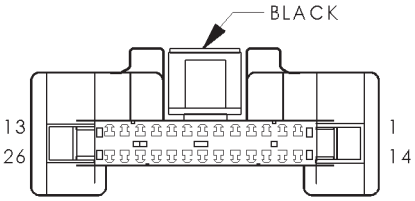

INSTRUMENT CLUSTER C1

INSTRUMENT CLUSTER C1 - BLACK 26 WAY

CAV	CIRCUIT	FUNCTION
1	Z1 18BK	GROUND
2	Z2 20BK/LG (NORMAL BUILD)	GROUND
3	L7 18BK/YL	HEADLAMP SWITCH OUTPUT
4	M1 20PK	FUSED B(+)
5	-	-
6	-	-
7	M2 20YL	COURTESY LAMPS DRIVER
8	-	-
9	G75 20TN (LHD)	LEFT DOOR AJAR SWITCH SENSE
9	G74 20TN/RD (RHD)	RIGHT DOOR AJAR SWITCH SENSE
10	L161 18LG/OR	LEFT TURN SIGNAL (OUT)
11	L61 18LG	LEFT TURN SIGNAL (IN)
12	L160 18TN/RD	RIGHT TURN SIGNAL (OUT)
13	L60 18TN	RIGHT TURN SIGNAL (IN)
14	G5 20DB/BK (NORMAL BUILD)	FUSED IGNITION SWITCH OUTPUT (RUN-START)
14	G5 20DB/BK (EARLY BUILD)	FUSED IGNITION SWITCH OUTPUT (RUN-START)
14	G5 20DB/WT (NORMAL BUILD VTSS)	FUSED IGNITION SWITCH OUTPUT (RUN-START)
15	-	-
16	-	-
17	L4 16VT/WT	DIMMER SWITCH LOW BEAM OUTPUT
18	L3 16RD/OR	DIMMER SWITCH HIGH BEAM OUTPUT
19	G26 20LB	KEY-IN IGNITION SWITCH SENSE
20	G10 20LG/RD	SEAT BELT SWITCH SENSE
21	G9 20GY/BK (EARLY BUILD)	RED BRAKE WARNING INDICATOR DRIVER
21	G11 20GY/BK (NORMAL BUILD)	RED BRAKE WARNING INDICATOR DRIVER
22	E2 20OR	PANEL LAMPS DRIVER
23	M9 20DB/OR	PASSENGER DOOR AJAR/RKE SENSE
24	G78 20TN/BK	LIFTGATE AJAR SWITCH SENSE
25	-	-
26	D25 20VT/YL	PCI BUS

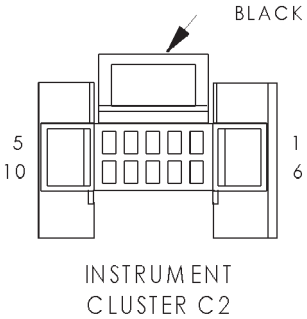

INSTRUMENT CLUSTER C2 - BLACK 10 WAY

CAV	CIRCUIT	FUNCTION
1	L39 18LB (FOG LAMPS)	FOG LAMP SWITCH OUTPUT
2	G69 20BK/OR (POWER MIRRORS)	VTSS INDICATOR DRIVER
3	-	-
4	-	-
5	-	-
6	L38 18BR/WT (BUILT-UP-EXPORT)	REAR FOG LAMP SWITCH OUTPUT
7	E19 20RD	PANEL LAMPS DIMMER SIGNAL
8	-	-
9	G4 20DB	FUEL LEVEL SENSOR SIGNAL
10	-	-

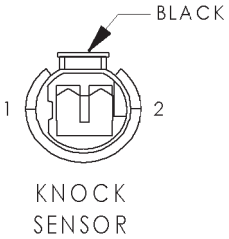

KNOCK SENSOR - BLACK 2 WAY

CAV	CIRCUIT	FUNCTION
1	K42 20DB/LG	KNOCK SENSOR SIGNAL
2	K4 20BK/LB	SENSOR GROUND

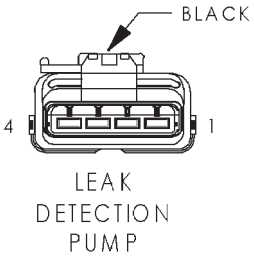

LEAK DETECTION PUMP - BLACK 4 WAY

CAV	CIRCUIT	FUNCTION
1	-	-
2	F18 20LG/BK	FUSED IGNITION SWITCH OUTPUT (RUN-START)
3	K106 20WT/DG	LEAK DETECTION PUMP SOLENOID CONTROL
4	K107 20OR/YL	LEAK DETECTION PUMP SWITCH SENSE

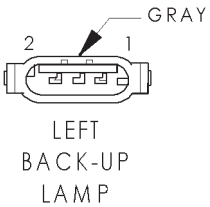

LEFT BACK-UP LAMP - GRAY 2 WAY

CAV	CIRCUIT	FUNCTION
1	L1 18VT/BK	BACK-UP LAMP FEED
2	Z1 18BK	GROUND

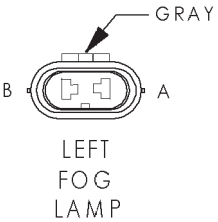

LEFT FOG LAMP - GRAY 2 WAY

CAV	CIRCUIT	FUNCTION
A	L39 18LB	FOG LAMP SWITCH OUTPUT
B	Z1 18BK (NORMAL BUILD)	GROUND
B	Z1 20BK (EARLY BUILD)	GROUND

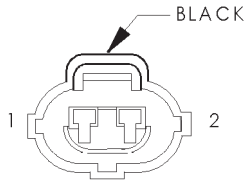

LEFT FRONT DOOR AJAR SWITCH (BASE) (NORMAL BUILD)

LEFT FRONT DOOR AJAR SWITCH (BASE) (NORMAL BUILD) - BLACK 2 WAY

CAV	CIRCUIT	FUNCTION
1	G75 18TN/DB	LEFT DOOR AJAR SWITCH SENSE
2	Z1 18BK	GROUND

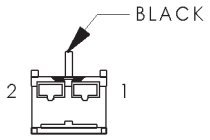

LEFT FRONT DOOR SPEAKER

LEFT FRONT DOOR SPEAKER - BLACK 2 WAY

CAV	CIRCUIT	FUNCTION
1	X53 18DG (EARLY BUILD)	LEFT FRONT SPEAKER (+)
1	X55 18BR/DB (NORMAL BUILD)	LEFT FRONT SPEAKER (-)
2	X55 18BR/RD (EARLY BUILD)	LEFT FRONT SPEAKER (-)
2	X53 18DG/VT (NORMAL BUILD)	LEFT FRONT SPEAKER (+)

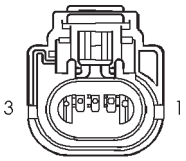

LEFT FRONT PARK/TURN SIGNAL LAMP

LEFT FRONT PARK/TURN SIGNAL LAMP - 3 WAY

CAV	CIRCUIT	FUNCTION
1	Z1 18BK	GROUND
2	L7 18BK/YL (EXCEPT BUILT-UP-EX-PORT)	HEADLAMP SWITCH OUTPUT
3	L161 18LG/OR	LEFT TURN SIGNAL (OUT)

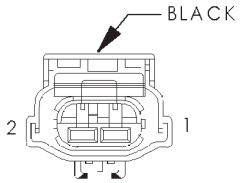

LEFT FRONT POWER WINDOW MOTOR

LEFT FRONT POWER WINDOW MOTOR - BLACK 2 WAY

CAV	CIRCUIT	FUNCTION
1	Q21 14WT	DRIVER WINDOW DRIVER (DOWN)
2	Q11 14LB	DRIVER WINDOW DRIVER (UP)

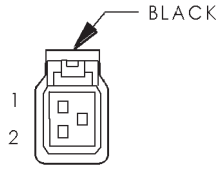

LEFT FRONT SIDE MARKER (BUILT-UP-EXPORT)

LEFT FRONT SIDE MARKER (BUILT-UP-EXPORT) - BLACK 2 WAY

CAV	CIRCUIT	FUNCTION
1	L61 18LG	LEFT TURN SIGNAL
2	Z1 18BK	GROUND

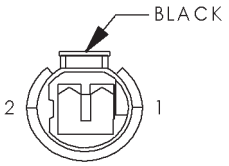

LEFT FRONT WHEEL SPEED SENSOR

LEFT FRONT WHEEL SPEED SENSOR - BLACK 2 WAY

CAV	CIRCUIT	FUNCTION
1	B9 18RD	LEFT FRONT WHEEL SPEED SENSOR 12 VOLT SUPPLY
2	B8 18RD/DB	LEFT FRONT WHEEL SPEED SENSOR SIGNAL

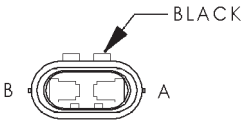

LEFT HIGH BEAM HEADLAMP

LEFT HIGH BEAM HEADLAMP - BLACK 2 WAY

CAV	CIRCUIT	FUNCTION
A	L3 16RD/OR	DIMMER SWITCH HIGH BEAM OUTPUT
B	Z1 16BK	GROUND

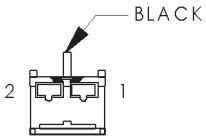

LEFT INSTRUMENT PANEL SPEAKER

LEFT INSTRUMENT PANEL SPEAKER - BLACK 2 WAY

CAV	CIRCUIT	FUNCTION
1	X53 18VT/DG	LEFT INSTRUMENT PANEL SPEAKER (+)
2	X55 18DB/RD	LEFT INSTRUMENT PANEL SPEAKER (-)

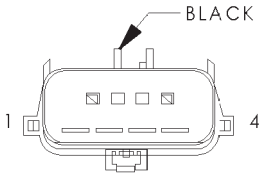

LEFT LAVALIER MODULE (BUILT-UP-EXPORT)

LEFT LAVALIER MODULE (BUILT-UP-EXPORT) - BLACK 4 WAY

CAV	CIRCUIT	FUNCTION
1	L7 18BK/YL	HEADLAMP SWITCH OUTPUT
2	Z1 18BK	GROUND
3	L13 20BR/YL	HEADLAMP ADJUST SIGNAL
4	L43 18VT	FUSED LEFT LOW BEAM OUTPUT

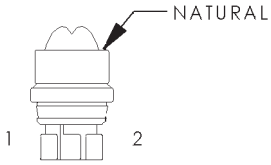

LEFT LICENSE LAMP (BUILT-UP-EXPORT)

LEFT LICENSE LAMP (BUILT-UP-EXPORT) - NATURAL 2 WAY

CAV	CIRCUIT	FUNCTION
1	L7 18BK/YL	HEADLAMP SWITCH OUTPUT
2	Z1 18BK	GROUND

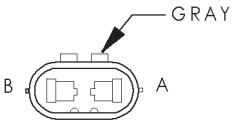

LEFT LOW BEAM HEADLAMP

LEFT LOW BEAM HEADLAMP - GRAY 2 WAY

CAV	CIRCUIT	FUNCTION
A	L43 18VT (LHD)	FUSED LEFT LOW BEAM OUTPUT
A	L43 14VT (RHD)	FUSED LEFT LOW BEAM OUTPUT
B	Z1 12BK (LHD)	GROUND
B	Z1 14BK (RHD)	GROUND

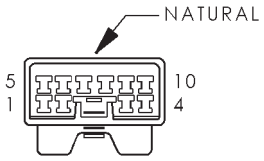

LEFT POWER MIRROR

LEFT POWER MIRROR - NATURAL 10 WAY

CAV	CIRCUIT	FUNCTION
1	Z1 20BK	GROUND
2	P76 20YL/PK (RHD)	LEFT/RIGHT MIRROR RIGHT/DOWN MOVEMENT
2	P73 20YL/PK (LHD)	LEFT MIRROR RIGHT/DOWN MOVEMENT
3	C16 20LB/YL	FUSED REAR WINDOW DEFOGGER SWITCH OUTPUT
4	P71 20YL/BK (EARLY BUILD)	LEFT MIRROR UP MOVEMENT
4	P71 20BR/YL (NORMAL BUILD)	LEFT MIRROR UP MOVEMENT
5	P75 20DB/WT	LEFT MIRROR LEFT MOVEMENT
6	P159 20DG/WT (RHD)	MIRROR UNFOLD
7	-	-
8	-	-
9	-	-
10	P160 20LB/BK (RHD)	MIRROR FOLD

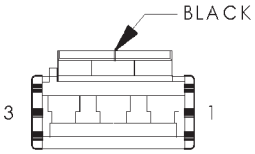

LEFT REAR DOOR POWER LOCK MOTOR

LEFT REAR DOOR POWER LOCK MOTOR - BLACK 3 WAY

CAV	CIRCUIT	FUNCTION
1	P35 18OR/VT	DOOR LOCK DRIVER
2	-	-
3	P36 18PK/VT	DOOR UNLOCK DRIVER

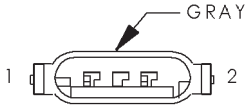

LEFT REAR FOG LAMP (LHD)

LEFT REAR FOG LAMP (LHD) - GRAY 2 WAY

CAV	CIRCUIT	FUNCTION
1	L38 18BR/WT	REAR FOG LAMP SWITCH OUTPUT
2	Z1 18BK	GROUND

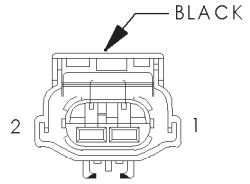

LEFT REAR POWER WINDOW MOTOR

LEFT REAR POWER WINDOW MOTOR - BLACK 2 WAY

CAV	CIRCUIT	FUNCTION
1	Q23 14RD/DG (NORMAL BUILD)	LEFT REAR WINDOW DRIVER (DOWN)
1	Q23 14RD/WT (EARLY BUILD)	LEFT REAR WINDOW DRIVER (DOWN)
2	Q13 14DB/GY	LEFT REAR WINDOW DRIVER (UP)

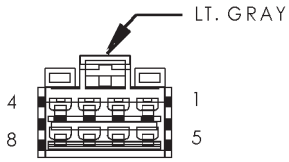

LEFT REAR POWER WINDOW SWITCH (NORMAL BUILD)

LEFT REAR POWER WINDOW SWITCH (NORMAL BUILD) - LT. GRAY 8 WAY

CAV	CIRCUIT	FUNCTION
1	-	-
2	Q17 14DB/WT	MASTER LEFT REAR WINDOW DRIVER (UP)
3	Q27 14RD/BK	MASTER LEFT REAR WINDOW DRIVER (DOWN)
4	Q1 14YL	WINDOW SWITCH SUPPLY
5	Q13 14DB/GY	LEFT REAR WINDOW DRIVER (UP)
6	Q1 14YL	WINDOW WITCH SUPPLY
7	Z1 14BK	GROUND
8	Q23 14RD/WT	LEFT REAR WINDOW DRIVER (DOWN)

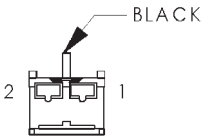

LEFT REAR SPEAKER

LEFT REAR SPEAKER - BLACK 2 WAY

CAV	CIRCUIT	FUNCTION
1	X57 18BR/LB	LEFT REAR SPEAKER (-)
2	X51 18BR/YL	LEFT REAR SPEAKER (+)

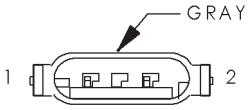

LEFT REAR TURN SIGNAL LAMP

LEFT REAR TURN SIGNAL LAMP - GRAY 2 WAY

CAV	CIRCUIT	FUNCTION
1	L63 18DG/RD	LEFT REAR TURN SIGNAL
2	Z1 18BK	GROUND

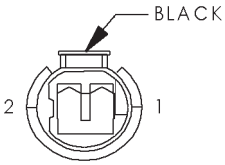

LEFT REAR WHEEL SPEED SENSOR

LEFT REAR WHEEL SPEED SENSOR - BLACK 2 WAY

CAV	CIRCUIT	FUNCTION
1	B4 20LG	LEFT REAR WHEEL SPEED SENSOR 12 VOLT SUPPLY
2	B3 20LG/DB	LEFT REAR WHEEL SPEED SENSOR SIGNAL

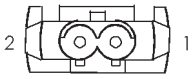

LEFT
SEAT AIRBAG

LEFT SEAT AIRBAG - 2 WAY

CAV	CIRCUIT	FUNCTION
1	R31 18OR	LEFT SEAT SQUIB LINE 2
2	R33 18WT	LEFT SEAT SQUIB LINE 1

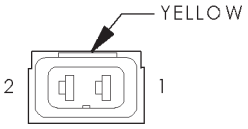

LEFT
SEAT BELT
TENSIONER

LEFT SEAT BELT TENSIONER - YELLOW 2 WAY

CAV	CIRCUIT	FUNCTION
1	R53 18LG/YL	LEFT SEAT BELT TENSIONER LINE 2
2	R55 18LG/DG	LEFT SEAT BELT TENSIONER LINE 1

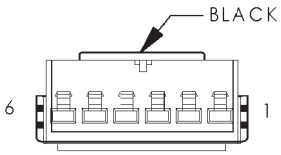

LEFT SIDE
IMPACT AIRBAG
CONTROL MODULE
(FULL OPTIONS)

LEFT SIDE IMPACT AIRBAG CONTROL MODULE (FULL OPTIONS) - BLACK 6 WAY

CAV	CIRCUIT	FUNCTION
1	F15 20DG/WT	FUSED IGNITION SWITCH OUTPUT (RUN-START)
2	D25 20VT/YL	PCI BUS
3	R33 20LG/WT	LEFT SEAT SQUIB LINE 1
4	R31 20LG/OR	LEFT SEAT SQUIB LINE 2
5	-	-
6	Z6 20BK/PK (EARLY BUILD)	GROUND
6	Z134 20BK/PK (NORMAL BUILD)	GROUND

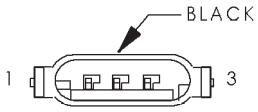

LEFT TAIL/
STOP LAMP

LEFT TAIL/STOP LAMP - BLACK 3 WAY

CAV	CIRCUIT	FUNCTION
1	L50 18WT/TN	BRAKE LAMP SWITCH OUTPUT
2	L7 18BK/YL	HEADLMAP SWITCH OUTPUT
3	Z1 18BK	GROUND

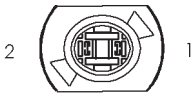

LEFT TURN
SIGNAL
INDICATOR

LEFT TURN SIGNAL INDICATOR - 2 WAY

CAV	CIRCUIT	FUNCTION
1	L61 20OR (EARLY BUILD)	LEFT TURN SIGNAL
1	L61 20LG (NORMAL BUILD)	LEFT TURN SIGNAL
2	Z1 20BK	GROUND

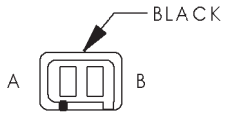

LEFT VISOR/
VANITY LAMP

LEFT VISOR/VANITY LAMP - BLACK 2 WAY

CAV	CIRCUIT	FUNCTION
A	M1 20PK	FUSED B(+)
B	Z1 20BK	GROUND

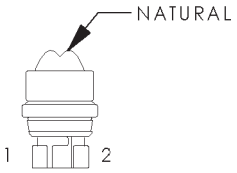

LICENSE LAMP
(EXCEPT BUILT-
UP-EXPORT)

LICENSE LAMP (EXCEPT BUILT-UP-EXPORT) - NATURAL 2 WAY

CAV	CIRCUIT	FUNCTION
1	L7 18BK/YL	HEADLAMP SWITCH OUTPUT
2	Z1 18BK	GROUND

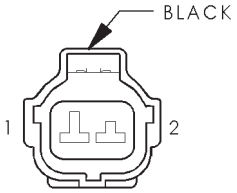

LIFTGATE
AJAR SWITCH

LIFTGATE AJAR SWITCH - BLACK 2 WAY

CAV	CIRCUIT	FUNCTION
1	G78 20TN/BK	LIFTGATE AJAR SWITCH SENSE
2	Z1 20BK	GROUND

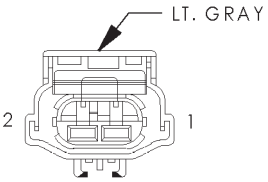

LIFTGATE
CYLINDER
LOCK SWITCH

LIFTGATE CYLINDER LOCK SWITCH - LT. GRAY 2 WAY

CAV	CIRCUIT	FUNCTION
1	P96 20WT/LG	DRIVER/PASSENGER DOOR SWITCH MUX
2	Z1 20BK	GROUND

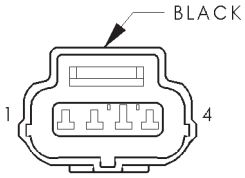

LIFTGATE
POWER LOCK
MOTOR

LIFTGATE POWER LOCK MOTOR - BLACK 4 WAY

CAV	CIRCUIT	FUNCTION
1	P35 18OR/VT	DOOR LOCK DRIVER
2	P36 18PK/VT (NORMAL BUILD)	DOOR UNLOCK DRIVER
3	P36 18PK/VT (EARLY BUILD)	DOOR UNLOCK DRIVER
4	-	-

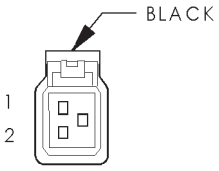

LOW NOTE HORN

LOW NOTE HORN - BLACK 2 WAY

CAV	CIRCUIT	FUNCTION
1	X2 20DG/RD	HORN RELAY OUTPUT
2	Z1 20BK	GROUND

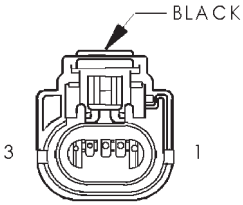

MANIFOLD ABSOLUTE PRESSURE SENSOR

MANIFOLD ABSOLUTE PRESSURE SENSOR - BLACK 3 WAY

CAV	CIRCUIT	FUNCTION
1	K1 18DG/RD (NORMAL BUILD)	MAP SENSOR SIGNAL
1	K1 20DG/RD (EARLY BUILD)	MAP SENSOR SIGNAL
2	K4 18BK/LB (NORMAL BUILD)	SENSOR GROUND
2	K4 20BK/LB (EARLY BUILD)	SENSOR GROUND
3	K6 18VT/WT (NORMAL BUILD)	5V SUPPLY
3	K6 20VT/WT (EARLY BUILD)	5V SUPPLY

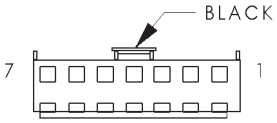

MAP/ READING LAMPS

MAP/READING LAMPS - BLACK 7 WAY

CAV	CIRCUIT	FUNCTION
1	-	-
2	Z1 20BK	GROUND
3	-	-
4	-	-
5	-	-
6	M2 20BK/YL	COURTESY LAMPS DRIVER
7	M1 20BK/PK	FUSED B(+)

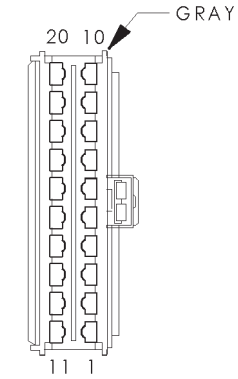

MULTI-FUNCTION SWITCH

MULTI-FUNCTION SWITCH - GRAY 20 WAY

CAV	CIRCUIT	FUNCTION
1	-	-
2	L61 18LG	LEFT TURN SIGNAL
3	L6 18DB (NORMAL BUILD)	FUSED IGNITION SWITCH OUTPUT (RUN-ACC)
3	F13 18DB (EARLY BUILD)	FUSED IGNITION SWITCH OUTPUT (RUN-ACC)
4	L63 18DG/RD	LEFT REAR TURN SIGNAL
4	L61 18LG (BUILT-UP-EXPORT NORMAL BUILD)	LEFT TURN SIGNAL
5	L62 18BR/RD	RIGHT REAR TURN SIGNAL
5	L60 18TN (BUILT-UP-EXPORT NORMAL BUILD)	RIGHT TURN SIGNAL
6	L60 18TN	RIGHT TURN SIGNAL
7	Z1 18BK (EARLY BUILD)	GROUND
7	Z2 18BK/LG (NORMAL BUILD)	GROUND
8	E19 20RD	PANEL LAMPS DIMMER SIGNAL
9	L7 18BK/YL	HEADLAMP SWITCH OUTPUT
10	-	-
11	A15 18PK/DG (EARLY BUILD)	FUSED B(+)

MULTI-FUNCTION SWITCH - GRAY 20 WAY

CAV	CIRCUIT	FUNCTION
11	A15 18PK/DG (LHD NORMAL BUILD)	FUSED B(+)
11	A15 18PK/DB (RHD NORMAL BUILD)	FUSED B(+)
12	L38 18BR/WT (BUILT-UP-EXPORT)	HEADLAMP SWITCH OUTPUT
12	L38 18BR/WT (BUILT-UP-EXPORT)	HEADLAMP SWITCH OUTPUT
13	F39 18PK/LG (EXCEPT BUILT-UP-EX-PORT NORMAL BUILD)	FUSED HEADLAMP RELAY OUTPUT
13	F39 18PK/LG (LHD BUILT-UP-EXPORT EARLY BUILD)	FUSED HEADLAMP RELAY OUTPUT
13	F39 18PK/LG (BUILT-UP-EXPORT EARLY BUILD)	FUSED B(+)
13	F39 18PK/LG (BUILT-UP-EXPORT NOR-MAL BUILD)	FUSED B(+)
14	L39 18LB	FOG LAMP SWITCH OUTPUT
15	-	-
16	L4 16VT/WT	DIMMER SWITCH LOW BEAM OUTPUT
17	L3 16RD/OR	DIMMER SWITCH HIGH BEAM OUTPUT
18	F3 12LB/OR (NORMAL BUILD)	FUSED B(+)
18	F3 16LB/OR (EARLY BUILD)	FUSED B(+)
19	F3 16LB/OR (EARLY BUILD)	FUSED B(+)
19	F3 12LB/OR (NORMAL BUILD)	FUSED B(+)
20	F33 18PK/RD	FUSED B(+)

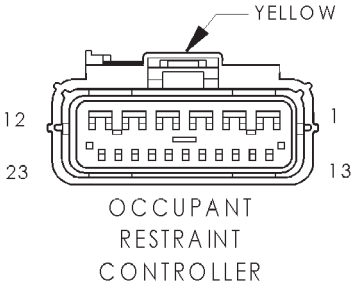

OCCUPANT RESTRAINT CONTROLLER - YELLOW 23 WAY

CAV	CIRCUIT	FUNCTION
1	R56 18LB/DG	RIGHT SEAT BELT TENSIONER LINE 1
2	R54 18LB/YL	RIGHT SEAT BELT TENSIONER LINE 2
3	-	-
4	-	-
5	R42 18BK/YL	PASSENGER SQUIB NO. 1 LINE 1
6	R44 18DG/YL	PASSENGER SQUIB NO. 1 LINE 2
7	R55 18LG/DG	LEFT SEAT BELT TENSIONER LINE 1
8	R53 18LG/YL	LEFT SEAT BELT TENSIONER LINE 2
9	-	-
10	-	-
11	R43 18BK/LB	DRIVER SQUIB NO. 1 LINE 1
12	R45 18DG/LB	DRIVER SQUIB NO. 1 LINE 2
13	-	-
14	F15 18DG/WT	FUSED IGNITION SWITCH OUTPUT (RUN-START)
15	F25 18TN/LG	FUSED IGNITION SWITCH OUTPUT (RUN)
16	Z6 18BK/PK	GROUND
17	-	-
18	-	-
19	-	-
20	-	-
21	D25 20VT/YL (EARLY BUILD)	PCI BUS
21	D25 20VT/YL (LHD NORMAL BUILD)	PCI BUS
21	D25 18VT/YL (RHD NORMAL BUILD)	PCI BUS
22	-	-
23	-	-

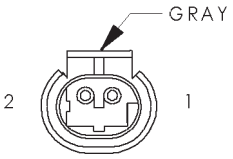

OUTPUT SPEED SENSOR

OUTPUT SPEED SENSOR - GRAY 2 WAY

CAV	CIRCUIT	FUNCTION
1	T13 20DB/BK	SPEED SENSOR GROUND
2	T14 20LG/WT	OUTPUT SPEED SENSOR SIGNAL

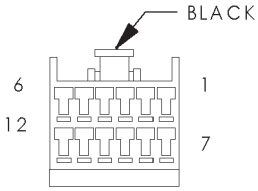

OVERHEAD CONSOLE MODULE

OVERHEAD CONSOLE MODULE - BLACK 12 WAY

CAV	CIRCUIT	FUNCTION
1	Q41 20WT (POWER SUNROOF)	SUNROOF OPEN
2	Q44 20BR (POWER SUNROOF)	SUNROOF SWITCH GROUND
3	M2 18YL (EARLY BUILD)	COURTESY LAMPS DRIVER
3	M2 20YL (NORMAL BUILD)	COURTESY LAMPS DRIVER
4	M1 20PK	FUSED B(+)
5	G31 20VT/LG	AMBIENT TEMPERATURE SENSOR SIGNAL
6	F10 20YL/RD	FUSED IGNITION SWITCH OUTPUT (RUN-ACC)
7	Q43 20VT (POWER SUNROOF)	SUNROOF VENT
8	Q42 20LB (POWER SUNROOF)	SUNROOF CLOSE
9	Z1 20BK	GROUND
10	E2 20OR	PANEL LAMPS FEED
11	G32 20BK/LB	SENSOR GROUND
12	Z2 20BK/LG	GROUND

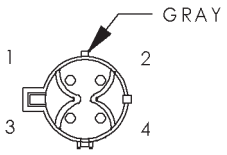

OXYGEN SENSOR 1/1 UPSTREAM

OXYGEN SENSOR 1/1 UPSTREAM - GRAY 4 WAY

CAV	CIRCUIT	FUNCTION
1	A142 18DG/OR	AUTOMATIC SHUT DOWN RELAY OUTPUT
2	K79 20OR/RD	OXYGEN SENSOR 1/1 CONTROL
3	K127 20BK/OR	OXYGEN SENSOR GROUND
4	K41 20BK/DG	OXYGEN SENSOR 1/1 SIGNAL

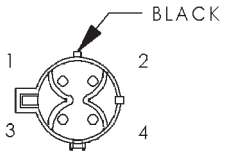

OXYGEN SENSOR 1/2 DOWNSTREAM

OXYGEN SENSOR 1/2 DOWNSTREAM - BLACK 4 WAY

CAV	CIRCUIT	FUNCTION
1	A142 18DG/OR	AUTOMATIC SHUT DOWN RELAY OUTPUT
2	Z1 20BK	GROUND
3	K127 20BK/OR	OXYGEN SENSOR GROUND
4	K141 20TN/WT	OXYGEN SENSOR 1/2 SIGNAL

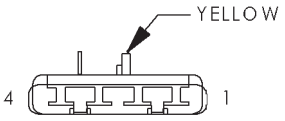

PASSENGER AIRBAG

PASSENGER AIRBAG - YELLOW 4 WAY

CAV	CIRCUIT	FUNCTION
1	-	-
2	-	-
3	R44 18DG/YL	PASSENGER SQUIB NO. 1 LINE 2
4	R42 18BK/YL	PASSENGER SQUIB NO. 1 LINE 1

PASSENGER CYLINDER LOCK SWITCH

PASSENGER CYLINDER LOCK SWITCH - 2 WAY

CAV	CIRCUIT	FUNCTION
1	P96 18LG	PASSENGER DOOR SWITCH MUX
2	Z1 18BK	GROUND

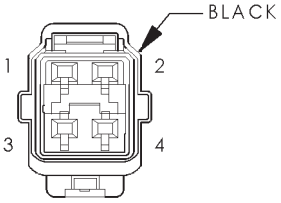

PASSENGER DOOR LOCK MOTOR (EARLY BUILD)

PASSENGER DOOR LOCK MOTOR (EARLY BUILD) - BLACK 4 WAY

CAV	CIRCUIT	FUNCTION
1	-	-
2	-	-
3	P36 18PK/BK	DOOR UNLOCK DRIVER
4	P35 18OR/BK	DOOR LOCK DRIVER

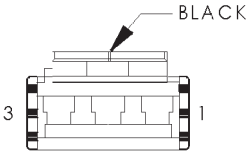

PASSENGER DOOR LOCK SWITCH

PASSENGER DOOR LOCK SWITCH - BLACK 3 WAY

CAV	CIRCUIT	FUNCTION
1	L7 18BK/YL	HEADLAMP SWITCH OUTPUT
2	P96 18LG	PASSENGER DOOR SWITCH MUX
2	P96 20WT/DG	PASSENGER DOOR SWITCH MUX
3	Z1 20BK	GROUND

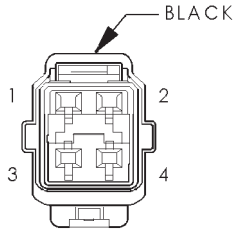

PASSENGER DOOR POWER LOCK MOTOR/ AJAR SWITCH (NORMAL BUILD)

PASSENGER DOOR POWER LOCK MOTOR/AJAR SWITCH (NORMAL BUILD) - BLACK 4

CAV	CIRCUIT	FUNCTION
1	G75 18TN/DB (RHD)	LEFT FRONT DOOR AJAR SWITCH SENSE
1	G74 18TN/DB (LHD)	RIGHT FRONT DOOR AJAR SWITCH SENSE
2	Z1 18BK	GROUND
3	P36 18PK/BK	PASSENGER DOOR UNLOCK DRIVER
4	P35 18OR/BK	PASSENGER DOOR LOCK DRIVER

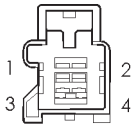

PASSENGER HEATED SEAT CUSHION (NORMAL BUILD)

PASSENGER HEATED SEAT CUSHION (NORMAL BUILD) - 4 WAY

CAV	CIRCUIT	FUNCTION
1	Z122 18BK	GROUND
2	P130 18RD/TN	PASSENGER SEAT HEATER B(+) DRIVER
3	P142 20TN/DB	PASSENGER SEAT TEMPERATURE SENSOR INPUT
4	P144 20BK/LG	PASSENGER SEAT TEMPERATURE 5V SUPPLY

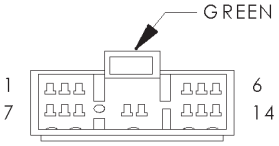

PASSENGER HEATED SEAT MODULE (NORMAL BUILD)

PASSENGER HEATED SEAT MODULE (NORMAL BUILD) - GREEN 14 WAY

CAV	CIRCUIT	FUNCTION
1	P8 20LB/WT	PASSENGER HEATED SEAT SWITCH
2	P142 20TN/DB	PASSENGER SEAT TEMPERATURE SENSOR INPUT
3	-	-
4	F98 18RD/WT	FUSED HEATED SEAT RELAY OUTPUT
5	P130 18RD/TN	PASSENGER SEAT HEATER B(+) DRIVER
6	F98 18RD/WT	FUSED HEATED SEAT RELAY OUTPUT
7	-	-
8	P144 20BK/LG	PASSENGER SEAT TEMPERATURE 5V SUPPLY
9	-	-
10	-	-
12	P138 20VT/LG	PASSENGER SEAT LOW HEAT LED DRIVER
13	Z122 18BK	GROUND
14	P140 20VT/BK	PASSENGER SEAT HIGH HEAT LED DRIVER

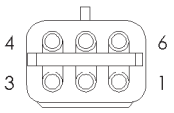

PASSENGER HEATED SEAT SWITCH (NORMAL BUILD)

PASSENGER HEATED SEAT SWITCH (NORMAL BUILD) - 6 WAY

CAV	CIRCUIT	FUNCTION
1	P138 20VT/LG	PASSENGER SEAT LOW HEAT LED DRIVER
2	-	-
3	Z122 18BK	GROUND
4	F98 18RD/WT	FUSED HEATED SEAT RELAY OUTPUT
5	P140 20VT/BK	PASSENGER SEAT HIGH HEAT LED DRIVER
6	P8 20LB/WT	PASSENGER HEATED SEAT SWITCH

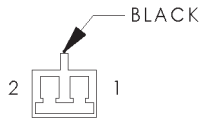

PASSENGER SEAT BELT SWITCH (RHD)

PASSENGER SEAT BELT SWITCH (RHD) - BLACK 2 WAY

CAV	CIRCUIT	FUNCTION
1	G10 20LG/RD	SEAT BELT SWTICH SENSE
2	Z1 20BK	GROUND

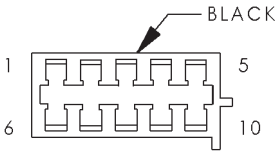

POWER MIRROR SWITCH (LHD)

POWER MIRROR SWITCH (LHD) - BLACK 10 WAY

CAV	CIRCUIT	FUNCTION
1	P73 20YL/PK	LEFT MIRROR RIGHT/DOWN MOVEMENT
2	P74 20DB/WT	RIGHT MIRROR LEFT MOVEMENT
3	Z1 20BK	GROUND
4	P71 20YL/BK	LEFT MIRROR UP MOVEMENT
5	-	-
6	L7 20BK/YL	HEADLAMP SWITCH OUTPUT
7	M1 20PK	FUSED B(+)
8	P75 20DB/WT	LEFT MIRROR LEFT MOVEMENT
9	P72 20YL	RIGHT MIRROR UP MOVEMENT
10	P70 20PK	RIGHT MIRROR RIGHT/DOWN MOVEMENT

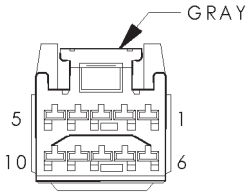

POWER MIRROR SWITCH (RHD)

POWER MIRROR SWITCH (RHD) - GRAY 10 WAY

CAV	CIRCUIT	FUNCTION
1	M1 20PK	FUSED B(+)
2	P159 20DG/WT	MIRROR UNFOLD
3	P76 20YL/PK	LEFT/RIGHT MIRROR RIGHT/DOWN MOVEMENT
4	P75 20DB/WT	LEFT MIRROR LEFT MOVEMENT
5	P71 20YL/BK	LEFT MIRROR UP MOVEMENT
6	P160 20LB/BK	MIRROR FOLD
7	Z1 20BK	GROUND
8	L7 20BK/YL	HEADLAMP SWITCH OUTPUT
9	P74 20DB/WT	RIGHT MIRROR LEFT MOVEMENT
10	P72 20YL	RIGHT MIRROR UP MOVEMENT

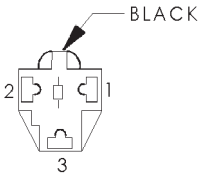

POWER OUTLET

POWER OUTLET - BLACK 3 WAY

CAV	CIRCUIT	FUNCTION
1	F30 16RD	FUSED IGNITION SWITCH OUTPUT (RUN-ACC)
1	F1 16DB/BK	FUSED B(+)
2	-	-
2	-	-
3	Z1 16BK	GROUND
3	Z1 16BK	GROUND

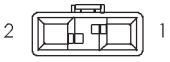

POWER SEAT MOTOR

POWER SEAT MOTOR - 2 WAY

CAV	CIRCUIT	FUNCTION
1	P120 16LG/YL (RHD)	SEAT UP DRIVER
1	P121 16LG/OR (LHD EXCEPT HEATED SEATS)	SEAT DOWN DRIVER
1	P121 16RD/LG (LHD HEATED SEATS)	SEAT DOWN DRIVER
2	P121 16LG/OR (RHD EXCEPT HEATED SEATS)	SEAT DOWN DRIVER
2	P121 16RD/LG (RHD HEATED SEATS)	SEAT DOWN DRIVER
2	P120 16LG/YL (LHD)	SEAT UP DRIVER

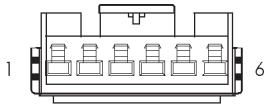

POWER SEAT SWITCH

POWER SEAT SWITCH - 6 WAY

CAV	CIRCUIT	FUNCTION
1	-	-
2	Z121 18BK (HEATED SEATS NORMAL BUILD)	GROUND
2	Z1 16BK (EXCEPT HEATED SEATS)	GROUND
3	P120 16LG/YL	SEAT UP DRIVER
4	P121 16RD/LG (HEATED SEATS NORMAL BUILD)	SEAT DOWN DRIVER
4	P121 16LG/OR (EXCEPT HEATED SEATS)	SEAT DOWN DRIVER
5	Z121 18BK (HEATED SEATS NORMAL BUILD)	GROUND
5	Z1 16BK (EXCEPT HEATED SEATS)	GROUND
6	A120 16RD/LG	FUSED B(+)

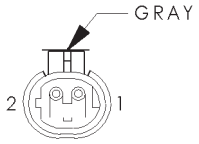

POWER STEERING PRESSURE SWITCH

POWER STEERING PRESSURE SWITCH - GRAY 2 WAY

CAV	CIRCUIT	FUNCTION
1	K10 20DB/OR	STEERING PRESSURE SWITCH SENSE
2	Z1 20BK	GROUND

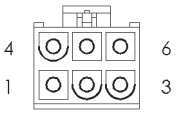

POWER SUNROOF MODULE C1

POWER SUNROOF MODULE C1 - 6 WAY

CAV	CIRCUIT	FUNCTION
1	-	-
2	L4 20WT	SUNROOF OPEN
3	-	-
4	L1 20VT	SUNROOF VENT
5	L2 20BR	SUNROOF SWITCH GROUND
6	L3 20LB	SUNROOF CLOSE

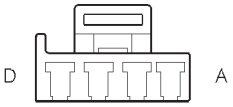

POWER SUNROOF MODULE C2

POWER SUNROOF MODULE C2 - 4 WAY

CAV	CIRCUIT	FUNCTION
A	L5 14YL/RD	FUSED IGNITION SWITCH OUTPUT (RUN-ACC)
B	L7 14DB	MOTOR TILT DOWN FEED
C	L6 14DG	MOTOR TILT UP FEED
D	Z1 14BK/VT	GROUND

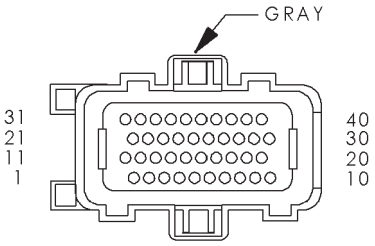

POWERTRAIN CONTROL MODULE C1

POWERTRAIN CONTROL MODULE C1 - GRAY 40 WAY

CAV	CIRCUIT	FUNCTION
1	-	-
2	-	-
3	K17 18DB/TN	IGNITION COIL NO. 2 DRIVER
4	-	-
5	V32 20YL/RD	SPEED CONTROL SUPPLY
6	A142 18DG/OR	AUTOMATIC SHUT DOWN RELAY OUTPUT
7	K13 18YL/WT	FUEL INJECTOR NO. 3 DRIVER
8	K20 18DG	GENERATOR FIELD
9	-	-
10	Z12 18BK/TN	GROUND
11	K19 18BK/GY	IGNITION COIL NO. 1 DRIVER
12	G6 20GY	ENGINE OIL PRESSURE SWITCH SENSE
13	K11 18WT/DB	FUEL INJECTOR NO. 1 DRIVER
14	-	-
15	-	-
16	K14 18LB/BR	FUEL INJECTOR NO. 4 DRIVER
17	K12 18TN	FUEL INJECTOR NO. 2 DRIVER
18	K79 20OR/RD	OXYGEN SENSOR 1/1 CONTROL
19	-	-
20	F12 20DB/WT	FUSED IGNITION SWITCH OUTPUT (RUN-START)
21	-	-
22	-	-
23	K119 20LG/BK (M/T)	CLUTCH UPSTOP SWITCH SIGNAL
24	-	-
25	K42 20DB/LG	KNOCK SENSOR SIGNAL
26	K2 20TN/BK	ENGINE COOLANT TEMPERATURE SENSOR SIGNAL
27	K127 20BK/OR	OXYGEN SENSOR GROUND
28	-	-
29	-	-
30	K41 20BK/DG	OXYGEN SENSOR 1/1 SIGNAL
31	K90 20TN	ENGINE STARTER MOTOR RELAY CONTROL
32	K24 20GY/BK	CRANKSHAFT POSITION SENSOR SIGNAL
33	K44 20TN/YL	CAMSHAFT POSITION SENSOR SIGNAL
34	-	-
35	K22 20OR/DB (EARLY BUILD)	THROTTLE POSITION SENSOR SIGNAL
35	K22 18OR/DB (NORMAL BUILD)	THROTTLE POSITION SENSOR SIGNAL
36	K1 20DG/RD (EARLY BUILD)	MAP SENSOR SIGNAL
36	K1 18DG/RD (NORMAL BUILD)	MAP SENSOR SIGNAL
37	-	-
38	C20 20BR	A/C SWITCH SENSE
39	-	-
40	K35 20GY/YL	EGR SOLENOID CONTROL

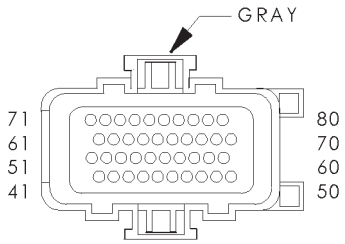

POWERTRAIN CONTROL MODULE C2

POWERTRAIN CONTROL MODULE C2 - GRAY 40 WAY

CAV	CIRCUIT	FUNCTION
41	V37 20RD/LG	SPEED CONTROL SWITCH SIGNAL
42	-	-
43	K4 20BK/LB	SENSOR GROUND
44	K7 20OR	8V SUPPLY
45	K10 20DB/OR	STEERING PRESSURE SWITCH SENSE
46	A14 18RD/WT	FUSED B(+)
47	Z11 18BK/WT	GROUND
48	K40 20BR/WT	IDLE AIR CONTROL NO. 3 DRIVER
49	K60 20YL/BK	IDLE AIR CONTROL NO. 2 DRIVER
50	Z12 18BK/TN	GROUND
51	K141 20TN/WT	OXYGEN SENSOR 1/2 SIGNAL
52	K21 20BK/RD	INLET AIR TEMPERATURE SENSOR SIGNAL
53	-	-
54	-	-
55	C24 20YL/RD	LOW SPEED RADIATOR FAN RELAY CONTROL
56	V36 20TN/RD (SPEED CONTROL)	SPEED CONTROL VACUUM SOLENOID CONTROL
57	K39 20GY/RD	IDLE AIR CONTROL NO. 1 DRIVER
58	K59 20VT/BK	IDLE AIR CONTROL NO. 4 DRIVER
59	D25 20VT/YL	PCI BUS
60	-	-
61	K6 20VT/WT	5V SUPPLY
62	K29 20WT/PK	BRAKE LAMP SWITCH SENSE
63	T10 20YL/DG (A/T)	TORQUE MANAGEMENT REQUEST SENSE
64	C28 20DB/OR	A/C COMPRESSOR CLUTCH RELAY CONTROL
65	D21 20PK	SCI TRANSMIT
66	G7 20WT/OR	VEHICLE SPEED SENSOR SIGNAL
67	K51 20DB/YL	AUTOMATIC SHUT DOWN RELAY CONTROL
68	K52 20PK/BK	EVAP PURGE SOLENOID CONTROL
69	C27 20DB/PK	HIGH SPEED RADIATOR FAN RELAY CONTROL
70	K108 20VT/RD (RHD NORMAL BUILD)	EVAP PURGE SOLENOID SENSE
70	K108 20WT/TN (LHD NORMAL BUILD)	EVAP PURGE SOLENOID SENSE
70	K108 20VT/RD (EARLY BUILD)	EVAP PURGE SOLENOID SENSE
71	G9 20GY/BK	RED BRAKE WARNING INDICATOR DRIVER
72	K107 20OR/YL (LHD EARLY BUILD)	LEAK DETECTION PUMP SWITCH SENSE
72	K107 20YL/BK (RHD EARLY BUILD)	LEAK DETECTION PUMP SWITCH SENSE
72	K107 20YL/BK (NORMAL BUILD)	LEAK DETECTION PUMP SWITCH SENSE
73	-	-
74	K31 20BR	FUEL PUMP RELAY CONTROL
75	D20 20LG	SCI RECEIVE
76	T41 20YL/RD (LHD NORMAL BUILD)	PARK/NEUTRAL POSITION SWITCH SENSE (TRS T41) (A/T), CLUTCH INTERLOCK SWITCH SIG
76	T41 20BK/WT (M/T A/T EARLY BUILD)	CLUTCH INTERLOCK SWITCH SIGNAL, PARK/NEUTRAL POSITION SWITCH SENSE (TRS T41)
76	T41 20BK/WT (RHD NORMAL BUILD)	CLUTCH INTERLOCK SWITCH SIGNAL (M/T), PARK/NEUTRAL POSITION SWITCH SENSE (A/T)
77	K106 20WT/DG	LEAK DETECTION PUMP SOLENOID CONTROL
78	-	-
79	-	-
80	V35 20LG/RD (SPEED CONTROL)	SPEED CONTROL VENT SOLENOID CONTROL

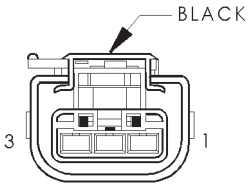

RADIATOR FAN MOTOR

RADIATOR FAN MOTOR - BLACK 3 WAY

CAV	CIRCUIT	FUNCTION
1	C23 12DG	LOW SPEED RADIATOR FAN REALY OUTPUT
2	Z1 12BK	GROUND
3	C25 12YL	HIGH SPEED RADIATOR FAN RELAY OUTPUT

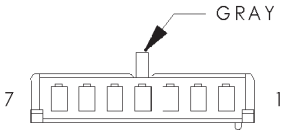

RADIO C1

RADIO C1 - GRAY 7 WAY

CAV	CIRCUIT	FUNCTION
1	-	-
2	X55 18BR/DB (NORMAL BUILD)	LEFT FRONT SPEAKER (-)
2	X55 18RD/BR (EARLY BUILD)	LEFT FRONT SPEAKER (-)
3	X56 18DB/BR (EARLY BUILD)	RIGHT FRONT SPEAKER (-)
3	X56 18DB/RD (NORMAL BUILD)	RIGHT FRONT SPEAKER (-)
4	L7 18BK/YL	HEADLAMP SWITCH OUTPUT
5	E2 20OR	PANEL LAMPS DRIVER
6	X12 18RD/WT	FUSED IGNITION SWITCH OUTPUT (RUN-ACC)
7	M1 20PK	FUSED B(+)

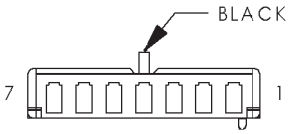

RADIO C2

RADIO C2 - BLACK 7 WAY

CAV	CIRCUIT	FUNCTION
1	-	-
2	X51 18BR/YL	LEFT REAR SPEAKER (+)
3	X52 18DB/WT	RIGHT REAR SPEAKER (+)
4	X53 18DG (EARLY BUILD)	LEFT FRONT SPEAKER (+)
4	X53 18DG/VT (NORMAL BUILD)	LEFT FRONT SPEAKER (+)
5	X54 18VT/DG (EARLY BUILD)	RIGHT FRONT SPEAKER (+)
5	X54 18VT (NORMAL BUILD)	RIGHT FRONT SPEAKER (+)
6	X57 18BR/LB	LEFT FRONT SPEAKER (-)
7	X58 18DB/BK	RIGHT REAR SPEAKER (-)

RADIO C3

RADIO C3 - 2 WAY

CAV	CIRCUIT	FUNCTION
1	D25 D20VT/YL	PCI BUS
2	-	-

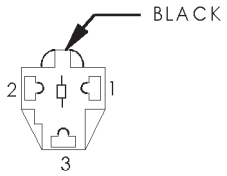

REAR POWER OUTLET

REAR POWER OUTLET - BLACK 3 WAY

CAV	CIRCUIT	FUNCTION
1	F30 16RD	FUSED IGNITION SWITCH OUTPUT (RUN-ACC)
2	-	-
3	Z1 16BK	GROUND

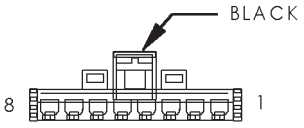

REAR POWER WINDOW SWITCH (EARLY BUILD)

REAR POWER WINDOW SWITCH (EARLY BUILD) - BLACK 8 WAY

CAV	CIRCUIT	FUNCTION
1	Q14 14GY	RIGHT REAR WINDOW DRIVER (UP)
2	Q24 14DG	RIGHT REAR WINDOW DRIVER (DOWN)
3	Q1 14YL	WINDOW SWITCH SUPPLY
4	Q1 14YL	WINDOW SWITCH SUPPLY
5	-	-
6	Q23 14RD/WT	LEFT REAR WINDOW DRIVER (DOWN)
7	Q13 14DB/WT	LEFT REAR WINDOW DRIVER (UP)
8	Z1 14BK	GROUND

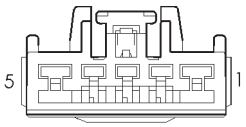

REAR WINDOW DEFOGGER SWITCH

REAR WINDOW DEFOGGER SWITCH - 5 WAY

CAV	CIRCUIT	FUNCTION
1	A4 12BK/PK	FUSED B(+)
2	F20 20WT	FUSED IGNITION SWITCH OUTPUT (RUN)
3	Z1 20BK	GROUND
4	E2 20OR	PANEL LAMPS DRIVER
5	C15 12BK/WT	REAR WINDOW DEFOGGER RELAY OUTPUT

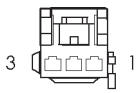

REAR WIPER MOTOR

REAR WIPER MOTOR - 3 WAY

CAV	CIRCUIT	FUNCTION
1	Z1 18BK	GROUND
2	F13 18DB (EARLY BUILD)	FUSED IGNITION SWITCH OUTPUT (RUN-ACC)
2	V23 18BR/PK (NORMAL BUILD)	FUSED IGNITION SWITCH OUTPUT (RUN-ACC)
3	V13 18BR/LG	REAR WIPER MOTOR CONTROL

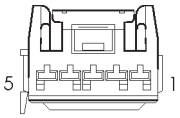

REAR WIPER SWITCH

REAR WIPER SWITCH - 5 WAY

CAV	CIRCUIT	FUNCTION
1	V20 18BK/WT	REAR WASHER MOTOR CONTROL
2	E2 20OR	PANEL LAMPS DRIVER
3	Z1 18BK	GROUND
4	F13 18DB (EARLY BUILD)	FUSED IGNITION SWITCH OUTPUT (RUN-ACC)
4	V23 18DB (NORMAL BUILD)	FUSED IGNITION SWITCH OUTPUT (RUN-ACC)
5	V13 18BR/LG	REAR WIPER MOTOR CONTROL

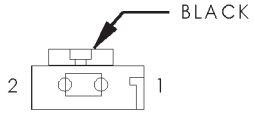

REMOTE KEYLESS ENTRY ANTENNA (JAPAN) (NORMAL BUILD)

REMOTE KEYLESS ENTRY ANTENNA (JAPAN) (NORMAL BUILD) - BLACK 2 WAY

CAV	CIRCUIT	FUNCTION
1	X161 20WT	ANTENNA COAX GROUND
2	X164 20WT	ANTENNA COAX CENTER

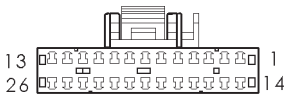

REMOTE KEYLESS ENTRY MODULE

REMOTE KEYLESS ENTRY MODULE - 26 WAY

CAV	CIRCUIT	FUNCTION
1	L4 16VT/WT (EXCEPT BUILT-UP-EX-PORT NORMAL BUILD)	DIMMER SWITCH LOW BEAM OUTPUT
1	L4 16VT/WT (EARLY BUILD)	DIMMER SWITCH LOW BEAM OUTPUT
1	L63 18DG/RD (BUILT-UP-EXPORT NORMAL BUILD)	DIMMER SWITCH LOW BEAM OUTPUT
2	L7 18BK/YL (EARLY BUILD)	HEADLAMP SWITCH OUTPUT
2	L7 18BK/YL (EXCEPT BUILT-UP-EX-PORT NORMAL BUILD)	HEADLAMP SWITCH OUTPUT
2	L62 18BR/RD (BUILT-UP-EXPORT NORMAL BUILD)	HEADLAMP SWITCH OUTPUT
3	F35 18RD	FUSED B(+)
4	P35 18OR/VT (RHD NORMAL BUILD)	DOOR LOCK DRIVER
4	P35 18OR/BK (EARLY BUILD)	DOOR LOCK DRIVER
4	P35 18OR/BK (LHD NORMAL BUILD)	DOOR LOCK DRIVER
5	P34 18PK/BK	DRIVER DOOR UNLOCK DRIVER
6	P36 18PK/VT (RHD)	DOOR UNLOCK DRIVER
6	P36 18PK/BK (LHD)	DOOR UNLOCK DRIVER
7	M9 20DB/OR	PASSENGER DOOR AJAR/RKE SENSE
8	Z1 18BK	GROUND
9	F9 20RD/BK	FUSED B(+)
10	P97 20WT/DG	DRIVER DOOR SWITCH MUX
11	P96 20WT/DG (RHD NORMAL BUILD)	PASSENGER DOOR SWITCH MUX
11	P96 20DG (LHD NORMAL BUILD)	PASSENGER DOOR SWITCH MUX
11	P96 20DG (EARLY BUILD)	PASSENGER DOOR SWITCH MUX
12	Z2 20BK/LG	GROUND
13	X161 20WT (JAPAN)	ANTENNA COAX GROUND
14	G78 20TN/BK	LIFTGATE AJAR SWITCH SENSE
15	X5 20LB/RD	SIREN CONTROL
16	P33 18OR/BK	DRIVER DOOR LOCK DRIVER
17	G69 20BK/OR	VTSS INDICATOR DRIVER
18	X3 20BK/RD	HORN RELAY CONTROL
19	D25 20VT/YL	PCI BUS
20	G120 20WT/LB (NORMAL BUILD)	INTRUSION SENSOR SIGNAL
21	-	-
22	G5 20DB/BK	FUSED IGNITION SWITCH OUTPUT (RUN-START)
23	G70 20BR/TN	HOOD AJAR SWITCH SENSE
24	-	-
25	G74 20TN/RD (RHD)	RIGHT FRONT DOOR AJAR SWITCH SENSE
25	G75 20TN (LHD)	LEFT FRONT DOOR AJAR SWITCH SENSE
26	X164 20WT (JAPAN NORMAL BUILD)	ANTENNA COAX CENTER
26	X161 20WT (JAPAN EARLY BUILD)	ANTENNA COAX CENTER

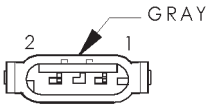

RIGHT BACK-UP LAMP

RIGHT BACK-UP LAMP - GRAY 2 WAY

CAV	CIRCUIT	FUNCTION
1	L1 18VT/BK	BACK-UP LAMP FEED
2	Z1 18BK	GROUND

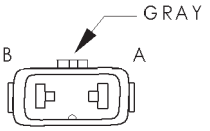

RIGHT FOG LAMP

RIGHT FOG LAMP - GRAY 2 WAY

CAV	CIRCUIT	FUNCTION
A	L39 18LB	FOG LAMP SWITCH OUTPUT
B	Z1 18BK	GROUND

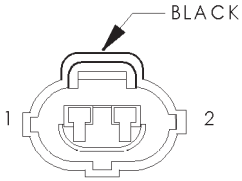

RIGHT FRONT DOOR AJAR SWITCH (BASE) (NORMAL BUILD)

RIGHT FRONT DOOR AJAR SWITCH (BASE) (NORMAL BUILD) - BLACK 2 WAY

CAV	CIRCUIT	FUNCTION
1	G74 18TN/DB	RIGHT FRONT DOOR AJAR SWITCH SENSE
2	Z1 18BK	GROUND

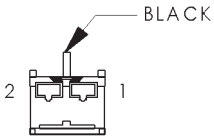

RIGHT FRONT DOOR SPEAKER

RIGHT FRONT DOOR SPEAKER - BLACK 2 WAY

CAV	CIRCUIT	FUNCTION
1	X54 18DG (EARLY BUILD)	RIGHT FRONT SPEAKER (-)
1	X56 18BR/DB (NORMAL BUILD)	RIGHT FRONT SPEAKER (-)
2	X56 18BR/RD (EARLY BUILD)	RIGHT FRONT SPEAKER (+)
2	X54 18DG/VT (NORMAL BUILD)	RIGHT FRONT SPEAKER (+)

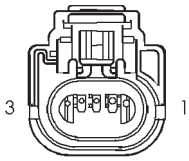

RIGHT FRONT PARK/ TURN SIGNAL LAMP

RIGHT FRONT PARK/TURN SIGNAL LAMP - 3 WAY

CAV	CIRCUIT	FUNCTION
1	Z1 20BK (RHD EARLY BUILD)	GROUND
1	Z1 18BK (LHD EARLY BUILD)	GROUND
1	Z1 18BK (NORMAL BUILD)	GROUND
2	L7 18BK/YL (EXCEPT BUILT-UP-EX-PORT)	HEADLAMP SWITCH OUTPUT
3	L160 18TN/RD	RIGHT FRONT TURN LAMP FEED

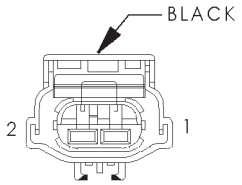

RIGHT FRONT POWER WINDOW MOTOR

RIGHT FRONT POWER WINDOW MOTOR - BLACK 2 WAY

CAV	CIRCUIT	FUNCTION
1	Q22 14WT	RIGHT FRONT WINDOW DRIVER DOWN
2	Q12 14LB	RIGHT FRONT WINDOW DRIVER UP

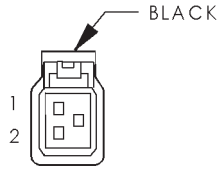

RIGHT FRONT SIDE MARKER (BUILT-UP-EXPORT)

RIGHT FRONT SIDE MARKER (BUILT-UP-EXPORT) - BLACK 2 WAY

CAV	CIRCUIT	FUNCTION
1	L60 18TN	RIGHT TURN SIGNAL
2	Z1 18BK	GROUND

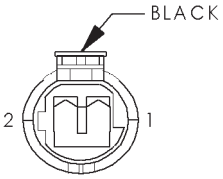

RIGHT FRONT WHEEL SPEED SENSOR

RIGHT FRONT WHEEL SPEED SENSOR - BLACK 2 WAY

CAV	CIRCUIT	FUNCTION
1	B7 18WT	RIGHT FRONT WHEEL SPEED SENSO 12 VOLT SIG-NAL
2	B6 18WT/DB	RIGHT FRONT WHEEL SPEED SENSOR SIGNAL

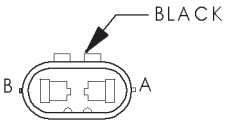

RIGHT HIGH BEAM HEADLAMP

RIGHT HIGH BEAM HEADLAMP - BLACK 2 WAY

CAV	CIRCUIT	FUNCTION
A	L3 16RD/OR	DIMMER SWITCH HIGH BEAM OUTPUT
B	Z1 16BK	GROUND

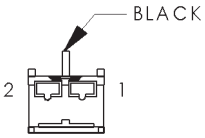

RIGHT INSTRUMENT PANEL SPEAKER

RIGHT INSTRUMENT PANEL SPEAKER - BLACK 2 WAY

CAV	CIRCUIT	FUNCTION
1	X54 18VT/DG	RIGHT INSTRUMENT PANEL SPEAKER (+)
2	X56 18DB/RD	RIGHT INSTRUMENT PANEL SPEAKER (-)

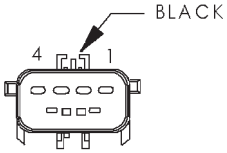

RIGHT
LAVALIER MODULE
(BUILT-UP-EXPORT)

RIGHT LAVALIER MODULE (BUILT-UP-EXPORT) - BLACK 4 WAY

CAV	CIRCUIT	FUNCTION
1	L7 18BK/YL	HEADLAMP SWITCH OUTPUT
2	Z1 20BK (RHD)	GROUND
2	Z1 18BK (LHD)	GROUND
3	L13 20BR/YL	HEADLAMP ADJUST SIGNAL
4	L43 18VT	FUSED LEFT LOW BEAM OUTPUT

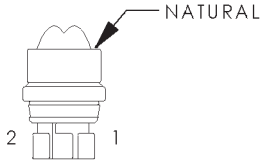

RIGHT
LICENSE LAMP
(BUILT-UP-EXPORT)

RIGHT LICENSE LAMP (BUILT-UP-EXPORT) - NATURAL 2 WAY

CAV	CIRCUIT	FUNCTION
1	L7 18BK/YL	HEADLAMP SWITCH OUTPUT
2	Z1 18BK	GROUND

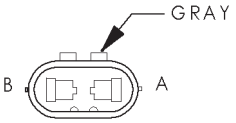

RIGHT
LOW BEAM
HEADLAMP

RIGHT LOW BEAM HEADLAMP - GRAY 2 WAY

CAV	CIRCUIT	FUNCTION
A	L44 16VT/RD	FUSED RIGHT LOW BEAM OUTPUT
B	Z1 16BK	GROUND

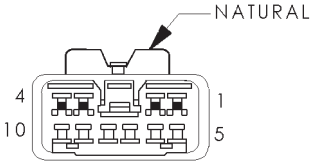

RIGHT
POWER MIRROR

RIGHT POWER MIRROR - NATURAL 10 WAY

CAV	CIRCUIT	FUNCTION
1	Z1 20BK	GROUND
2	P76 20YL/PK (RHD)	LEFT/RIGHT MIRROR RIGHT/DOWN MOVEMENT
2	P70 20YL/PK (LHD)	RIGHT MIRROR RIGHT/DOWN MOVEMENT
3	C16 20LB/YL	FUSED REAR WINDOW DEFOGGER SWITCH OUTPUT
4	P72 20YL/BK (EARLY BUILD)	RIGHT MIRROR UP MOVEMENT
4	P72 20BR/YL (NORMAL BUILD)	RIGHT MIRROR UP MOVEMENT
5	P74 20DB/WT	RIGHT MIRROR LEFT MOVEMENT
6	P159 20DG/WT (RHD)	MIRROR UNFOLD
7	-	-
8	-	-
9	-	-
10	P160 20LB/BK (RHD)	MIRROR FOLD

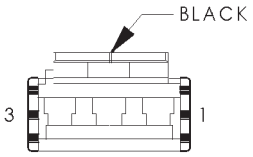

RIGHT REAR DOOR POWER LOCK MOTOR

RIGHT REAR DOOR POWER LOCK MOTOR - BLACK 3 WAY

CAV	CIRCUIT	FUNCTION
1	P35 18OR/VT	DOOR LOCK DRIVER
2	-	-
3	P36 18PK/VT	DOOR UNLOCK DRIVER

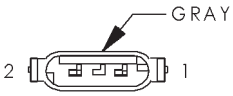

RIGHT REAR FOG LAMP (RHD)

RIGHT REAR FOG LAMP (RHD) - GRAY 2 WAY

CAV	CIRCUIT	FUNCTION
1	L38 18BR/WT	REAR FOG LAMP SWITCH OUTPUT
2	Z1 18BK	GROUND

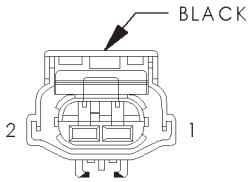

RIGHT REAR POWER WINDOW MOTOR

RIGHT REAR POWER WINDOW MOTOR - BLACK 2 WAY

CAV	CIRCUIT	FUNCTION
1	Q24 14RD/WT (EARLY BUILD)	RIGHT REAR WINDOW DRIVER (DOWN)
1	Q24 14RD/DG (NORMAL BUILD)	RIGHT REAR WINDOW DRIVER (DOWN)
2	Q14 14DB/GY	RIGHT REAR WINDOW DRIVER (UP)

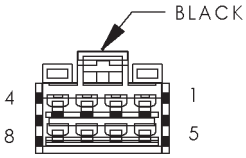

RIGHT REAR POWER WINDOW SWITCH (NORMAL BUILD)

RIGHT REAR POWER WINDOW SWITCH (NORMAL BUILD) - BLACK 8 WAY

CAV	CIRCUIT	FUNCTION
1	-	-
2	Q18 14GY/BK	MASTER RIGHT REAR WINDOW DRIVER (UP)
3	Q28 14DG/WT	MASTER RIGHT REAR WINDOW DRIVER (DOWN)
4	Q1 14YL	WINDOW SWITCH SUPPLY
5	Q14 14GY	RIGHT REAR WINDOW DRIVER (UP)
6	Q1 14YL	WINDOW SWITCH SUPPLY
7	Z1 14BK	GROUND
8	Q24 14DG	RIGHT REAR WINDOW DRIVER (DOWN)

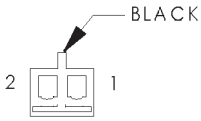

RIGHT REAR SPEAKER

RIGHT REAR SPEAKER - BLACK 2 WAY

CAV	CIRCUIT	FUNCTION
1	X58 18DB/BK	RIGHT REAR SPEAKER (-)
2	X52 18DB/WT	RIGHT REAR SPEAKER (+)

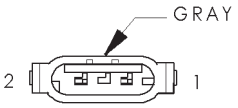

RIGHT REAR TURN SIGNAL LAMP

RIGHT REAR TURN SIGNAL LAMP - GRAY 2 WAY

CAV	CIRCUIT	FUNCTION
1	L62 18BR/RD	RIGHT REAR TURN SIGNAL
2	Z1 18BK	GROUND

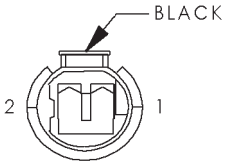

RIGHT REAR WHEEL SPEED SENSOR

RIGHT REAR WHEEL SPEED SENSOR - BLACK 2 WAY

CAV	CIRCUIT	FUNCTION
1	B2 20YL	RIGHT REAR WHEEL SPEED SENSOR 12 VOLT SUPPLY
2	B1 20YL/DB	RIGHT REAR WHEEL SPEED SENSOR SIGNAL

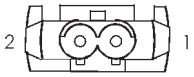

RIGHT SEAT AIRBAG

RIGHT SEAT AIRBAG - 2 WAY

CAV	CIRCUIT	FUNCTION
1	R32 18OR	RIGHT SEAT SQUIB LINE 2
2	R34 18WT	RIGHT SEAT SQUIB LINE 1

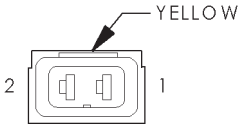

RIGHT SEAT BELT TENSIONER

RIGHT SEAT BELT TENSIONER - YELLOW 2 WAY

CAV	CIRCUIT	FUNCTION
1	R54 18LB/YL	RIGHT SEAT BELT TENSIONER LINE 2
2	R56 18LB/DG	RIGHT SEAT BETL TENSIONER LINE 1

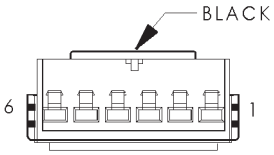

RIGHT SIDE IMPACT AIRBAG CONTROL MODULE (FULL OPTIONS)

RIGHT SIDE IMPACT AIRBAG CONTROL MODULE (FULL OPTIONS) - BLACK 6 WAY

CAV	CIRCUIT	FUNCTION
1	F15 20DG/WT	FUSED IGNTION SWITCH OUTPUT (RUN-START)
2	D25 20VT/YL	PCI BUS
3	R34 20LB/WT	RIGHT SEAT SQUIB LINE 1
4	R32 20LB/OR	RIGHT SEAT SQUIB LINE 2
5	-	-
6	Z6 20BK/PK (EARLY BUILD)	GROUND
6	Z135 20BK/PK (NORMAL BUILD)	GROUND

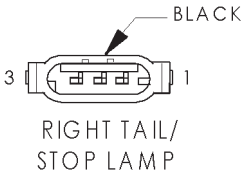

RIGHT TAIL/STOP LAMP - BLACK 3 WAY

CAV	CIRCUIT	FUNCTION
1	L50 18WT/TN	BRAKE LAMP SWITCH OUTPUT
2	L7 18BK/YL	HEADLAMP SWITCH OUTPUT
3	Z1 18BK	GROUND

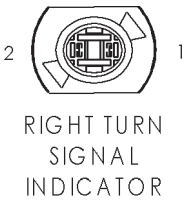

RIGHT TURN SIGNAL INDICATOR - 2 WAY

CAV	CIRCUIT	FUNCTION
1	L60 20TN	RIGHT TURN SIGNAL
2	Z1 20BK	GROUND

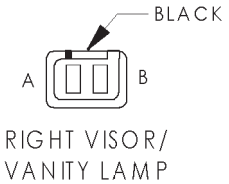

RIGHT VISOR/VANITY LAMP - BLACK 2 WAY

CAV	CIRCUIT	FUNCTION
A	M1 20PK	FUSED B(+)
B	Z1 20BK	GROUND

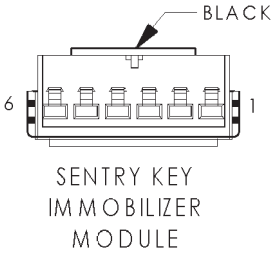

SENTRY KEY IMMOBILIZER MODULE - BLACK 6 WAY

CAV	CIRCUIT	FUNCTION
1	-	-
2	D25 20VT/YL	PCI BUS
3	-	-
4	G5 20DB/BK	FUSED IGNITION SWITCH OUTPUT (RUN-START)
5	Z2 20BK/LG	GROUND
6	M1 20PK	FUSED B(+)

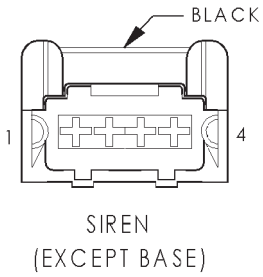

SIREN (EXCEPT BASE) - BLACK 4 WAY

CAV	CIRCUIT	FUNCTION
1	X5 20LB/RD	SIREN CONTROL
2	X5 20LB/RD	SIREN CONTROL
3	Z1 20BK	GROUND
4	M1 20PK	FUSED B(+)

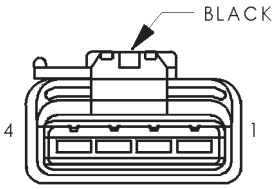

SPEED CONTROL SERVO

SPEED CONTROL SERVO - BLACK 4 WAY

CAV	CIRCUIT	FUNCTION
1	V36 20TN/RD	SPEED CONTROL VACUUM SOLENOID CONTROL
2	V35 20LG/RD	SPEED CONTROL VENT SOLENOID CONTROL
3	V40 20DB/RD	SPEED CONTROL BRAKE LAMP SWITCH OUTPUT
4	Z1 20BK	GROUND

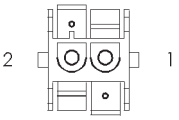

SUNROOF MOTOR

SUNROOF MOTOR - 2 WAY

CAV	CIRCUIT	FUNCTION
1	L6 14DG	MOTOR TILT UP FEED
2	L7 14DB	MOTOR TILT DOWN FEED

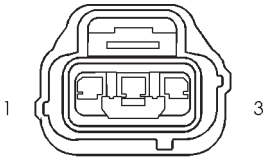

THROTTLE POSITION SENSOR

THROTTLE POSITION SENSOR - 3 WAY

CAV	CIRCUIT	FUNCTION
1	K6 20VT/WT (EARLY BUILD)	5V SUPPLY
1	K6 18VT/WT (NORMAL BUILD)	5V SUPPLY
2	K22 20OR/DB (EARLY BUILD)	THROTTLE POSITION SENSOR SIGNAL
2	K22 18OR/DB (NORMAL BUILD)	THROTTLE POSITION SENSOR SIGNAL
3	K4 20BK/LB (EARLY BUILD)	SENSOR GROUND
3	K4 18BK/LB (NORMAL BUILD)	SENSOR GROUND

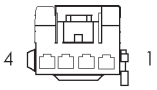

TRACTION CONTROL SWITCH

TRACTION CONTROL SWITCH - 4 WAY

CAV	CIRCUIT	FUNCTION
1	-	-
2	B27 18RD/YL	TRACTION CONTROL SWITCH SENSE
3	Z1 20BK	GROUND
4	E2 20OR	PANEL LAMPS DRIVER

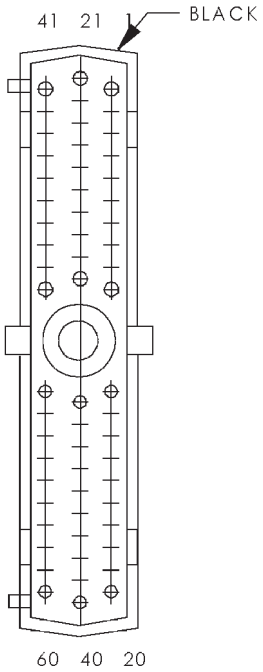

TRANSMISSION CONTROL MODULE (A/T)

TRANSMISSION CONTROL MODULE (A/T) - BLACK 60 WAY

CAV	CIRCUIT	FUNCTION
1	T1 20LG/BK	TRS T1 SENSE
2	-	-
3	T3 20VT	TRS T3 SENSE
4	-	-
5	-	-
6	K24 20GY/BK	CRANKSHAFT POSITION SENSOR SIGNAL
7	D21 20PK	SCI TRANSMIT
8	A41 16YL	FUSED IGNITION SWITCH OUTPUT (START)
9	T9 18OR/BK	OVERDRIVE PRESSURE SWITCH SENSE
10	T10 20YL/DG	TORQUE MANAGEMENT REQUEST SENSE
11	F18 20LG/BK	FUSED IGNITION SWITCH OUTPUT (RUN-START)
12	K22 20OR/DB	THROTTLE POSITION SENSOR SIGNAL
13	T13 20DB/BK	SPEED SENSOR GROUND
14	T14 20LG/WT	OUTPUT SPEED SENSOR SIGNAL
15	T15 20LG	TRANSMISSION CONTROL RELAY CONTROL
16	T16 16RD	TRANSMISSION CONTROL RELAY OUTPUT
17	T16 16RD	TRANSMISSION CONTROL RELAY OUTPUT
18	-	-
19	T19 18WT	2-4 SOLENOID CONTROL
20	T20 18LB	LOW/REVERSE SOLENOID CONTROL
21	-	-
22	-	-
23	-	-
24	-	-
25	-	-
26	-	-
27	-	-
28	-	-
29	-	-
30	-	-
31	-	-
32	-	-
33	-	-
34	-	-
35	-	-
36	-	-
37	-	-
38	-	-
39	-	-
40	-	-
41	T41 20BK/WT (RHD NORMAL BUILD)	PARK/NEUTRAL POSITION SWITCH SENSE (TRS T41)
41	T41 20BK/WT (EARLY BUILD)	PARK/NEUTRAL POSITION SWITCH SENSE (TRS T41)
41	T41 20YL/RD (LHD NORMAL BUILD)	PARK/NEUTRAL POSITION SWITCH SENSE (TRS T41)
42	T42 20VT/WT	TRS T42 SENSE
43	D25 20VT/YL	PCI BUS
44	-	-
45	-	-
46	D6 20PK/LB	SCI RECEIVE (A/T)
47	T47 18YL/BK	2-4 PRESSURE SWITCH SENSE
48	-	-
49	-	-
50	T50 18DG	LOW/REVERSE PRESSURE SWITCH SENSE
51	K4 20BK/LB	SENSOR GROUND

TRANSMISSION CONTROL MODULE (A/T) - BLACK 60 WAY

CAV	CIRCUIT	FUNCTION
52	T52 20RD/BK	INPUT SPEED SENSOR SIGNAL
53	Z14 16BK/YL	GROUND
54	T54 20VT/PK (LHD NORMAL BUILD)	TRANSMISSION TEMPERATURE SENSOR SIGNAL
54	T54 18VT/PK (RHD NORMAL BUILD)	TRANSMISSION TEMPERATURE SENSOR SIGNAL
54	T54 20VT/PK (EARLY BUILD)	TRANSMISSION TEMPERATURE SENSOR SIGNAL
55	-	-
56	A30 16RD/WT	FUSED B(+)
57	Z13 16BK/RD (LHD EARLY BUILD)	GROUND
57	Z13 16BK/TN (RHD EARLY BUILD)	GROUND
57	Z13 16BK/RD (NORMAL BUILD)	GROUND
58	G7 20WT/OR	VEHICLE SPEED SENSOR SIGNAL
59	T59 18PK	UNDERDRIVE SOLENOID CONTROL
60	T60 18BR	OVERDRIVE SOLENOID CONTROL

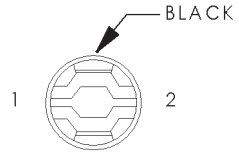

TRANSMISSION RANGE INDICATOR ILLUMINATION (PRNDL)

TRANSMISSION RANGE INDICATOR ILLUMINATION (PRNDL) - BLACK 2 WAY

CAV	CIRCUIT	FUNCTION
1	E2 20OR	PANEL LAMPS DRIVER
2	Z1 20BK	GROUND

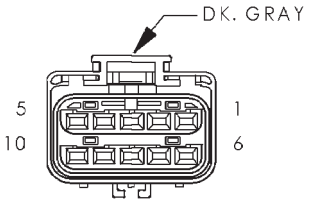

TRANSMISSION RANGE SENSOR (A/T)

TRANSMISSION RANGE SENSOR (A/T) - DK. GRAY 10 WAY

CAV	CIRCUIT	FUNCTION
1	F20 18WT	FUSED IGNITION SWITCH OUTPUT (RUN)
2	-	-
3	T13 20DB/BK	SPEED SENSOR GROUND
4	T54 18VT/PK	TRANSMISSION TEMPERATURE SENSOR SIGNAL
5	T41 20BK/WT (EARLY BUILD)	PARK/NEUTRAL POSITION SWITCH SENSE (TRS T41)
6	L1 18VT/BK	BACK-UP LAMP FEED
7	T1 20LG/BK	TRS T1SENSE
8	T3 20VT	TRS T3 SENSE
9	T42 20VT/WT	TRS T42 SENSE
10	T41 20BK/WT (NORMAL BUILD)	PARK/NEUTRAL POSITION SWITCH SENSE (TRS T41)

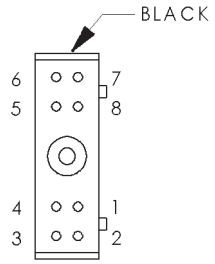

TRANSMISSION SOLENOID/PRESSURE SWITCH ASSEMBLY

TRANSMISSION SOLENOID/PRESSURE SWITCH ASSEMBLY - BLACK 8 WAY

CAV	CIRCUIT	FUNCTION
1	T47 18YL/BK	2-4 PRESSURE SWITCH SENSE
2	T50 18DG	LOW/REVERSE PRESSURE SWITCH SENSE
3	T9 18OR/BK	OVERDRIVE PRESSURE SWITCH SENSE
4	T16 16RD	TRANSMISSION CONTROL RELAY OUTPUT
5	T59 18PK	UNDERDRIVE SOLENOID CONTROL
6	T60 18BR	OVERDRIVE SOLENOID CONTROL
7	T20 18LB	LOW/REVERSE SOLENOID CONTROL
8	T19 18WT	2-4 SOLENOID CONTROL

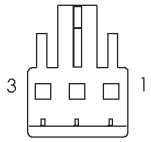

VEHICLE SPEED CONTROL SWITCH

VEHICLE SPEED CONTROL SWITCH - 3 WAY

CAV	CIRCUIT	FUNCTION
1	Z2 22BK/LG (EARLY BUILD)	GROUND
1	V131 20RD/LG (NORMAL BUILD)	SPEED CONTROL SWITCH SIGNAL
2	-	-
3	V37 22RD/LG (EARLY BUILD)	VEHICLE SPEED SENSOR SWITCH SIGNAL
3	Z123 20BK/LG (NORMAL BUILD)	GROUND

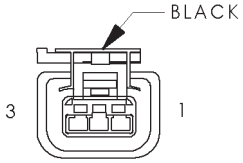

VEHICLE SPEED SENSOR (M/T)

VEHICLE SPEED SENSOR (M/T) - BLACK 3 WAY

CAV	CIRCUIT	FUNCTION
1	K7 20OR	8V SUPPLY
2	K4 20BK/LB	SENSOR GROUND
3	G7 20WT/OR	VEHICLE SPEED SENSOR SIGNAL

2001 PT CRUISER

8W-90 CONNECTOR/GROUND LOCATIONS

TABLE OF CONTENTS

page

CONNECTOR/GROUND LOCATIONS
DESCRIPTION 1

CONNECTOR/GROUND LOCATIONS

DESCRIPTION

This section provides illustrations identifying connector and ground locations in the vehicle. A connector and ground index is provided. Use the wiring diagrams in each section for connector and ground identification. Refer to the index for the proper figure number. For items that are not shown in this section N/S is placed in the Fig. column.

Connector Name/Number	Color	Location	Fig.
A/C Compressor Clutch	BK	Lower Front of Engine	3
A/C - Heater Control Switch	GY	Center of Instrument Panel	19
A/C Low Pressure Switch	BK	Right Rear of Engine Compartment	5, 7, 8
A/C Pressure Transducer	BK	Lower Front of Engine	3
Ambient Temperature Sensor	BK	Left Front Wheel Housing	5
Ash Receiver Lamp		Top of Ash Tray	12
Back-Up Lamp Switch	GY	Front of Engine Compartment on Manual Transmission	3
Blower Motor	BK	Right Rear of Instrument Panel	20
Blower Motor Resistor Block	BK	Right Side of Cowl Panel	9, 10
Brake Lamp Switch	GY	Left Side of Brake Pedal	10
Brake Transmission Shift Interlock Solenoid	WT	Below Steering Column	14
Brake Warning Indicator Switch	BK	Left Rear of Engine Compartment	5
C101	BK	Front Left Side of Engine Compartment	3, 5
C102	LT GY	Front Left Side of Engine Compartment	3, 5
C103		Front Side of Engine	3
C104	DK GY	Front Left Side of Engine Compartment	3
C105		Left Side of Instrument Panel	10, 21
C106		Left Side of Instrument Panel	10, 21
C109	BK	Lower Right Side of Engine Compartment	7
C110	BK	Lower Right Side of Engine Compartment	7
C200	BK	Left Side of Instrument Panel	21
C201	BK	Left Side of Instrument Panel	20
C202		Left Kick Panel	21, 23
C203	GN	Lower Right Kick Panel	20, 22
C204	NAT	Left Side of Instrument Panel	21, 23

CONNECTOR/GROUND LOCATIONS (Continued)

Connector Name/Number	Color	Location	Fig.
C205	NAT	Upper Right Kick Panel	20, 22, 27
C206	BK	Below Driver's Seat	17
C207		Right Side of Instrument Panel	N/S
C208		Left Side of Instrument Panel	13
C209	BK	Right Rear of Instrument Panel	N/S
C210	BK	Below Driver Seat	N/S
C211	BK	Below Driver Seat	N/S
C300	BK	Left B-Pillar	24, 28
C301	BK	Right B-Pillar	25, 28
C302		Top Left of Liftgate	30, 32, 33
C303		Left Rear Quarter	29, 34
C304	BK	At Fuel Tank	N/S
C305	YL	Left Rear of Front Console	23
C306	YL	Left Side of Front Console	22
Camshaft Position Sensor	BK	On Engine Left Side of Engine Compartment	4
Cargo Lamp	BK	Cargo Area	26
Center High Mounted Stop Lamp	BK	Top of Liftgate	32, 33
Center Stack Lamp		Bottom Center of Instrument Panel	19
Cigar Lighter	BK	Bottom Center of Instrument Panel	17
Clockspring		Bottom of Steering Wheel	14
Clutch Pedal Position Switch	BK	Left Side of Steering Column	10
Controller Antilock Brake		Left Side Engine Compartment	5
Crankshaft Position Sensor	BK	Lower Right Side of Engine	4
Data Link Connector	BK	Left Side of Instrument Panel	10
Dome Lamp	BK	Center of Headliner	N/S
Dome Lamp/Intrusion Sensor		Center of Headliner	N/S
Driver Airbag Module	YL	Front of Steering Wheel	N/S
Driver Cylinder Lock Switch		Driver Door	N/S
Driver Door Power Lock Motor/Ajar Switch	BK	Driver Door	N/S
Driver Door Lock Switch	BK	Driver Door	N/S
Driver Heated Seat Cushion		Driver Seat	N/S
Driver Seat Belt Switch	BK	Lower Left B-Pillar	24
EGR Solenoid	BK	Right Rear of Engine	4
Engine Coolant Temperature Sensor		Side of Radiator	N/S
Engine Oil Pressure Switch	LT GN	Right Rear of Engine Compartment	4
Engine Starter Motor		Lower Right Side of Engine	3, 6
EVAP Purge Solenoid	BK	Lower Right Rear of Engine Compartment	5
Front Power Window Switch	NAT	Top Center of Instrument Panel	19
Front Washer Pump Motor	BK	Attached to Washer Reservoir	10
Front Wiper Motor		Center of Cowl Panel	10
Front Wiper/Washer Switch		Part of Multi-Function Switch	14

CONNECTOR/GROUND LOCATIONS (Continued)

Connector Name/Number	Color	Location	Fig.
Fuel Injector No.1	BK	At Injector	N/S
Fuel Injector No.2	BK	At Injector	N/S
Fuel Injector No.3	BK	At Injector	N/S
Fuel Injector No.4	BK	At Injector	N/S
Fuel Pump Module	LT GY	On Fuel Tank	N/S
Fuse Block		Left Bottom of Instrument Panel	14, 21
G100		Left Front Engine Compartment	6
G101		At Battery Tray	6
G102		Left Fender Area	5, 10
G103		Left Fender Area	5, 10
G104		Right Fender Area	7
G105		Left Front Inner Fender	N/S
G200		Center Rear of Instrument Panel	15
G201		Center Rear of Instrument Panel	15, 21
G202		Left Kick Panel	N/S
G203		Center Rear of Instrument Panel	15
G204		Left Kick Panel	20
G300		Left Rear Quarter	29, 30
G301		Right Rear Quarter	26
G302		Upper Left Rear Cargo Area	29
G303		Left B-Pillar	24
G304		Lower Right B-Pillar	25
Generator	BK	Lower Right Side of Engine	4, 6
Headlamp Leveling Switch		Center of Instrument Panel	19
High Note Horn	BK	Left Inner Fender	5
Hood Ajar Switch	BK	Left Rear Engine Compartment	5
Idle Air Control Motor	BK	Top of Engine	4
Ignition Coil	BK	Right Rear of Engine	4
Ignition Switch		Right Side of Steering Column	14
Inlet Air Temperature Sensor	BK	Left Side Engine Compartment on Engine	4
Input Speed Sensor	GY	Front of Engine Compartment on Transmission	3
Instrument Cluster C1	BK	Driver's Side of Instrument Panel	12, 14
Instrument Cluster C2	BK	Driver's Side of Instrument Panel	12, 14
Knock Sensor	BK	Front of Engine Compartment on Engine	3
Leak Detection Pump	BK	Near Fuel Tank Module	N/S
Left Back-Up Lamp	GY	Left Side of Rear Fascia	34
Left Fog Lamp	GY	Lower Left Front Fascia	5
Left Front Door Ajar Switch	BK	Left B-Pillar	24
Left Front Door Speaker	BK	Left Door	N/S
Left Front Park/Turn Signal Lamp	BK	Left Front of Vehicle	2
Left Front Power Window Motor	BK	Left Front Door	N/S

CONNECTOR/GROUND LOCATIONS (Continued)

Connector Name/Number	Color	Location	Fig.
Left Front Side Marker	BK	Left Front Wheel Opening	N/S
Left Front Wheel Speed Sensor	BK	Left Front Wheel Opening	N/S
Left High Beam Headlamp	BK	At Headlamp Assembly	2
Left Instrument Panel Speaker	BK	Left Upper Instrument Panel	N/S
Left Lavalier Module	BK	Left Side of Rear Instrument Panel	N/S
Left Licence Lamp	NAT	Left Side of Rear Fascia	N/S
Left Low Beam Headlamp	GY	At Headlamp Assembly	2
Left Power Mirror	NAT	Left Front Door	N/S
Left Rear Door Ajar Switch		Above Left Rear Wheel Well	29
Left Rear Door Power Lock Motor	BK	Rear of Left Rear Door	N/S
Left Rear Fog Lamp	GY	Left Side of Rear Fascia	N/S
Left Rear Power Window Motor	BK	Left Rear Door	N/S
Left Rear Power Window Switch	LT GY	Rear of Front Center Console	17
Left Rear Speaker	BK	Left C-Pillar	30
Left Rear Turn Signal Lamp	GY	In Rear Lamp Assembly	29, 34
Left Rear Wheel Speed Sensor	BK	Left Rear Wheel Opening	N/S
Left Seat Belt Tensioner	YL	Left B-Pillar	24
Left Side Impact Airbag Control Module	BK	Lower Left B-Pillar	24
Left Tail/Stop Lamp	BK	In Rear Lamp Assembly	29, 34
Left Turn Signal Indicator		Left Top Side of Instrument Panel	12
Left Visor/Vanity Lamp	BK	Left Front Side of Headliner	N/S
License Lamp	NAT	Center of Rear Fascia	34
Liftgate Ajar Switch	BK	Bottom of Liftgate	31
Liftgate Cylinder Lock Switch	LT GY	Inside Liftgate	31
Liftgate Power Lock Motor	BK	Inside Liftgate	31
Low Note Horn	BK	Left Inner Fender	5
Manifold Absolute Pressure Sensor	BK	Top Rear of Engine	4
Map/Reading Lamps	BK	Front Headliner	N/S
Multi-Function Switch	GY	Steering Column	14
Noise Suppressor		Left Side Engine Compartment on Engine	4
Occupant Restraint Controller	YL	Forward of Front Console	17
Output Speed Sensor	GY	Front of Engine Compartment on Transmission	3
Overhead Console Module	BK	Front Center of Headliner	N/S
Oxygen Sensor 1/1 Upstream	GY	Left Side Engine Compartment	4
Oxygen Sensor 1/2 Downstream	BK	Left Side Engine Compartment	4
Parking Brake Switch		Rear of Front Center Console	17
Passenger Airbag	YL	Passenger Side of Instrument Panel	18, 20
Passenger Cylinder Lock Switch		Passenger Door	27
Passenger Door Power Lock Motor/Ajar Switch	BK	Passenger Door	27
Passenger Door Lock Switch	BK	Passenger Door	27

CONNECTOR/GROUND LOCATIONS (Continued)

Connector Name/Number	Color	Location	Fig.
Passenger Heated Seat Cushion		Passenger Seat	N/S
Passenger Heated Seat Module	GN	Passenger Seat	N/S
Passenger Heated Seat Switch		Passenger Seat	N/S
Passenger Seat Belt Switch	BK	Lower Right B-Pillar	25
Power Distribution Center		Left Side of Engine Compartment	5, 6
Power Mirror Switch (LHD)	BK	Left Side of Instrument Panel	21
Power Mirror Switch (RHD)	GY	Right Side of Instrument Panel	N/S
Power Outlet	BK	Top of Front Console	11, 19
Power Seat Motor		Inside Driver Seat	N/S
Power Seat Switch		Below Driver Seat	N/S
Power Steering Pressure Switch	GY	Left Rear Engine Compartment	5
Power Sunroof Module C1		Right Side of Sunroof	16
Power Sunroof Module C2		Sunroof	N/S
Powertrain Control Module C1	GY	Left Side Engine Compartment	4
Powertrain Control Module C2	GY	Left Side Engine Compartment	5
Radiator Fan Motor	BK	Front Center Engine Compartment	5
Radio C1	GY	Center of Instrument Panel	11, 19
Radio C2	BK	Center of Instrument Panel	11, 19
Radio C3		Center of Instrument Panel	11, 19
Rear Power Outlet	BK	Right Rear Cargo Area	26
Rear Window Defogger		Left Rear Liftgate	32
Rear Window Defogger Switch		Lower Center Instrument Panel	11, 19
Rear Wiper Motor		Center of Liftgate	31
Rear Wiper Switch		Lower Center Instrument Panel	11, 19
Remote Keyless Entry Antenna (Japan)	BK	Center of Instrument Panel	N/S
Remote Keyless Entry Module		Upper Center Instrument Panel	11, 15
Right Back-Up Lamp	GY	Right Side of Rear Fascia	34
Right Fog Lamp	GY	Lower Right Front Fascia	1, 5
Right Front Door Ajar Switch	BK	Right B-Pillar	25, 28
Right Front Door Speaker	BK	Right Door	27
Right Front Park/Turn Signal Lamp		Right Front of Vehicle	5
Right Front Power Window Motor		Right Front Door	27
Right Front Side Marker	BK	Right Front Wheel Opening	5
Right Front Wheel Speed Sensor	BK	Right Front Wheel Opening	7
Right High Beam Headlamp	BK	Right Front Headlamp Assembly	5
Right Instrument Panel Speaker	BK	Right Upper Instrument Panel	N/S
Right Lavalier Module	BK	Right Side of Instrument Panel	N/S
Right License Lamp	NAT	Right Side of Rear Fascia	N/S
Right Low Beam Headlamp	GY	Right Front Headlamp Assembly	5
Right Power Mirror	NAT	Right Front Door	27
Right Rear Door Ajar Switch		Right C-Pillar	26

CONNECTOR/GROUND LOCATIONS (Continued)

Connector Name/Number	Color	Location	Fig.
Right Rear Door Power Lock Motor	BK	Right Rear Door	28
Right Rear Fog Lamp	GY	Right Side of Rear Fascia	N/S
Right Rear Power Window Motor	BK	Right Rear Door	28
Right Rear Power Window Switch	BK	Rear of Front Center Console	N/S
Right Rear Speaker	BK	Right Side Shelf Panel	26
Right Rear Turn Signal Lamp	GY	In Rear Lamp Assembly	26
Right Rear Wheel Speed Sensor	BK	Right Rear Wheel Opening	N/S
Right Seat Airbag		Right Seat	N/S
Right Seat Belt Tensioner	YL	Right B-Pillar	25
Right Side Impact Airbag Control Module	BK	Lower Right B-Pillar	25
Right Tail/Stop Lamp	BK	In Rear Lamp Assembly	26
Right Turn Signal Indicator		Right Side of Instrument Panel	12
Right Visor/Vanity Lamp	BK	Right Front Headliner	N/S
Sentry Key Immobilizer Module	BK	Right of Steering Column	14
Siren	BK	Left Front Wheel Opening	5
Speed Control Servo	BK	Right Rear Corner of Engine Compartment	5, 7
Sunroof Motor		Right Side of Sunroof Assembly	N/S
Sunroof Switch	BK	Part of Overhead Console	N/S
Throttle Position Sensor		On Throttle Body	4
Traction Control Switch		Lower Center of Instrument Panel	11, 19
Transmission Control Module	BK	Left Front of Engine Compartment	N/S
Transmission Range Indicator Illumination (PRNDL)	BK	Left Side of Transmission Selection Lever	17
Transmission Range Sensor	DK GY	Front of Engine Compartment on Transmission	3
Transmission Solenoid/Pressure Switch Assembly	BK	Front of Engine Compartment on Transmission	3
Vehicle Speed Control Switch		At Steering Wheel	N/S
Vehicle Speed Sensor	BK	Front of Engine Compartment on Transmission	N/S

CONNECTOR/GROUND LOCATIONS (Continued)

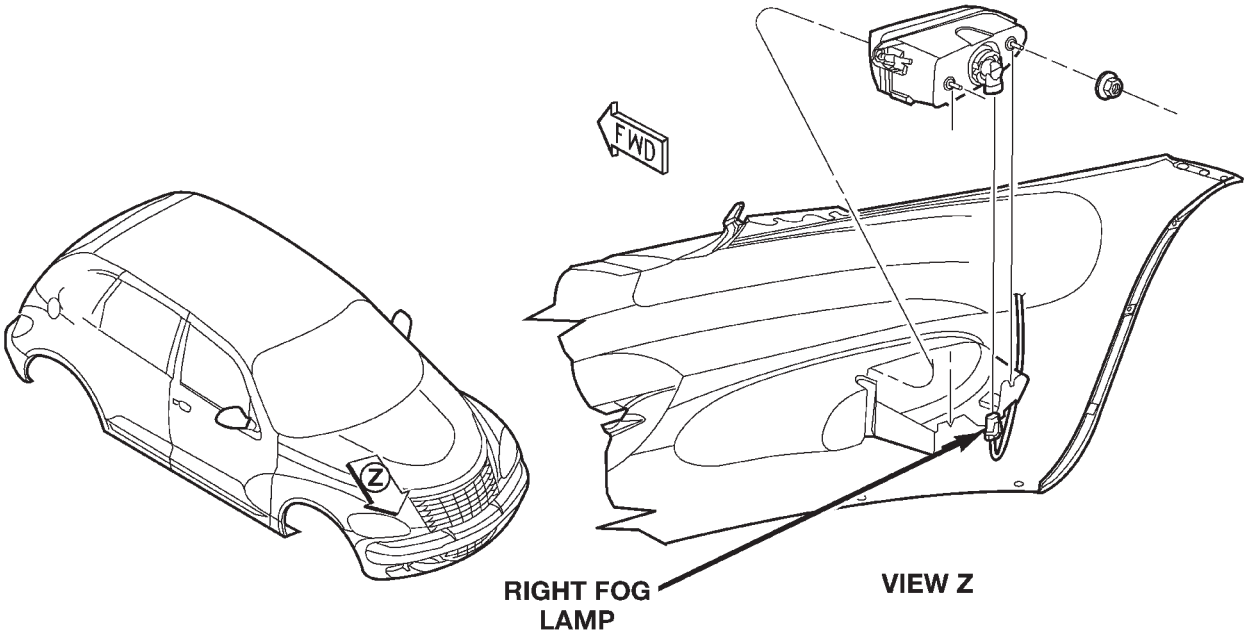

80c07004

Fig. 1 RIGHT FOG LAMP

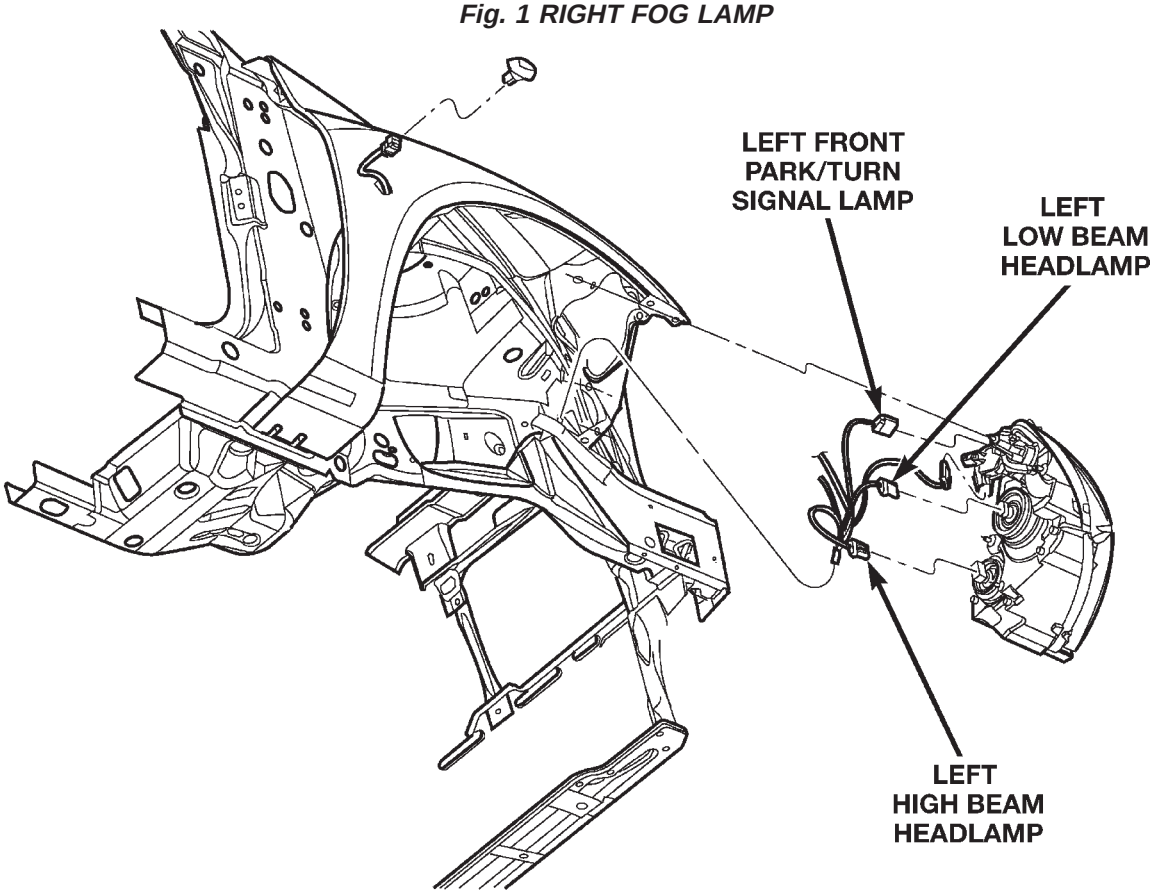

80c07005

Fig. 2 LEFT FRONT LAMPS

CONNECTOR/GROUND LOCATIONS (Continued)

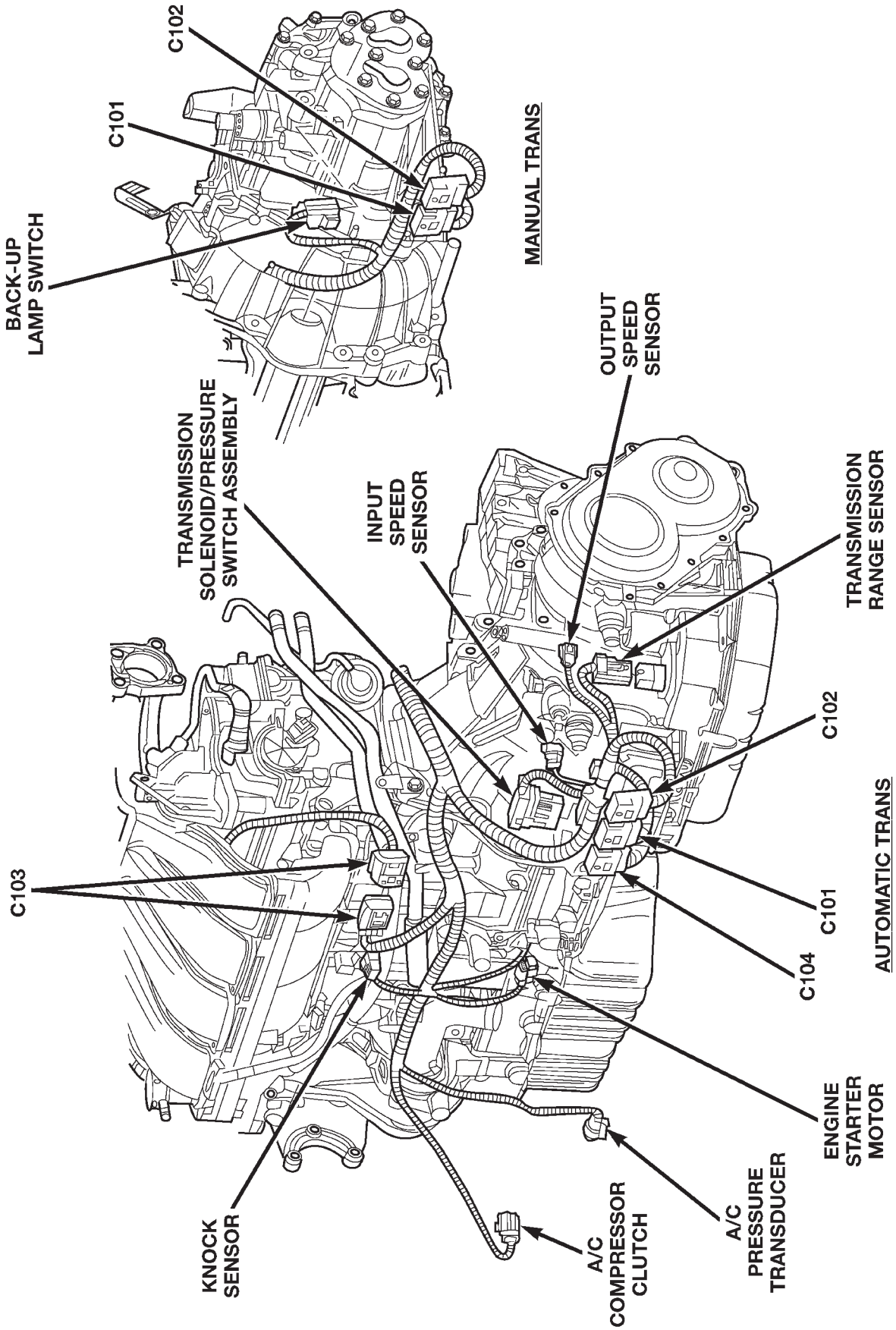

Fig. 3 ENGINE TRANSMISSION ASSEMBLY

CONNECTOR/GROUND LOCATIONS (Continued)

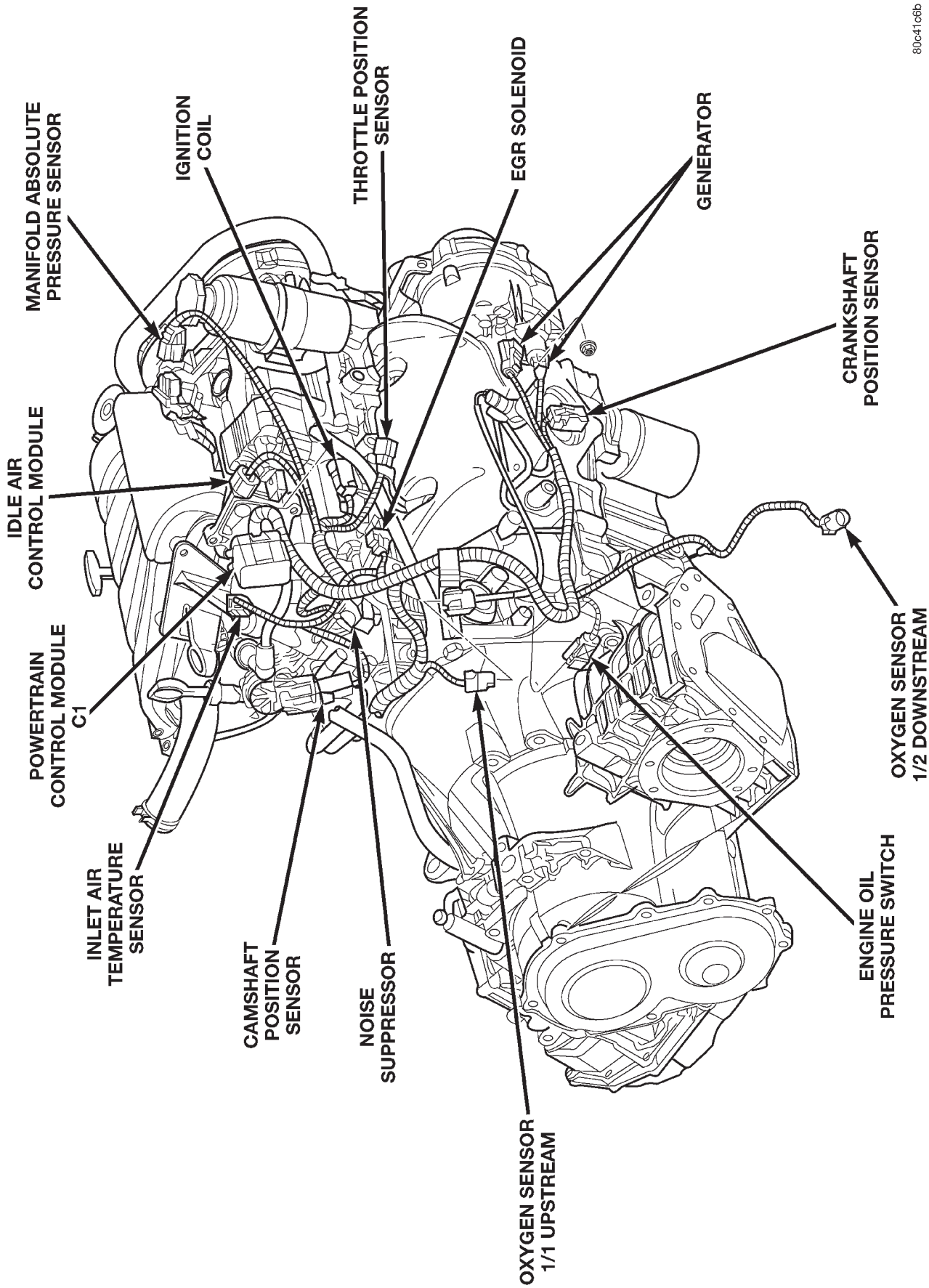

Fig. 4 ENGINE TRANSMISSION ASSEMBLY

CONNECTOR/GROUND LOCATIONS (Continued)

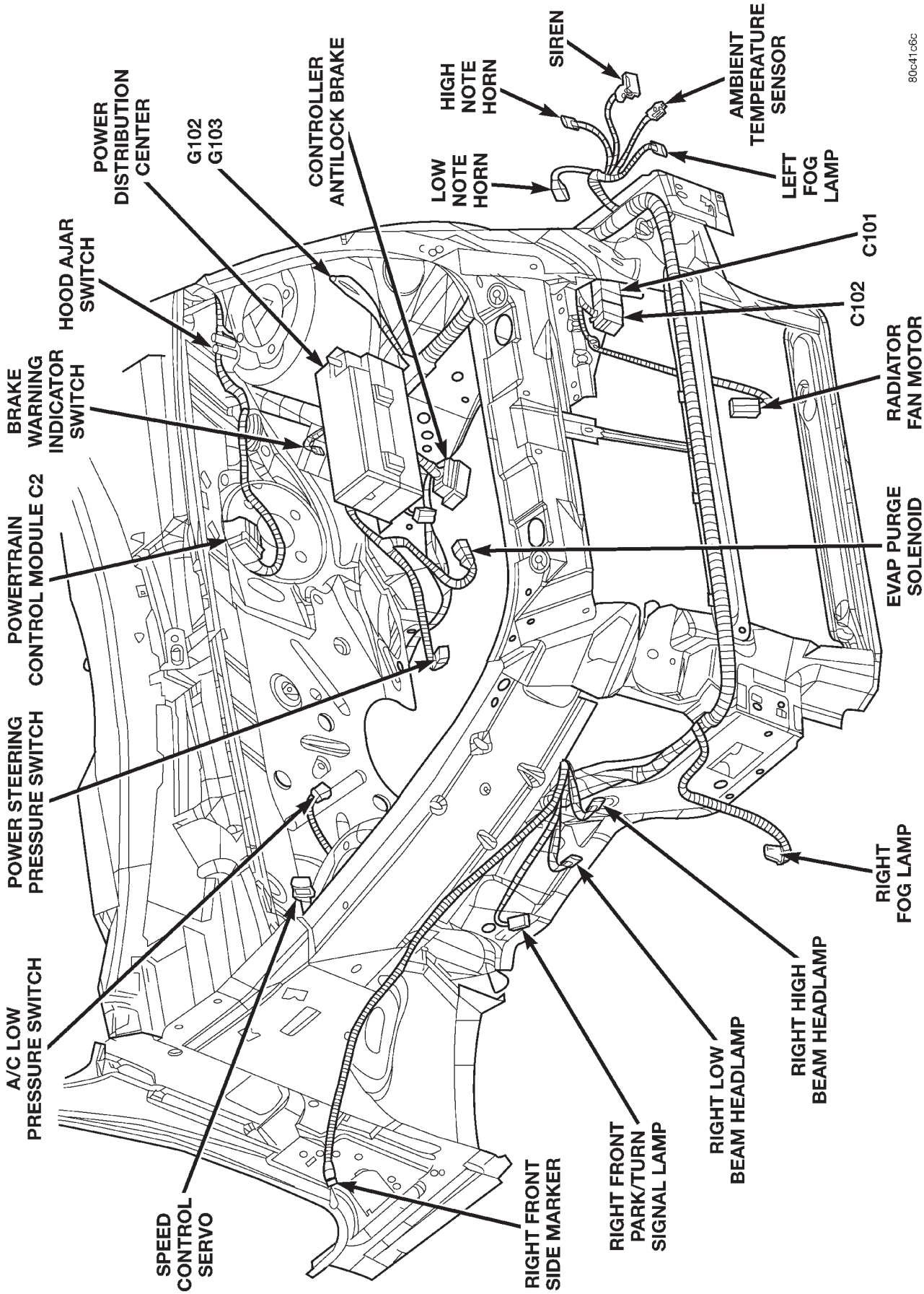

Fig. 5 ENGINE COMPARTMENT

CONNECTOR/GROUND LOCATIONS (Continued)

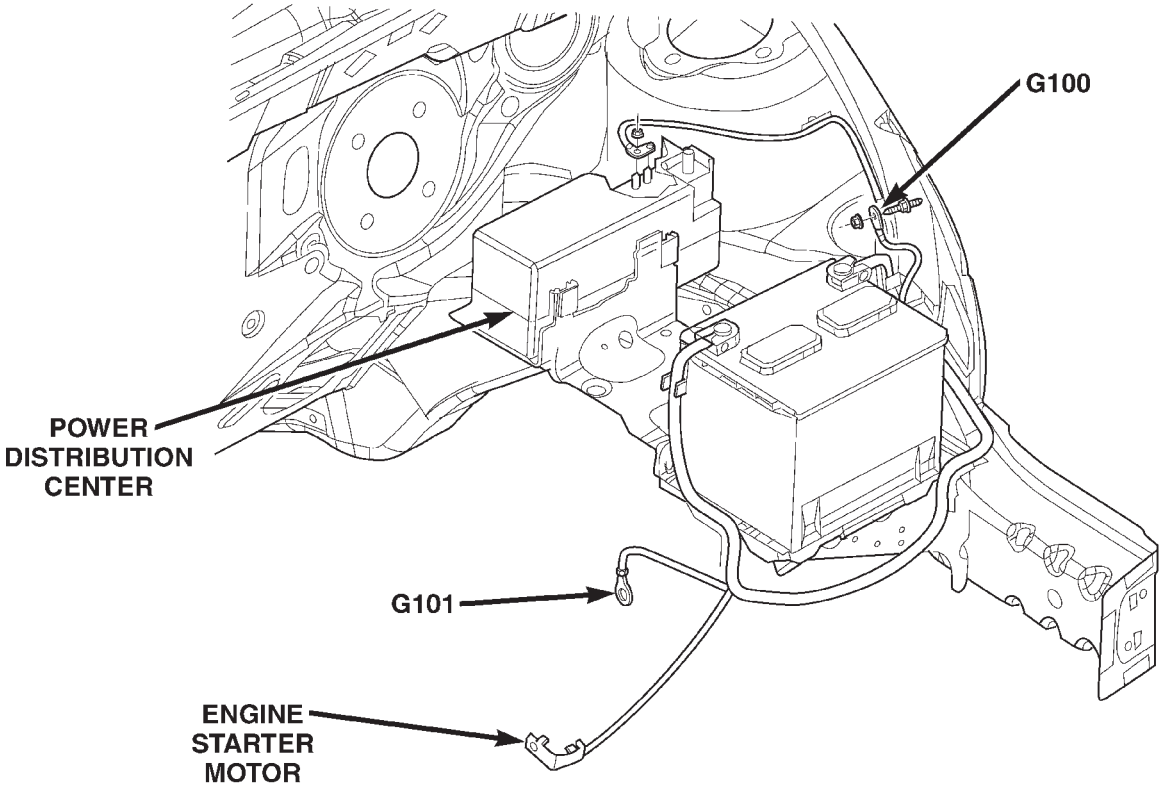

80c06f50

Fig. 6 LEFT SIDE ENGINE COMPARTMENT

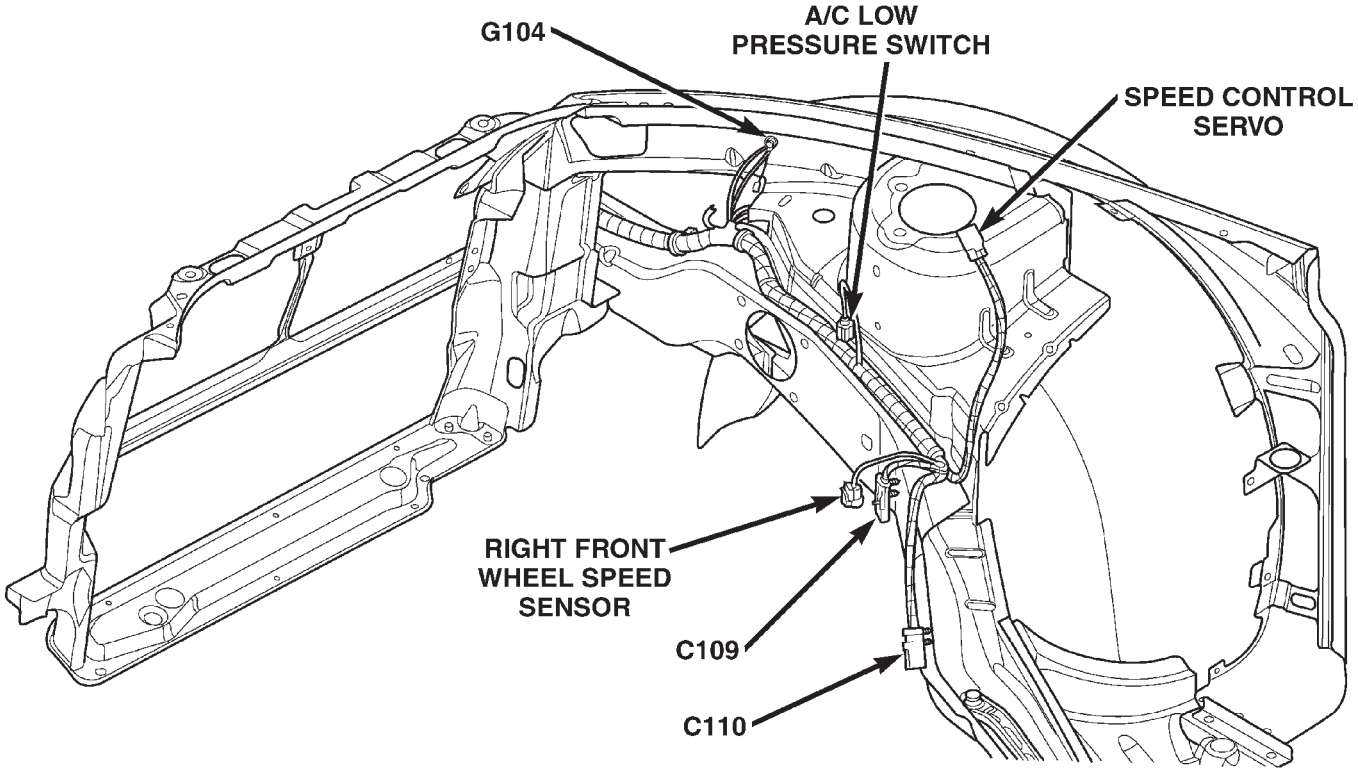

80c07007

Fig. 7 RIGHT SIDE ENGINE COMPARTMENT

CONNECTOR/GROUND LOCATIONS (Continued)

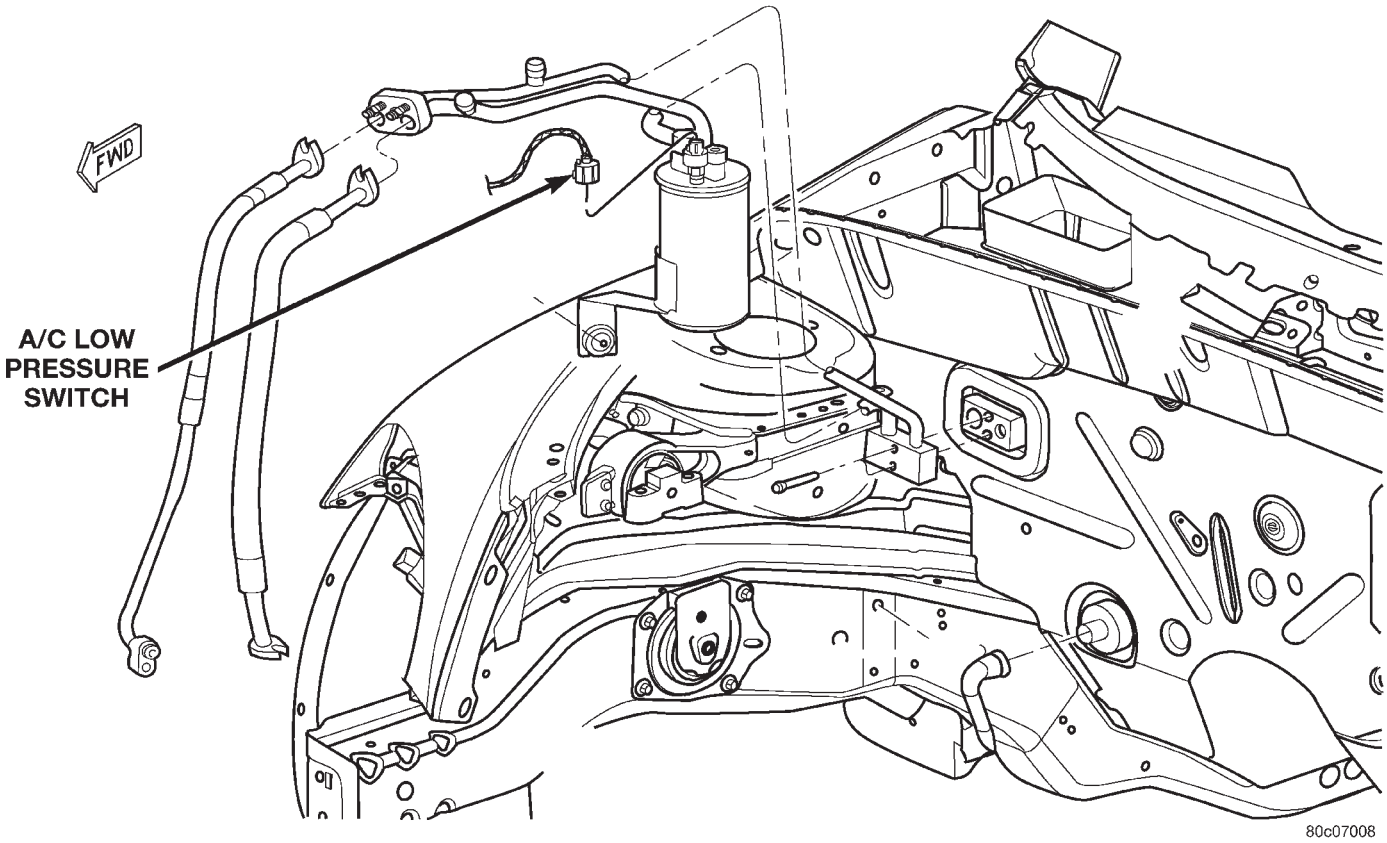

Fig. 8 RIGHT REAR ENGINE COMPARTMENT

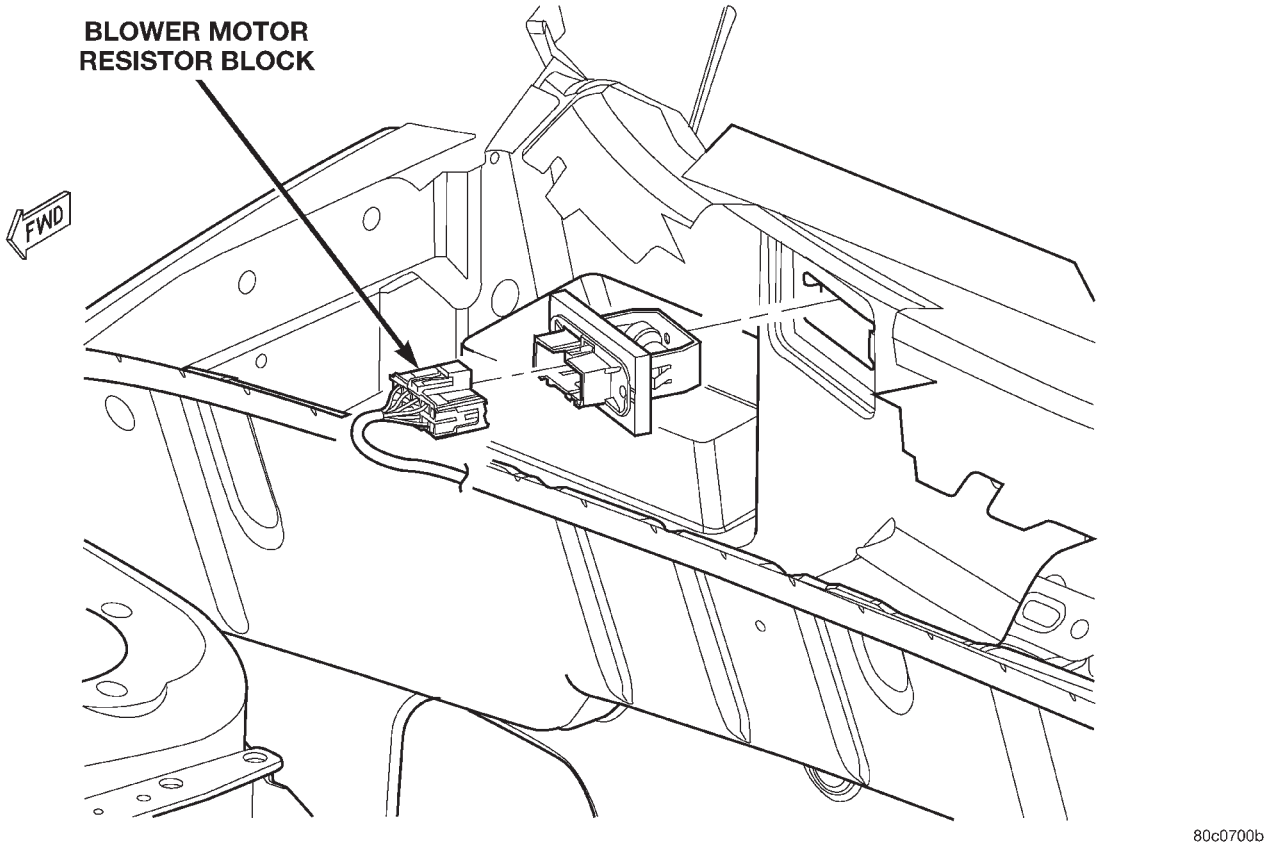

Fig. 9 RIGHT COWL PANEL

CONNECTOR/GROUND LOCATIONS (Continued)

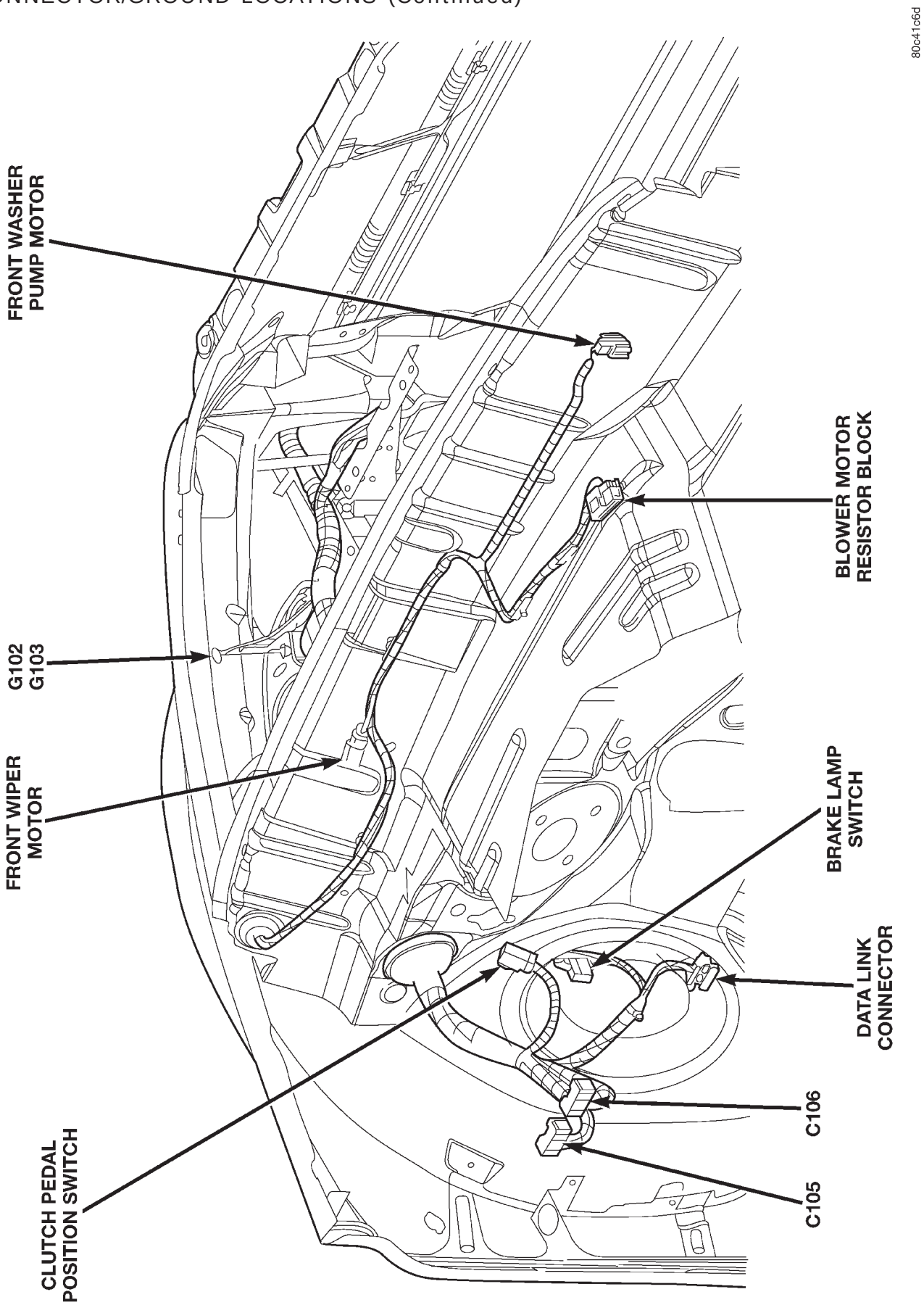

Fig. 10 LEFT SIDE COWL PANEL

CONNECTOR/GROUND LOCATIONS (Continued)

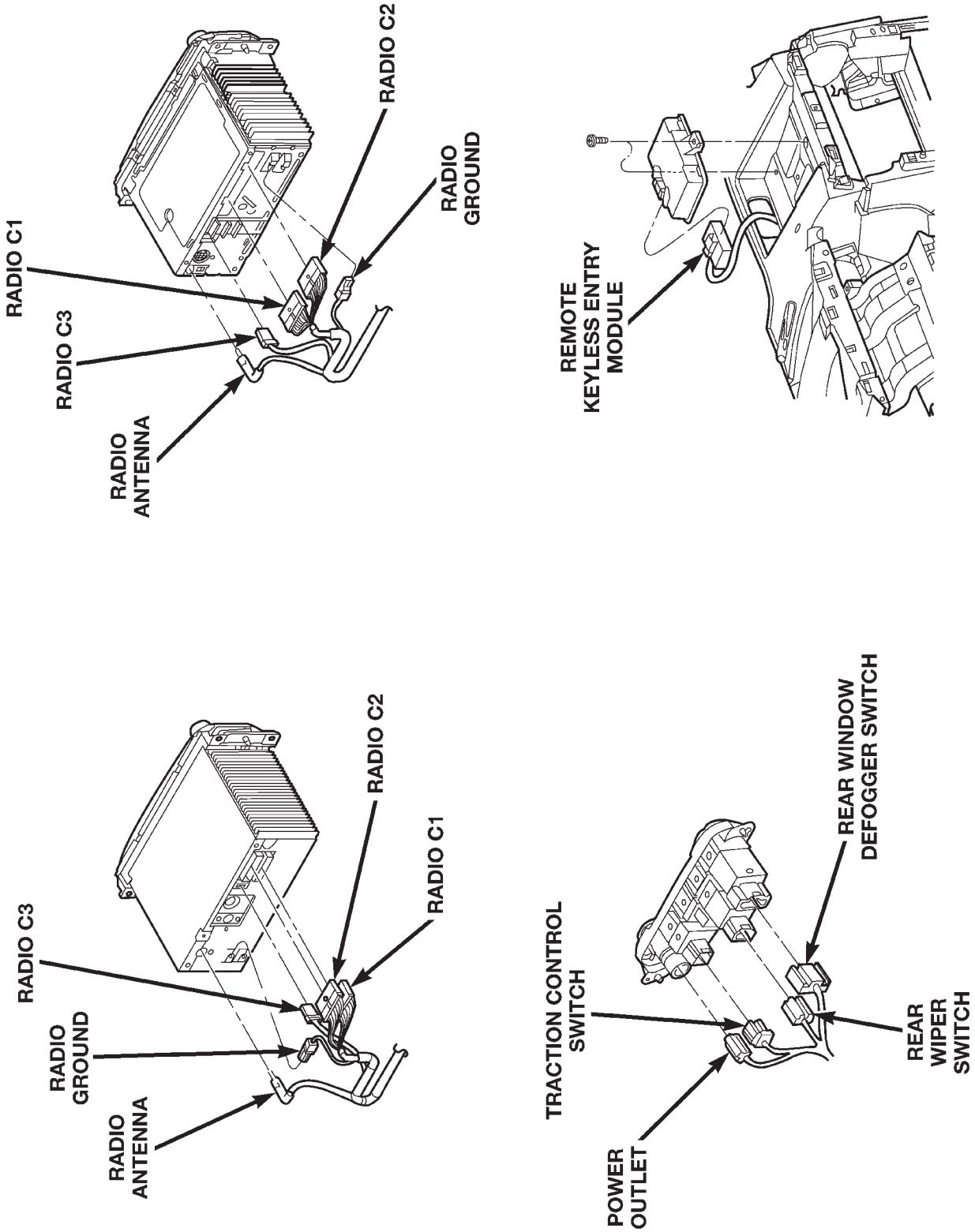

Fig. 11 RADIO

CONNECTOR/GROUND LOCATIONS (Continued)

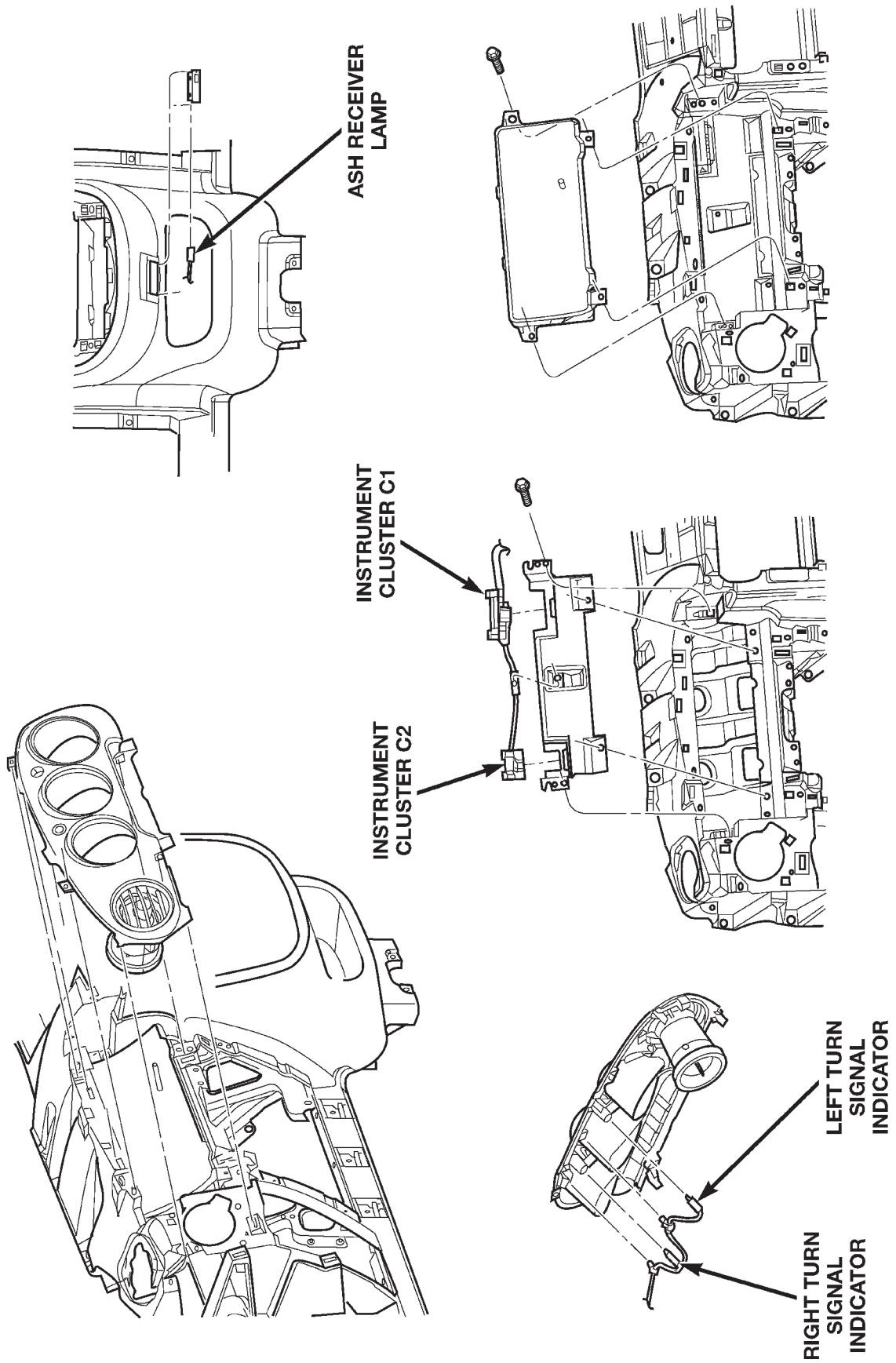

Fig. 12 INSTRUMENT CLUSTER NEW

CONNECTOR/GROUND LOCATIONS (Continued)

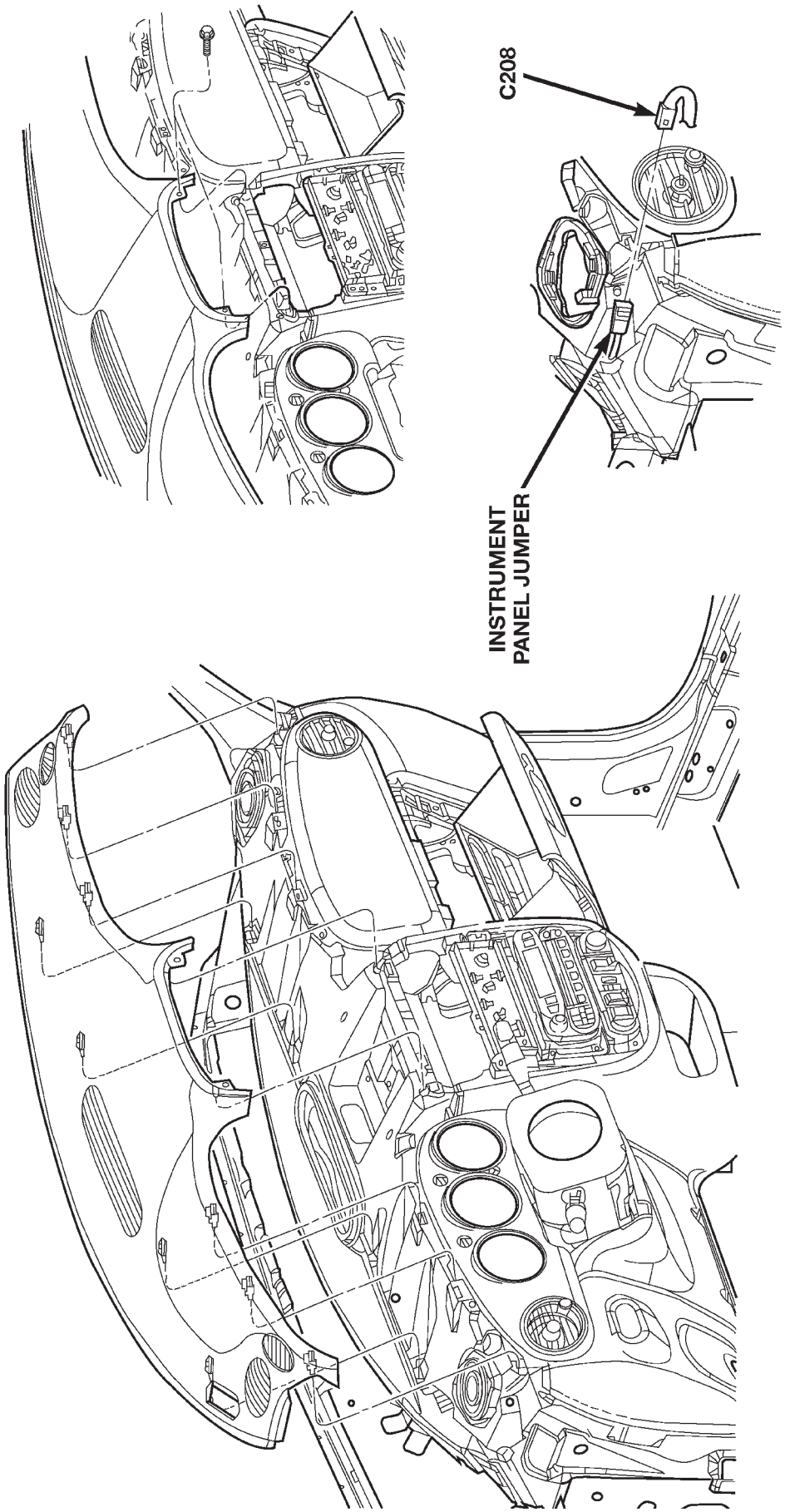

Fig. 13 INSTRUMENT PANEL JUMPER

CONNECTOR/GROUND LOCATIONS (Continued)

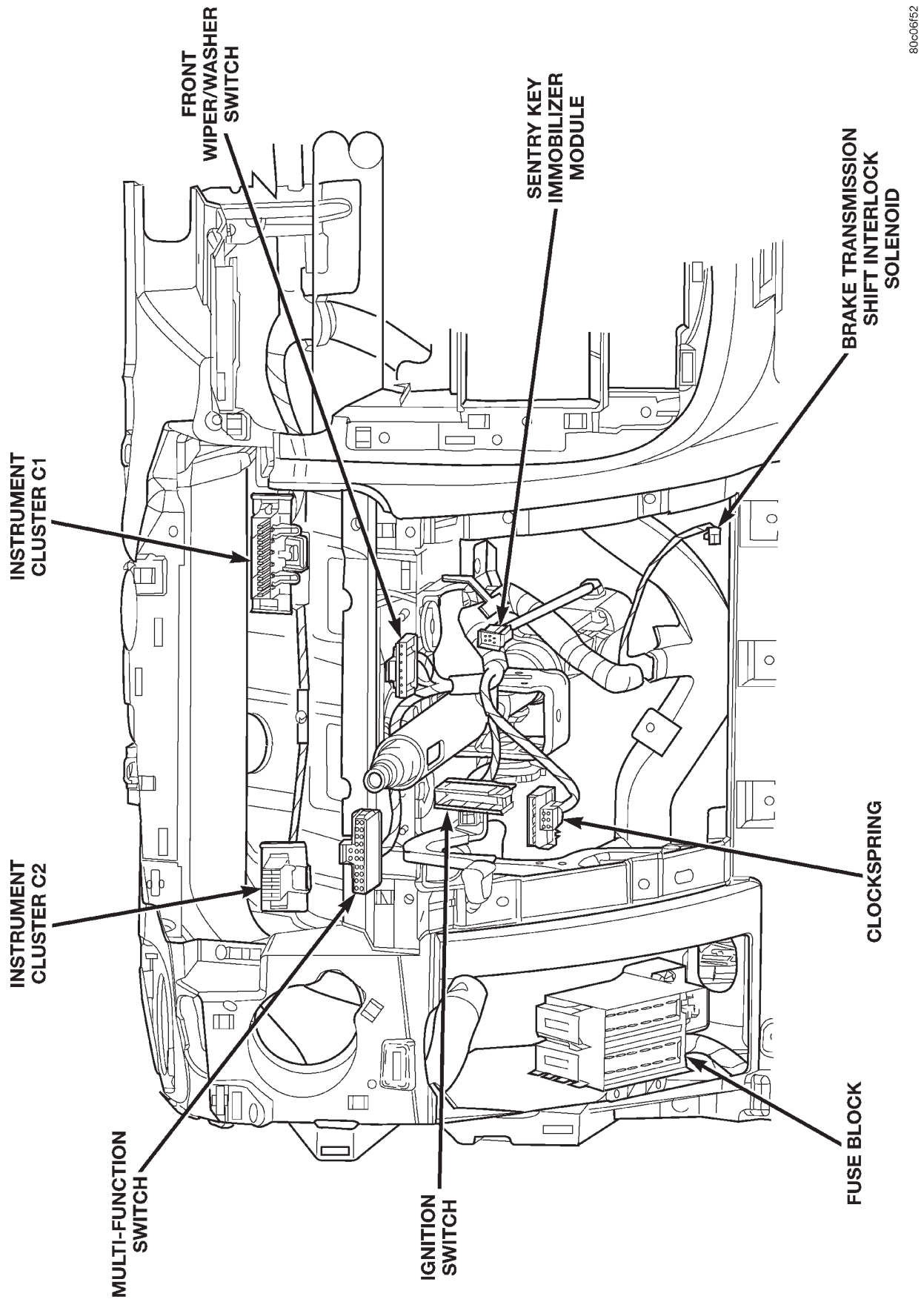

Fig. 14 LEFT SIDE INSTRUMENT PANEL

CONNECTOR/GROUND LOCATIONS (Continued)

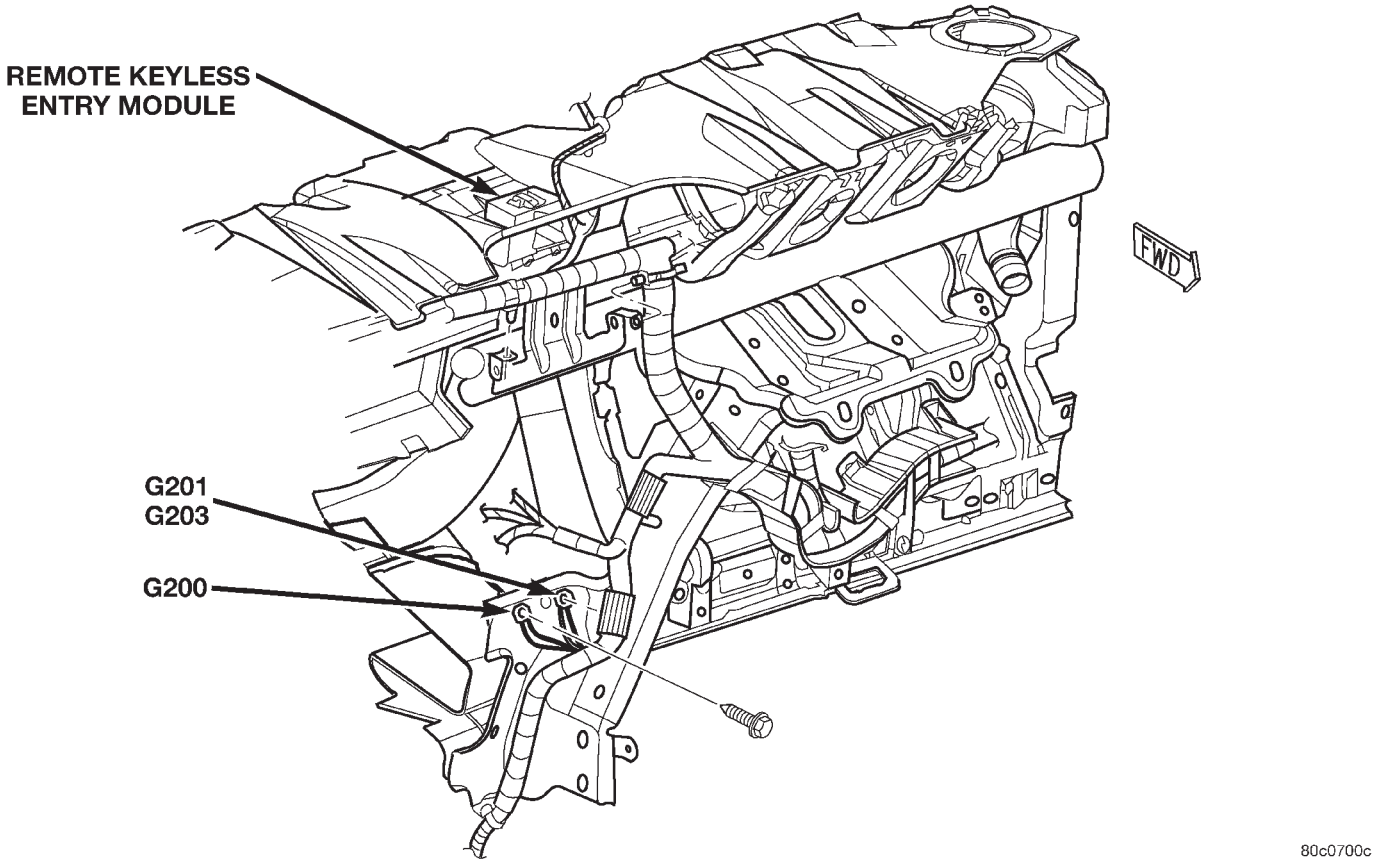

Fig. 15 REAR CENTER OF INSTRUMENT PANEL

CONNECTOR/GROUND LOCATIONS (Continued)

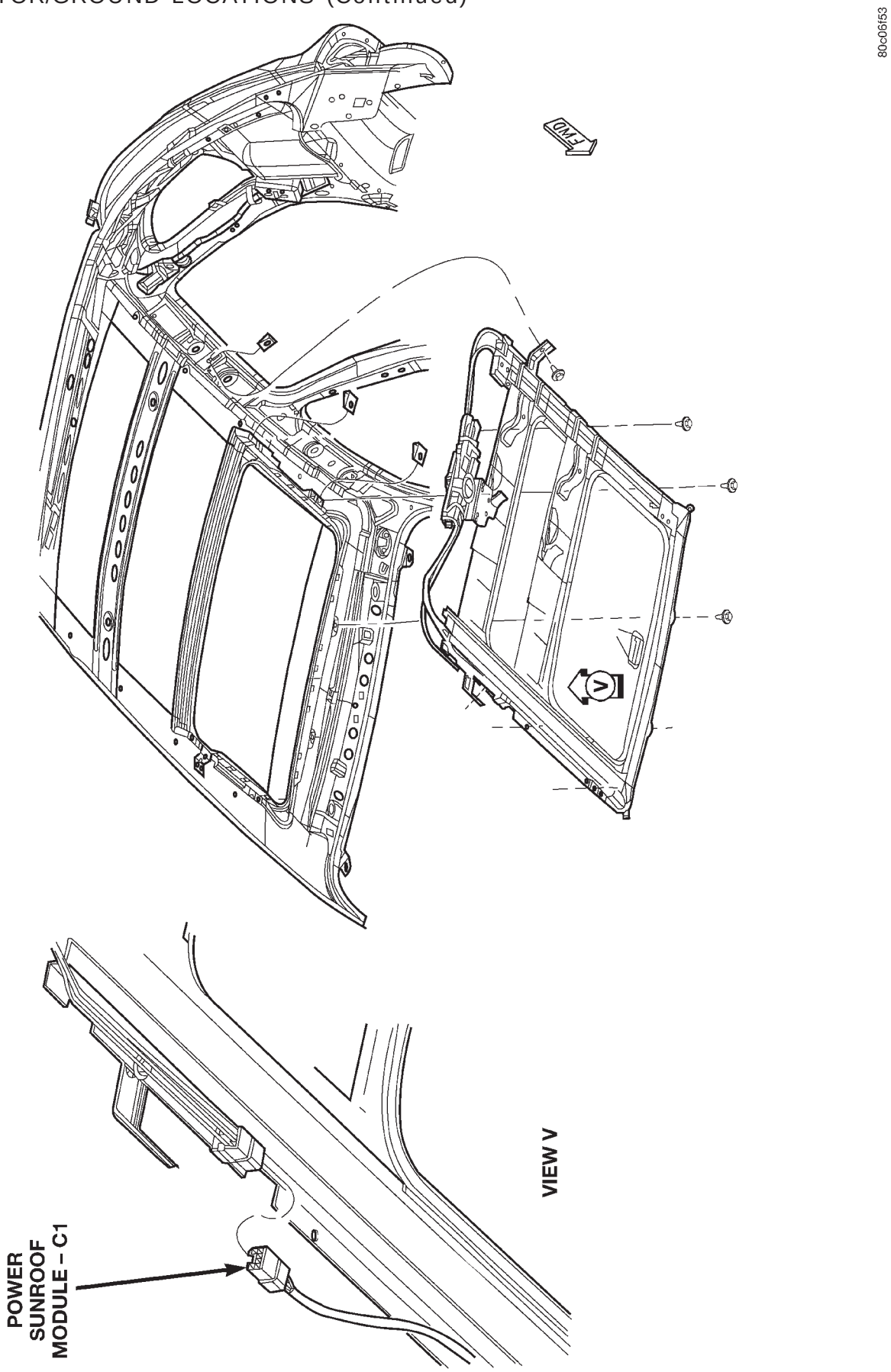

Fig. 16 SUNROOF

CONNECTOR/GROUND LOCATIONS (Continued)

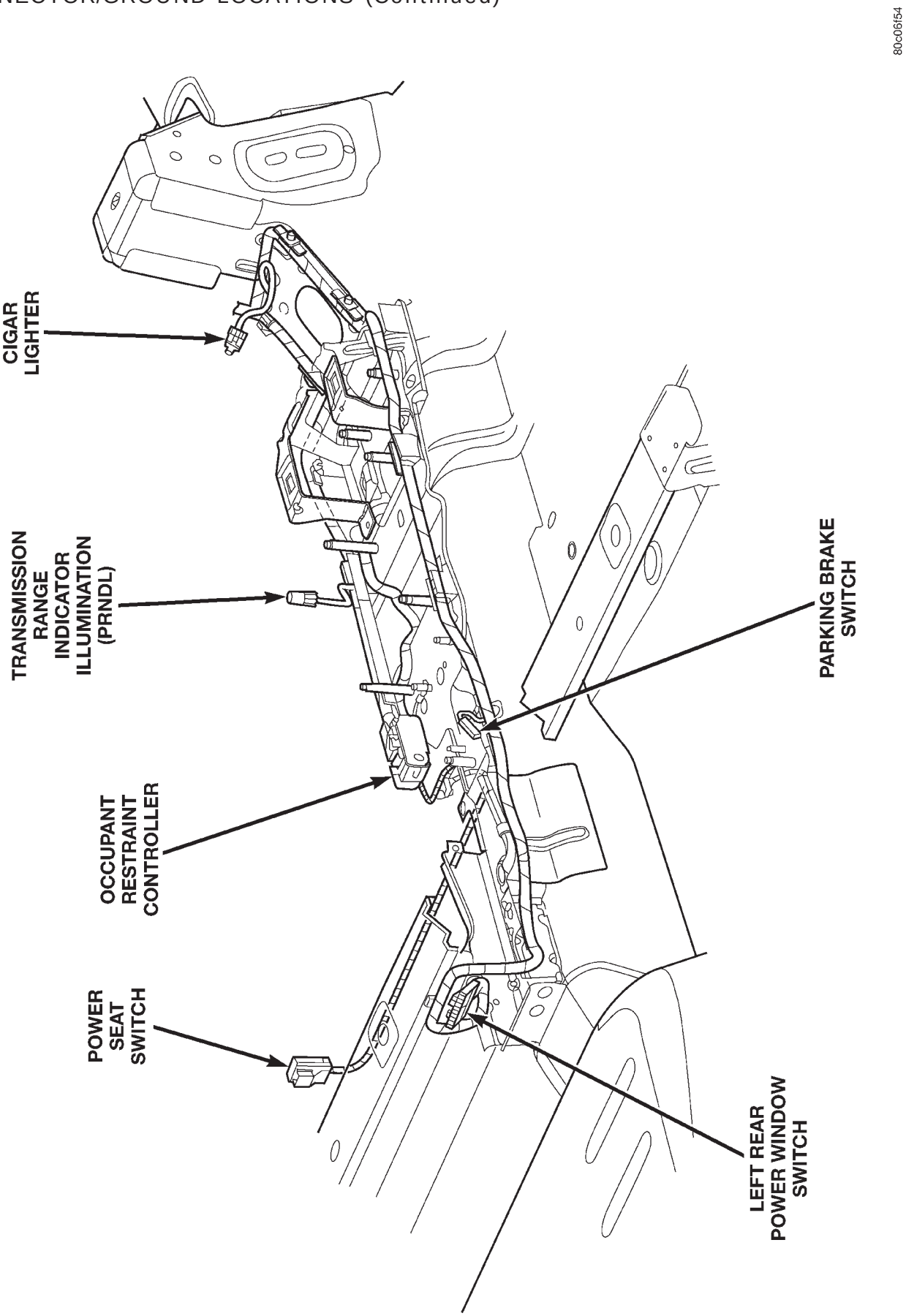

Fig. 17 CENTER CONSOLE

CONNECTOR/GROUND LOCATIONS (Continued)

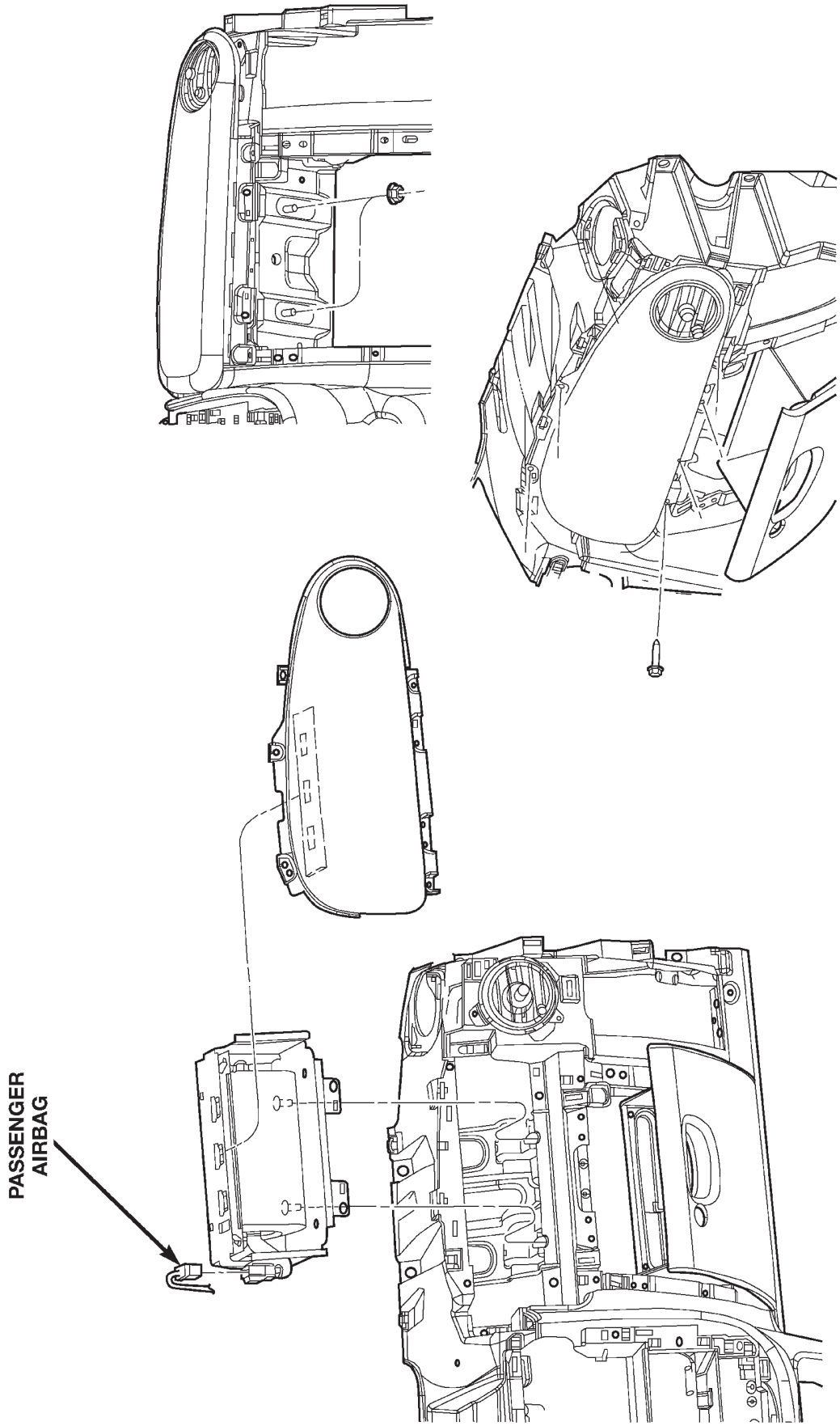

Fig. 18 PASSENGER SIDE AIRBAG

CONNECTOR/GROUND LOCATIONS (Continued)

80c06f55

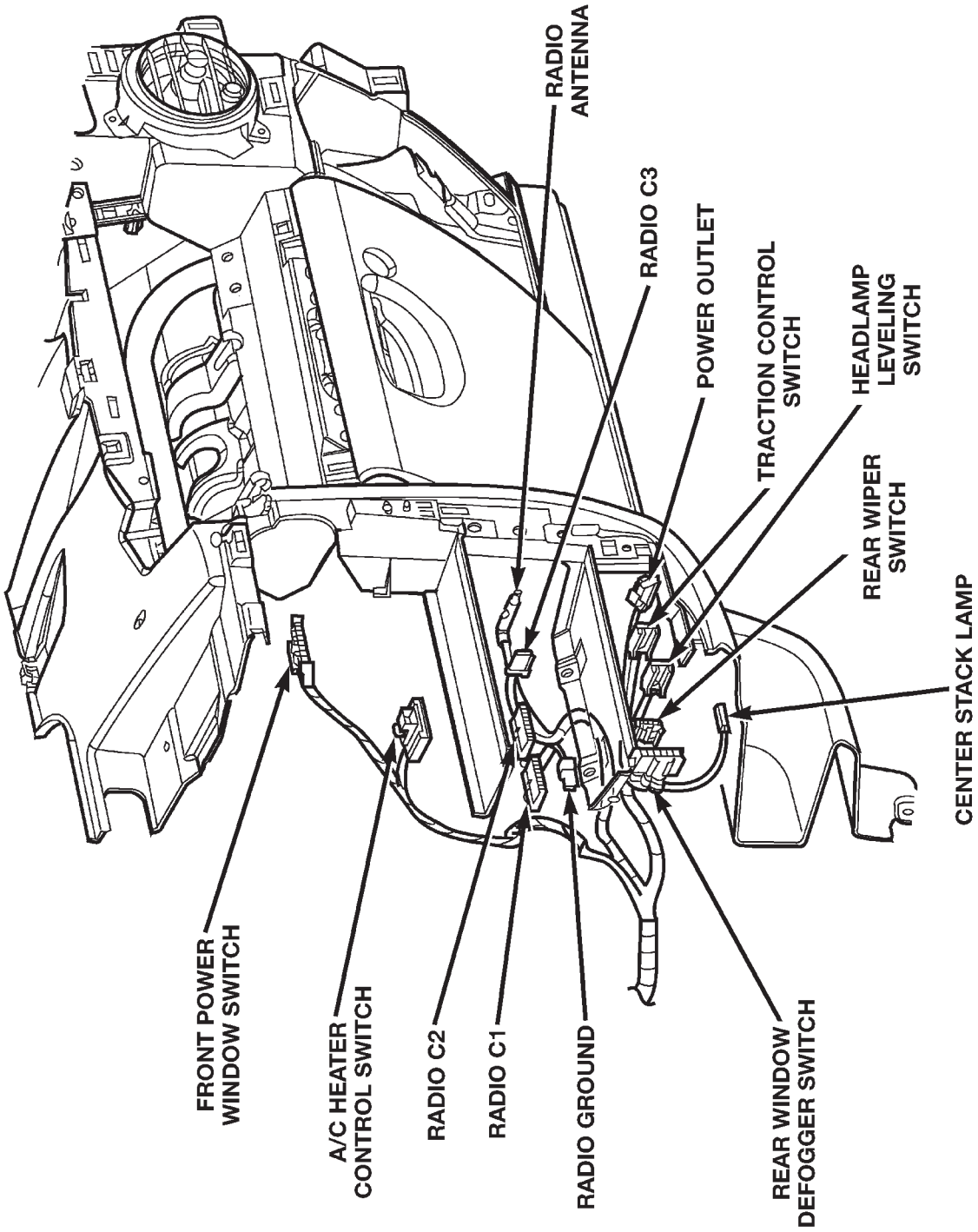

Fig. 19 CENTER OF INSTRUMENT PANEL

CONNECTOR/GROUND LOCATIONS (Continued)

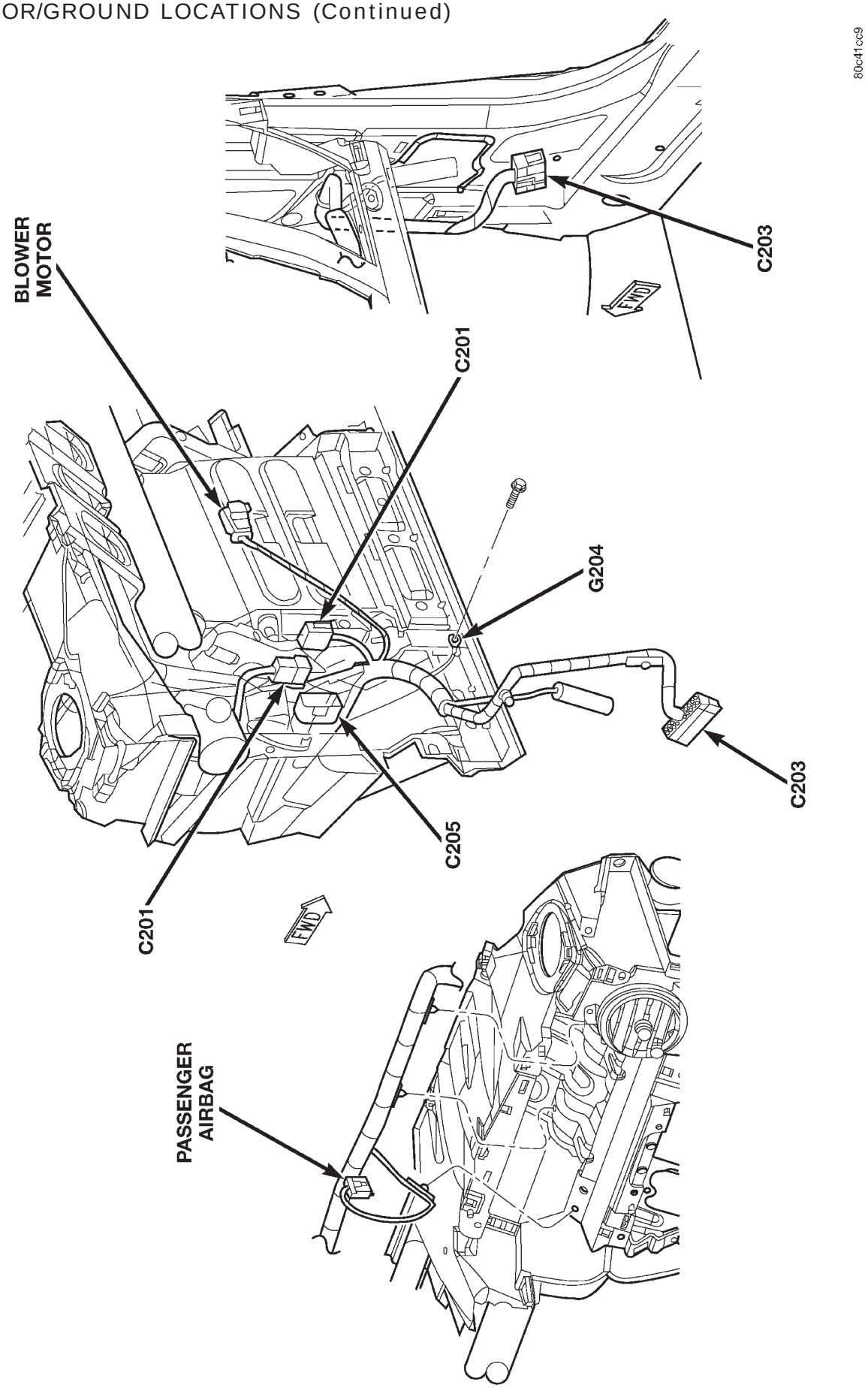

Fig. 20 RIGHT REAR INSTRUMENT PANEL

CONNECTOR/GROUND LOCATIONS (Continued)

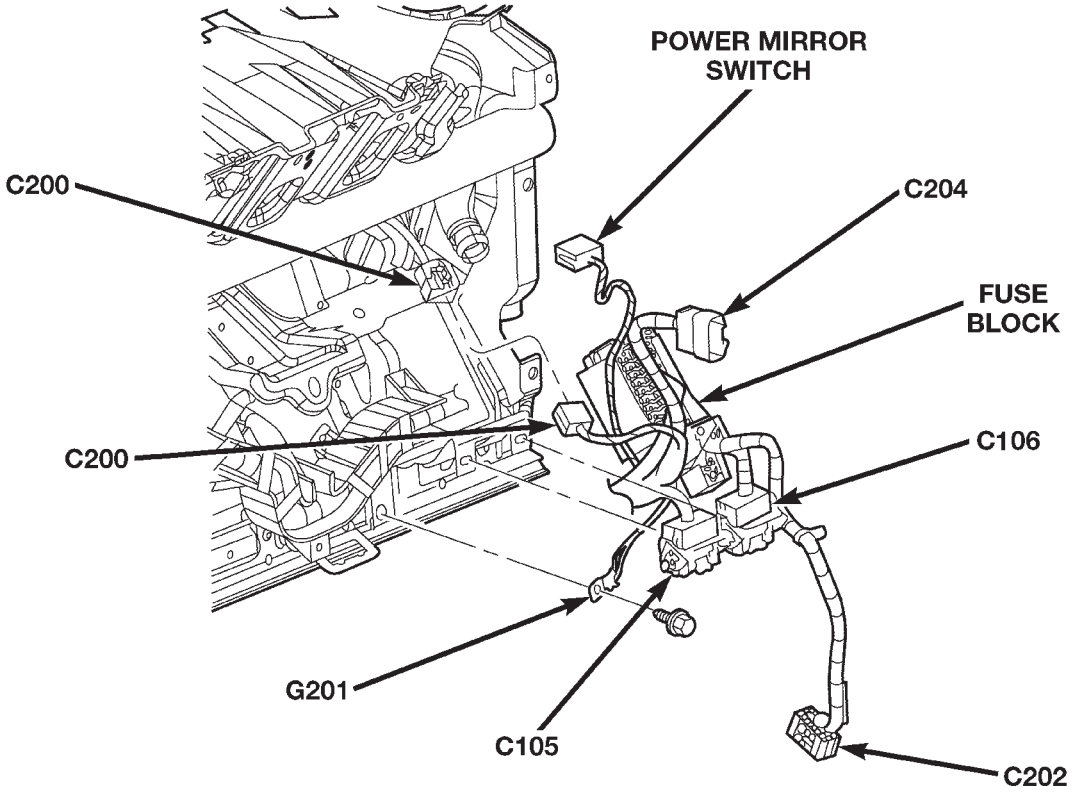

Fig. 21 LEFT REAR OF INSTRUMENT PANEL

CONNECTOR/GROUND LOCATIONS (Continued)

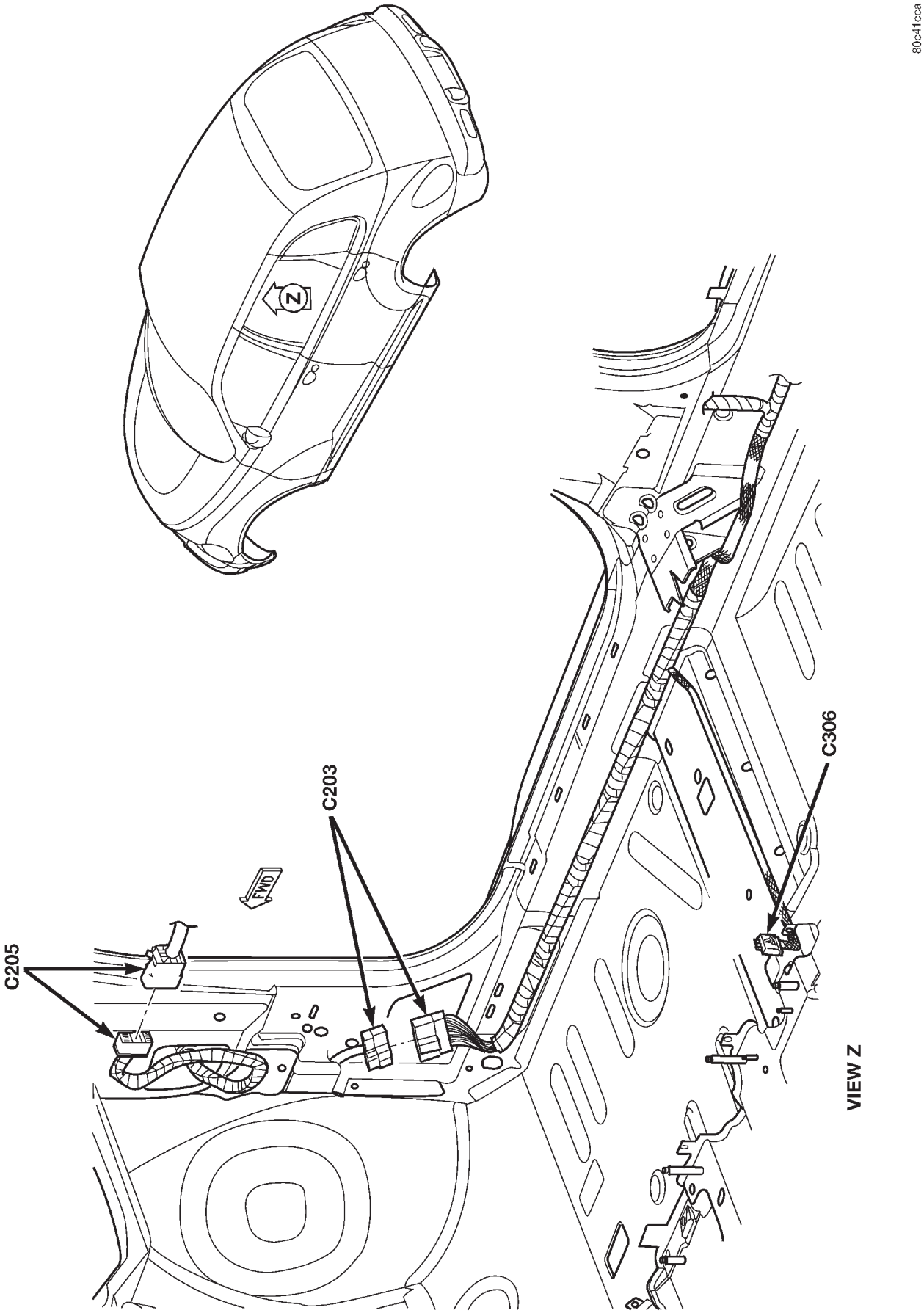

Fig. 22 RIGHT FRONT BODY

CONNECTOR/GROUND LOCATIONS (Continued)

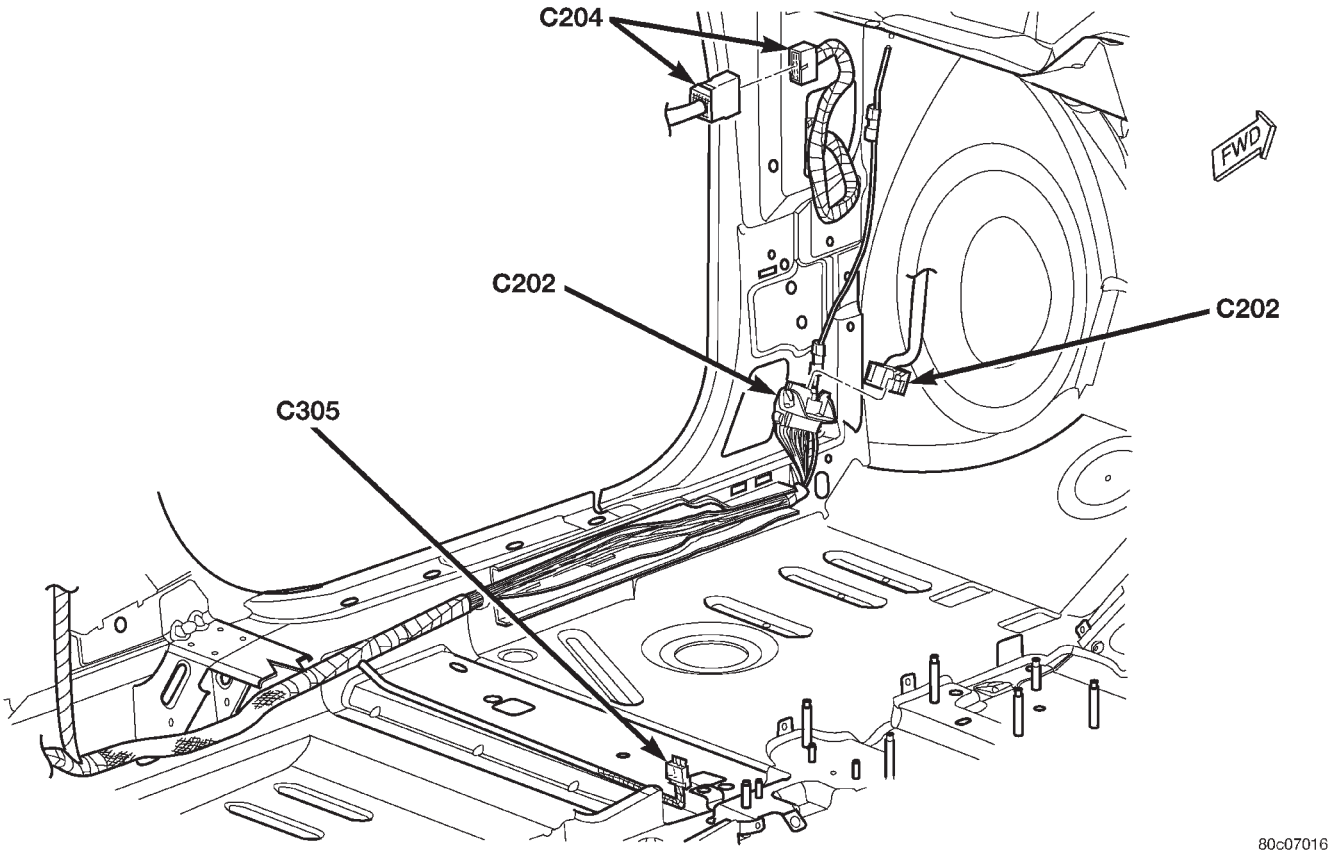

Fig. 23 LEFT FRONT BODY

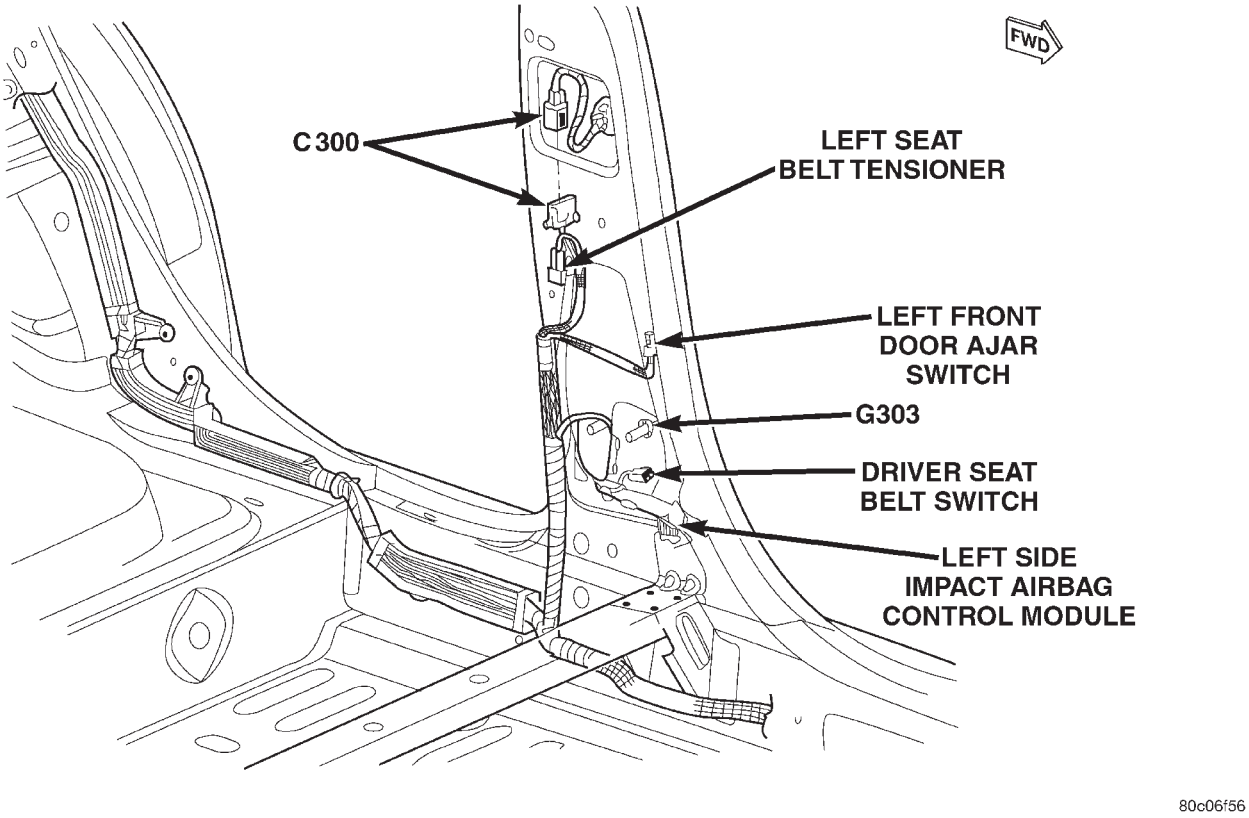

Fig. 24 LEFT SIDE BODY

CONNECTOR/GROUND LOCATIONS (Continued)

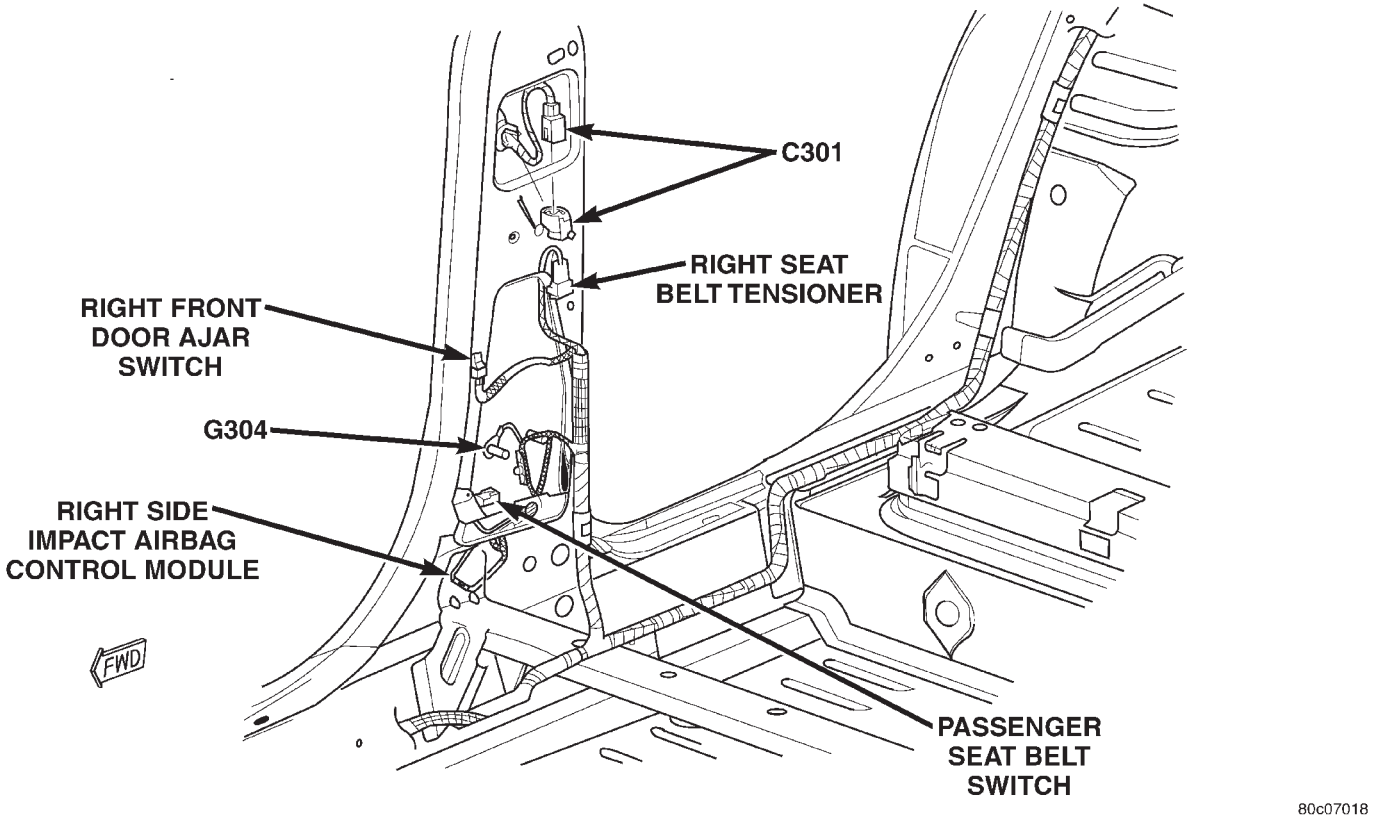

Fig. 25 RIGHT REAR BODY

CONNECTOR/GROUND LOCATIONS (Continued)

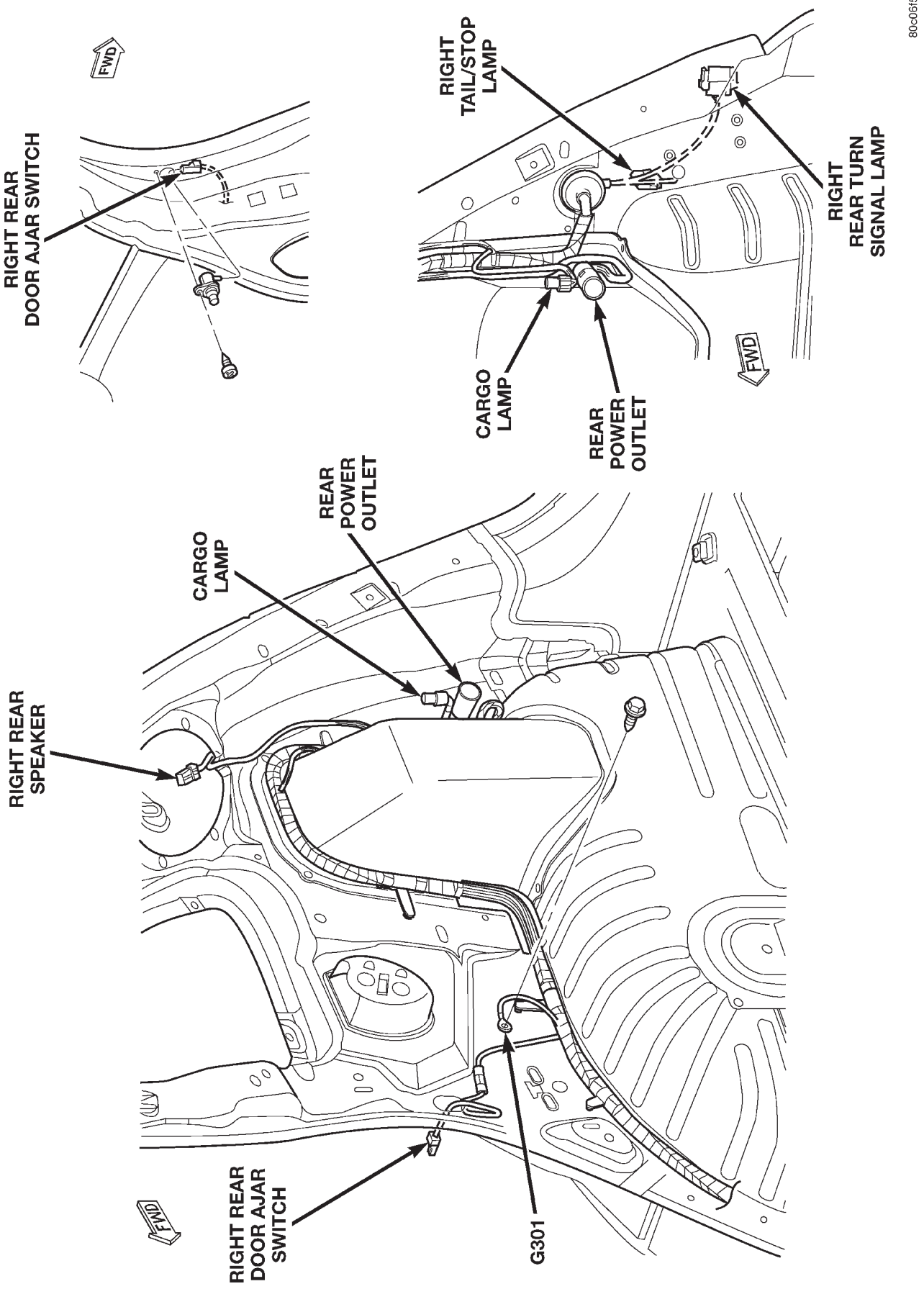

Fig. 26 RIGHT REAR QUARTER

CONNECTOR/GROUND LOCATIONS (Continued)

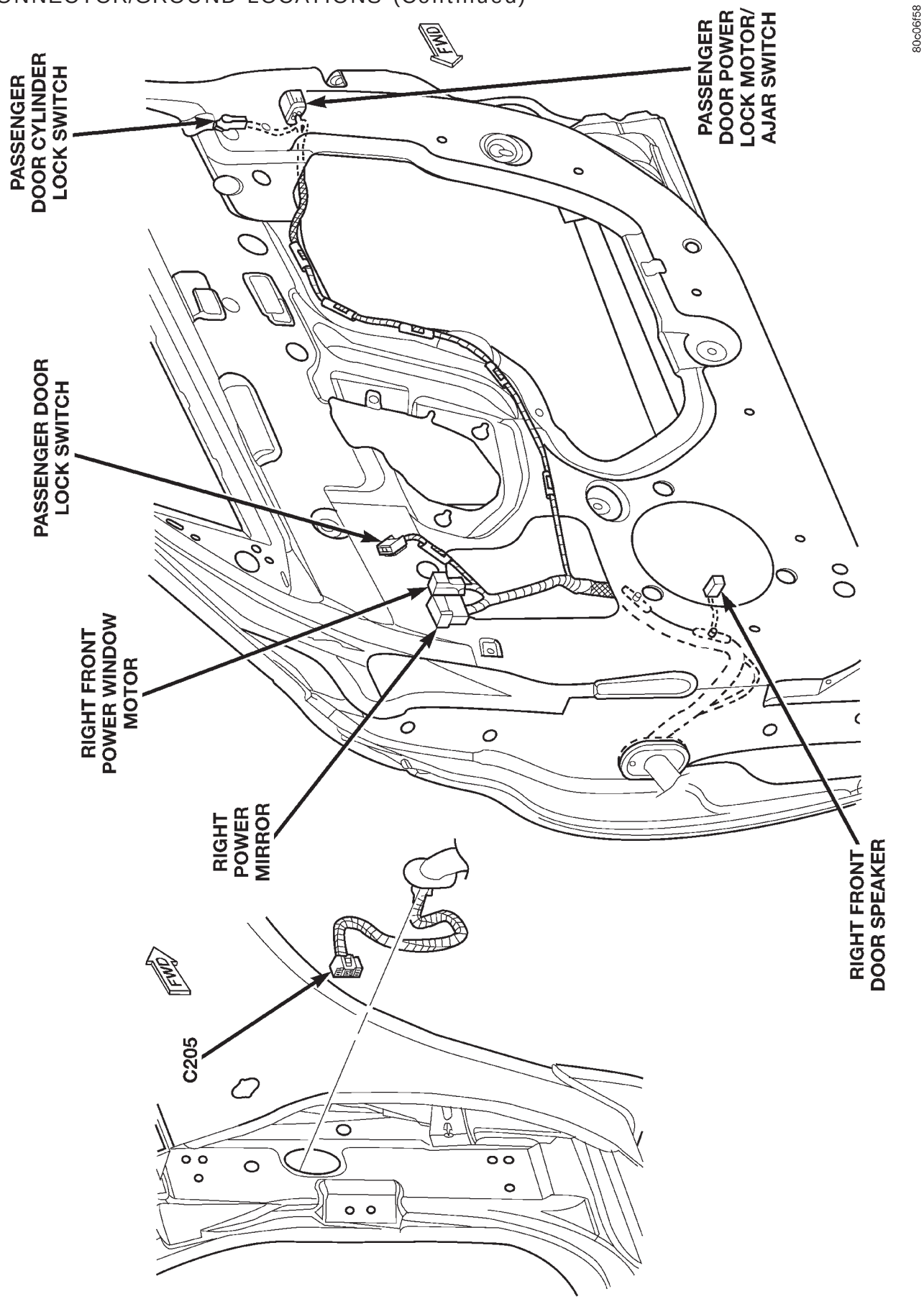

Fig. 27 RIGHT FRONT DOOR (LEFT FRONT DOOR SIMILAR)

CONNECTOR/GROUND LOCATIONS (Continued)

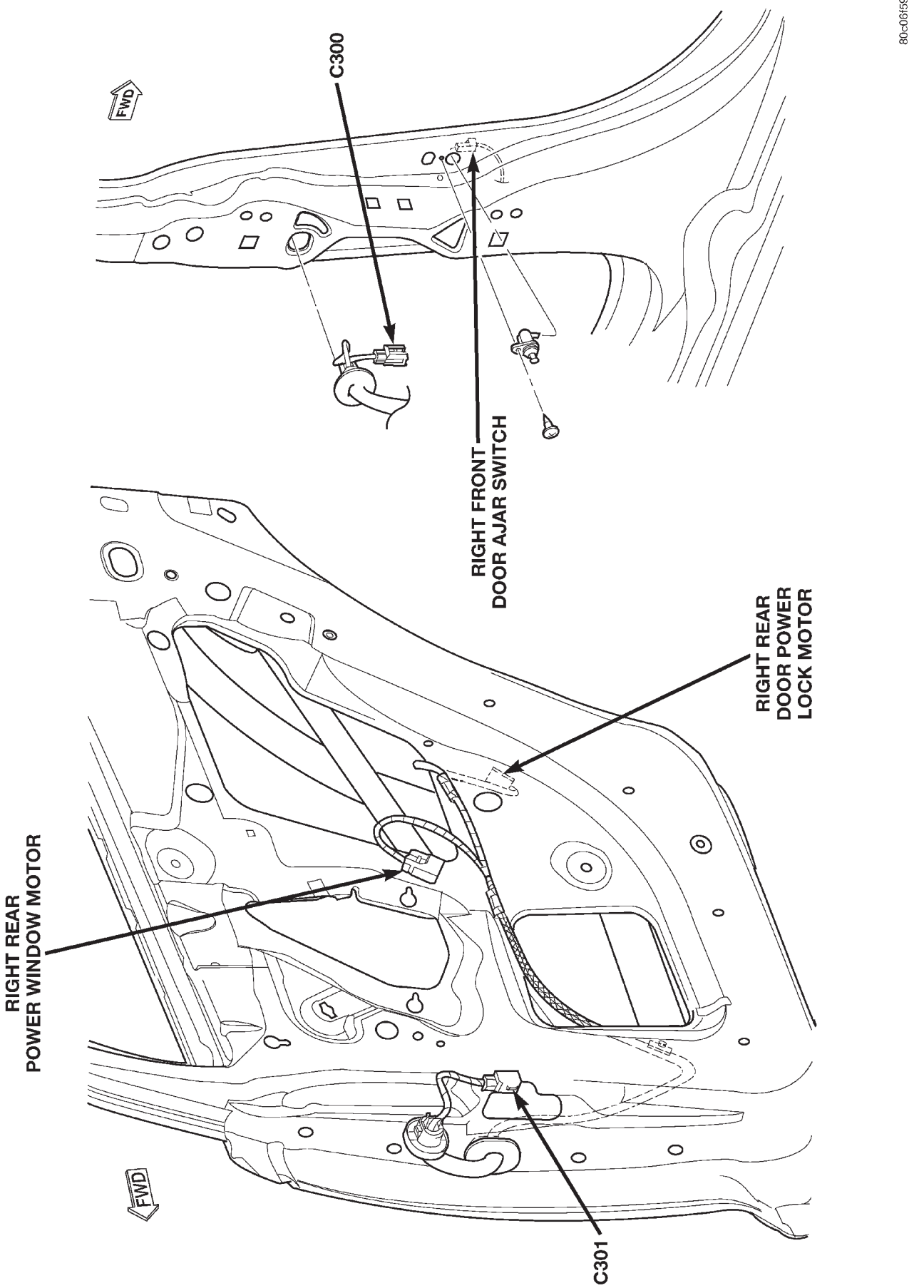

Fig. 28 RIGHT REAR DOOR

CONNECTOR/GROUND LOCATIONS (Continued)

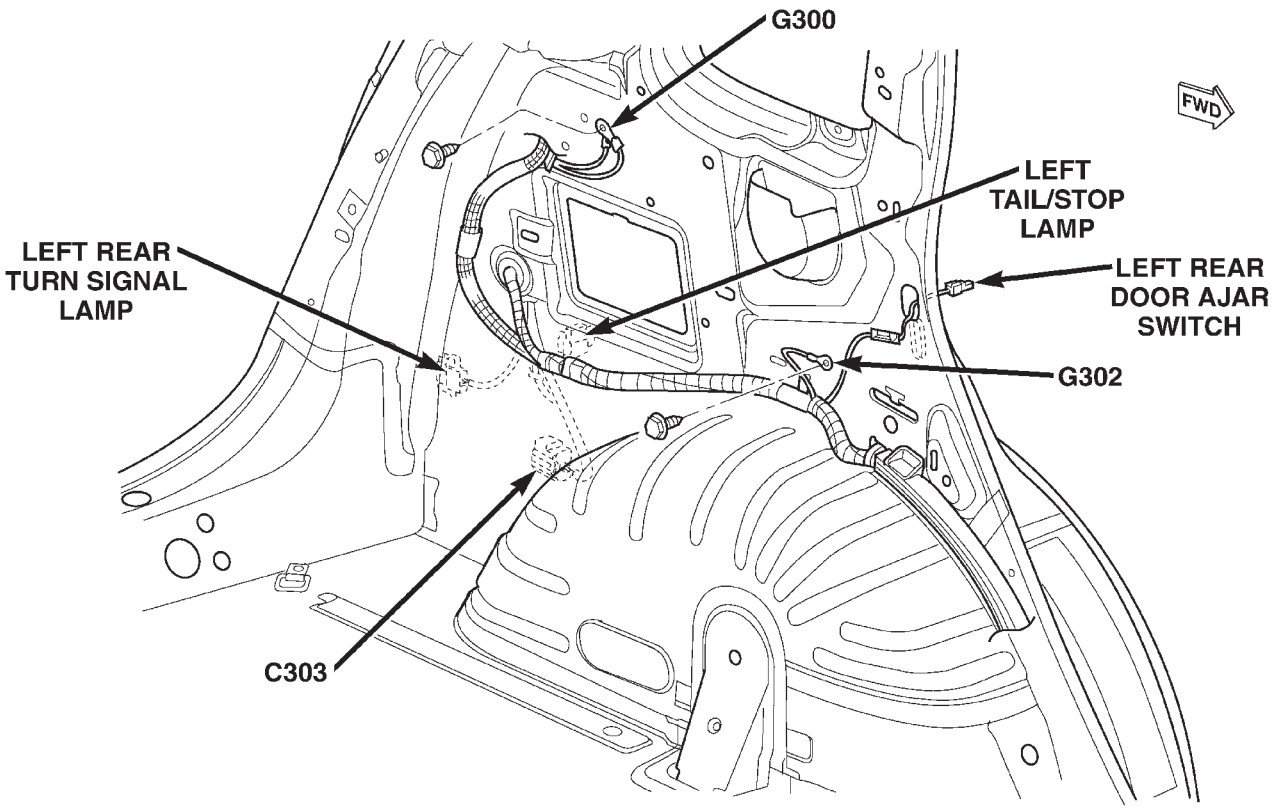

Fig. 29 LEFT SIDE CARGO AREA

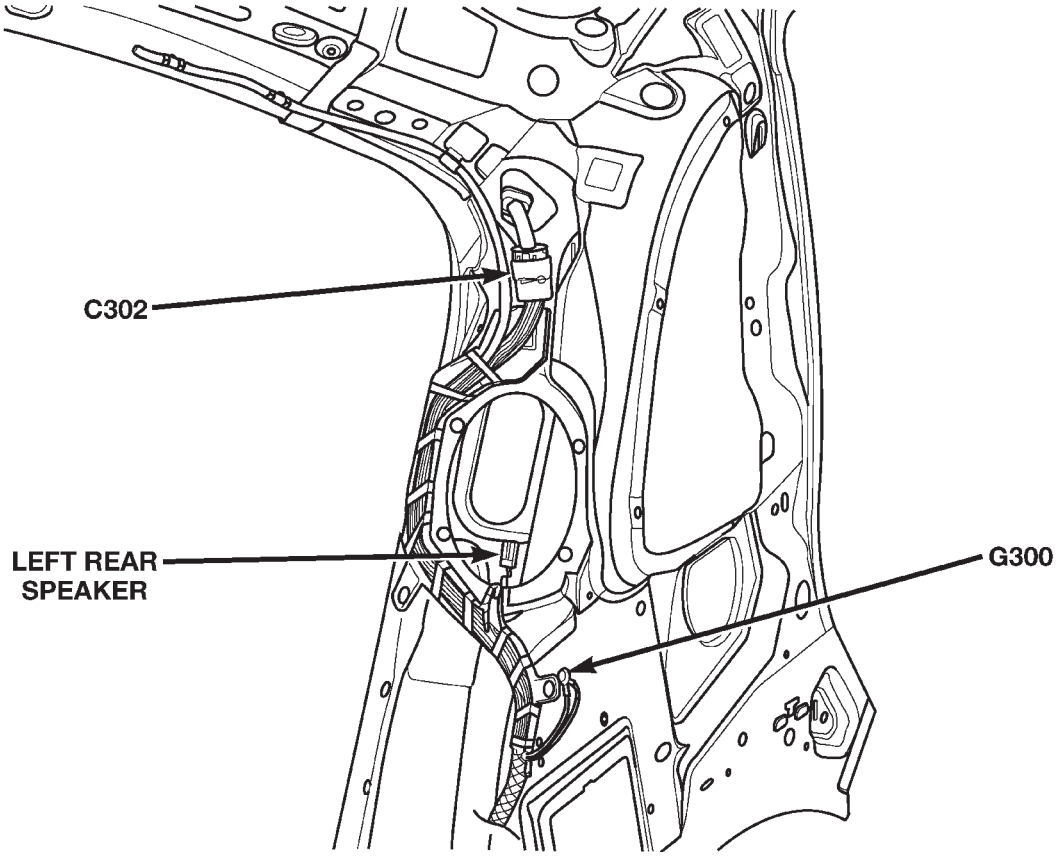

Fig. 30 LEFT REAR SPEAKER

CONNECTOR/GROUND LOCATIONS (Continued)

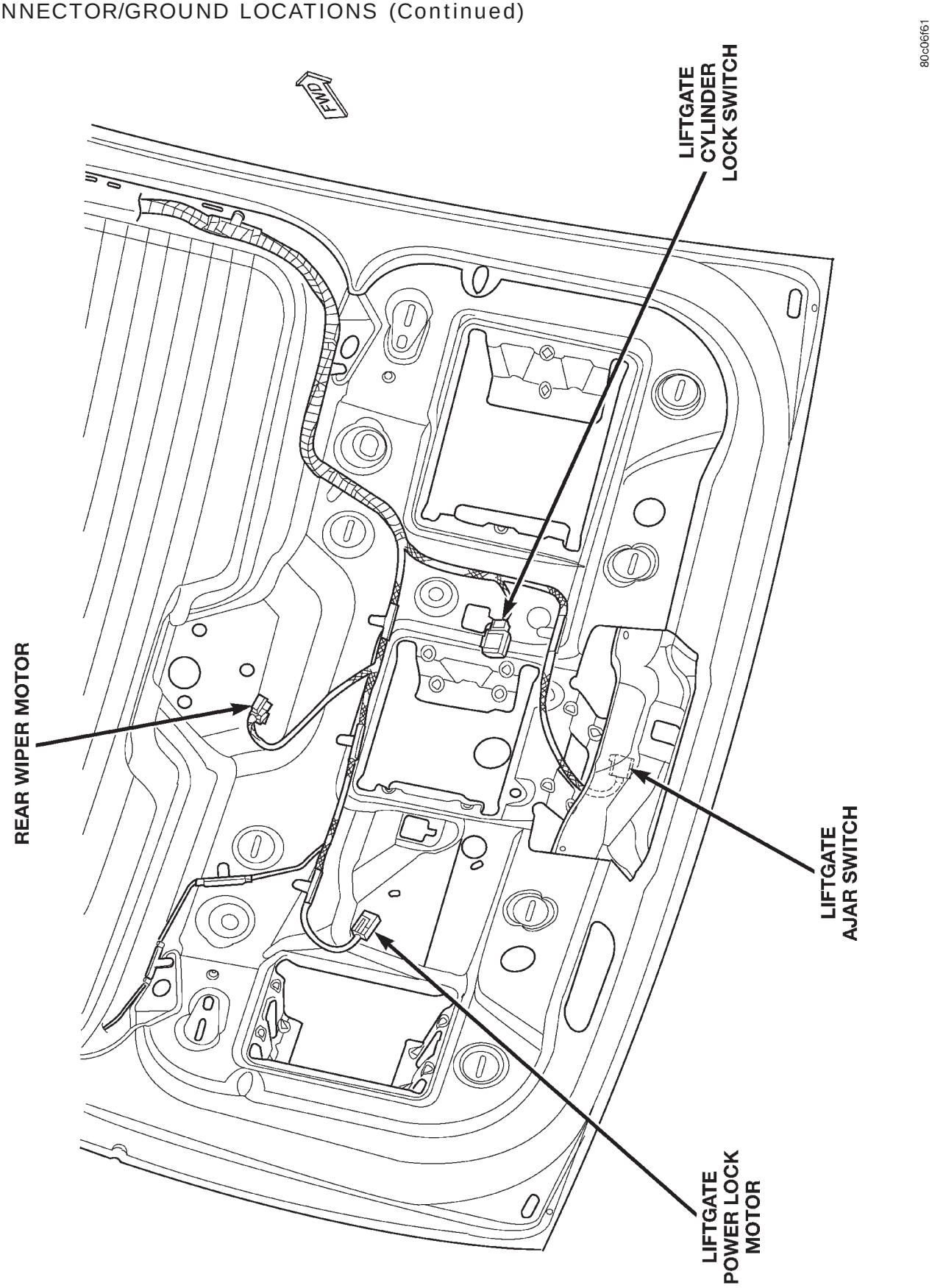

Fig. 31 LOWER LIFTGATE

CONNECTOR/GROUND LOCATIONS (Continued)

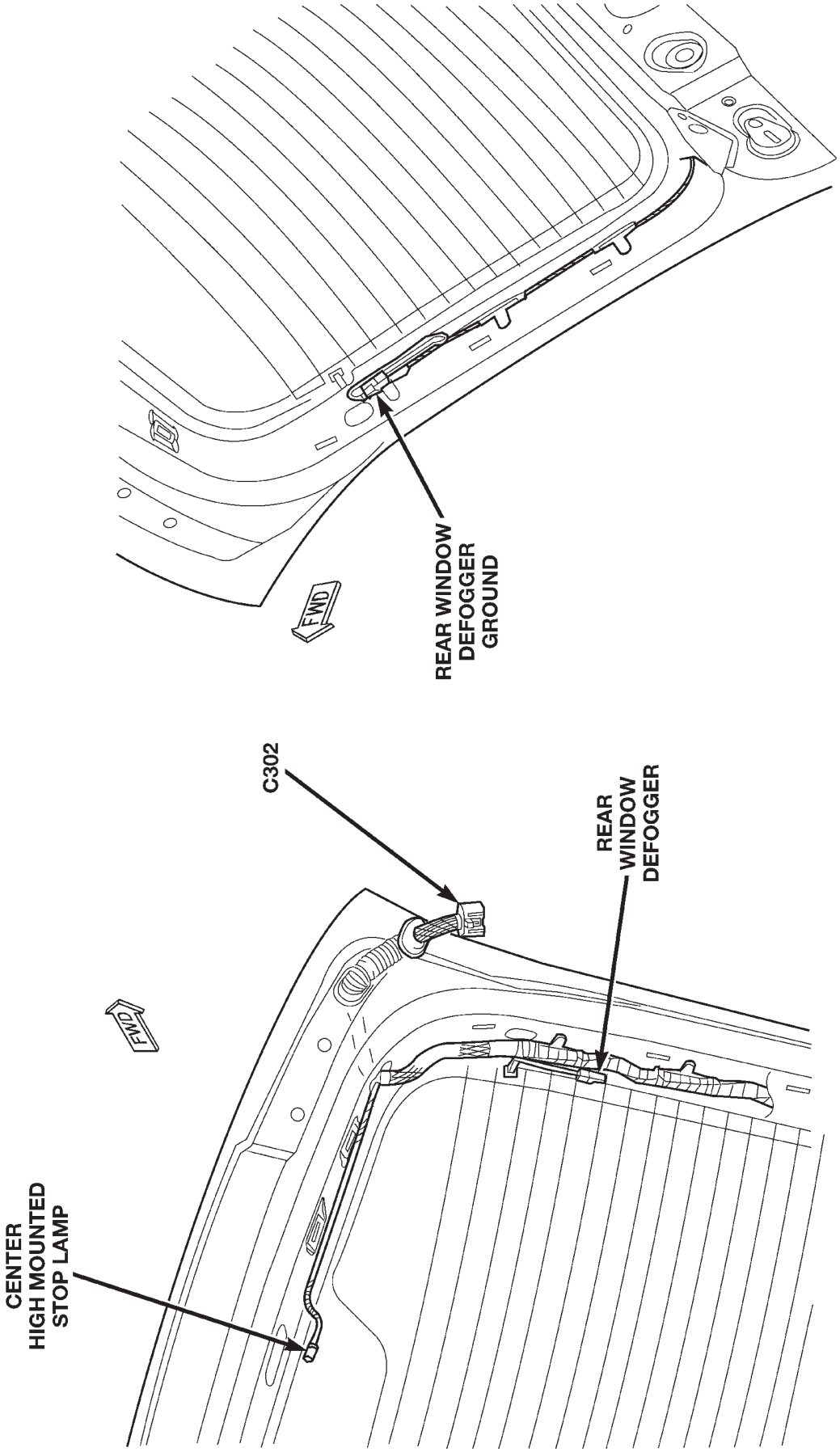

Fig. 32 HEATED REAR WINDOW

CONNECTOR/GROUND LOCATIONS (Continued)

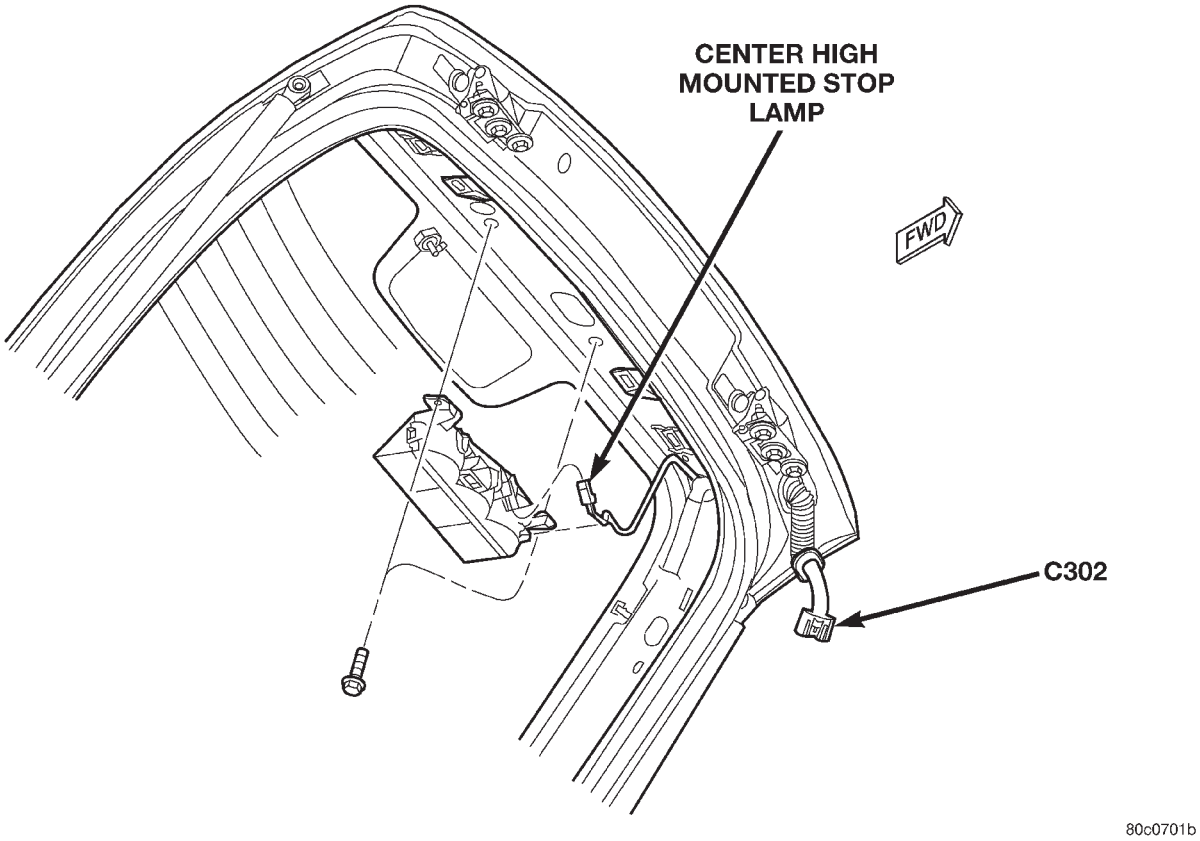

Fig. 33 CENTER HIGH MOUNTED STOP LAMP

CONNECTOR/GROUND LOCATIONS (Continued)

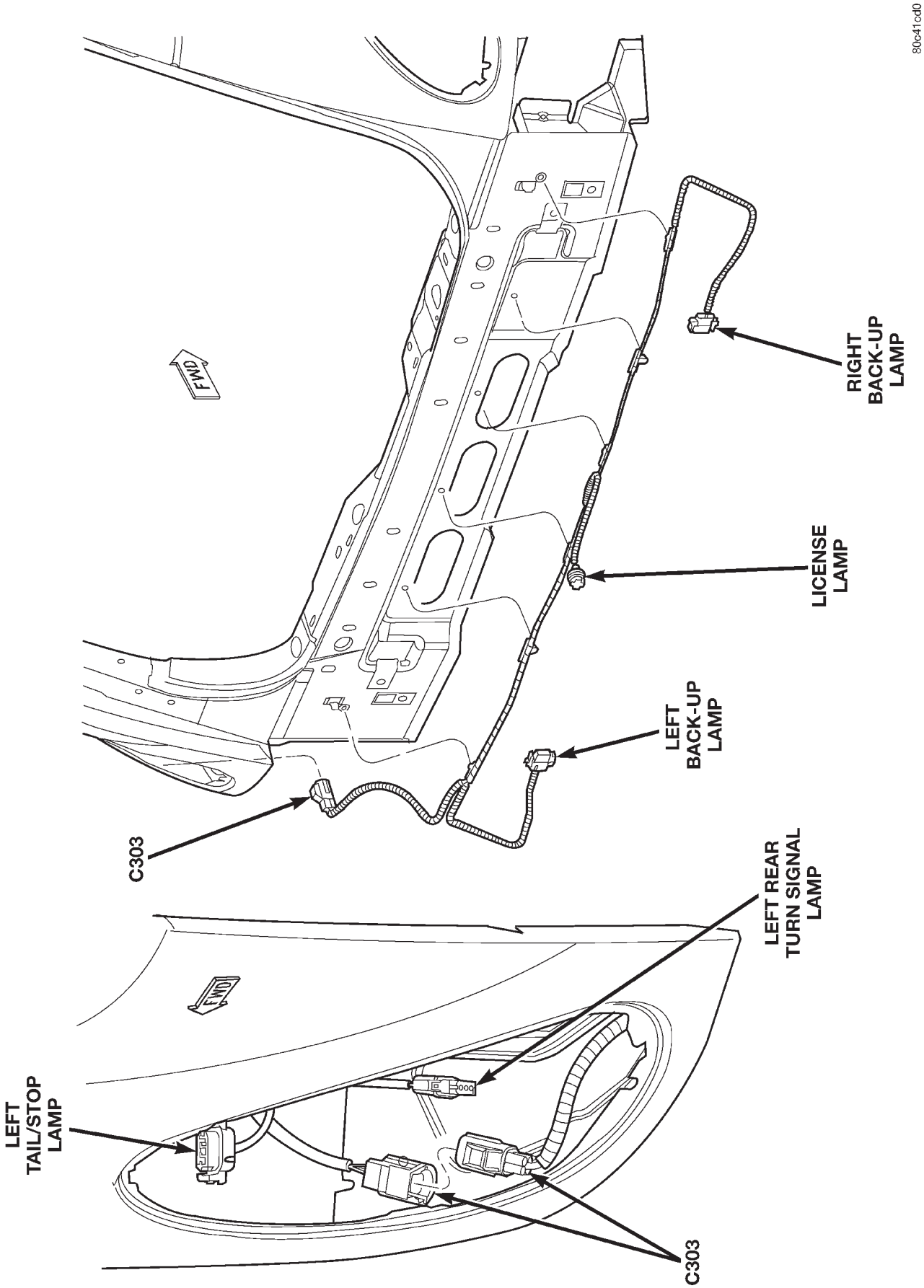

Fig. 34 BACK-UP LAMPS

2001 PT CRUISER

8W-95 SPLICE LOCATIONS

TABLE OF CONTENTS

page

SPLICE LOCATIONS
DESCRIPTION 1

SPLICE LOCATIONS

DESCRIPTION

This section provides illustrations identifying the general location of the splices in this vehicle. A splice index is provided. Use the wiring diagrams in each section for splice number identification. Refer to the index for proper splice number. For splices that are not shown in the figures N/S appears in the Fig. column.

Splice	Location	Fig.
S100	Near T/O for Fuel Injectors	N/S
S101	Near Engine Starter Eyelet	2
S102	Near T/O for Inline C103	3
S103	Near T/O for Powertrain Control Module - C1	4
S104 (Diode)	Near T/O for Engine Starter	3
S105	Near T/O for Powertrain Control Module - C1	4
S106	Near T/O for Camshaft Position Sensor	4
S107	Near T/O for C103, Left Side of Engine	3
S108	Near T/O for EGR Solenoid	4
S109	Near T/O for Engine Oil Pressure Switch	4
S110	Near T/O for Inlet Air Temperature Sensor	4
S111 (MTX)	Near T/O for Back-up Lamp Switch	3
S111 (ATX)	Near T/O for Input Speed Sensor	3
S112	Near T/O for Powertrain Control Module - C1	4
S113	Near T/O for Grounds G102/G103	1
S114	In T/O for Inline C104 (F)	3
S115	Near T/O for Grounds G102/G103	1
S116	Near T/O for Grounds G102/G103	1
S117	Near T/O for Radiator Fan Motor	6
S118	Near T/O for Transmission Control Module	6
S119	Near T/O for Controller Antilock Brake	2
S120	Near T/O for Right Headlamp Assembly	1
S121	Near T/O for Speed Control Servo	5
S122 (IN PDC)	Inside of Power Distribution Center (PDC)	2
S123 (IN PDC)	Inside of Power Distribution Center (PDC)	2
S124 (IN PDC)	Inside of Power Distribution Center (PDC)	2
S125 (IN PDC)	Inside of Power Distribution Center (PDC)	2
S126	Near Data Link Connector	6

SPLICE LOCATIONS (Continued)

Splice	Location	Fig.
S127	Near Brake Lamp Switch	6
S128	Near T/O for Powertrain Control Module - C2	1
S129 (LHD)	Near T/O for Powertrain Control Module - C2	1
S129 (IN PDC) (RHD)	Inside of Power Distribution Center (PDC)	2
S130	Near T/O for Powertrain Control Module - C2	1
S131	Near T/O for Powertrain Control Module - C2	1
S132	Near T/O for Right Front Fog Lamp	1
S133 (IN PDC)	Inside of Power Distribution Center (PDC)	2
S134	Near T/O for Left Front Fog Lamp	6
S135	Near T/O for C101, C102, C104	1
S136	Near T/O for Transmission Control Module	1
S137	Near T/O for Transmission Control Module	N/S
S138	In T/O for Siren	1
S139	Near T/O for Left Front Fog Lamp	1
S140	Near T/O for Grounds G102/G103	1
S141	Near T/O for EVAP Purge Solenoid	1
S142	Near T/O for Radiator Fan Motor	6
S143	Near T/O for Powertrain Control Module - C2	1
S144	Near T/O for Left Low Beam Headlamp	6
S145	Near T/O for Powertrain Control Module - C2	1
S146	Near T/O for Left Headlamp Assembly	1
S200	Near T/O for A/C-Heater Control Switch	8
S201	Near T/O for Brake Tranmission Shift Interlock Solenoid	7
S202	Near T/O for Brake Transmission Shift Interlock Solenoid	7
S203	Near Right Turn Signal Indicator	7
S204	Near T/O for A/C-Heater Control Module	8
S205	Near T/O for Rear Window Defogger Switch	8
S206	Near T/O for Instrument Cluster, C1	7
S207	Between T/O for Cigar Lighter and Parking Brake Switch	12
S208	Near T/O for Passenger Airbag	8
S209	Near T/O for Rear Window Defogger and Rear Wiper Switches	8
S210	Near T/O for Inline C205 to Right Front Door	11
S211	Near T/O for Front Wiper/Washer Switch and Multi-Function Switch	7
S212	Near T/O for Instrument Cluster - C1	7
S213	Near T/O for Rear Window Defogger and Rear Wiper tches	8
S214	Near T/O for Instrument Cluster - C1	7
S215	Near T/O for Brake Shift Interlock Solenoid	10
S216	Near Right Turn Signal Indicator	7
S217	Between T/O for Inline C105 and C106	9
S218	Near Right Turn Signal Indicator	7
S219	Near T/O for Remote Keyless Entry Module	10

SPLICE LOCATIONS (Continued)

Splice	Location	Fig.
S220	Near T/O for Brake Shift Interlock Solenoid	10
S221	Near T/O for Passenger Airbag	7, 10
S222	Near T/O for Sentry Key Immobilizer Module	7
S223	Near T/O for Ground G203	10
S224	Between S215 and S238	10
S225	Between T/O for Brake Shift Interlock Solenoid and Ignition Switch	7
S226	Between T/O for Brake Shift Interlock Solenoid and Ignition Switch	7
S227 (LHD)	In T/O for Inline C203	11
S227 (RHD)	In T/O for Inline C202	9
S228	Near T/O for Power Mirror Switch	9
S229	Near T/O for Grounds G200 and G203	10
S230	In T/O for Inline C203	11
S231	Near T/O for Instrument Cluster - C1	10
S232	Near T/O for Rear Window Defogger and Rear Wiper Switches	8
S233	Near T/O for Turn Signal Indicators	10
S234	Near T/O for Brake Transmission Shift Interlock Solenoid	10
S235 (LHD)	Near T/O for Inline C201	11
S235 (RHD)	Near T/O for Inline C200	9
S236	Near T/O for Remote Keyless Entry Module	10
S237	Near T/O for Instrument Cluster - C1	7
S238	Near T/O for Brake Transmission Shift Interlock Solenoid	10
S239	Near T/O for Ground G200/G203	10
S240	Near T/O for Ground G201	9
S241	Near T/O for Ground G200/G203	10
S242	Near T/O for Power Mirror Switch	9
S243	Near T/O for Remote Keyless Entry Module	10
S244	Near T/O for Visor/Vanity Lamp	N/S
S245	In T/O for Ignition Switch	7
S246	Between Splices S248 and S244	N/S
S247	Near T/O for Brake Transmission Shift Interlock Solenoid	10
S248	Near T/O for Overhead Console	N/S
S249	In T/O for Overhead Console	N/S
S250	Near T/O for Power Mirror Switch	9
S251	Near T/O for Inline C203	11
S252	Near T/O for Inline C202	9
S253	Near T/O for Inline C202	9
S254	Near T/O for Instrument Cluster - C1	7
S300	Near T/O for Power Seat Switch	N/S
S301	Front of Left Rear Wheel Housing	13
S302	In Trough Near Left Rear Door	13

SPLICE LOCATIONS (Continued)

Splice	Location	Fig.
S303	Base of Right Rear Wheel Housing	15
S304	Top of Left Rear Wheel Housing	14
S305	Near T/O for Left Rear Door Ajar Switch	14
S306	Near T/O for License Lamp	N/S
S307	Near T/O for Left Rear Door Ajar Switch	14
S308	Near T/O for License Lamp	N/S
S309 (LEFT)	Near T/O for Left/Right Front Door Lock Switch	16
S310	Near T/O for Rear Window Defogger (Ground)	N/S
S311 (RIGHT)	Near T/O for Left/Right Front Door Lock Switch	16
S312	Near T/O for Licence Lamp	N/S
S313	Near T/O for Passenger Heated Seat Module	N/S
S314	Near T/O for Passenger Heated Seat Module	N/S
S315	Near T/O for Passenger Heated Seat Module	N/S
S316	Near T/O for Passenger Heated Seat Module	N/S

SPLICE LOCATIONS (Continued)

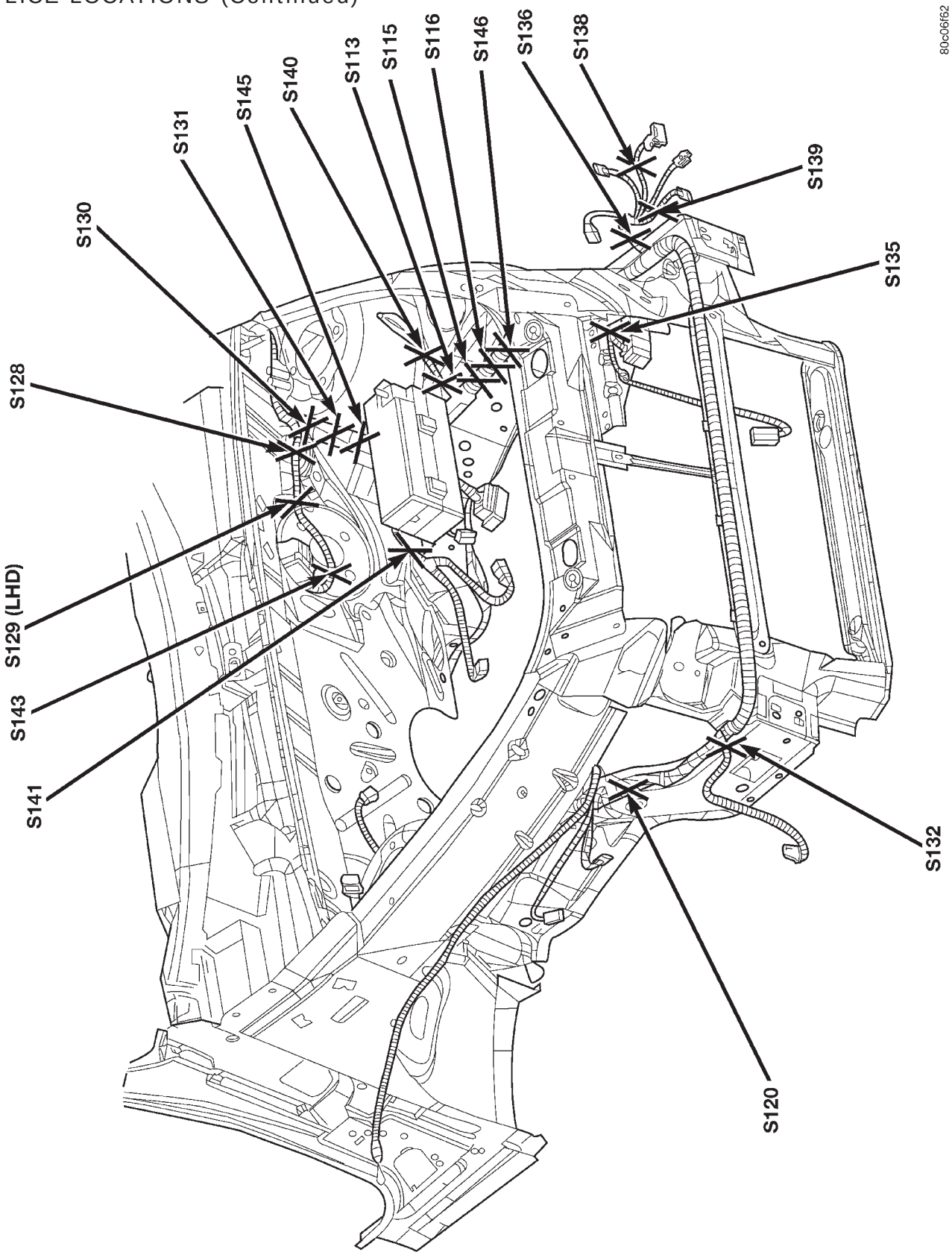

Fig. 1 ENGINE COMPARTMENT SPLICES

SPLICE LOCATIONS (Continued)

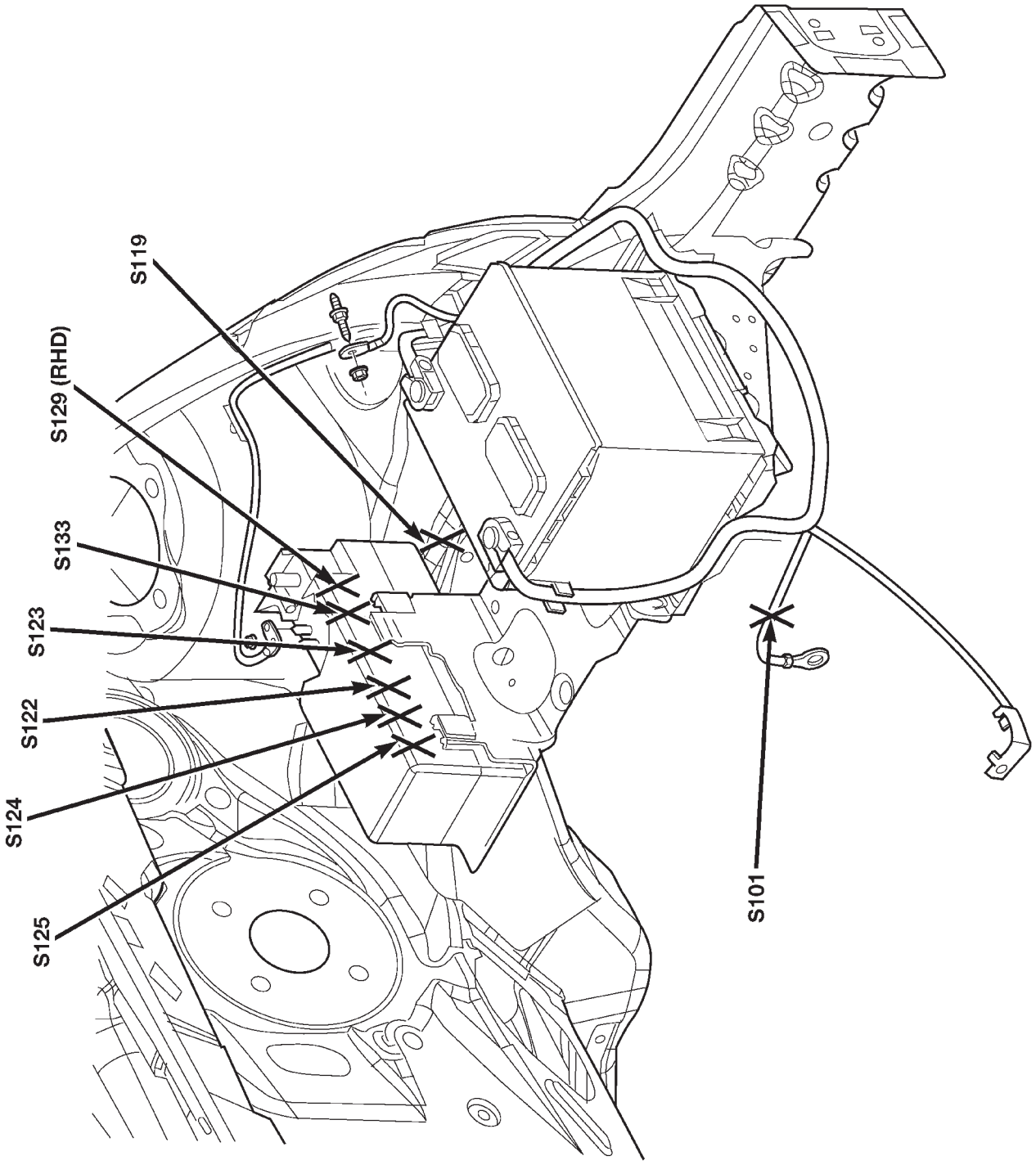

Fig. 2 LEFT ENGINE COMPARTMENT SPLICES

SPLICE LOCATIONS (Continued)

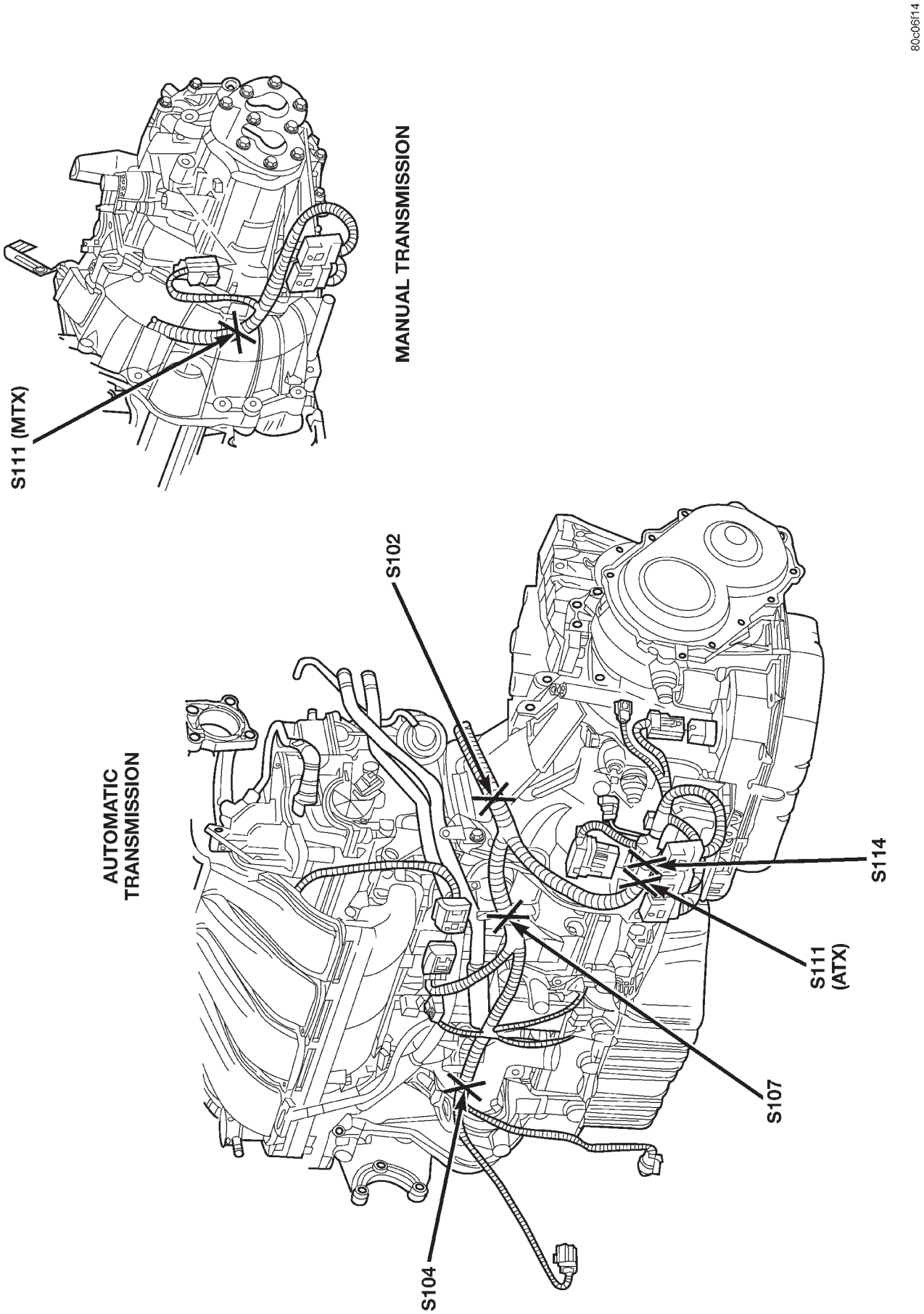

Fig. 3 TRANSMISSION SPLICES

SPLICE LOCATIONS (Continued)

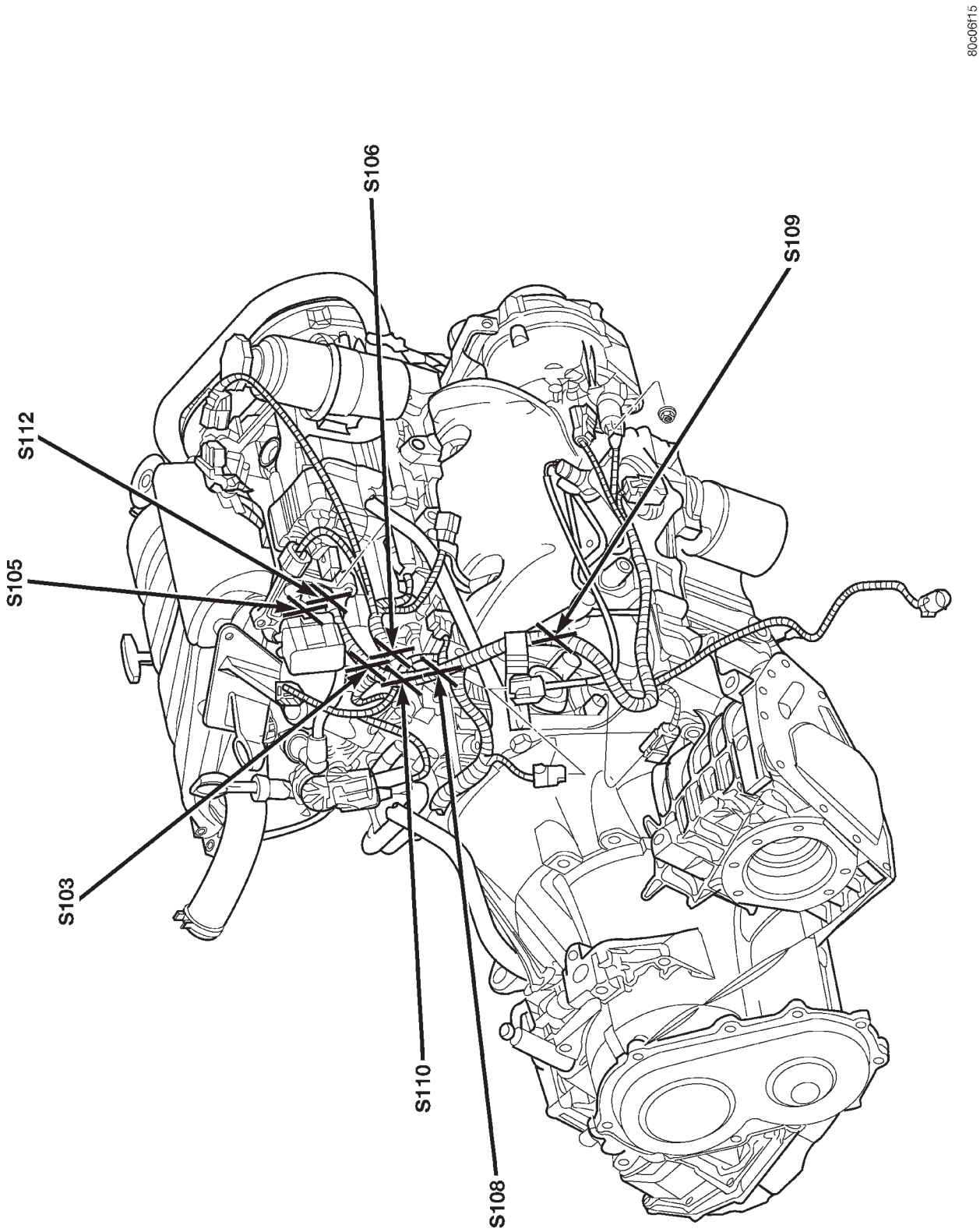

Fig. 4 ENGINE/TRANSMISSION SPLICES

SPLICE LOCATIONS (Continued)

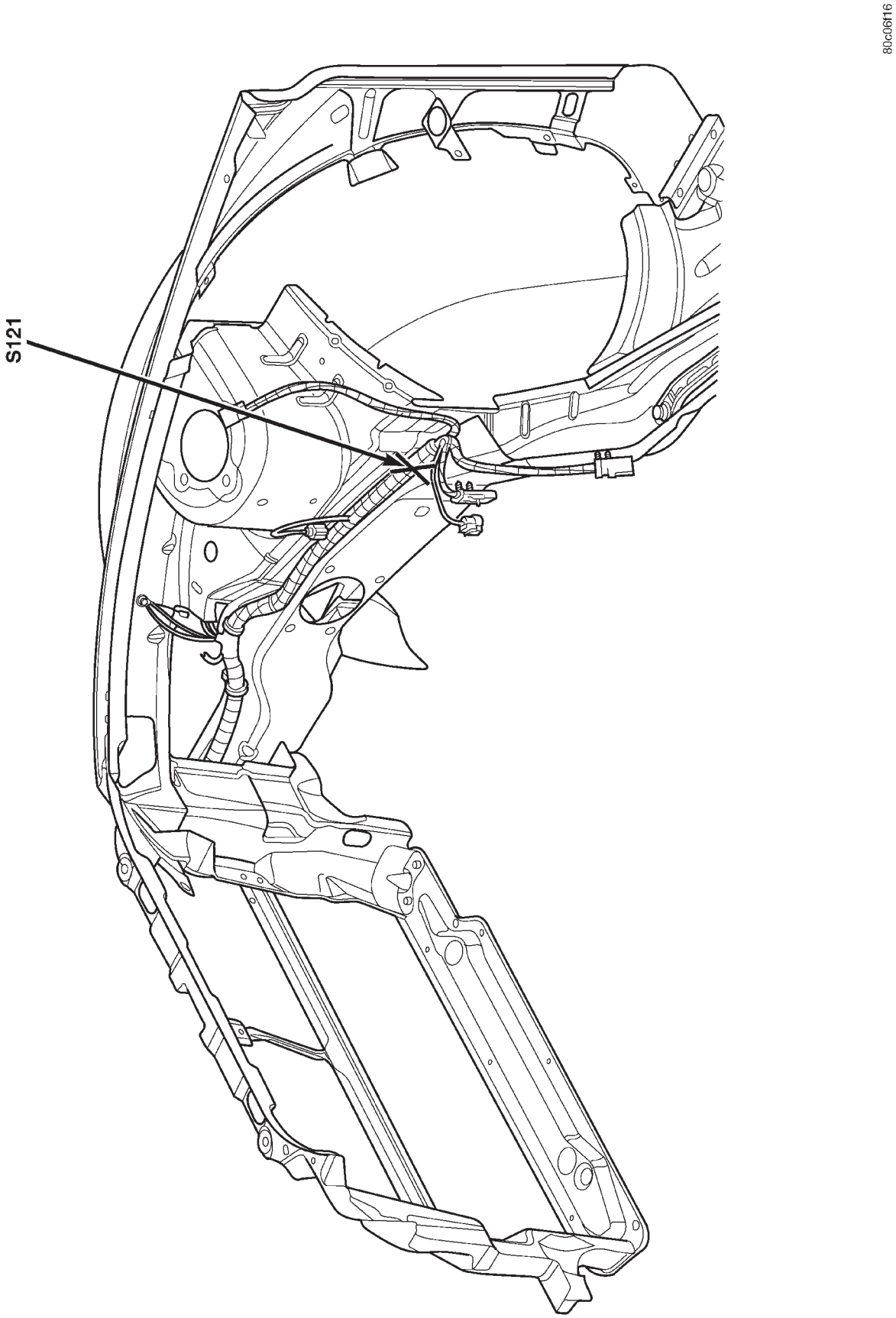

Fig. 5 ENGINE COMPARTMENT SPLICES RIGHT SIDE

SPLICE LOCATIONS (Continued)

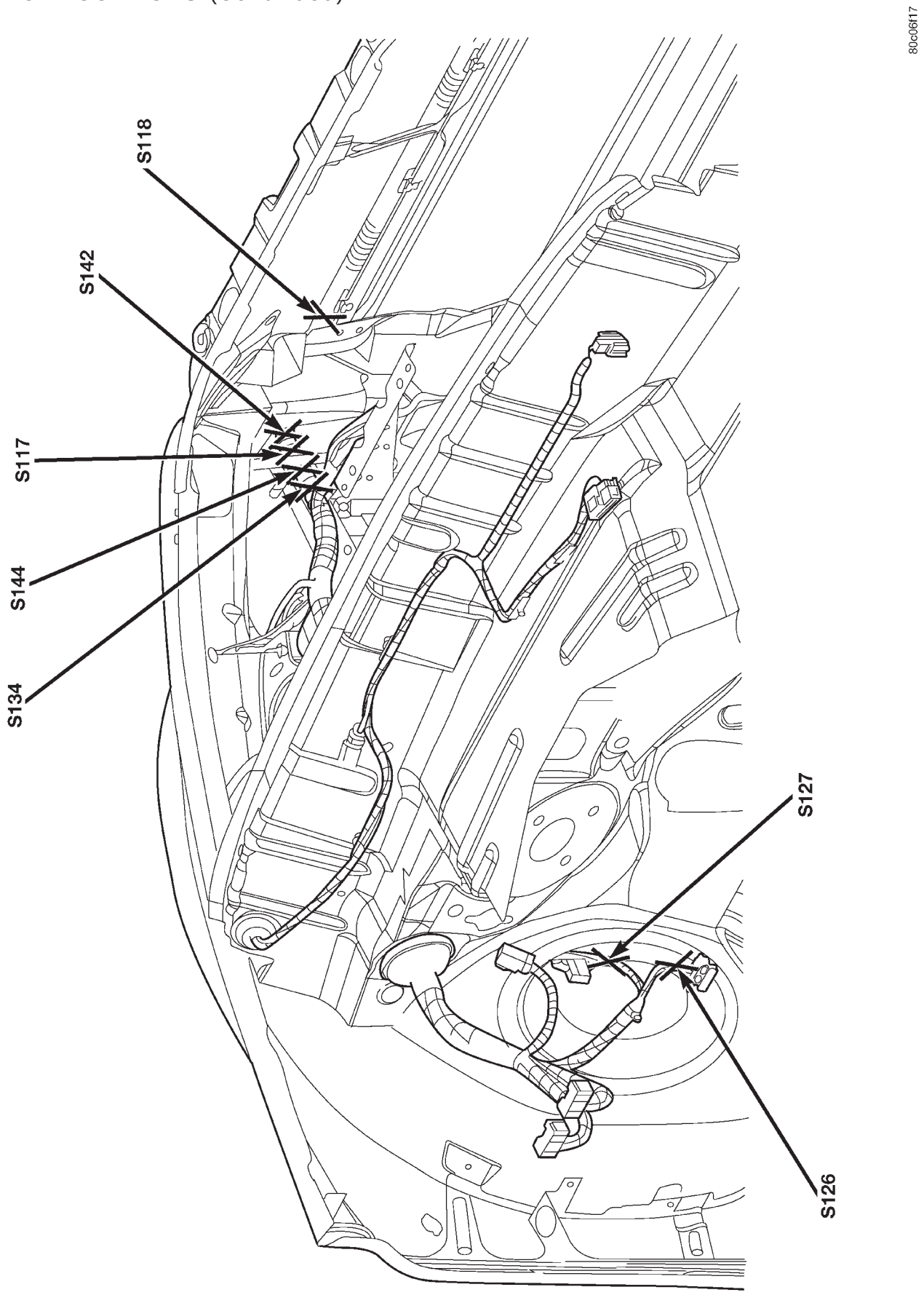

Fig. 6 LEFT COWL PANEL SPLICES

SPLICE LOCATIONS (Continued)

80c06f64

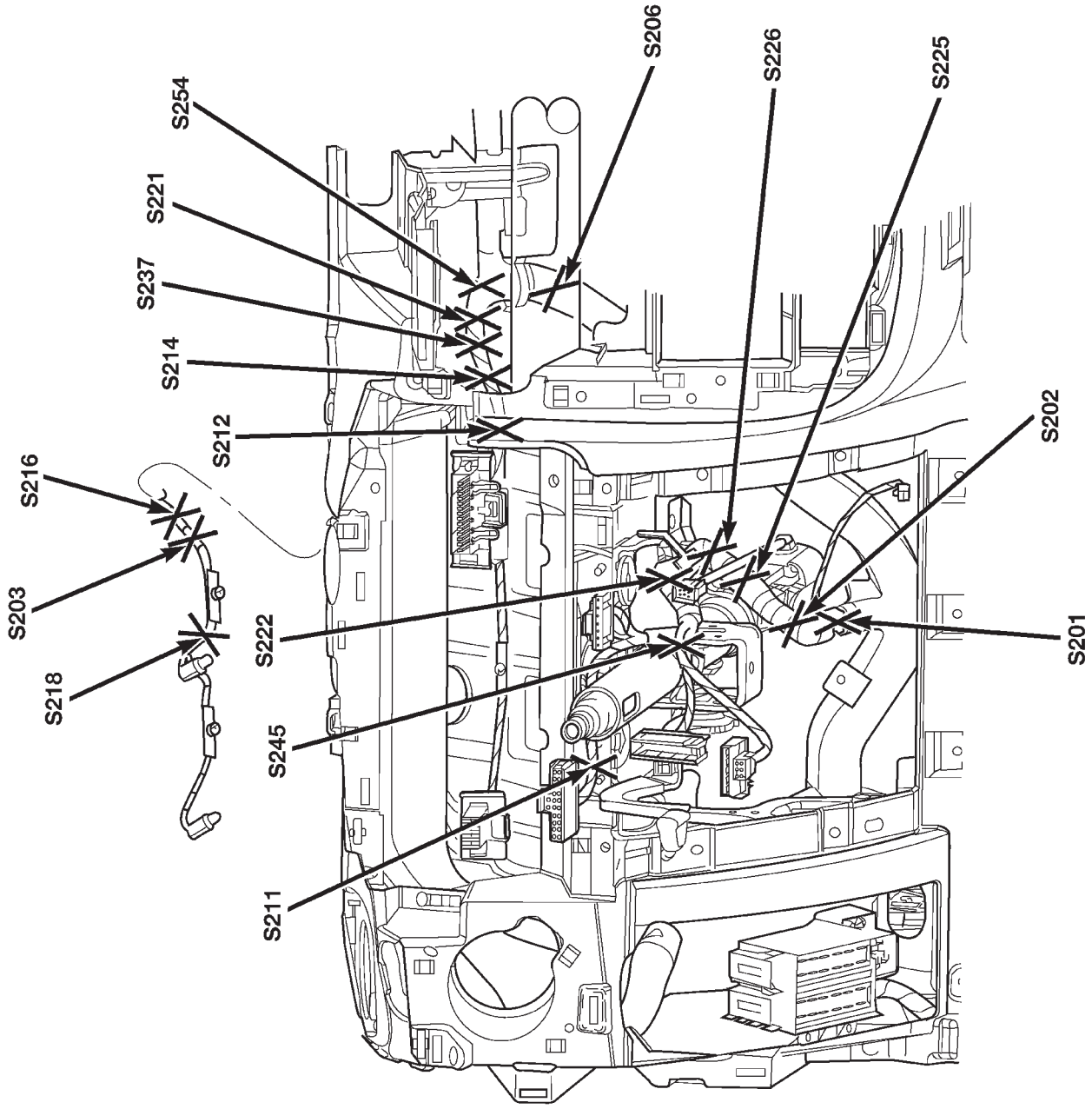

Fig. 7 LEFT INSTRUMENT PANEL SPLICES

SPLICE LOCATIONS (Continued)

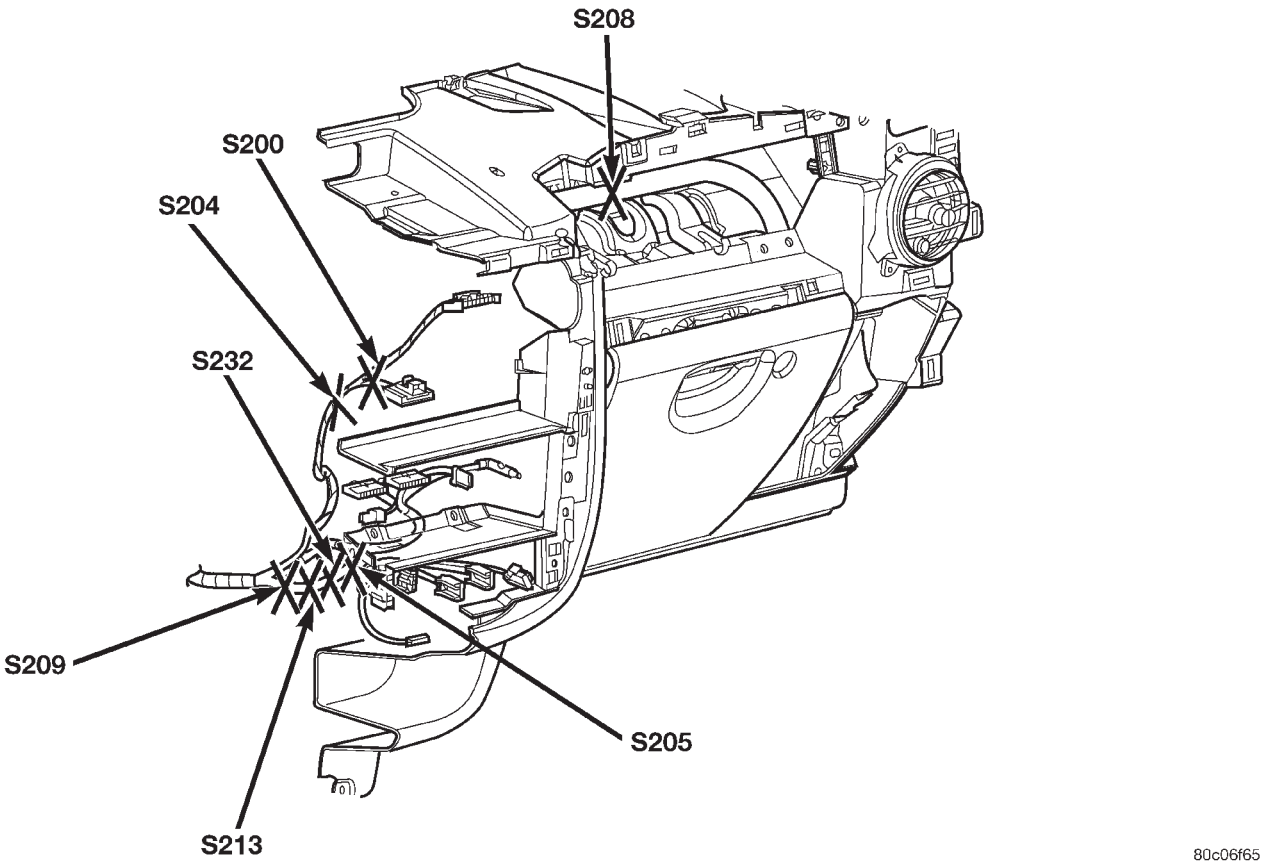

Fig. 8 CENTER AND RIGHT INSTRUMENT PANEL SPLICES

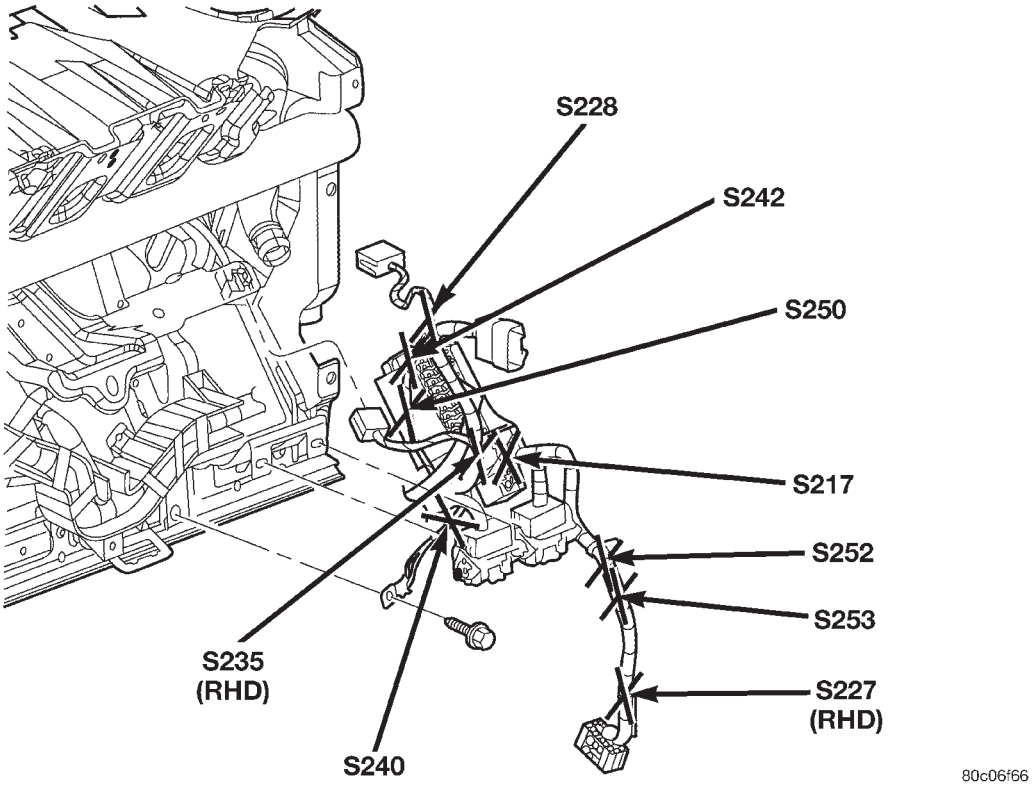

Fig. 9 LEFT REAR INSTRUMENT PANEL SPLICES

SPLICE LOCATIONS (Continued)

80c06f67

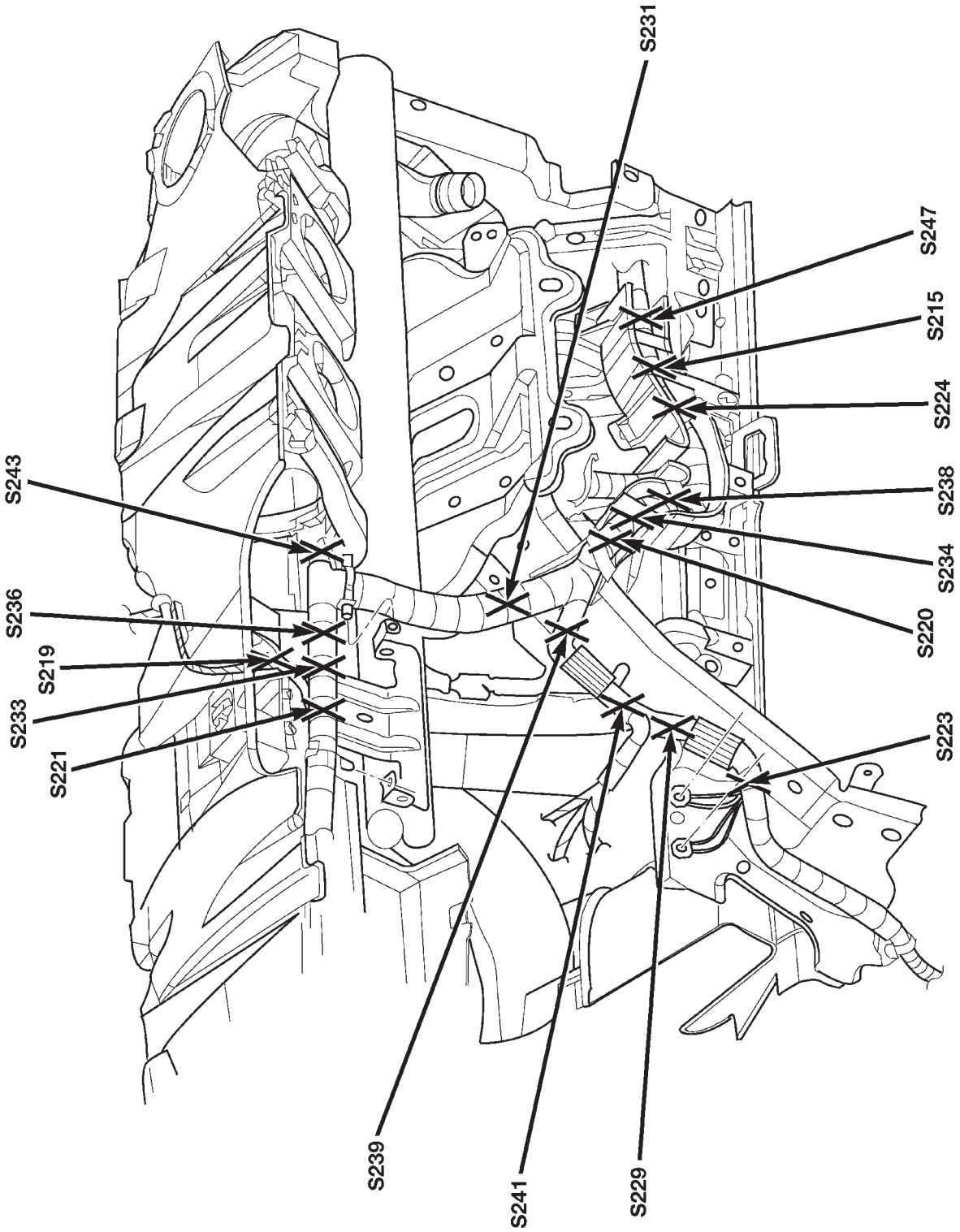

Fig. 10 CENTER REAR INSTRUMENT PANEL

SPLICE LOCATIONS (Continued)

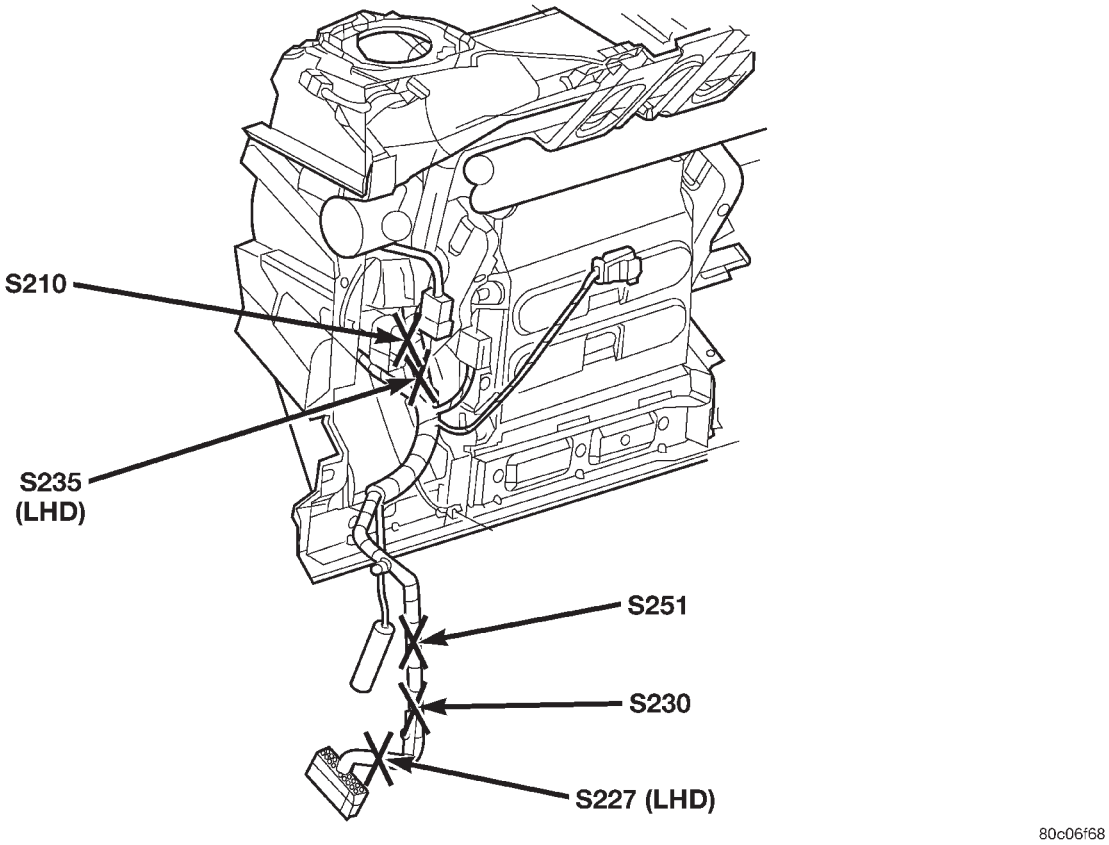

Fig. 11 RIGHT REAR INSTRUMENT PANEL SPLICES

SPLICE LOCATIONS (Continued)

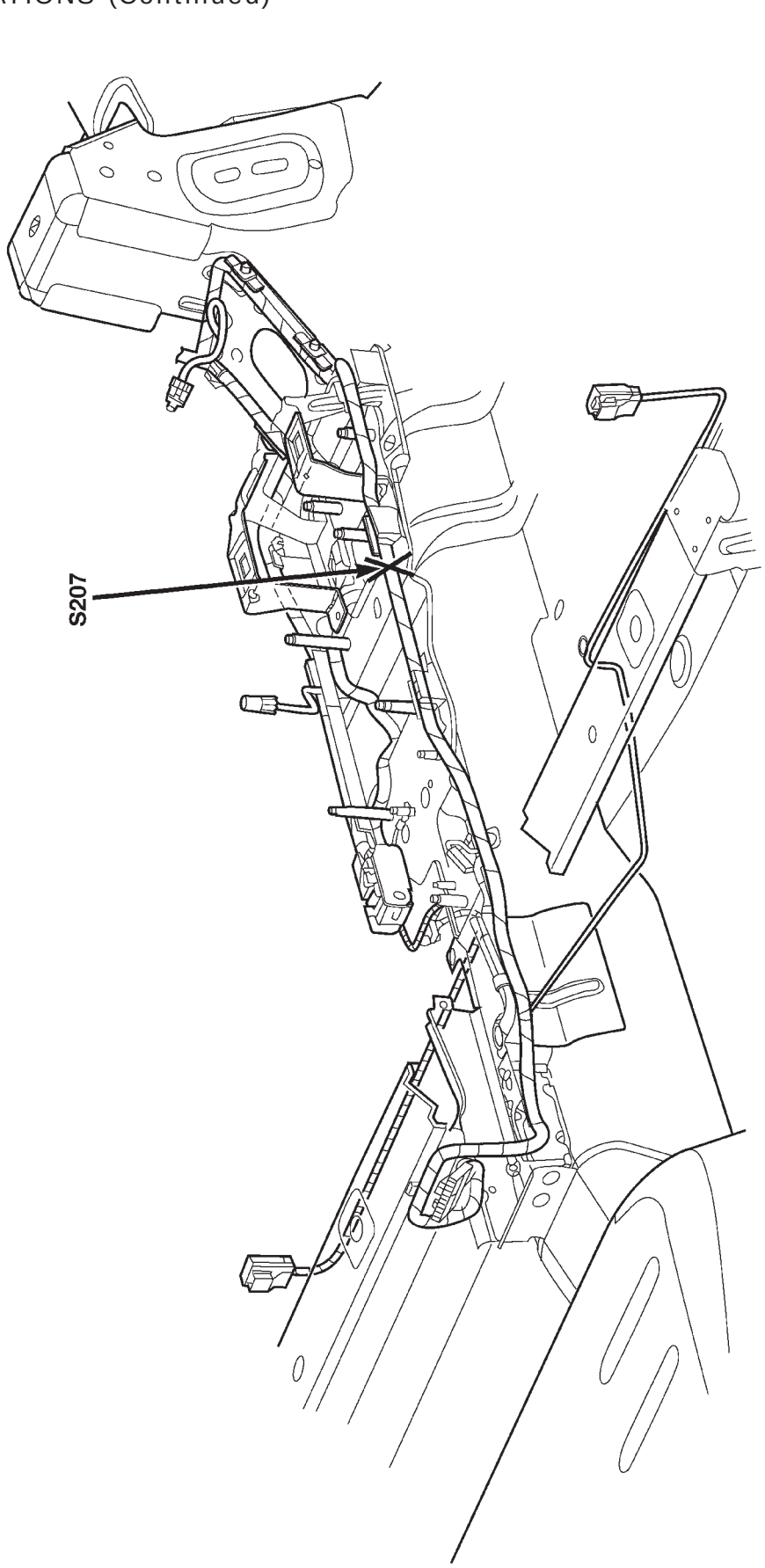

Fig. 12 CONSOLE SPLICES

SPLICE LOCATIONS (Continued)

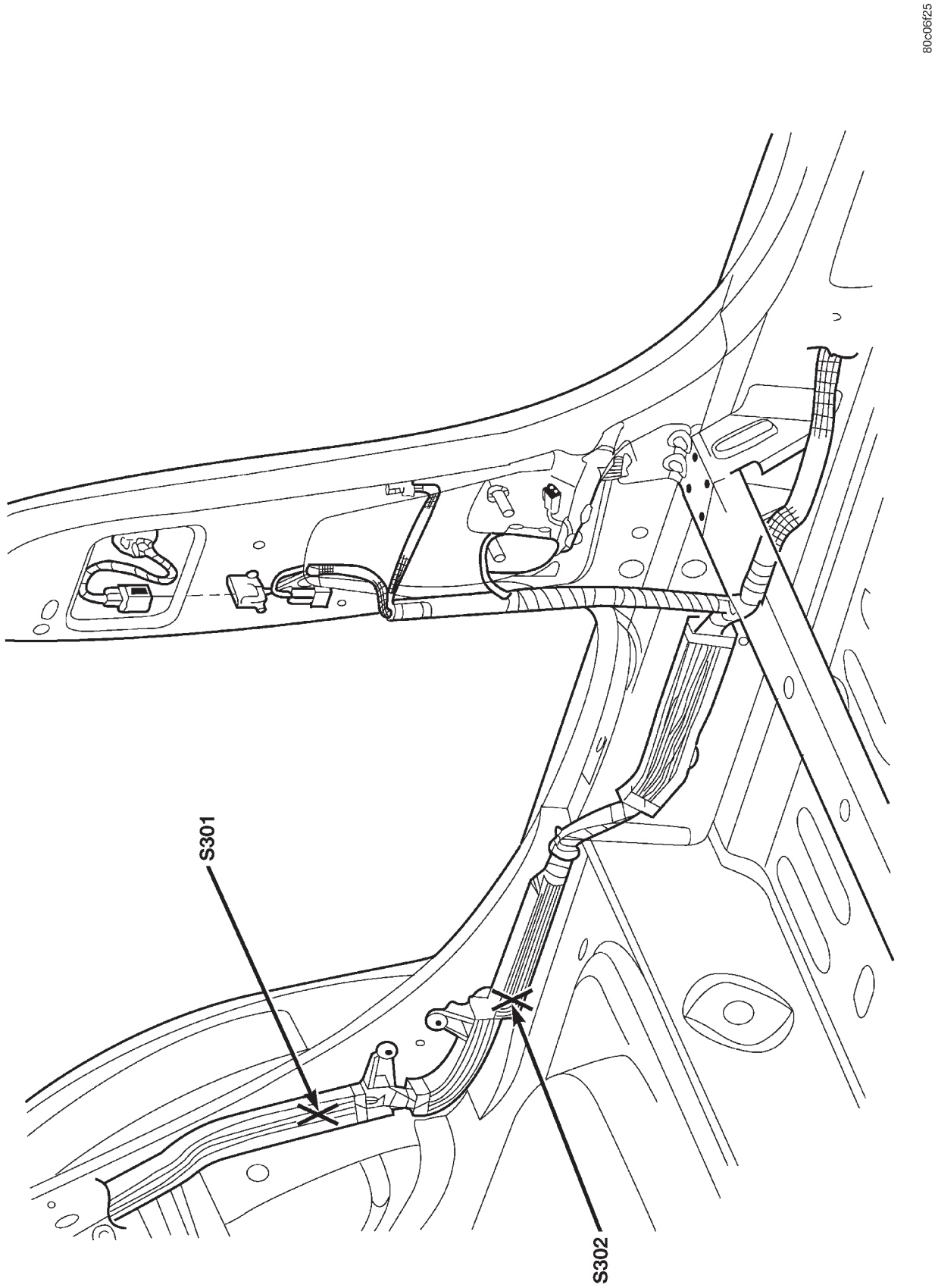

Fig. 13 LEFT REAR BODY SPLICES

SPLICE LOCATIONS (Continued)

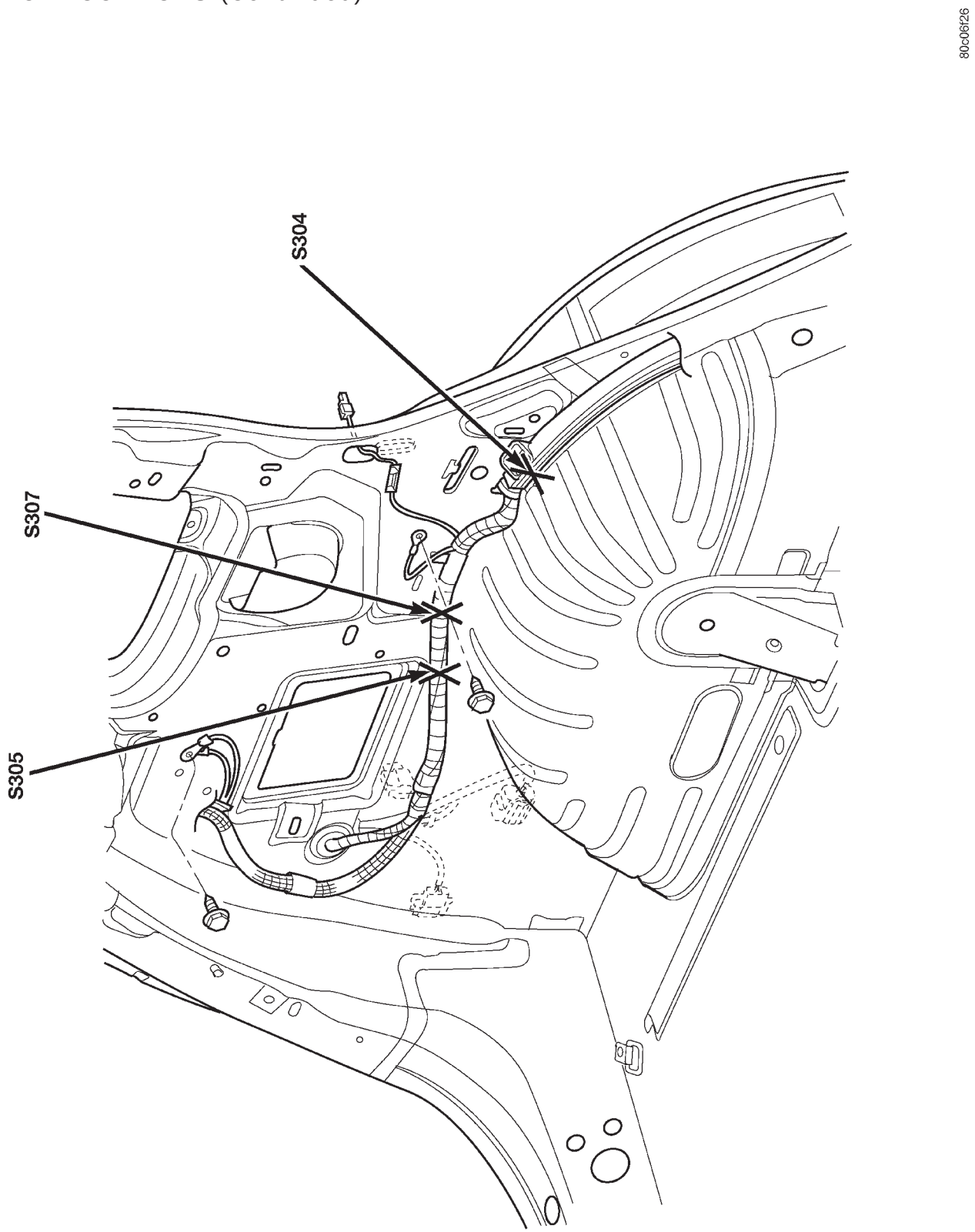

Fig. 14 LEFT SIDE CARGO SPLICES

SPLICE LOCATIONS (Continued)

80c06f27

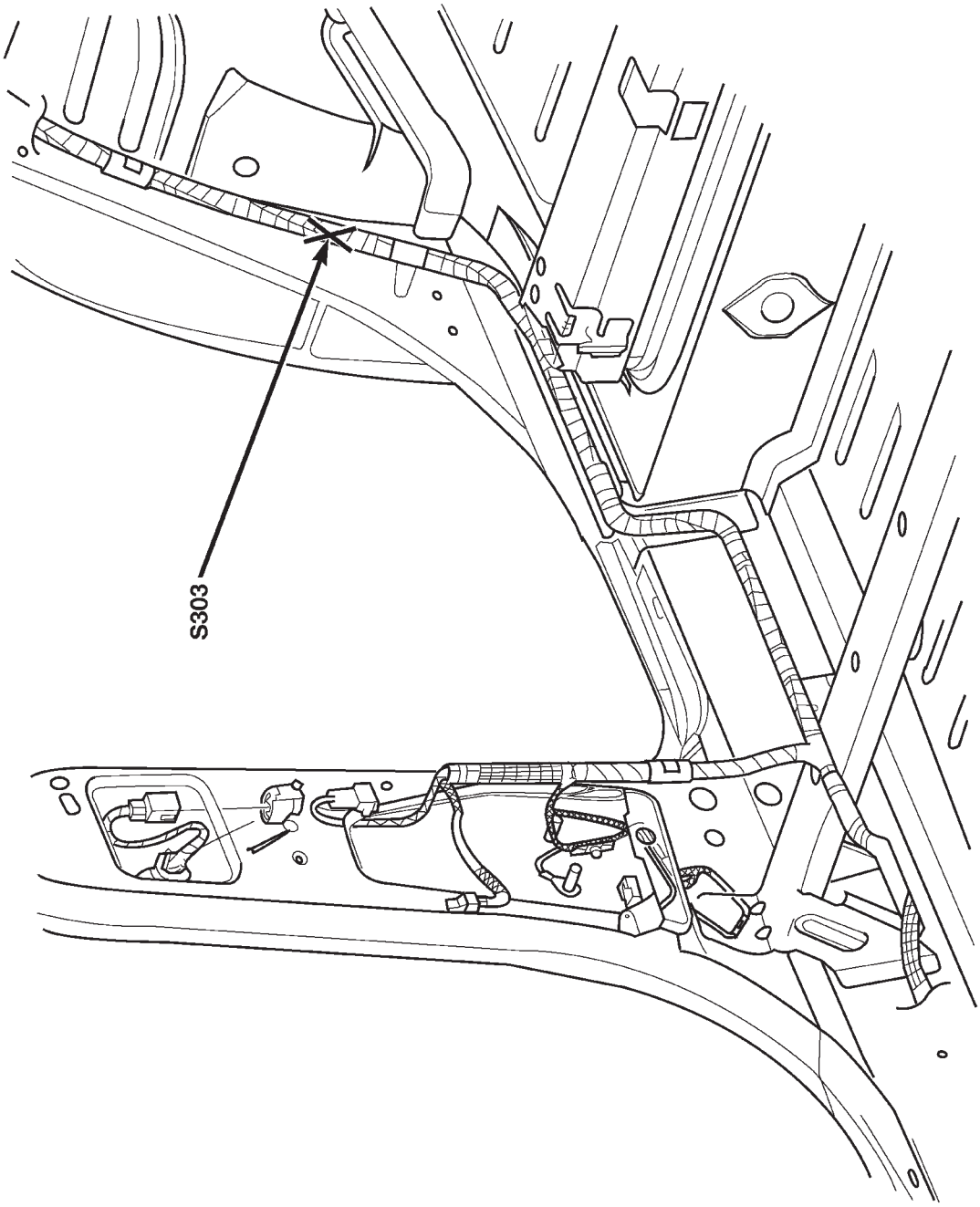

Fig. 15 RIGHT REAR BODY SPLICES

SPLICE LOCATIONS (Continued)

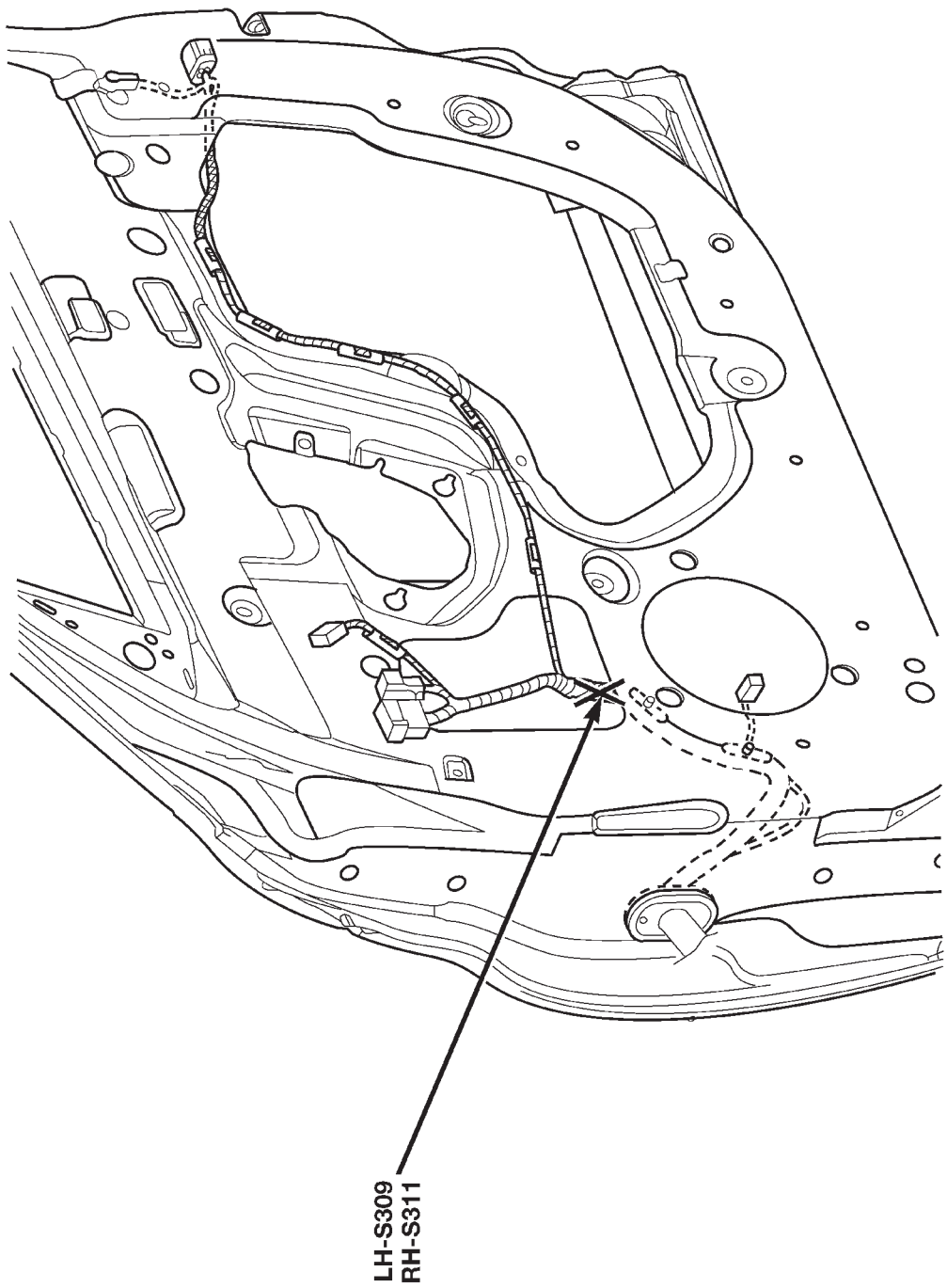

Fig. 16 LEFT/RIGHT DOOR SPLICES

2001 PT CRUISER

ENGINE

TABLE OF CONTENTS

page

DESCRIPTION AND OPERATION
ENGINE 2
CYLINDER BLOCK AND BEDPLATE 2
BALANCE SHAFTS AND CARRIER ASSEMBLY 2
CRANKSHAFT 2
PISTON AND CONNECTING ROD 3
CYLINDER HEAD 3
CAMSHAFT 4
VALVE AND VALVE SPRING 4
INTAKE MANIFOLD 4
EXHAUST MANIFOLD 4
ENGINE LUBRICATION SYSTEM 5
ENGINE MOUNT 5
DIAGNOSIS AND TESTING
ENGINE DIAGNOSIS—INTRODUCTION 5
ENGINE DIAGNOSIS—PERFORMANCE 7
ENGINE DIAGNOSIS—MECHANICAL 8
HYDROSTATIC LOCKED ENGINE 10
INTAKE MANIFOLD LEAKAGE DIAGNOSIS 10
CYLINDER COMPRESSION PRESSURE TEST . . 10
CYLINDER COMBUSTION PRESSURE LEAKAGE TEST 11
CYLINDER HEAD GASKET FAILURE DIAGNOSIS 11
LASH ADJUSTER (TAPPET) NOISE DIAGNOSIS 12
ENGINE OIL LEAK INSPECTION 12
ENGINE OIL PRESSURE 13
SERVICE PROCEDURES
ENGINE OIL LEVEL CHECK 13
ENGINE OIL AND FILTER CHANGE 13
FORM-IN-PLACE GASKETS & SEALERS 14
ENGINE GASKET SURFACE PREPARATION 15
REPAIR OF DAMAGED OR WORN THREADS . . 16
CYLINDER BORE—HONING 16
CYLINDER BORE AND PISTON—SIZING 16
PISTON RING—FITTING 17
CONNECTING ROD AND BEARING—FITTING . . 18
MAIN BEARING—FITTING 19
CRANKSHAFT END PLAY 21
CAMSHAFT END PLAY 21
CAMSHAFT/CRANKSHAFT SYNCHRONIZATION 21
REMOVAL AND INSTALLATION
TORQUE STRUTS 22
ENGINE MOUNT—LEFT 24
ENGINE MOUNT—RIGHT 25
STRUCTURAL COLLAR 25
ENGINE ASSEMBLY 27
INTAKE MANIFOLD—UPPER 31
INTAKE MANIFOLD—LOWER 33
EXHAUST MANIFOLD 35
CRANKSHAFT DAMPER 36
TIMING BELT COVER 37
TIMING BELT 39
TIMING BELT TENSIONER ASSEMBLY 42
CYLINDER HEAD COVER 43
CAMSHAFT 45
CAMSHAFT OIL SEAL—FRONT 46
CAMSHAFT FOLLOWER 47
HYDRAULIC LASH ADJUSTER 48
VALVE SPRINGS AND VALVE SEALS IN VEHICLE 48
CYLINDER HEAD 49
VALVE AND VALVE SPRING 51
OIL PAN 52
BALANCE SHAFTS AND CARRIER ASSEMBLY 52
CRANKSHAFT OIL SEAL—FRONT 56
CRANKSHAFT OIL SEAL—REAR 57
CRANKSHAFT 59
PISTON AND CONNECTING ROD 60
OIL PUMP 62
OIL FILTER 64
OIL FILTER ADAPTER 64
OIL PRESSURE SWITCH 64
ENGINE CORE PLUGS 65
DISASSEMBLY AND ASSEMBLY
OIL PUMP 65
CLEANING AND INSPECTION
INTAKE MANIFOLD 66
EXHAUST MANIFOLD 66
CYLINDER HEAD 66

VALVE AND VALVE SPRING 67
OIL PUMP. 67
CRANKSHAFT 69
CYLINDER BLOCK 70
CAMSHAFT FOLLOWER 70
ADJUSTMENTS
ENGINE TORQUE STRUT ADJUSTMENT 70
SPECIFICATIONS
ENGINE OIL 72
2.4L ENGINE. 72
TORQUE 75
SPECIAL TOOLS
2.4L ENGINE. 76

DESCRIPTION AND OPERATION

ENGINE

DESCRIPTION

The 2.4 Liter (148 cu. in.) in-line four cylinder engine is a double over head camshaft with hydraulic lifters and four valve per cylinder design. The engine is free-wheeling; meaning it has provisions for piston-to-valve clearance. However valve-to-valve interference can occur, if camshaft are rotated independently.

The cylinders are numbered from front of the engine to the rear. The firing order is 1–3–4–2.

The engine identification number is located on the rear of the cylinder block (Fig. 1).

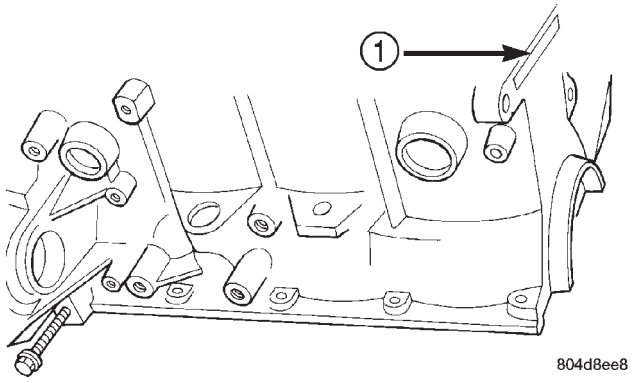

Fig. 1 Engine Identification

1 – ENGINE IDENTIFICATION LOCATION

CYLINDER BLOCK AND BEDPLATE

DESCRIPTION

The cast iron cylinder block is a two-piece assembly, encompassing the cylinder block and bedplate. The bedplate incorporates the main bearing caps and bolts to the cylinder block. This design offers a much stronger lower end and increased cylinder block rigidity. The rear oil seal retainer is integral with the block. The bedplate and block are serviced as an assembly.

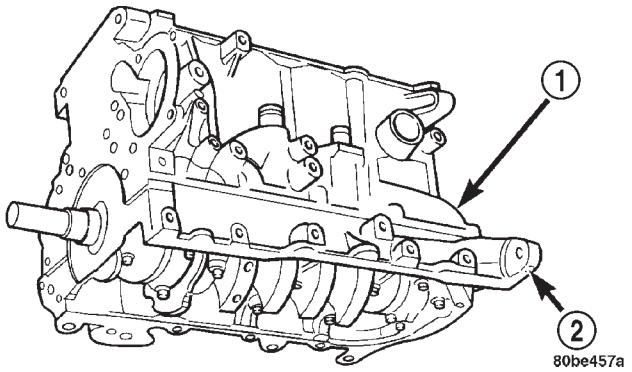

Fig. 2 Cylinder Block and Bedplate

1 – CYLINDER BLOCK
2 – BEDPLATE

BALANCE SHAFTS AND CARRIER ASSEMBLY

DESCRIPTION

The 2.4L engine is equipped with two nodular cast iron balance shafts installed in a cast aluminum carrier (Fig. 3). The balance shafts and carrier mount to the cylinder block/bedplate.

OPERATION

The balance shafts are driven by the crankshaft by a roller chain and sprockets. The balance shafts are connected by helical gears. The dual-counter rotating shafts decrease second order vertical shaking forces caused by component movement.

CRANKSHAFT

DESCRIPTION

The crankshaft is made of nodular cast iron and includes five main bearing journals and four connecting rod journals (Fig. 4). The number three journal is the location for the thrust bearing. The mains and connecting rod journals have undercut fillet radiuses that are rolled for added strength. To optimize bearing loading, eight counterweights are used.

OPERATION

The crankshaft transfers force generated by combustion within the cylinder to the flywheel or flexplate.

DESCRIPTION AND OPERATION (Continued)

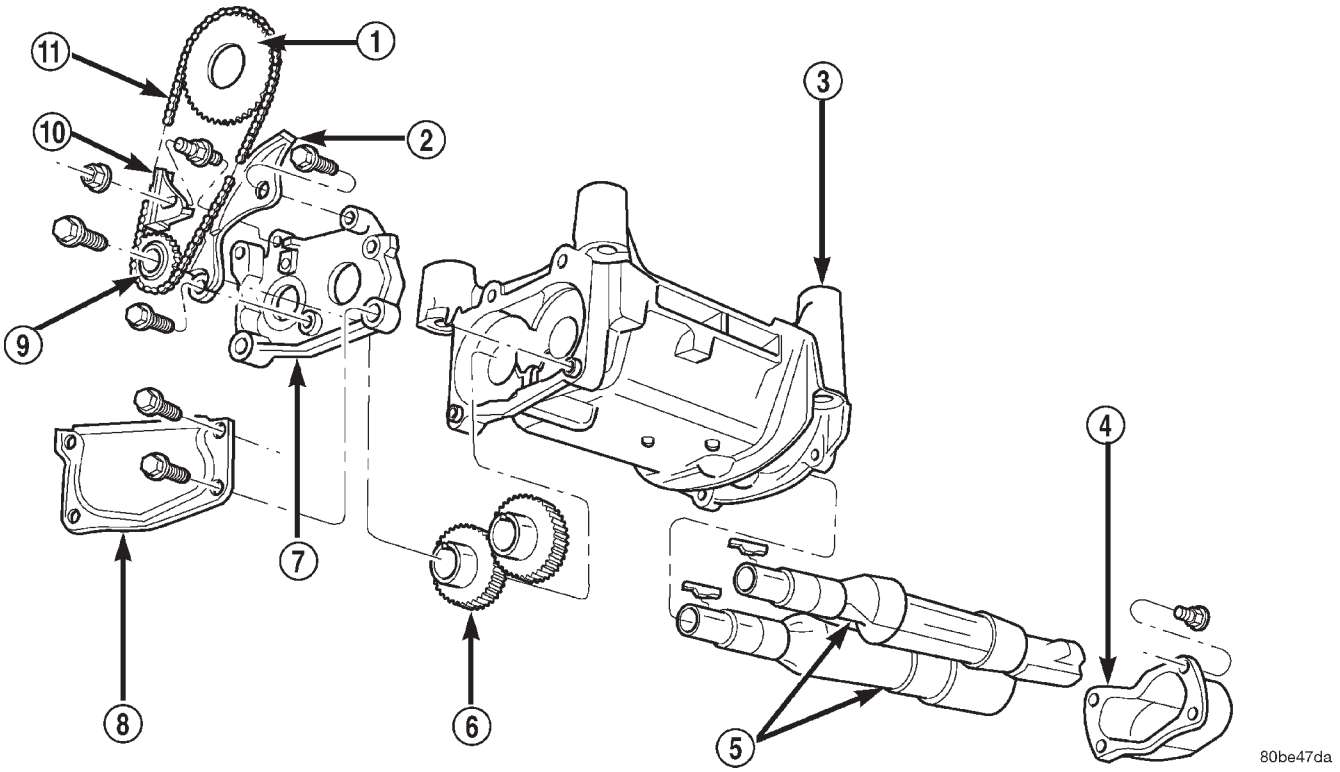

Fig. 3 Balance Shafts and Carrier Assembly

1 – SPROCKET
2 – TENSIONER
3 – CARRIER
4 – REAR COVER
5 – BALANCE SHAFTS
6 – GEARS
7 – GEAR COVER
8 – CHAIN COVER
9 – SPROCKET
10 – GUIDE
11 – CHAIN

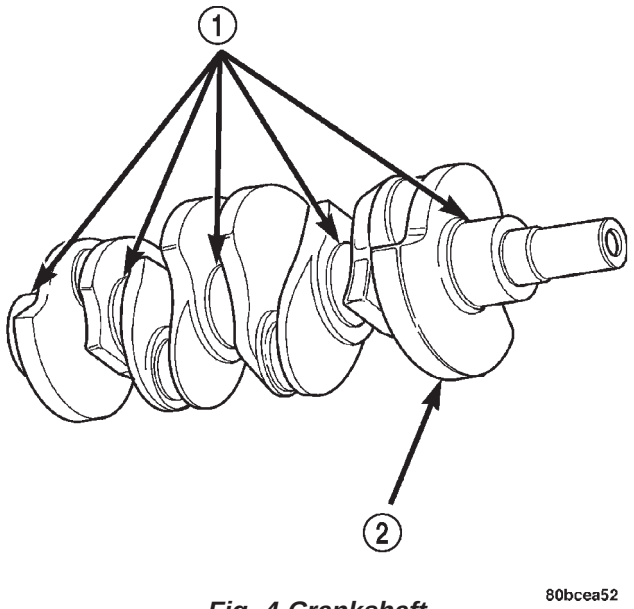

Fig. 4 Crankshaft

1 – MAIN BEARING JOURNALS
2 – COUNTER BALANCE WEIGHTS

PISTON AND CONNECTING ROD

DESCRIPTION

The pistons are made of a cast aluminum alloy. The pistons have pressed-in pins attached to forged powdered metal connecting rods. The pistons pin is offset 1 mm (0.0394 in.) towards the thrust side of the piston. The connecting rods are a cracked cap design and are not repairable. Hex head cap screws are used to provide alignment and durability in the assembly. The pistons and connecting rods are serviced as an assembly

OPERATION

The piston and connecting rod is the link between the combustion force to the crankshaft.

CYLINDER HEAD

DESCRIPTION

The cross flow designed, aluminum cylinder head contains dual over-head camshafts with four valves

DESCRIPTION AND OPERATION (Continued)

per cylinder. The valves are arrange in two in-line banks. The intake valves face toward the front of the vehicle. The exhaust valves face the dash panel. The cylinder head incorporates powdered metal valve guides and seats. The cylinder head is sealed to the block using a multi-layer steel head gasket and retaining bolts.

Integral oil galleries providing lubrication passages to the hydraulic lash adjusters, camshafts, and valve mechanisms.

OPERATION

The cylinder head closes the combustion chamber, allowing the pistons to compress the air/fuel mixture for ignition. The valves are actuated by the lobe profiles on the camshaft to open and close at specified duration to either allow clean air in the combustion chamber or the exhaust gases out; depending on the stroke of the engine.

CAMSHAFT

DESCRIPTION

Both nodular iron camshafts have six bearing journal surfaces and two cam lobes per cylinder (Fig. 5). Flanges at the rear journals control camshaft end play. Provision for a cam position sensor is located on the intake camshaft on the rear of the cylinder head. A hydrodynamic oil seal is used for oil control at the front of the camshaft.

OPERATION

The camshaft is driven by the crankshaft via drive sprockets and belt. The camshaft has precisely machined lobes to provide accurate valve timing and duration.

VALVE AND VALVE SPRING

DESCRIPTION

The valves are made of heat resistant steel. They have chrome plated stems to prevent scuffing. Viton rubber valve stem seals are integral with the spring seats. The valves have three-bead lock keepers to retain springs and to promote valve rotation.

OPERATION

The four valves per cylinder (two intake and two exhaust) are opened by using roller camshaft followers which pivot on hydraulic lash adjusters.

INTAKE MANIFOLD

DESCRIPTION

The intake manifold is a two-piece design and is made of a composite material (Fig. 6). The manifold attaches to the cylinder head with fasteners. The manifold's four tuned intake runners curve over the top of the cylinder head and connect to a plenum chamber. This design enhances low and mid-range torque and also provides less induction noise (rumble).

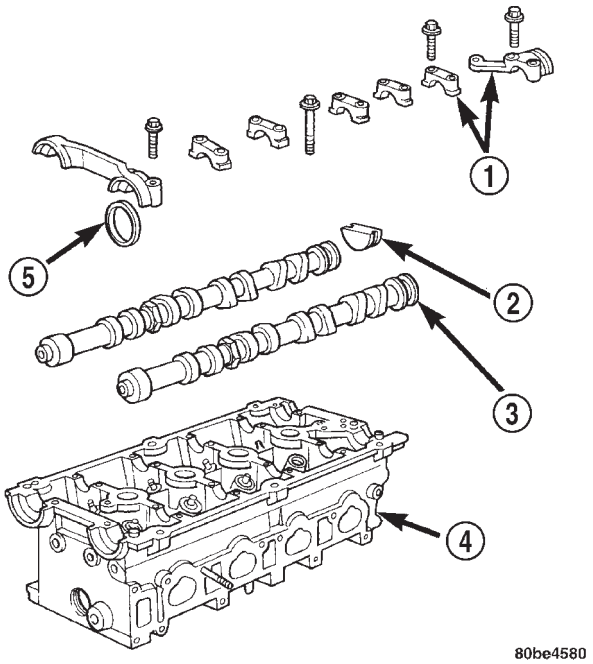

Fig. 5 Camshafts

1 – CAMSHAFT BEARING CAPS
2 – PLUG
3 – CAMSHAFT
4 – CYLINDER HEAD
5 – CAMSHAFT OIL SEAL

OPERATION

The intake manifold meters and delivers air to the combustion chambers. This air allows the fuel delivered by the fuel injectors to ignite, thus producing power.

EXHAUST MANIFOLD

DESCRIPTION

The exhaust manifold (Fig. 7) is made of nodular cast iron for strength and high temperatures. The manifold attaches to the cylinder head.

OPERATION

The exhaust manifold collects the exhaust gasses exiting the combustion chambers. Then it channels the exhaust gasses to the exhaust pipe attached to the manifold.

DESCRIPTION AND OPERATION (Continued)

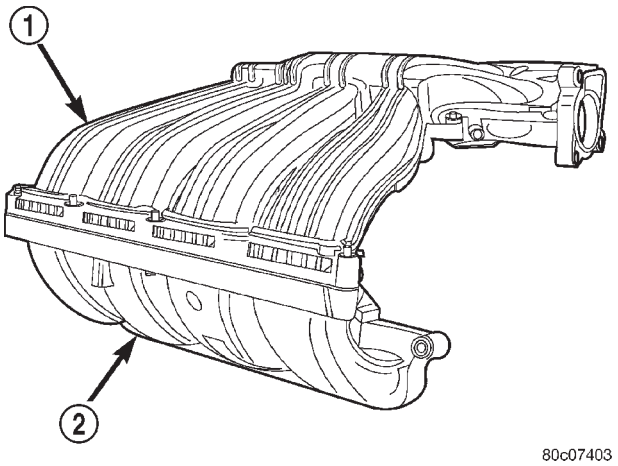

Fig. 6 Intake Manifold

1 – UPPER INTAKE MANIFOLD
2 – LOWER INTAKE MANIFOLD

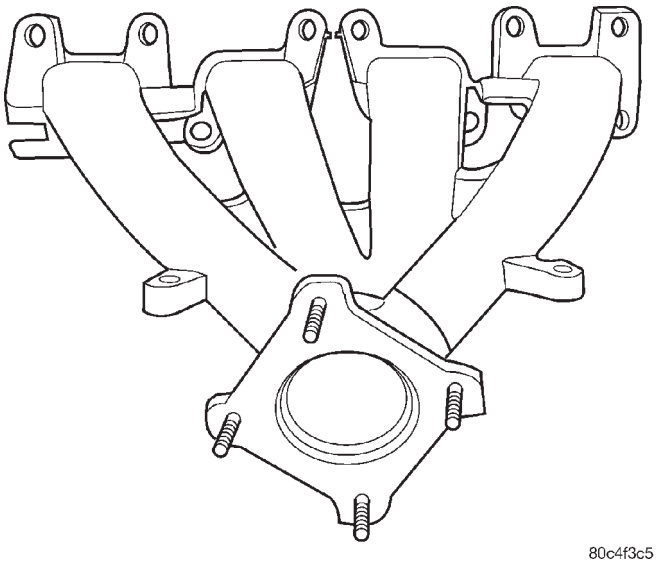

Fig. 7 Exhaust Manifold

ENGINE LUBRICATION SYSTEM

DESCRIPTION

The lubrication system is a full-flow filtration, pressure feed type. The oil pump is mounted in the front engine cover and driven by the crankshaft.

OPERATION

Engine oil drawn up through the pickup tube and is pressurized by the oil pump and routed through the full-flow filter to the main oil gallery running the length of the cylinder block. A diagonal hole in each bulkhead feeds oil to each main bearing. Drilled passages within the crankshaft route oil from main bearing journals to connecting rod journals. Balance shaft lubrication is provided through an oil passage from the number one main bearing cap through the balance shaft carrier support leg. This passage directly supplies oil to the front bearings and internal machined passages in the shafts that routes oil from front to the rear shaft bearing journals. A vertical hole at the number five bulkhead routes pressurized oil through a restrictor (integral to the cylinder head gasket) up past a cylinder head bolt to an oil gallery running the length of the cylinder head. The camshaft journals are partially slotted to allow a predetermined amount of pressurized oil to pass into the bearing cap cavities. Lubrication of the camshaft lobes are provided by small holes in the camshaft bearing caps that are directed towards each lobe. Oil returning to the pan from pressurized components supplies lubrication to the valve stems. Cylinder bores and wrist pins are splash lubricated from directed slots on the connecting rod thrust collars.

ENGINE MOUNT

DESCRIPTION

The engine mounting system (Fig. 8) (Fig. 9) consist of a four-point system utilizing two load-carrying mounts and two torque struts. The load-carrying mounts are located on each frame rail. The right mount is a hydro-elastic mount and left mount is a conventional elastomeric isolator. The two torque controlling struts are attached at the front of the engine, straddling the right side load-carrying mount. The upper strut connects to the suspension strut tower and the lower to the suspension crossmember.

OPERATION

The four-point engine mounting system minimizes the transmission of structure-borne engine noise to the passenger compartment. The load-carrying right and left mounts dampen and isolate vertical motion and vibration. The two struts absorbs torque reaction forces and torsional vibrations.

DIAGNOSIS AND TESTING

ENGINE DIAGNOSIS—INTRODUCTION

Engine diagnosis is helpful in determining the causes of malfunctions not detected and remedied by routine maintenance.

These malfunctions may be classified as either mechanical (e.g., a strange noise), or performance (e.g., engine idles rough and stalls).

Refer to the Service Diagnosis—Mechanical Chart and the Service Diagnosis—Performance Chart, for possible causes and corrections of malfunctions. Refer to FUEL SYSTEM for the fuel system diagnosis.

DIAGNOSIS AND TESTING (Continued)

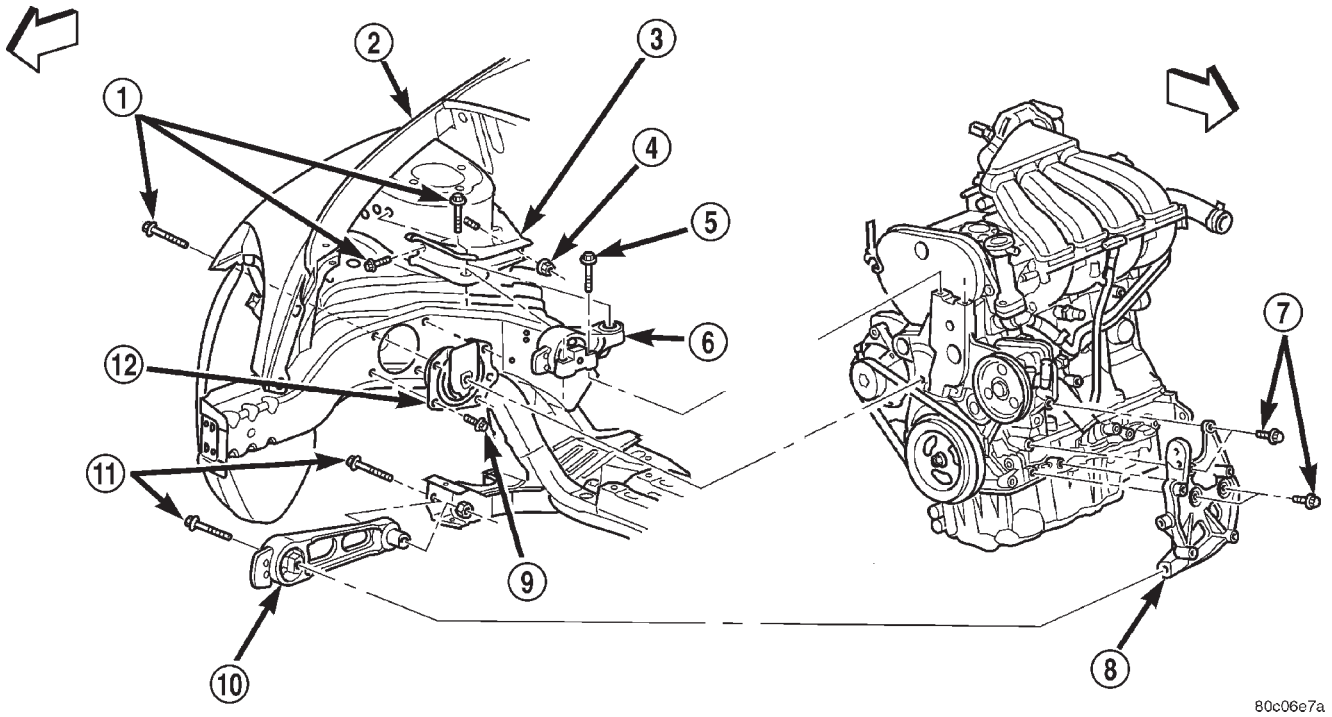

Fig. 8 Engine Mounting—Right Side

1 – BOLT
2 – RIGHT FENDER
3 – UPPER TORQUE STRUT BRACKET
4 – NUT
5 – BOLT
6 – UPPER TORQUE STRUT
7 – BOLT
8 – LOWER TORQUE STRUT BRACKET
9 – BOLT
10 – LOWER TORQUE STRUT
11 – BOLT
12 – RIGHT ENGINE MOUNT

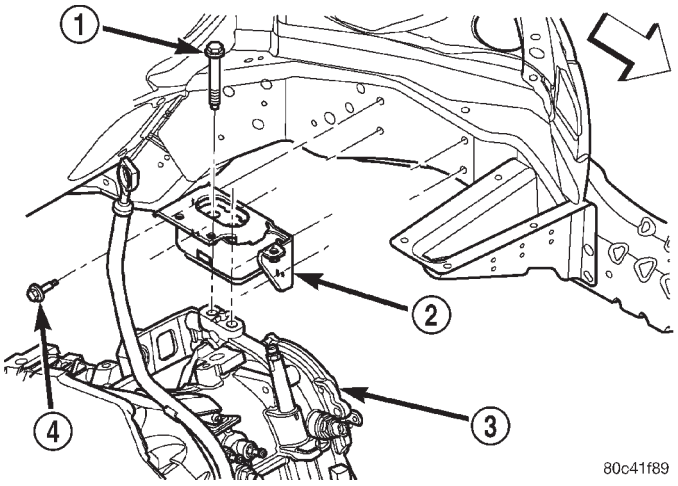

Fig. 9 Engine Mounting—Left Side

1 – BOLT
2 – LEFT MOUNT
3 – TRANSAXLE
4 – BOLT

Additional tests and diagnostic procedures may be necessary for specific engine malfunctions that cannot be isolated with the Service Diagnosis charts. Information concerning additional tests and diagnosis is provided within the following:

- Cylinder Compression Pressure Test
- Cylinder Combustion Pressure Leakage Test
- Cylinder Head Gasket Failure Diagnosis
- Intake Manifold Leakage Diagnosis
- Lash Adjuster (Tappet) Noise Diagnosis
- Engine Oil Leak Inspection

DIAGNOSIS AND TESTING (Continued)

ENGINE DIAGNOSIS—PERFORMANCE

CONDITION	POSSIBLE CAUSE	CORRECTION
ENGINE WILL NOT START	1. Weak battery.	1. Test battery. Charge or replace as necessary. Refer to BATTERY.
	2. Corroded or loose battery connections.	2. Clean and tighten battery connections. Apply a coat of light mineral grease to terminals.
	3. Faulty starter.	3. Test starting system. Refer to STARTING.
	4. Faulty coil(s), or PCM.	4. Test and replace as needed. Refer to IGNITION SYSTEM.
	5. Incorrect spark plug gap.	5. Set gap. Refer to IGNITION SYSTEM.
	6. Contamination in fuel system.	6. Clean system and replace fuel filter.
	7. Faulty fuel pump.	7. Test fuel pump and replace as needed. Refer to FUEL SYSTEM.
	8. Incorrect engine timing.	8. Check for a skipped timing belt/chain.
ENGINE STALLS OR IDLES ROUGH	1. Idle speed too low.	1. Test minimum air flow. Refer to FUEL SYSTEM.
	2. Incorrect fuel mixture.	2. Refer to FUEL SYSTEM.
	3. Intake manifold leakage.	3. Inspect intake manifold, manifold gasket, and vacuum hoses.
	4. Faulty ignition coil(s) or spark plug cable(s).	4. Test and replace as necessary. Refer to IGNITION SYSTEM.
	5. Incorrect engine timing.	5. Check for a skipped timing belt/chain.
ENGINE LOSS OF POWER	1. Dirty or incorrectly gapped plugs.	1. Clean plugs and set gap. Refer to IGNITION SYSTEM.
	2. Contamination in fuel system.	2. Clean system and replace fuel filter.
	3. Faulty fuel pump.	3. Test and replace as necessary. Refer to FUEL SYSTEM.
	4. Incorrect valve timing.	4. Correct valve timing.
	5. Leaking cylinder head gasket.	5. Replace cylinder head gasket.
	6. Low compression.	6. Test compression of each cylinder.
	7. Burned, warped, or pitted valves.	7. Replace valves.
	8. Plugged or restricted exhaust system.	8. Check exhaust back pressure. Replace restricted component, as necessary.
	9. Faulty ignition coil(s) or spark plug cable(s).	9. Test and replace as necessary. Refer to IGNITION SYSTEM.

DIAGNOSIS AND TESTING (Continued)

CONDITION	POSSIBLE CAUSE	CORRECTION
ENGINE MISSES ON ACCELERATION	1. Dirty or incorrectly gapped spark plugs.	1. Clean spark plugs and set gap. Refer to IGNITION SYSTEM.
	2. Contamination in Fuel System.	2. Clean fuel system and replace fuel filter.
	3. Burned, warped, or pitted valves.	3. Replace valves.
	4. Faulty ignition coil(s) or spark plug cable(s).	4. Test and replace as necessary. Refer to IGNITION SYSTEM.
ENGINE MISSES AT HIGH SPEED	1. Dirty or incorrect spark plug gap.	1. Clean spark plugs and set gap. Refer to IGNITION SYSTEM.
	2. Faulty ignition coil(s) or spark plug cable(s).	2. Test and replace as necessary. Refer to IGNITION SYSTEM.
	3. Dirty fuel injector(s).	Test and replace as necessary. Refer to FUEL SYSTEM.
	4. Contamination in fuel system.	4. Clean system and replace fuel filter.

ENGINE DIAGNOSIS—MECHANICAL

CONDITION	POSSIBLE CAUSES	CORRECTION
NOISY VALVES	1. High or low oil level in crankcase.	1. Check and correct engine oil level.
	2. Thin or diluted oil.	2. Change oil to correct viscosity.
	3. Low oil pressure.	3. Check and correct engine oil level.
	4. Dirt in tappets/lash adjusters.	4. Replace rocker arm/hydraulic lash adjuster assembly.
	5. Worn rocker arms.	5. Inspect oil supply to rocker arms.
	6. Worn tappets/lash adjusters.	6. Install new rocker arm/hydraulic lash adjuster assembly.
	7. Worn valve guides.	7. Ream guides and install new valves with oversize stems.
	8. Excessive runout of valve seats on valve faces.	8. Grind valve seats and valves.
CONNECTING ROD NOISE	1. Insufficient oil supply.	1. Check engine oil level.
	2. Low oil pressure.	2. Check engine oil level. Inspect oil pump relief valve and spring.
	3. Thin or diluted oil.	3. Change oil to correct viscosity.
	4. Excessive bearing clearance.	4. Measure bearings for correct clearance. Repair as necessary.
	5. Connecting rod journal out-of-round.	5. Replace crankshaft or grind surface.
	6. Misaligned connecting rods.	6. Replace bent connecting rods.

DIAGNOSIS AND TESTING (Continued)

CONDITION	POSSIBLE CAUSES	CORRECTION
MAIN BEARING NOISE	1. Insufficient oil supply.	1. Check engine oil level.
	2. Low oil pressure.	2. Check engine oil level. Inspect oil pump relief valve and spring.
	3. Thin or diluted oil.	3. Change oil to correct viscosity.
	4. Excessive bearing clearance.	4. Measure bearings for correct clearance. Repair as necessary.
	5. Excessive end play.	5. Check thrust bearing for wear on flanges.
	6. Crankshaft journal out-of-round or worn.	6. Replace crankshaft or grind journals.
	7. Loose flywheel or torque converter.	7. Tighten to correct torque.
OIL PRESSURE DROP	1. Low oil level.	1. Check engine oil level.
	2. Faulty oil pressure sending unit.	2. Install new sending unit.
	3. Low oil pressure.	3. Check sending unit and main bearing oil clearance.
	4. Clogged oil filter.	4. Install new oil filter.
	5. Worn parts in oil pump.	5. Replace worn parts or pump.
	6. Thin or diluted oil.	6. Change oil to correct viscosity.
	7. Oil pump relief valve stuck.	7. Remove valve and inspect, clean, or replace.
	8. Oil pump suction tube loose.	8. Remove oil pan and install new tube or clean, if necessary.
	9. Oil pump cover warped or cracked.	9. Install new oil pump.
	10. Excessive bearing clearance.	10. Measure bearings for correct clearance.
OIL LEAKS	1. Misaligned or deteriorated gaskets.	1. Replace gasket(s).
	2. Loose fastener, broken or porous metal part.	2. Tighten, repair or replace the part.
	3. PCV system malfunction.	3. Check system and repair as necessary. Refer to EMISSION CONTROL SYSTEMS.
	4. Misaligned or deteriorated cup or threaded plug.	4. Replace as necessary.

DIAGNOSIS AND TESTING (Continued)

CONDITION	POSSIBLE CAUSES	CORRECTION
OIL CONSUMPTION OR SPARK PLUGS FOULED	1. PCV system malfunction.	1. Check system and repair as necessary. Refer to EMISSION CONTROL SYSTEMS.
	2. Worn, scuffed or broken rings.	2. Hone cylinder bores. Install new rings.
	3. Carbon in oil ring slots.	3. Install new rings.
	4. Rings fitted too tightly in grooves.	4. Remove rings and check grooves. If groove is not proper width, replace piston.
	5. Worn valve guide(s).	5. Ream guide(s) and replace valve(s) with oversize valve(s) and seal(s).
	6. Valve stem seal(s) worn or damaged.	6. Replace seal(s).

HYDROSTATIC LOCKED ENGINE

When an engine is suspected to be hydrostatically locked, regardless of what caused the problem, the following steps should be used.

CAUTION: DO NOT use starter motor to rotate the engine, severe damage may occur.

(1) Inspect air cleaner, induction system and intake manifold to insure system is dry and clear of foreign material.
(2) Remove negative battery cable.
(3) Place a shop towel around the spark plugs when removing them from the engine. This will catch any fluid that may possibly be in the cylinder under pressure.
(4) With all spark plugs removed, rotate engine crankshaft using a breaker bar and socket.
(5) Identify the fluid in the cylinder(s) (i.e., coolant, fuel, oil or other).
(6) Make sure all fluid has been removed from the cylinders. Inspect engine for damage (i.e., connecting rods, pistons, valves, etc.)
(7) Repair engine or components as necessary to prevent this problem from re-occurring.

CAUTION: Squirt approximately one teaspoon of oil into the cylinders, rotate engine to lubricate the cylinder walls to prevent damage on restart.

(8) Install new spark plugs.
(9) Drain engine oil and remove oil filter.
(10) Fill engine with specified amount of approved oil and install new oil filter.
(11) Connect negative battery cable.
(12) Start engine and check for any leaks.

INTAKE MANIFOLD LEAKAGE DIAGNOSIS

An intake manifold air leak is characterized by lower than normal manifold vacuum. Also, one or more cylinders may not be functioning.

WARNING: USE EXTREME CAUTION WHEN THE ENGINE IS OPERATING. DO NOT STAND IN A DIRECT LINE WITH THE FAN. DO NOT PUT YOUR HANDS NEAR THE PULLEYS, BELTS OR THE FAN. DO NOT WEAR LOOSE CLOTHING.

(1) Start the engine.
(2) Spray a small stream of water (Spray Bottle) at the suspected leak area.
(3) If engine RPM'S change, the area of the suspected leak has been found.
(4) Repair or replace component as necessary.

CYLINDER COMPRESSION PRESSURE TEST

The results of a cylinder compression pressure test can be utilized to diagnose several engine malfunctions.

Ensure the battery is completely charged and the engine starter motor is in good operating condition. Otherwise the indicated compression pressures may not be valid for diagnosis purposes.

(1) Check engine oil level and add oil if necessary.
(2) Drive the vehicle until engine reaches normal operating temperature. Select a route free from traffic and other forms of congestion, observe all traffic laws, and accelerate through the gears several times briskly.
(3) Remove all spark plugs from engine. As spark plugs are being removed, check electrodes for abnormal firing indicators fouled, hot, oily, etc. Record cylinder number of spark plug for future reference.

DIAGNOSIS AND TESTING (Continued)

(4) Disconnect coil wire from distributor and secure to good ground to prevent a spark from starting a fire (Conventional Ignition System). For Direct Ignition System DIS disconnect the coil connector.

(5) Be sure throttle blade is fully open during the compression check.

(6) Insert compression gage adaptor Special Tool 8116 or the equivalent, into the #1 spark plug hole in cylinder head. Connect the 0–500 psi (Blue) pressure transducer with cable adaptors to the DRBIII®.

(7) Crank engine until maximum pressure is reached on gage. Record this pressure as #1 cylinder pressure.

(8) Repeat the previous step for all remaining cylinders.

(9) Compression should not be less than 689 kPa (100 psi) and not vary more than 25 percent from cylinder to cylinder.

(10) If one or more cylinders have abnormally low compression pressures, repeat the compression test.

(11) If the same cylinder or cylinders repeat an abnormally low reading on the second compression test, it could indicate the existence of a problem in the cylinder in question. **The recommended compression pressures are to be used only as a guide to diagnosing engine problems. An engine should not be disassembled to determine the cause of low compression unless some malfunction is present.**

CYLINDER COMBUSTION PRESSURE LEAKAGE TEST

The combustion pressure leakage test provides an accurate means for determining engine condition.

Combustion pressure leakage testing will detect:

- Exhaust and intake valve leaks (improper seating).
- Leaks between adjacent cylinders or into water jacket.
- Any causes for combustion/compression pressure loss.

WARNING: DO NOT REMOVE THE RADIATOR CAP WITH THE SYSTEM HOT AND UNDER PRESSURE BECAUSE SERIOUS BURNS FROM COOLANT CAN OCCUR.

Check the coolant level and fill as required. DO NOT install the radiator cap.

Start and operate the engine until it attains normal operating temperature, then turn the engine OFF.

Clean spark plug recesses with compressed air.

Remove the spark plugs.

Remove the oil filler cap.

Remove the air cleaner.

Calibrate the tester according to the manufacturer's instructions. The shop air source for testing should maintain 483 kPa (70 psi) minimum, 1,379 kPa (200 psi) maximum, with 552 kPa (80 psi) recommended.

Perform the test procedures on each cylinder according to the tester manufacturer's instructions. While testing, listen for pressurized air escaping through the throttle body, tailpipe and oil filler cap opening. Check for bubbles in the radiator coolant.

All gauge pressure indications should be equal, with no more than 25% leakage per cylinder.

FOR EXAMPLE: At 552 kPa (80 psi) input pressure, a minimum of 414 kPa (60 psi) should be maintained in the cylinder.

CYLINDER HEAD GASKET FAILURE DIAGNOSIS

A leaking engine cylinder head gasket usually results in loss of power, loss of coolant, and engine misfiring.

An engine cylinder head gasket leak can be located between adjacent cylinders or between a cylinder and the adjacent water jacket.

- An engine cylinder head gasket leaking between adjacent cylinders is indicated by a loss of power and/or engine misfire.
- An engine cylinder head gasket leaking between a cylinder and an adjacent water jacket is indicated by coolant foaming or overheating and loss of coolant.

CYLINDER-TO-CYLINDER LEAKAGE TEST

To determine if an engine cylinder head gasket is leaking between adjacent cylinders, follow the procedures in Cylinder Compression Pressure Test. An engine cylinder head gasket leaking between adjacent cylinders will result in approximately a 50–70% reduction in compression pressure.

CYLINDER-TO-WATER JACKET LEAKAGE TEST

WARNING: USE EXTREME CAUTION WHEN THE ENGINE IS OPERATING. DO NOT STAND IN A DIRECT LINE WITH THE FAN. DO NOT PUT YOUR HANDS NEAR THE PULLEYS, BELTS, OR THE FAN. DO NOT WEAR LOOSE CLOTHING.

Remove the radiator cap.

Start the engine and allow it to warm up until the engine thermostat opens.

If a large combustion/compression pressure leak exists, bubbles will be visible in the coolant.

If bubbles are not visible, perform either of the following procedures:

PRESSURE TEST

- Install cooling system tester Special Tool 7700 or equivalent, and pressurize the coolant system.

DIAGNOSIS AND TESTING (Continued)

• If a cylinder is leaking combustion pressure into the water jacket, the tester pointer will pulsate with every combustion stroke of the cylinder.

CHEMICAL TEST

• This procedure involves using Bloc-Chek Test Kit, Special Tool C-3685-A or the equivalent. Perform test procedure following the instructions included with the test kit.

LASH ADJUSTER (TAPPET) NOISE DIAGNOSIS

A tappet-like noise may be produced from several items. Check the following items.

(1) Engine oil level too high or too low. This may cause aerated oil to enter the adjusters and cause them to be spongy.

(2) Insufficient running time after rebuilding cylinder head. Low speed running up to 1 hour may be required.

(3) During this time, turn engine off and let set for a few minutes before restarting. Repeat this several times after engine has reached normal operating temperature.

(4) Low oil pressure.

(5) The oil restrictor (integral to the cylinder head gasket) in the vertical oil passage to the cylinder head is plugged with debris.

(6) Air ingested into oil due to broken or cracked oil pump pick up.

(7) Worn valve guides.

(8) Rocker arm ears contacting valve spring retainer.

(9) Rocker arm loose, adjuster stuck or at maximum extension and still leaves lash in the system.

(10) Faulty lash adjuster.

a. Check lash adjusters for sponginess while installed in cylinder head. Depress part of rocker arm over adjuster. Normal adjusters should feel very firm. Spongy adjusters can be bottomed out easily.

b. Remove suspected lash adjusters, and replace as necessary.

ENGINE OIL LEAK INSPECTION

Begin with a thorough visual inspection of the engine, particularly at the area of the suspected leak. If an oil leak source is not readily identifiable, the following steps should be followed:

(1) Do not clean or degrease the engine at this time because some solvents may cause rubber to swell, temporarily stopping the leak.

(2) Add an oil soluble dye (use as recommended by manufacturer). Start the engine and let idle for approximately 15 minutes. Check the oil dipstick to make sure the dye is thoroughly mixed as indicated with a bright yellow color under a black light.

(3) Using a black light, inspect the entire engine for fluorescent dye, particularly at the suspected area of oil leak. If the oil leak is found and identified, repair per service manual instructions.

(4) If dye is not observed, drive the vehicle at various speeds for approximately 24 km (15 miles), and repeat inspection.

(5) **If the oil leak source is not positively identified at this time**, proceed with the air leak detection test method as follows:

• Disconnect the fresh air hose (make-up air) at the cylinder head cover and plug or cap the nipple on the cover.

• Remove the PCV valve hose from the cylinder head cover. Cap or plug the PCV valve nipple on the cover.

• Attach an air hose with pressure gauge and regulator to the dipstick tube.

CAUTION: Do not subject the engine assembly to more than 20.6 kpa (3 PSI) of test pressure.

• Gradually apply air pressure from 1 psi to 2.5 psi maximum while applying soapy water at the suspected source. Adjust the regulator to the suitable test pressure that provides the best bubbles which will pinpoint the leak source. If the oil leak is detected and identified, repair per service manual procedures.

• If the leakage occurs at the crankshaft rear oil seal area, refer to the section, Inspection for Rear Seal Area Leak.

(6) If no leaks are detected, turn off the air supply. Remove the air hose, all plugs, and caps. Install the PCV valve and fresh air hose (make-up air). Proceed to next step.

(7) Clean the oil off the suspect oil leak area using a suitable solvent. Drive the vehicle at various speeds approximately 24 km (15 miles). Inspect the engine for signs of an oil leak by using a black light.

NOTE: If oil leakage is observed at the dipstick tube to block location; remove the tube, clean and reseal using Mopar® Stud & Bearing Mount (press fit tube applications only), and for O-ring style tubes, remove tube and replace the O-ring seal.

INSPECTION FOR REAR SEAL AREA LEAKS

Since it is sometimes difficult to determine the source of an oil leak in the rear seal area of the engine, a more involved inspection is necessary. The following steps should be followed to help pinpoint the source of the leak.

If the leakage occurs at the crankshaft rear oil seal area:

(1) Disconnect the battery.

DIAGNOSIS AND TESTING (Continued)

(2) Raise the vehicle.

(3) Remove torque converter or clutch housing cover and inspect rear of block for evidence of oil. Use a black light to check for the oil leak. If a leak is present in this area, remove transmission for further inspection.

(a) Circular spray pattern generally indicates seal leakage or crankshaft damage.

(b) Where leakage tends to run straight down, possible causes are a porous block, oil gallery cup plug, bedplate to cylinder block mating surfaces and seal bore. See proper repair procedures for these items.

(4) If no leaks are detected, pressurize the crankcase as previously described.

CAUTION: Do not exceed 20.6 kPa (3 psi).

(5) If the leak is not detected, very slowly turn the crankshaft and watch for leakage. If a leak is detected between the crankshaft and seal while slowly turning the crankshaft, it is possible the crankshaft seal surface is damaged. The seal area on the crankshaft could have minor nicks or scratches that can be polished out with emery cloth.

CAUTION: Use extreme caution when crankshaft polishing is necessary to remove minor nicks and scratches. The crankshaft seal flange is especially machined to complement the function of the rear oil seal.

(6) For bubbles that remain steady with shaft rotation, no further inspection can be done until disassembled.

(7) After the oil leak root cause and appropriate corrective action have been identified, refer to Crankshaft Oil Seal—Rear for proper replacement procedures.

ENGINE OIL PRESSURE

(1) Disconnect and remove oil pressure switch. Refer to precedures in this section.

(2) Install Special Tools C-3292 Gauge with 8406 Adaptor fitting.

(3) Start engine and record oil pressure. Refer to Engine Specifications – Oil Pressure for correct pressure.

SERVICE PROCEDURES

ENGINE OIL LEVEL CHECK

The best time to check engine oil level is after the vehicle has sat overnight, or if the engine has been running, allow the engine to be shut off for at least 5 minutes before checking oil level.

Checking the oil while the vehicle is on level ground will improve the accuracy of the oil level reading. Remove dipstick (Fig. 10), and observe oil level. Add oil only when the level is at or below the MIN mark (Fig. 11).

CAUTION: Do not operate engine if the oil level is above the MAX mark on the dipstick. Excessive oil volume can cause oil aeration which can lead to engine failure due to loss of oil pressure or increase in oil temperature.

ENGINE OIL AND FILTER CHANGE

CHANGING ENGINE OIL

Change engine oil at mileage and time intervals described in the Maintenance Schedule. Refer to LUBRICATION AND MAINTENANCE.

WARNING: NEW OR USED ENGINE OIL CAN BE IRRITATING TO THE SKIN. AVOID PROLONGED OR REPEATED SKIN CONTACT WITH ENGINE OIL. CONTAMINANTS IN USED ENGINE OIL, CAUSED BY INTERNAL COMBUSTION, CAN BE HAZARDOUS TO YOUR HEALTH. THOROUGHLY WASH EXPOSED SKIN WITH SOAP AND WATER. DO NOT WASH SKIN WITH GASOLINE, DIESEL FUEL, THINNER, OR SOLVENTS, HEALTH PROBLEMS CAN RESULT. DO NOT POLLUTE, DISPOSE OF USED ENGINE OIL PROPERLY. CONTACT YOUR DEALER OR GOVERNMENT AGENCY FOR LOCATION OF COLLECTION CENTER IN YOUR AREA.

(1) Run engine until achieving normal operating temperature.

(2) Position the vehicle on a level surface and turn engine off.

(3) Hoist and support vehicle on safety stands. Refer to Hoisting and Jacking Recommendations.

(4) Remove oil fill cap.

(5) Place a suitable drain pan under crankcase drain.

(6) Remove drain plug (Fig. 12) from crankcase and allow oil to drain into pan. Inspect drain plug threads for stretching or other damage. Replace drain plug and gasket if damaged.

(7) Remove oil filter (Fig. 12). Refer to oil filter Removal procedure in this section.

(8) Install drain plug in crankcase.

(9) Install new oil filter. Refer to oil filter installation procedure in this section.

(10) Lower vehicle and fill crankcase with specified type and amount of engine oil.

(11) Install oil fill cap.

(12) Start engine and inspect for leaks.

(13) Stop engine and inspect oil level.

SERVICE PROCEDURES (Continued)

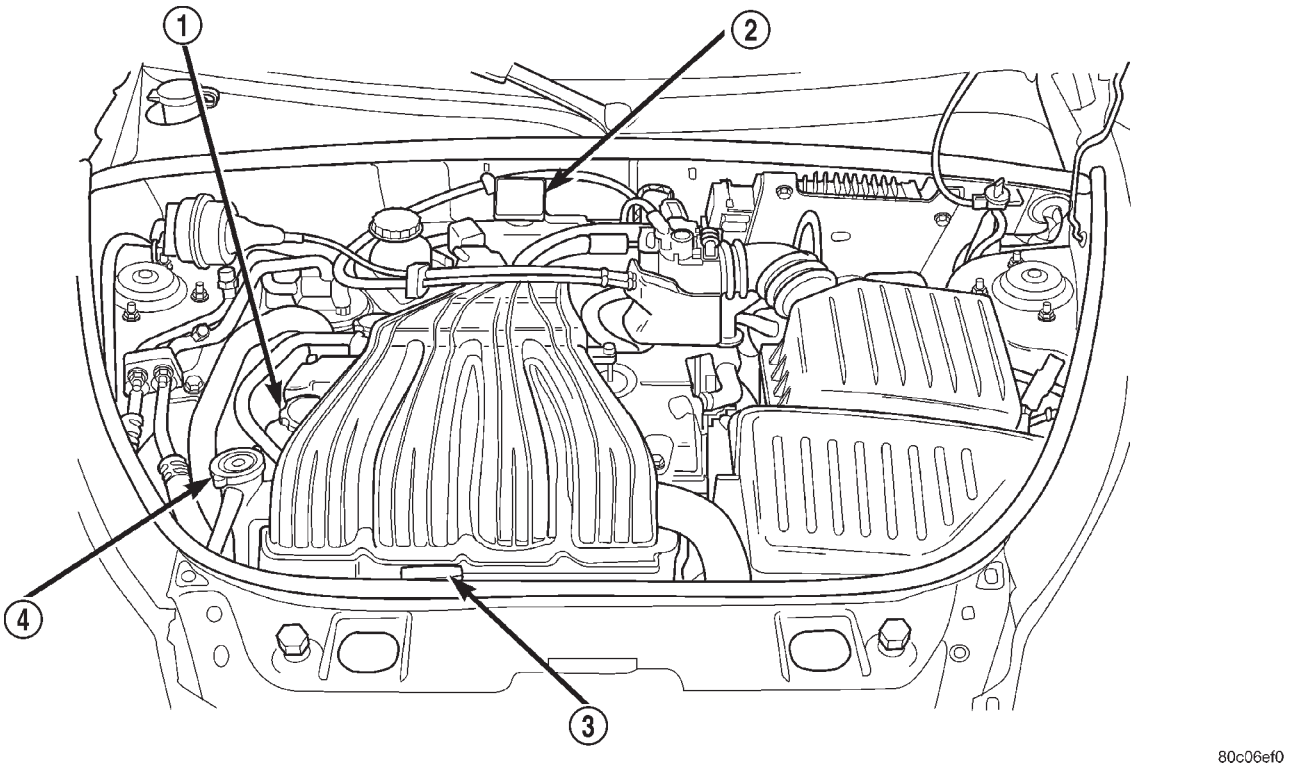

Fig. 10 Engine Oil Dipstick and Fill Locations

1 – ENGINE OIL FILL
2 – COOLANT RECOVERY BOTTLE
3 – ENGINE OIL DIPSTICK
4 – COOLANT PRESSURE CAP

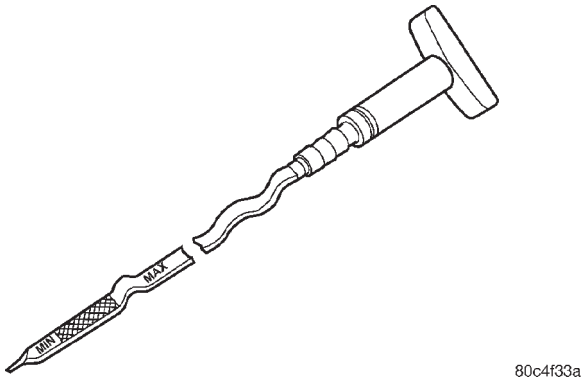

Fig. 11 Engine Oil Dipstick

OIL FILTER SPECIFICATION

All engines are equipped with a high quality full-flow, disposable type oil filter. Replace oil filter with a Mopar® or the equivalent.

USED ENGINE OIL DISPOSAL

Care should be exercised when disposing used engine oil after it has been drained from a vehicle engine. Refer to the WARNING listed above.

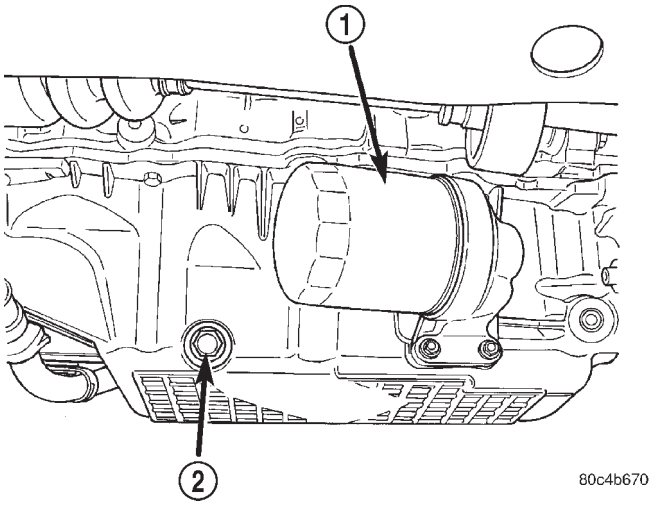

Fig. 12 Oil Filter and Drain Plug

1 – OIL FILTER
2 – DRAIN PLUG

FORM-IN-PLACE GASKETS & SEALERS

There are numerous places where form-in-place gaskets are used on the engine. Care must be taken when applying form-in-place gaskets to assure obtaining the desired results. **Do not use form-in-**

SERVICE PROCEDURES (Continued)

place gasket material unless specified. Bead size, continuity, and location are of great importance. Too thin a bead can result in leakage while too much can result in spill-over which can break off and obstruct fluid feed lines. A continuous bead of the proper width is essential to obtain a leak-free gasket.

There are numerous types of form-in-place gasket materials that are used in the engine area. Mopar® Engine RTV GEN II, Mopar® ATF-RTV, and Mopar® Gasket Maker gasket materials, each have different properties and can not be used in place of the other.

MOPAR® ENGINE RTV GEN II

Mopar® Engine RTV GEN II is used to seal components exposed to engine oil. This material is a specially designed black silicone rubber RTV that retains adhesion and sealing properties when exposed to engine oil. Moisture in the air causes the material to cure. This material is available in three ounce tubes and has a shelf life of one year. After one year this material will not properly cure. Always inspect the package for the expiration date before use.

MOPAR® ATF RTV

Mopar® ATF RTV is a specifically designed black silicone rubber RTV that retains adhesion and sealing properties to seal components exposed to automatic transmission fluid, engine coolants, and moisture. This material is available in three ounce tubes and has a shelf life of one year. After one year this material will not properly cure. Always inspect the package for the expiration date before use.

MOPAR® GASKET MAKER

Mopar® Gasket Maker is an anaerobic type gasket material. The material cures in the absence of air when squeezed between two metallic surfaces. It will not cure if left in the uncovered tube. The anaerobic material is for use between two machined surfaces. Do not use on flexible metal flanges.

MOPAR® BED PLATE SEALANT

Mopar® Bed Plate Sealant is a unique (green-in-color) anaerobic type gasket material that is specially made to seal the area between the bedplate and cylinder block without disturbing the bearing clearance or alignment of these components. The material cures slowly in the absence of air when torqued between two metallic surfaces, and will rapidly cure when heat is applied.

MOPAR® GASKET SEALANT

Mopar® Gasket Sealant is a slow drying, permanently soft sealer. This material is recommended for sealing threaded fittings and gaskets against leakage of oil and coolant. Can be used on threaded and machined parts under all temperatures. This material is used on engines with multi-layer steel (MLS) cylinder head gaskets. This material also will prevent corrosion. Mopar® Gasket Sealant is available in a 13 oz. aerosol can or 4oz./16 oz. can w/applicator.

FORM-IN-PLACE GASKET AND SEALER APPLICATION

Assembling parts using a form-in-place gasket requires care but it's easier then using precut gaskets.

Mopar® Gasket Maker material should be applied sparingly 1 mm (0.040 in.) diameter or less of sealant to one gasket surface. Be certain the material surrounds each mounting hole. Excess material can easily be wiped off. Components should be torqued in place within 15 minutes. The use of a locating dowel is recommended during assembly to prevent smearing material off the location.

Mopar® Engine RTV GEN II or ATF RTV gasket material should be applied in a continuous bead approximately 3 mm (0.120 in.) in diameter. All mounting holes must be circled. For corner sealing, a 3.17 or 6.35 mm (1/8 or 1/4 in.) drop is placed in the center of the gasket contact area. Uncured sealant may be removed with a shop towel. Components should be torqued in place while the sealant is still wet to the touch (within 10 minutes). The usage of a locating dowel is recommended during assembly to prevent smearing material off the location.

Mopar® Gasket Sealant in an aerosol can should be applied using a thin, even coat sprayed completely over both surfaces to be joined, and both sides of a gasket. Then proceed with assembly. Material in a can w/applicator can be brushed on evenly over the sealing surfaces. Material in an aerosol can should be used on engines with multi-layer steel gaskets.

ENGINE GASKET SURFACE PREPARATION

To ensure engine gasket sealing, proper surface preparation must be performed, especially with the use of aluminum engine components and multi-layer steel cylinder head gaskets.

Never use the following to clean gasket surfaces:

- Metal scraper
- Abrasive pad or paper to clean cylinder block and head
- High speed power tool with an abrasive pad or a wire brush (Fig. 13)

NOTE: Multi-Layer Steel (MLS) head gaskets require a scratch free sealing surface.

Only use the following for cleaning gasket surfaces:

- Solvent or a commercially available gasket remover
- Plastic or wood scraper (Fig. 13)
- Drill motor with 3M Roloc™ Bristle Disc (white or yellow) (Fig. 13)

SERVICE PROCEDURES (Continued)

CAUTION: Excessive pressure or high RPM (beyond the recommended speed), can damage the sealing surfaces. The mild (white, 120 grit) bristle disc is recommended. If necessary, the medium (yellow, 80 grit) bristle disc may be used on cast iron surfaces with care.

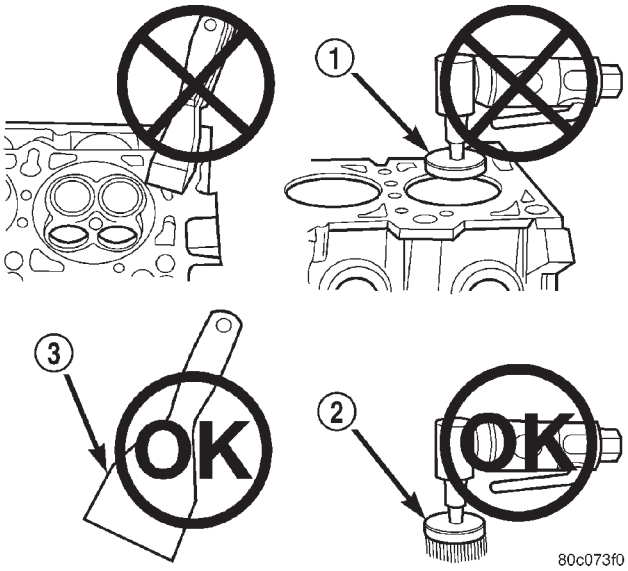

Fig. 13 Proper Tool Usage For Surface Preparation

1 – ABRASIVE PAD
2 – 3M ROLOC™ BRISTLE DISC
3 – PLASTIC/WOOD SCRAPER

REPAIR OF DAMAGED OR WORN THREADS

Damaged or worn threads (including aluminum head spark plug threads) can be repaired. Essentially, this repair consists of drilling out worn or damaged threads, tapping the hole with a special Heli-Coil Tap, (or equivalent) and installing an insert into the tapped hole. This brings the hole back to its original thread size.

CAUTION: Be sure that the tapped holes maintain the original centerline.

Heli-Coil tools and inserts are readily available from automotive parts jobbers.

CYLINDER BORE—HONING

(1) Used carefully, the cylinder bore resizing hone, recommended tool C-823 or equivalent, equipped with 220 grit stones, is the best tool for this honing procedure. In addition to deglazing, it will reduce taper and out-of-round as well as removing light scuffing, scoring or scratches. Usually a few strokes will clean up a bore and maintain the required limits.

(2) Deglazing of the cylinder walls may be done using a cylinder surfacing hone, recommended tool C-3501 or equivalent, equipped with 280 grit stones, if the cylinder bore is straight and round. 20–60 strokes depending on the bore condition, will be sufficient to provide a satisfactory surface. Use a light honing oil. **Do not use engine or transmission oil, mineral spirits or kerosene.** Inspect cylinder walls after each 20 strokes.

(3) Honing should be done by moving the hone up and down fast enough to get a cross-hatch pattern. When hone marks **intersect** at 50-60 degrees, the cross hatch angle is most satisfactory for proper seating of rings (Fig. 14).

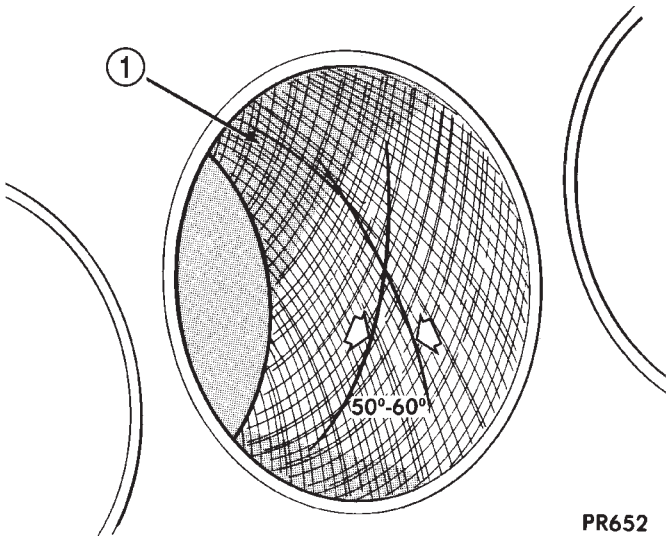

Fig. 14 Cylinder Bore Cross-Hatch Pattern

1 – CROSS-HATCH PATTERN

(4) A controlled hone motor speed between 200–300 RPM is necessary to obtain the proper cross-hatch angle. The number of up and down strokes per minute can be regulated to get the desired 50–60 degree angle. Faster up and down strokes increase the cross-hatch angle.

(5) After honing, it is necessary that the block be cleaned again to remove all traces of abrasive.

CAUTION: Ensure all abrasives are removed from engine parts after honing. It is recommended that a solution of soap and hot water be used with a brush and the parts then thoroughly dried. The bore can be considered clean when it can be wiped clean with a white cloth and cloth remains clean. Oil the bores after cleaning to prevent rusting.

CYLINDER BORE AND PISTON—SIZING

Piston and cylinder wall must be clean and dry. Piston diameter should be measured 90 degrees to piston pin about 14 mm (9/16 inch.) from the bottom of the skirt as shown in (Fig. 16). Cylinder bores

SERVICE PROCEDURES (Continued)

should be measured halfway down the cylinder bore and transverse to the engine crankshaft center line shown in (Fig. 15). Refer to for Engine Specifications. Correct piston to bore clearance must be established in order to assure quiet and economical operation.

DaimlerChrysler engines use pistons designed specifically for each engine model. Clearance and sizing locations vary with respect to engine model.

NOTE: Pistons and cylinder bores should be measured at normal room temperature, 70°F (21°C).

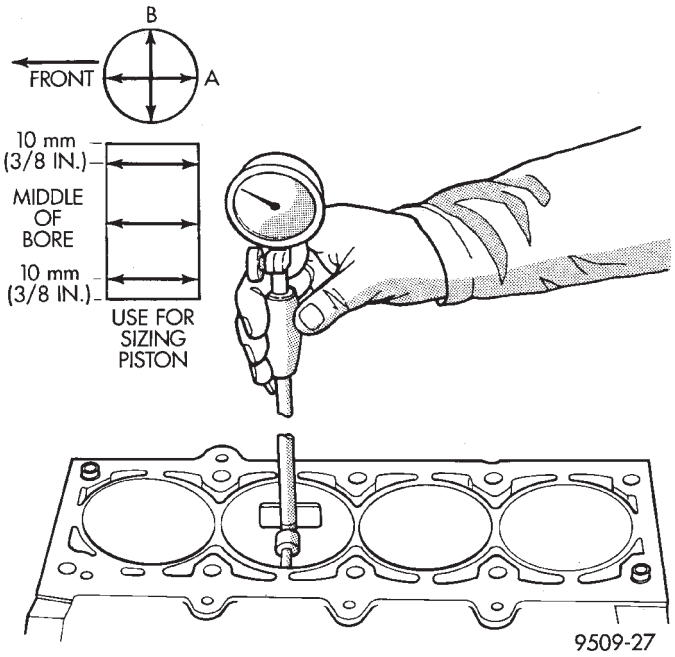

Fig. 15 Checking Cylinder Bore Size

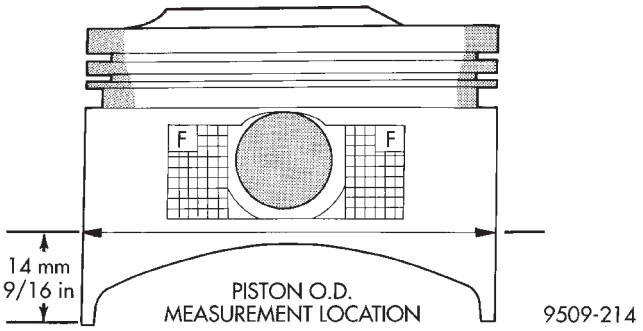

Fig. 16 Piston Measurement

PISTON RING—FITTING

(1) Wipe cylinder bore clean. Insert ring and push down with piston to ensure it is square in bore. The ring gap measurement must be made with the ring positioning at least 12 mm (0.50 inch) from bottom of cylinder bore. Check gap with feeler gauge (Fig. 17). Refer to Engine Specifications.

(2) Check piston ring to groove side clearance (Fig. 18). Refer to Engine Specifications.

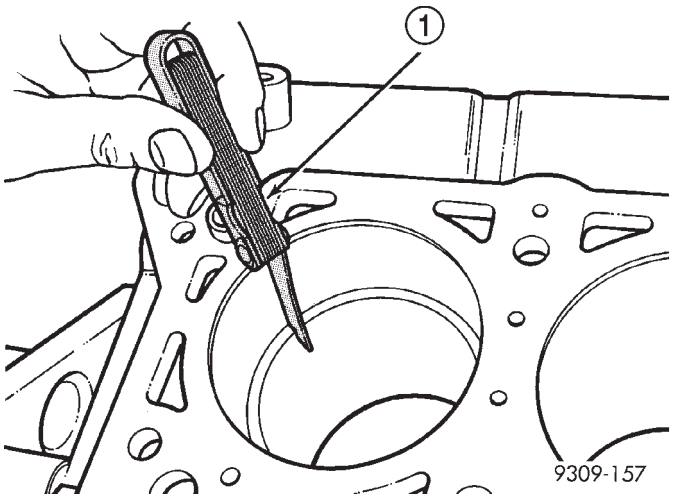

Fig. 17 Piston Ring Gap

1 – FEELER GAUGE

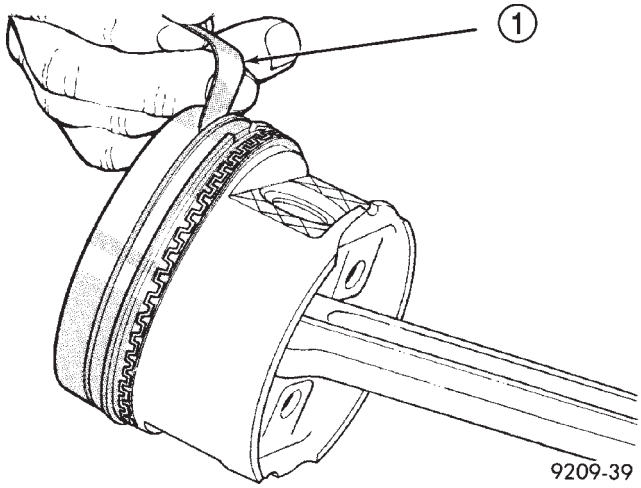

Fig. 18 Piston Ring Side Clearance

1 – FEELER GAUGE

PISTON RINGS—INSTALLATION

(1) Install rings with manufacturers I.D. mark facing up, to the top of the piston (Fig. 19).

CAUTION: Install piston rings in the following order:

a. Oil ring expander.
b. Upper oil ring side rail.
c. Lower oil ring side rail.
d. No. 2 Intermediate piston ring.
e. No. 1 Upper piston ring.

(2) Install the side rail by placing one end between the piston ring groove and the expander. Hold end firmly and press down the portion to be installed until side rail is in position. **Do not use a piston ring expander** (Fig. 20).

SERVICE PROCEDURES (Continued)

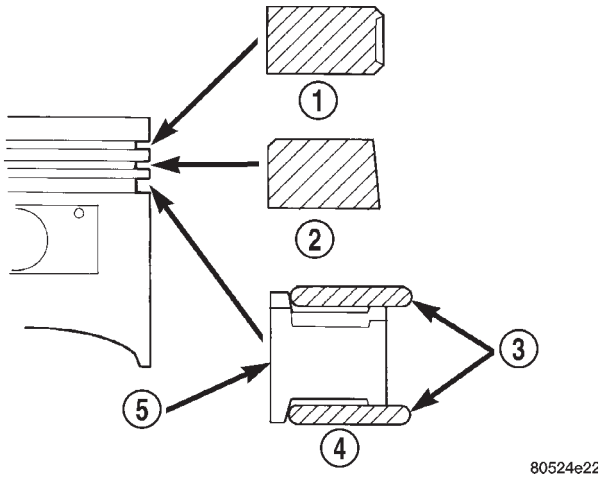

Fig. 19 Piston Ring Installation

1 – NO. 1 PISTON RING
2 – NO. 2 PISTON RING
3 – SIDE RAIL
4 – OIL RING
5 – SPACER EXPANDER

(3) Install upper side rail first and then the lower side rail.

(4) Install No. 2 piston ring and then No. 1 piston ring.

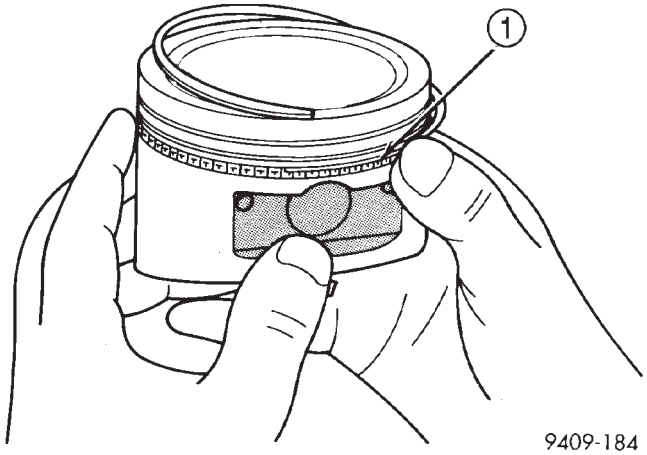

Fig. 20 Installing Side Rail

1 – SIDE RAIL END

(5) Position piston ring end gaps as shown in (Fig. 21).

(6) Position oil ring expander gap at least 45° from the side rail gaps but **not** on the piston pin center or on the thrust direction. Staggering ring gap is important for oil control.

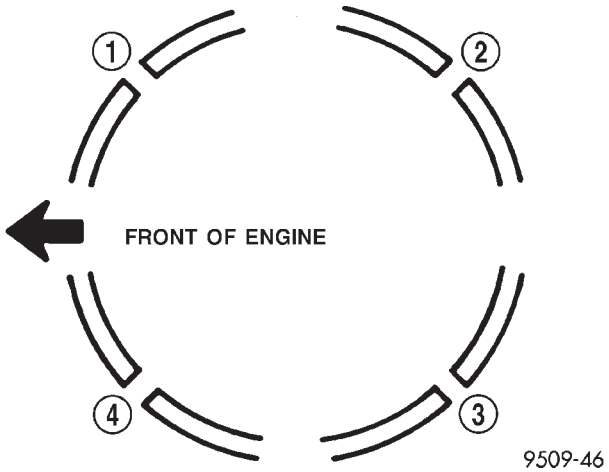

Fig. 21 Piston Ring End Gap Position

1 – GAP OF LOWER SIDE RAIL
2 – NO. 1 RING GAP
3 – GAP OF UPPER SIDE RAIL
4 – NO. 2 RING GAP AND SPACER EXPANDER GAP

CONNECTING ROD AND BEARING—FITTING

CONNECTING ROD BEARING CLEARANCE

Engine connecting rod bearing clearances can be determined by use of Plastigage or equivalent. Replacement bearings are available in the standard size and the following undersizes: 0.025 mm (0.001 in.) and 0.250 mm (0.010 in.). The following is the recommended procedure for the use of Plastigage:

(1) Rotate the crankshaft until the connecting rod to be checked is at the bottom of its stroke.

(2) Remove oil film from surface to be checked. Plastigage is soluble in oil.

(3) Place a piece of Plastigage across the entire width of the bearing shell in the bearing cap approximately 6.35 mm (1/4 in.) off center and away from the oil hole. In addition, suspect areas can be checked by placing Plastigage in that area.

(4) Assemble the rod cap with Plastigage in place. Tighten the rod cap to 27 N·m (20 ft. lbs.). Do not angle torque bolts the additional 1/4 turn, at this time.

NOTE: Do not rotate the crankshaft while assembling the cap or the Plastigage may be smeared, giving inaccurate results.

(5) Remove the bearing cap and compare the width of the flattened Plastigage (Fig. 22) with the scale provided on the package. Locate the band closest to the same width. This band indicates the amount of oil clearance. Differences in readings between the ends indicate the amount of taper present. Record all readings taken. Refer to Engine Specifications. **Plastigage generally is accompanied by two scales.**

SERVICE PROCEDURES (Continued)

One scale is in inches, the other is a metric scale. If the bearing clearance exceeds wear limit specification, replace the bearing.

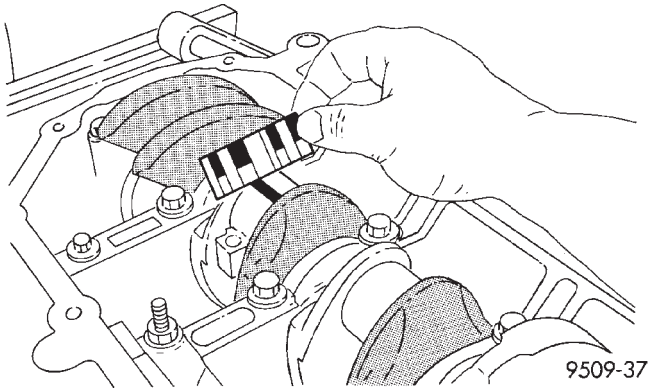

Fig. 22 Connecting Rod Bearing Clearance

CONNECTING ROD SIDE CLEARANCE

(1) Before installing the **NEW** bolts the threads should be oiled with clean engine oil.

NOTE: The connecting rod bolts should not be reused.

(2) Install each bolt finger tight than alternately torque each bolt to assemble the cap properly.

(3) Tighten the bolts to 27 N·m PLUS 1/4 turn (20 ft. lbs. PLUS 1/4 turn) **Do not use a torque wrench for last step.**

(4) Using a feeler gauge, check connecting rod side clearance (Fig. 23). Refer to Engine Specifications for connecting rod specifications.

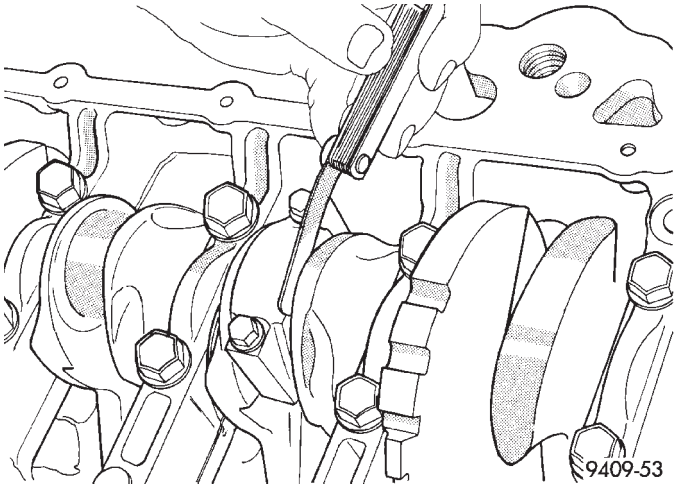

Fig. 23 Connecting Rod Side Clearance

MAIN BEARING—FITTING

For crankshaft specifications, refer to Engine Specifications.

CRANKSHAFT MAIN BEARINGS

The crankshaft is supported in five main bearings. All upper and lower bearing shells in the crankcase have oil grooves. Crankshaft end play is controlled by a flanged bearing on the number three main bearing journal (Fig. 24).

Upper and lower Number 3 bearing halves are flanged to carry the crankshaft thrust loads and are NOT interchangeable with any other bearing halves in the engine (Fig. 24). All bearing cap bolts removed during service procedures are to be cleaned and oiled before installation. Bearing shells are available in standard and the following undersized: 0.025 mm (0.001 in.) and 0.250 mm (0.010 in.). Never install an undersize bearing that will reduce clearance below specifications. Replace or machine the crankshaft as necessary to obtain proper bearing clearances.

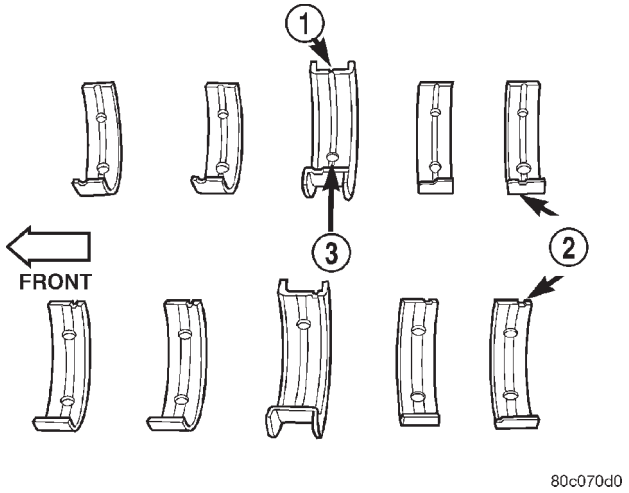

Fig. 24 Main Bearing Identification

1 – OIL GROOVE
2 – MAIN BEARINGS
3 – OIL HOLE

MAIN BEARING CLEARANCE

(1) With engine in the inverted position (crankshaft up) and mounted on a repair stand, remove bedplate and lower main bearings.

(2) Remove oil film from surface to be checked. Plastigage is soluble in oil.

(3) Clean bedplate to cylinder block sealing locations.

(4) Place a piece of Plastigage across the entire width of the bearing surface at each main bearing location, approximately 6.35 mm (1/4 in.) off center and away from the oil holes.

(5) Position bedplate (dry—no sealer) on cylinder block and torque the bolts in sequence to proper specifications. Refer to Main Bearing Installation procedure below.

SERVICE PROCEDURES (Continued)

(6) Remove the bedplate and compare the width of the flattened Plastigage (Fig. 25) with the metric scale provided on the package. Locate the band closest to the same width. This band shows the amount of clearance in thousandths of a millimeter. Differences in readings between the ends indicate the amount of taper present. Record all readings taken. Refer to Engine Specifications. **Plastigage generally is accompanied by two scales. One scale is in inches, the other is a metric scale.**

NOTE: Plastigage is available in a variety of clearance ranges. Use the most appropriate range for the specifications you are checking.

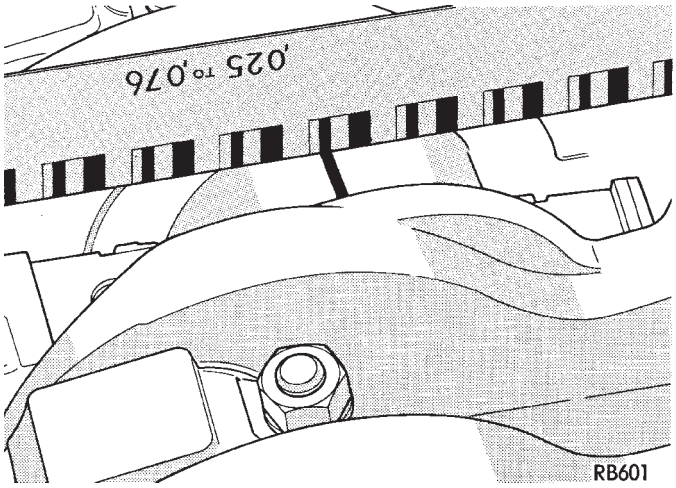

Fig. 25 Measuring Main Bearing Clearance

MAIN BEARING INSTALLATION

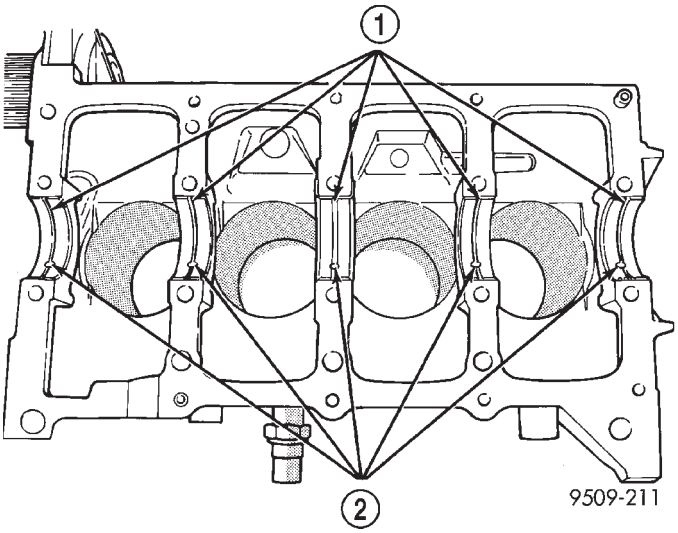

Fig. 26 Installing Main Bearing Upper Shell

1 – LUBRICATION GROOVES
2 – OIL HOLES

(1) Install the main bearing shells with the lubrication groove in the cylinder block (Fig. 26).

(2) Make certain oil holes in block line up with oil holes in bearings. Bearing tabs must seat in the block tab slots.

CAUTION: Do not get oil on the bedplate mating surface. It will may affect the sealer ability to seal the bedplate to cylinder block.

(3) Oil the bearings and journals and install crankshaft.

CAUTION: Use only the specified anaerobic sealer on the bedplate or damage may occur to the engine. Ensure that both cylinder block and bedplate surfaces are clean.

(4) Apply 1.5 to 2.0 mm (0.059 to 0.078 in.) bead of anaerobic sealer Mopar® Bed Plate Sealant to cylinder block as shown in (Fig. 27).

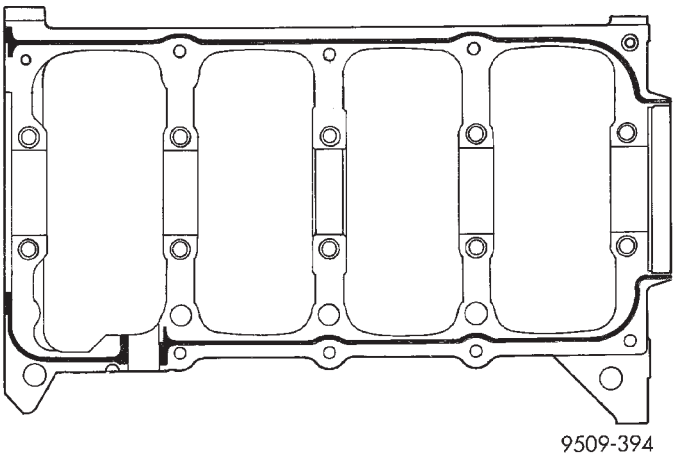

Fig. 27 Main Bearing Caps/Bedplate Sealing

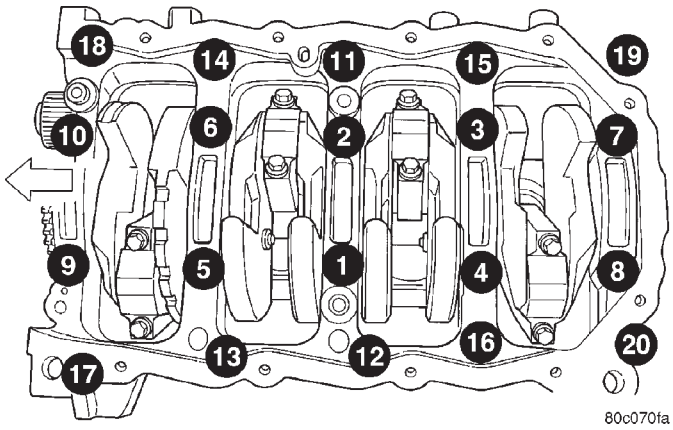

Fig. 28 Main Bearing Caps/Bedplate Torque Sequence

(5) Install lower main bearings into main bearing cap/bedplate. Make certain the bearing tabs are seated into the bedplate slots. Install the main bearing/bedplate into engine block.

SERVICE PROCEDURES (Continued)

(6) Before installing bolts, lubricate the threads with clean engine oil, wipe off any excess oil.

(7) Install main bearing bedplate to engine block bolts 11, 17 and 20 finger tight. Tighten these bolts down together until the bedplate contacts the cylinder block.

(8) To ensure correct thrust bearing alignment, perform the following steps:

- Step 1: Rotate crankshaft until number 4 piston is at TDC.
- Step 2: Move crankshaft rearward to limits of travel.
- Step 3: Then, move crankshaft forward to limits of travel.
- Step 4: Wedge an appropriate tool between the rear of the cylinder block **(NOT BED PLATE)** and the rear crankshaft counterweight. This will hold the crankshaft in it's furthest forward position.
- Step 5: Install and tighten bolts (1–10) in sequence shown in (Fig. 28) to 41 N·m (30 ft. lbs.).
- Step 6: Remove wedge tool used to hold crankshaft.

(9) Tighten bolts (1–10) again to 41 N·m (30 ft. lbs.) + 1/4 turn in sequence shown in (Fig. 28).

(10) Install main bearing bedplate to engine block bolts (11–20), and torque each bolt to 28 N·m (20 ft. lbs.) in sequence shown in (Fig. 28).

(11) After the main bearing bedplate is installed, check the crankshaft turning torque. The turning torque should not exceed 5.6 N·m (50 in. lbs.).

CRANKSHAFT END PLAY

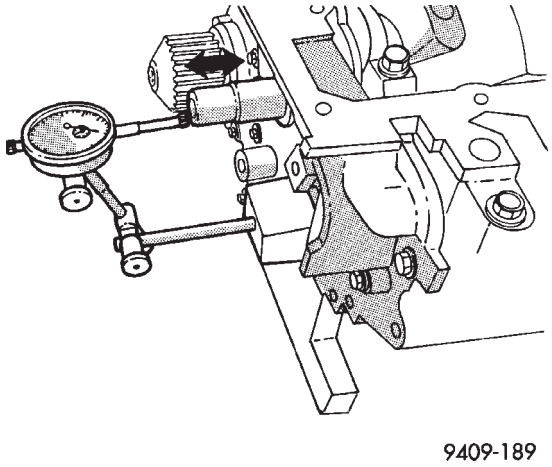

Fig. 29 Checking Crankshaft End Play—Typical

(1) Mount a dial indicator to front of engine, locating probe on nose of crankshaft (Fig. 29).

(2) Move crankshaft all the way to the rear of its travel.

(3) Zero the dial indicator.

(4) Move crankshaft all the way to the front and read the dial indicator. Refer to Engine Specifications for end play specification.

OPTIONAL CRANKSHAFT END PLAY CHECK

(1) Move crankshaft all the way to the rear of its travel using a lever inserted between a main bearing cap and a crankshaft cheek, using care not to damage any bearing surface. **DO NOT** loosen main bearing cap.

(2) Use a feeler gauge between number three thrust bearing and machined crankshaft surface to determine end play.

CAMSHAFT END PLAY

(1) Oil camshaft journals and install camshaft **WITHOUT** cam follower assemblies. Install rear cam caps and tighten screws to specified torque.

(2) Using a suitable tool, move camshaft as far rearward as it will go.

(3) Zero dial indicator (Fig. 30).

(4) Move camshaft as far forward as it will go.

(5) End play travel: 0.05 - 0.15 mm (0.002 - 0.010 in.).

(6) If end play is excessive, check cylinder head and camshaft for wear; replace as necessary.

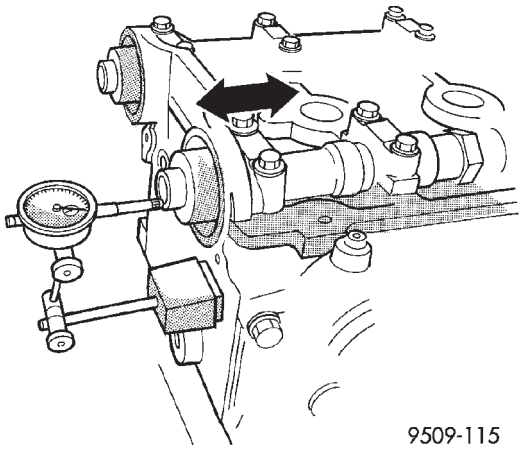

Fig. 30 Camshaft End Play

CAMSHAFT/CRANKSHAFT SYNCHRONIZATION

The camshaft and crankshaft synchronization procedure must be performed after a following component(s) replacement:

- Camshaft
- Camshaft Position Sensor
- Camshaft Sensor Target Magnet
- Crankshaft
- Cylinder Block
- Cylinder Head
- Water Pump
- Timing Belt and Timing Belt Tensioner
- Powertrain Control Module (PCM)

SERVICE PROCEDURES (Continued)

(1) Perform camshaft and crankshaft synchronization procedure as follows:

a. Connect the DRBIII® scan tool to the data link (diagnostic) connector. This connector is located in the passenger compartment; at the lower edge of instrument panel; near the steering column.

b. Turn the ignition switch on and access the “miscellaneous” screen.

c. Select “re-set values” option.

d. Perform cam/crank synchronization procedure following directions on DRBIII® screen.

REMOVAL AND INSTALLATION

TORQUE STRUTS

UPPER TORQUE STRUT

REMOVAL

(1) Remove bolts attaching strut to shock tower bracket and engine mount bracket (Fig. 31).

(2) Remove timing belt front upper cover (if A/C equipped). Refer to procedure in this section.

(3) Remove the upper torque strut.

INSTALLATION

(1) Position the upper torque strut into mounting location.

(2) Move torque strut aside (towards right fender) and install timing belt front upper cover (if A/C equipped). Refer to procedure in this section.

(3) Install the torque strut mounting bolts and perform the torque strut adjustment procedure.

LOWER TORQUE STRUT

REMOVAL

(1) Raise vehicle on hoist.

(2) Remove accessory belt splash shield (Fig. 32).

(3) Remove pencil strut.

(4) Remove bolts attaching lower strut to crossmember and strut bracket (Fig. 31).

(5) Remove lower torque strut.

INSTALLATION

(1) Position lower torque strut into mounting locations.

(2) Install mounting bolts and perform torque strut adjustment procedure.

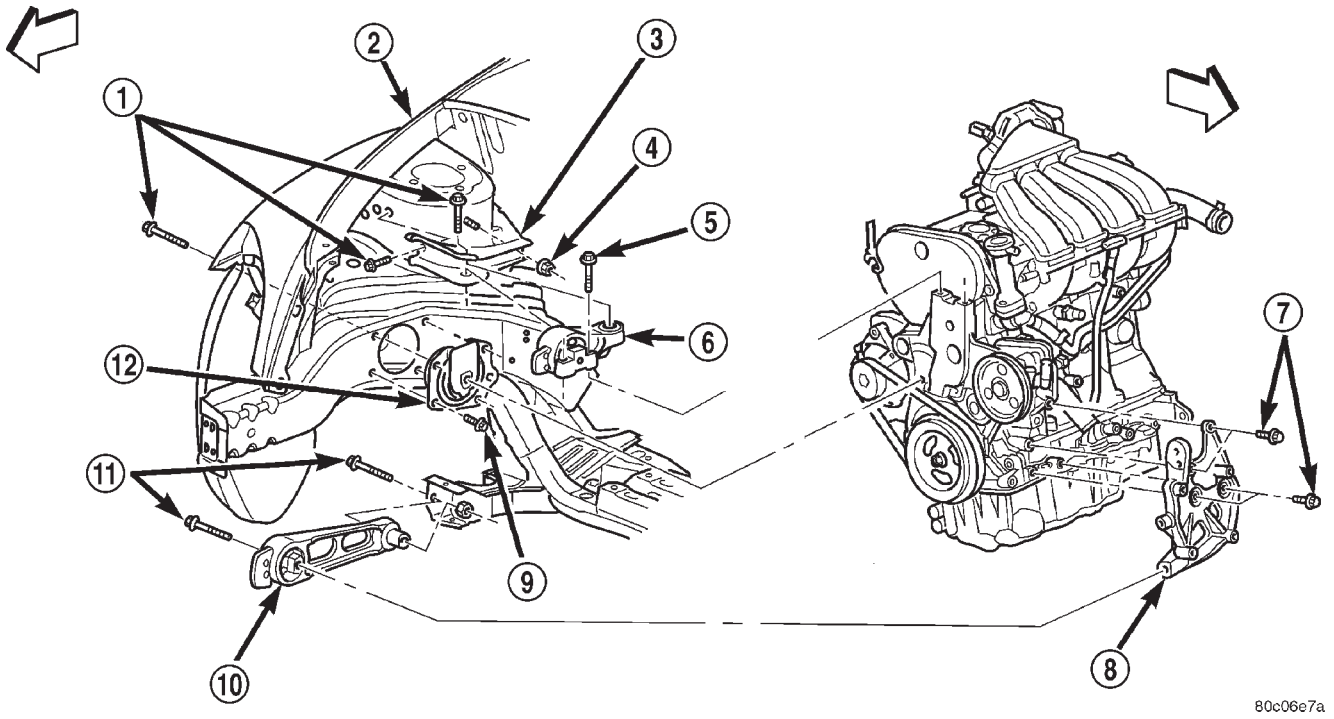

Fig. 31 Torque Struts—Upper and Lower

1 – BOLT
2 – RIGHT FENDER
3 – UPPER TORQUE STRUT BRACKET
4 – NUT
5 – BOLT
6 – UPPER TORQUE STRUT
7 – BOLT
8 – LOWER TORQUE STRUT BRACKET
9 – BOLT
10 – LOWER TORQUE STRUT
11 – BOLT
12 – RIGHT ENGINE MOUNT

REMOVAL AND INSTALLATION (Continued)

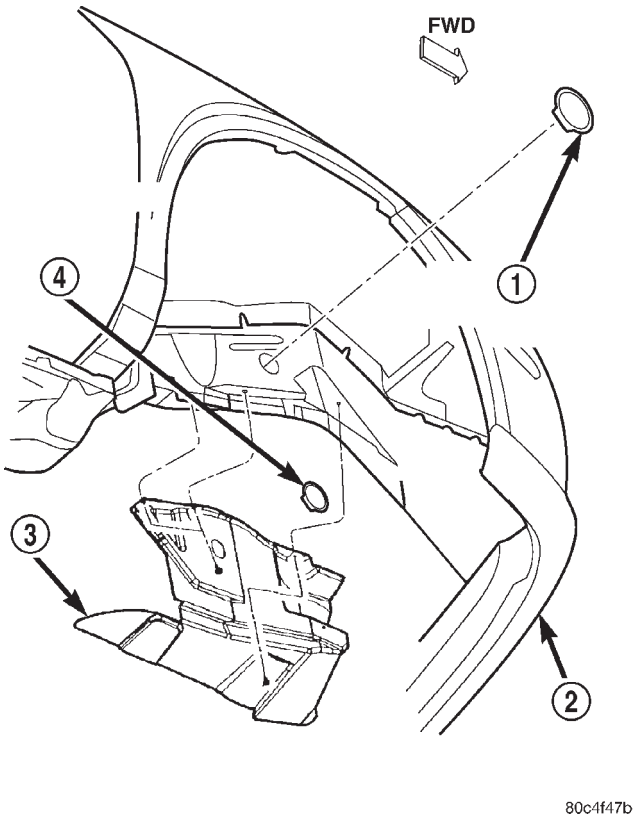

Fig. 32 Splash Shield

1 – RIGHT MOUNT BOLT ACCESS PLUG
2 – FASCIA
3 – SPLASH SHIELD
4 – CRANKSHAFT BOLT ACCESS PLUG

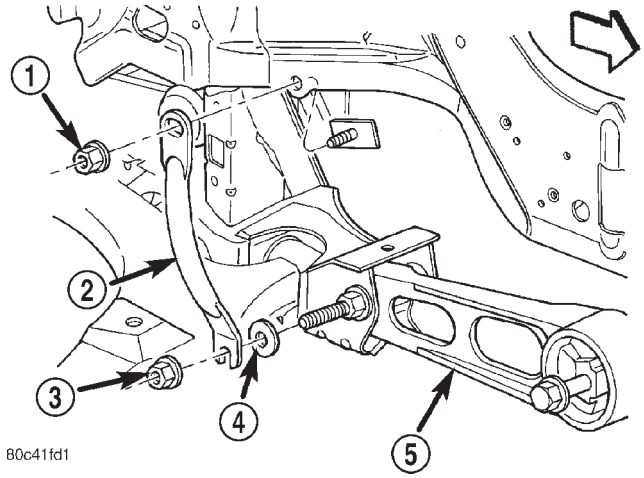

Fig. 33 Pencil Strut

1 – NUT
2 – PENCIL STRUT
3 – NUT
4 – FLAT WASHER
5 – LOWER TORQUE STRUT

(3) Install pencil strut and tighten nuts to 58 N·m (43 ft. lbs.) (Fig. 33).

(4) Install accessory belt splash shield (Fig. 32) and lower vehicle

TORQUE STRUT ADJUSTMENT

The upper and lower torque struts need to be adjusted together to assure proper engine mount load balance and engine positioning. Whenever a torque strut bolt(s) is loosened, the following procedure must be performed.

(1) Remove pencil strut, if not previously performed (Fig. 33).

(2) Loosen the upper and lower torque strut attaching bolt at the suspension crossmember and shock tower bracket.

(3) The engine position may now be adjusted by positioning a suitable floor jack on the forward edge of the transmission bell housing (Fig. 34).

NOTE: The floor jack must be positioned as shown in (Fig. 34) to prevent minimal upward lifting of the engine.

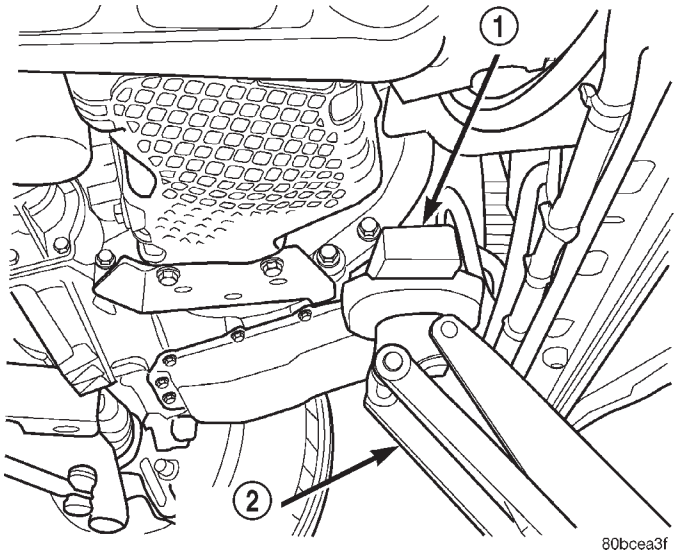

Fig. 34 Floor Jack Positioning

1 – WOOD BLOCK
2 – FLOOR JACK

(4) Carefully apply upward force, allowing the upper engine to rotate rearward until the distance between the center of the rearmost attaching bolt on the engine mount bracket (point “A”) and the center of the hole on the shock tower bracket (point “B”) is 119 mm (4.70 in.) (Fig. 35).

CAUTION: The engine must be held in position with jack until both the upper and lower torque strut bolts are tightened.

REMOVAL AND INSTALLATION (Continued)

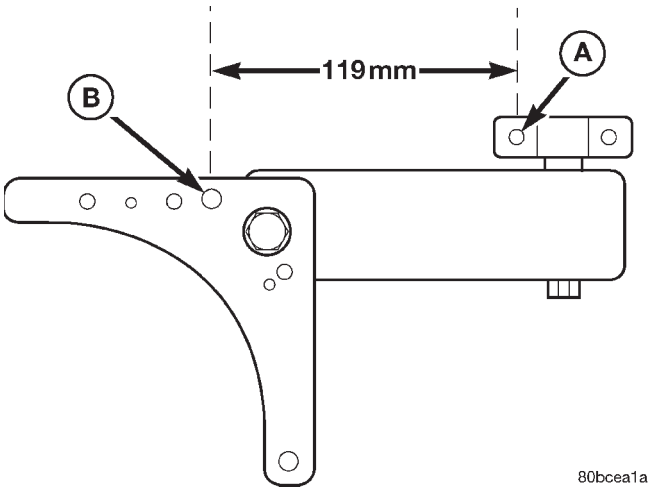

Fig. 35 Engine Position Measurement

(5) With the engine held at the proper position, tighten both the upper and lower torque strut bolts to 118 N·m (87 ft. lbs.) (Fig. 31).

(6) Remove the floor jack.

(7) Install pencil strut and tighten nuts to 58 N·m (43 ft. lbs.) (Fig. 33).

ENGINE MOUNT—LEFT

REMOVAL

(1) Remove air cleaner assembly.

(2) Disconnect negative cable from battery.

(3) Remove bolts attaching the power distribution center (PDC) bracket to left mount and battery tray (Fig. 36).

(4) Support transaxle with a suitable jack.

(5) Remove mount to transaxle bolts (Fig. 37).

(6) Remove left mount bracket to body frame rail fasteners (Fig. 37).

(7) Remove mount.

INSTALLATION

(1) Install engine mount bracket to body frame rail and tighten fasteners to 28 N·m (250 in. lbs.) (Fig. 37).

(2) Position engine/transaxle for installation of mount to transaxle bolts. Install and tighten bolts to 118 N·m (87 ft. lbs.) (Fig. 37).

(3) Remove jack from under transaxle.

(4) Install bolts attaching the power distribution center (PDC) bracket to left mount and battery tray (Fig. 36).

(5) Connect negative cable to battery.

(6) Install air cleaner assembly.

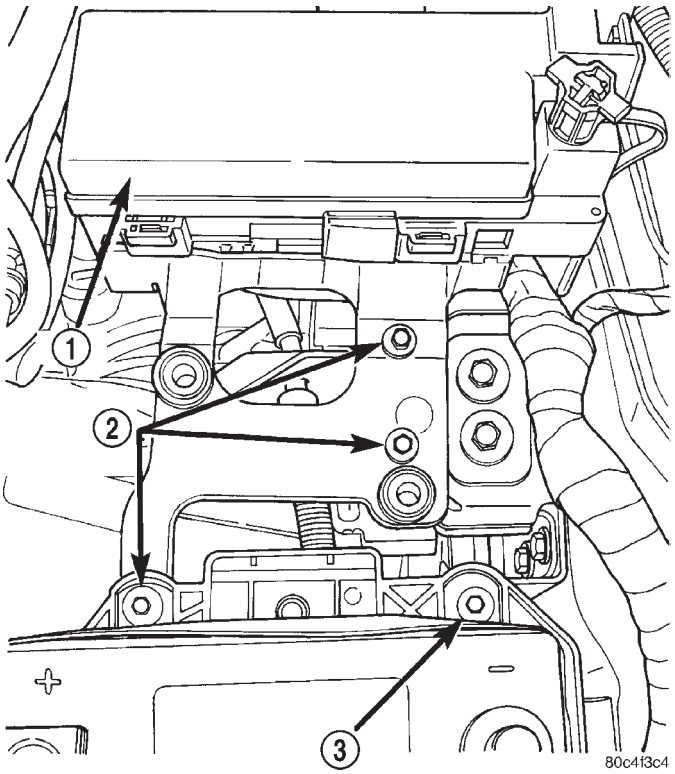

Fig. 36 PDC Bracket Attaching Bolts

1 – PDC
2 – PDC BRACKET BOLTS
3 – BATTERY TRAY BOLT

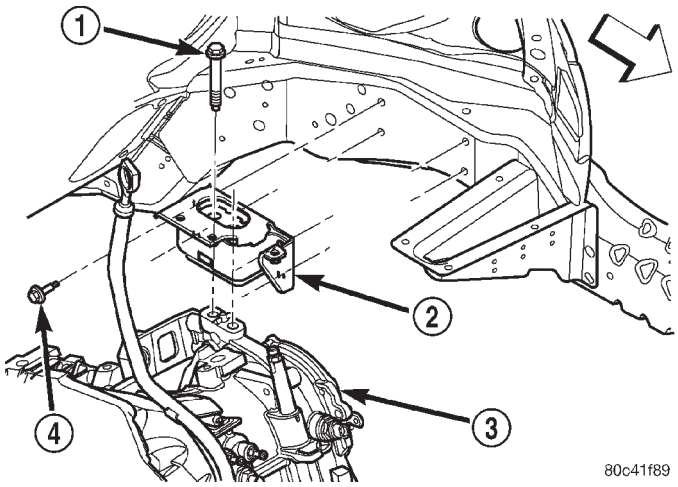

Fig. 37 Left Mount

1 – BOLT
2 – LEFT MOUNT
3 – TRANSAXLE
4 – BOLT

REMOVAL AND INSTALLATION (Continued)

ENGINE MOUNT—RIGHT

REMOVAL

(1) Remove the engine assembly for the required clearance to access the engine mount. Refer to procedures in this section.

NOTE: The right engine mount attaching holes are slightly oversize to compensate for manufacturing tolerances. The mount has been set at the manufacturing plant for proper powertrain alignment. Therefore, it is necessary to mark the position of the mount before the attaching bolts are loosened.

(2) Using a permanent ink marker or equivalent, mark the position of engine mount to the body frame rail.

(3) Remove bolts attaching mount to body (Fig. 38).

(4) Remove mount.

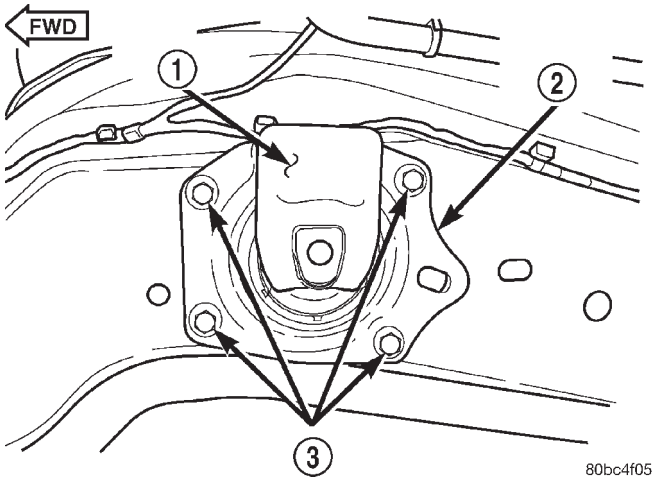

Fig. 38 Engine Mount—Right

1 – SNUBBER PAD
2 – RIGHT ENGINE MOUNT
3 – BOLTS

INSTALLATION

(1) Position mount into the original position on body frame rail (Fig. 38).

NOTE: Engine mount must be installed in the original position on body frame rail. If mount was not marked or frame rail was replaced, perform the following procedure.

(2) Perform the following procedure if the mount position was not previously marked, or the frame rail was replaced:

a. Insert new mount loosely in frame rail.

b. Align the four holes in the mount with the mating holes in the rail such that the holes are concentric (frame rail holes centered in the mount holes).

c. Using a permanent ink marker or equivalent, mark the position of engine mount to the body frame rail while maintaining mounting hole concentricity.

(3) Ensure the mount maintains originally marked position and install mount bolts. Tighten bolts to 28 N·m (250 in. lbs.) (Fig. 38).

(4) Install the engine assembly. Refer to procedures in this section.

STRUCTURAL COLLAR

STRUCTURAL COLLAR—AUTOMATIC TRANSAXLE EQUIPPED

REMOVAL

(1) Raise vehicle on hoist.

(2) Remove bolts attaching bending strut to engine and transaxle (Fig. 39).

(3) Remove bolts attaching collar and strut to engine, oil pan, and transaxle (Fig. 39). Remove strut and collar.

INSTALLATION

CAUTION: Torque procedure for the structural collar and bending strut must be followed or damage could occur to oil pan, collar, and/or bending strut.

(1) Perform the following steps for installing structural collar and bending strut. Refer to (Fig. 39) :

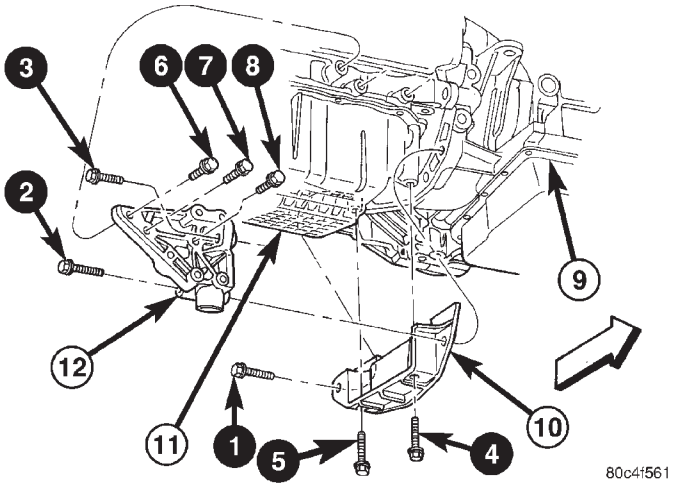

Fig. 39 Structural Collar and Bending Strut—(Automatic Transaxle Equipped)

1–8 – BOLT TIGHTENING SEQUENCE
9 – TRANSAXLE
10 – COLLAR
11 – OIL PAN
12 – STRUT

REMOVAL AND INSTALLATION (Continued)

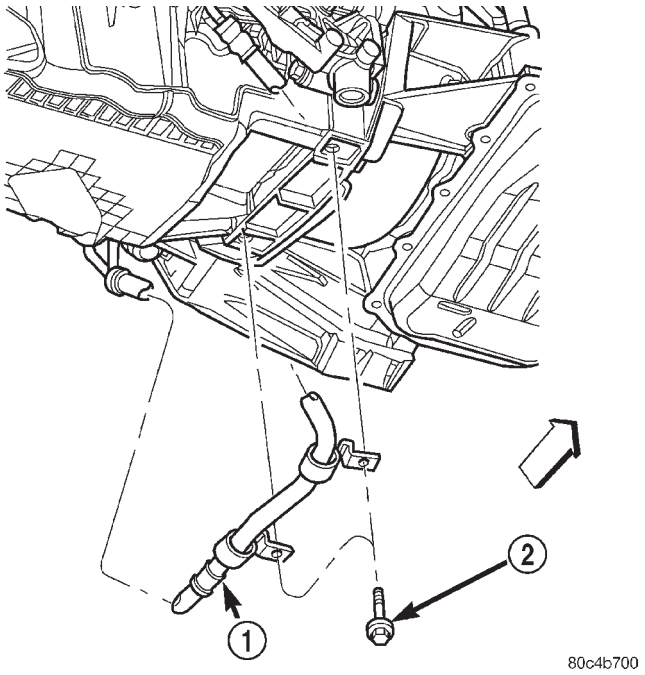

Fig. 40 Power Steering Hose To Structural Collar

1 – POWER STEERING HOSE
2 – BOLT

- Step 1: Place collar into position between transaxle and oil pan. Install collar to transaxle bolt (1), **hand start only**.
- Step 2: Position power steering hose support bracket (Fig. 40) and install collar to oil pan bolt (4), **hand tight only.**
- Step 3: Position bending strut in place and **hand start only** bolt (3) into the upper transaxle hole.
- Step 4: Install bolt (2), through strut and collar, **hand start only**.
- Step 5: Install bolt (6), strut to cylinder block, **hand tight only.**
- Step 6: Position power steering hose support bracket (Fig. 40) and install the remaining collar to oil pan bolt (5), **hand tight only.**
- Step 7: Final torque collar to transaxle bolts (1–3), to 101 N·m (75 ft. lbs.)
- Step 8: Install bolts (7) and (8), through strut and into cylinder block.
- Step 9: Final torque bolts (4–8) to 61 N·m (45 ft. lbs.).

(2) Lower vehicle.

STRUCTURAL COLLAR—MANUAL TRANSAXLE EQUIPPED

REMOVAL

(1) Raise vehicle on hoist.

(2) Remove bolts attaching bending strut to engine and transaxle (Fig. 41). Remove strut.

(3) Remove bolts attaching collar and clutch slave cylinder to transaxle (Fig. 41).

(4) Remove remaining bolts attaching collar to oil pan and transaxle (Fig. 41). Remove collar.

INSTALLATION

CAUTION: Torque procedure for the structural collar and bending strut must be followed or damage could occur to oil pan, collar, and/or bending strut.

(1) Perform the following steps for installing structural collar and bending strut. Refer to (Fig. 41) :

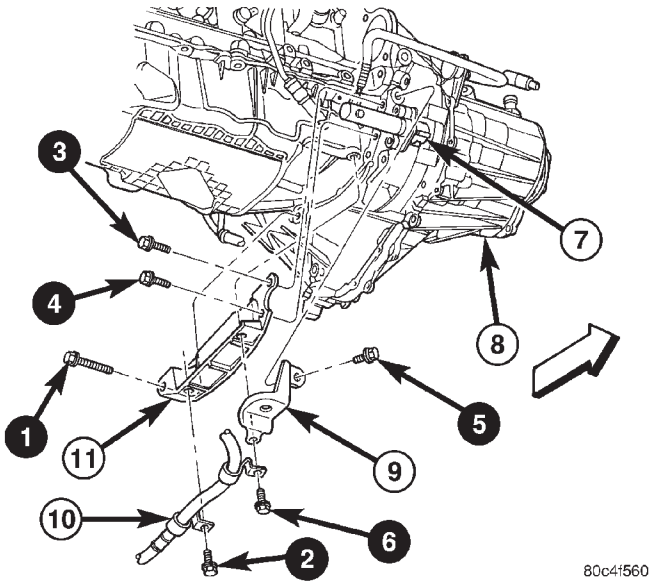

Fig. 41 Structural Collar and Bending Strut— (Manual Transaxle Equipped)

1–6 – BOLT TIGHTENING SEQUENCE
7 – HYDRAULIC CLUTCH SLAVE CYLINDER
8 – TRANSAXLE
9 – STRUT
10 – POWER STEERING HOSE
11 – COLLAR

- Step 1: Place collar into position between transaxle and oil pan. Install collar to transaxle bolt (1), **hand start only**.
- Step 2: Position power steering hose support bracket (Fig. 41) and install collar to oil pan bolt (2), **hand tight only**.
- Step 3: Position clutch slave cylinder into mounting position and install bolts (3) and (4) **hand tight only**.
- Step 4: Position bending strut in place and **hand start only** bolt (5) into the upper transaxle hole.

REMOVAL AND INSTALLATION (Continued)

• Step 5: Position power steering hose support bracket and install the remaining collar to oil pan bolt (6) **hand tight only**.

• Step 6: Final torque all bolts in sequence shown in (Fig. 41) to the following torque values:

• Bolts (1) and (5) to 101 N·m (75 ft. lbs.)
• Bolts (2) and (6) to 61 N·m (45 ft. lbs.)
• Bolts (3) and (4) to 28 N·m (20 ft. lbs.)

(2) Lower vehicle.

ENGINE ASSEMBLY

REMOVAL

(1) Perform fuel pressure release procedure, then disconnect and remove fuel line. Refer to FUEL SYSTEM for procedure.

(2) Remove air cleaner housing assembly and clean air hose.

(3) Disconnect both cables from battery.

(4) Remove battery hold down clamp and bolt, and remove battery (Fig. 42).

(5) Remove battery tray (Fig. 43).

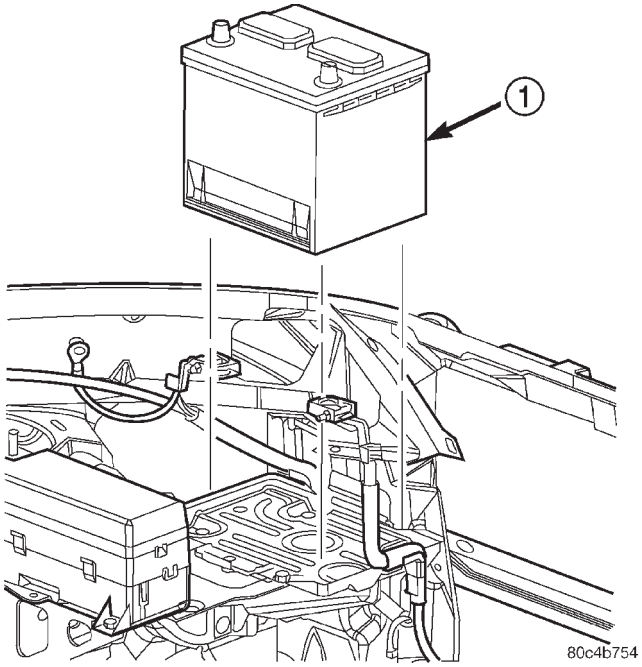

Fig. 42 Battery—Removal/Installation

1 – BATTERY

(6) Drain cooling system. Refer to COOLING SYSTEM for procedure.

(7) Discharge air conditioning system, if equipped. Refer to HEATING AND AIR CONDITIONING for procedure.

(8) Disconnect throttle and speed control cables.

(9) Disconnect engine wiring harness at Powertrain Control Module (PCM) connector.

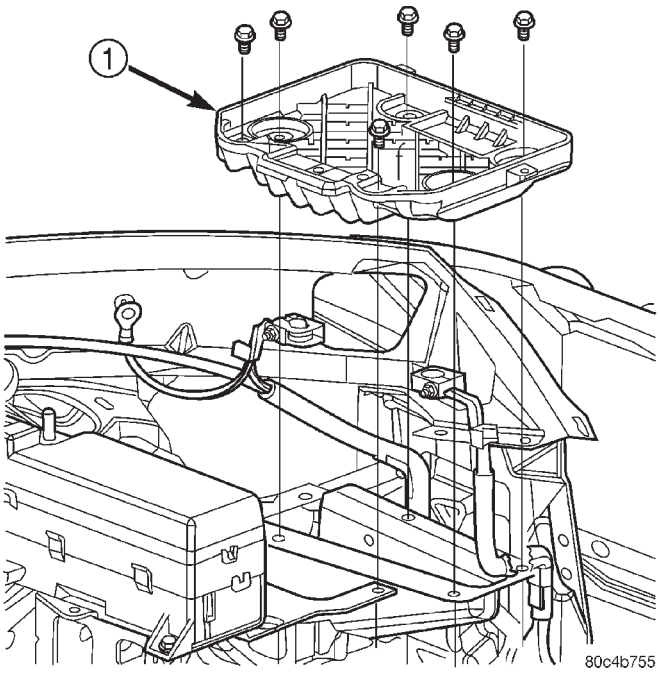

Fig. 43 Battery Tray—Removal/Installation

1 – BATTERY TRAY

(10) Disconnect positive cable from Power Distribution Center (PDC) and ground wire from vehicle body. Remove bolts attaching PDC and set aside (Fig. 44).

(11) Disconnect wiring connectors at lower battery tray support.

(12) Disconnect ground wire from the vehicle body-to-engine at the right side strut tower.

(13) Disconnect brake booster vacuum hose from intake manifold.

(14) Disconnect the proportional purge hoses from intake manifold.

(15) Disconnect coolant reserve/recovery hose from coolant outlet connector.

(16) Disconnect heater hoses.

(17) Remove upper radiator support crossmember. Refer to BODY for procedure.

(18) Remove upper radiator hose.

(19) Remove lower radiator hose.

(20) Disconnect upper A/C line from A/C condenser. Refer to HEATING AND AIR CONDITIONING for procedure.

(21) Disconnect A/C lines at junction near upper torque strut. Refer to HEATING AND AIR CONDITIONING for procedure.

(22) Disconnect automatic transmission cooler lines and plug, if equipped.

(23) Disconnect fan electrical connector and remove cooling module assembly (fan, radiator, A/C condenser). Refer to COOLING SYSTEM for procedure

REMOVAL AND INSTALLATION (Continued)

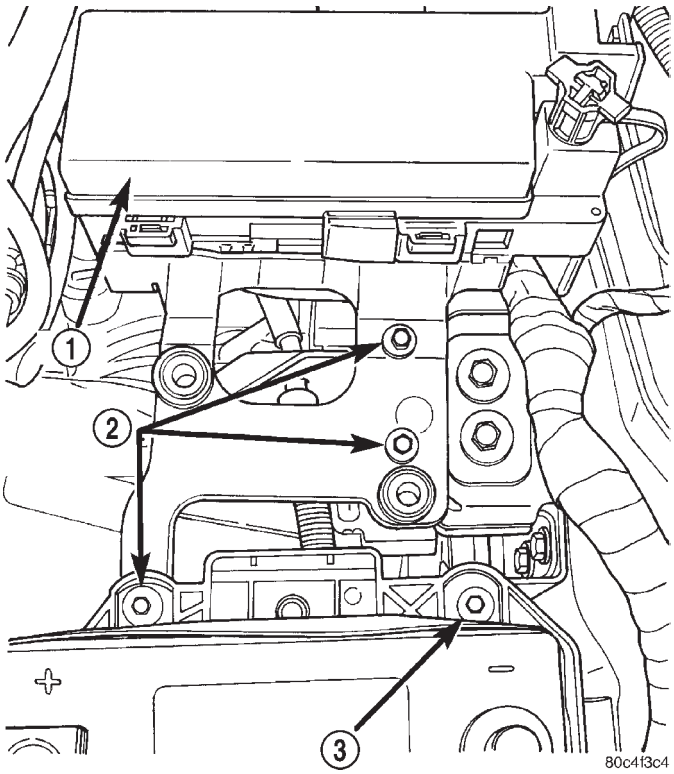

Fig. 44 PDC Bracket Attaching Bolts

1 – PDC
2 – PDC BRACKET BOLTS
3 – BATTERY TRAY BOLT

(24) Disconnect shift linkage and transaxle electrical connectors. Refer to TRANSAXLE for procedure.

(25) Disconnect clutch hydraulic line at quick-disconnect fitting (Fig. 45) using Special Tool 6638 (if manual transaxle equipped) (Fig. 46).

(26) Hoist vehicle and remove front wheels.

(27) Remove right inner splash shield.

(28) Remove axle shafts. Refer to DIFFERENTIAL AND DRIVELINE for procedure.

(29) Remove accessory drive belts. Refer to COOLING SYSTEM for procedure.

(30) Remove generator and support brackets.

(31) Drain engine oil.

(32) Disconnect the downstream oxygen sensor connector.

(33) Disconnect exhaust system from manifold (Fig. 47).

(34) Disconnect power steering pressure hose from steering gear (Fig. 48).

(35) Remove lower engine torque strut. Refer to procedure in this section.

(36) Remove structural collar. Refer to procedure in this section.

(37) Remove torque converter bolts.

(38) Lower vehicle and remove A/C compressor.

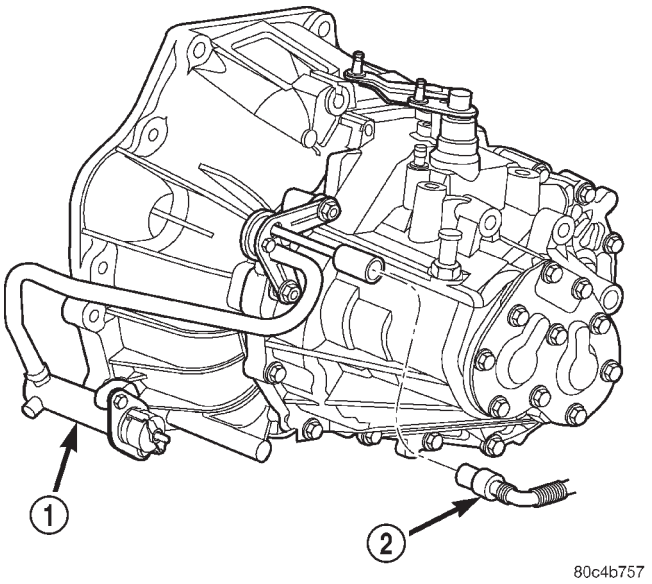

Fig. 45 Clutch Hydraulic Line to Slave Cylinder— (Manual Transaxle Equipped)

1 – SLAVE CYLINDER
2 – HYDRAULIC TUBE

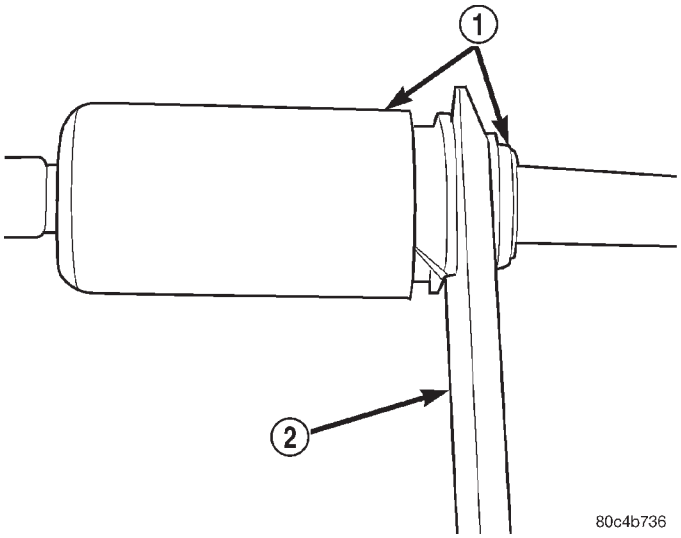

Fig. 46 Disconnecting Clutch Hydraulic Line— (Manual Transaxle Equipped)

1 – QUICK CONNECT FITTING
2 – TOOL 6638A

(39) Disconnect power steering fluid return line from reservoir (Fig. 49).

(40) Remove power steering pump. Refer to STEERING for procedure.

(41) Raise vehicle enough to allow engine dolly and cradle, Special Tools 6135 and 6710 to be installed under vehicle.

(42) Loosen engine support posts to allow movement for positioning onto engine locating holes and

REMOVAL AND INSTALLATION (Continued)

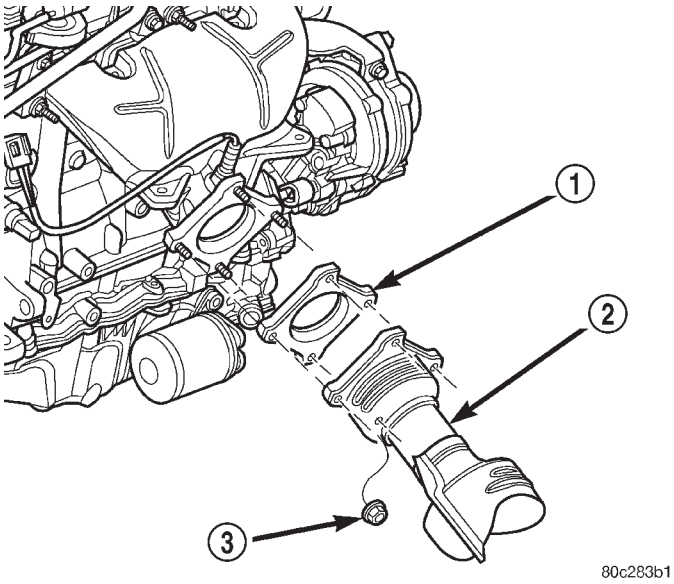

Fig. 47 Exhaust System To Manifold Connection

1 – GASKET
2 – CATALYTIC CONVERTER
3 – NUT

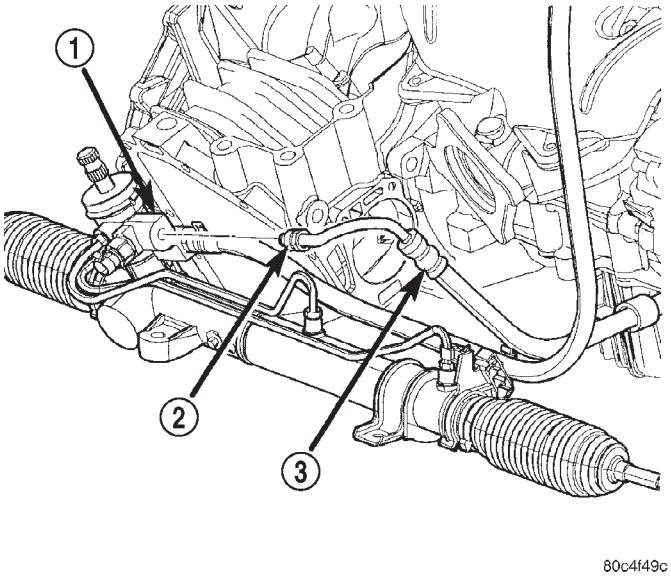

Fig. 48 Power Steering Fluid Pressure Hose

1 – STEERING GEAR
2 – FITTING
3 – POWER STEERING PRESSURE HOSE

flange on the engine bedplate. Lower vehicle and position cradle until the engine is resting on support posts (Fig. 52). Tighten mounts to cradle frame. This will keep support posts from moving when removing or installing engine and transmission.

(43) Install safety straps around the engine to cradle (Fig. 52). Tighten straps and lock them into position.

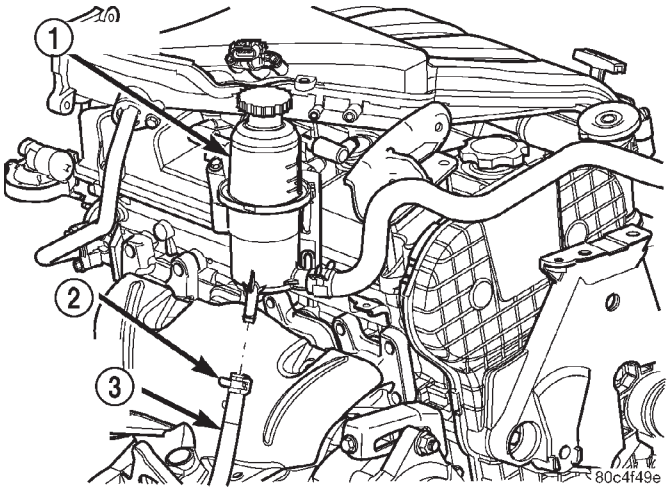

Fig. 49 Power Steering Fluid Return Hose

1 – RESERVOIR
2 – CLAMP
3 – POWER STEERING RETURN LINE

WARNING: Safety straps MUST be used.

(44) Raise vehicle enough to determine if straps are secure enough to hold cradle assembly to engine.

(45) Lower vehicle so weight of the engine and transmission ONLY is on the cradle assembly.

(46) Remove the upper engine torque strut.

(47) Remove right mount through bolt (Fig. 50) and left mount attaching bolts (Fig. 51)

(48) Raise vehicle slowly until engine/transaxle assembly clears engine compartment. It may be necessary to move the engine/transmission assembly with the cradle to allow for removal around body flanges.

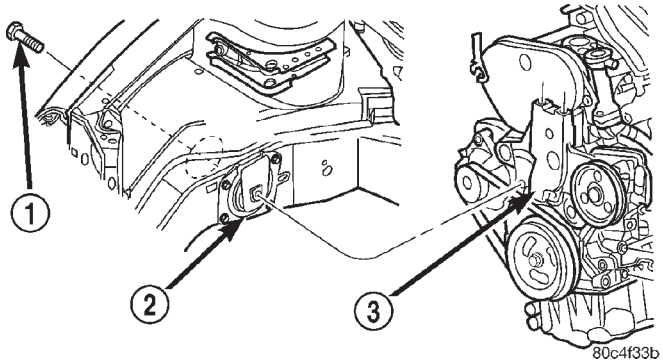

Fig. 50 Right Mount Through Bolt

1 – BOLT
2 – RIGHT ENGINE MOUNT
3 – ENGINE MOUNT BRACKET

REMOVAL AND INSTALLATION (Continued)

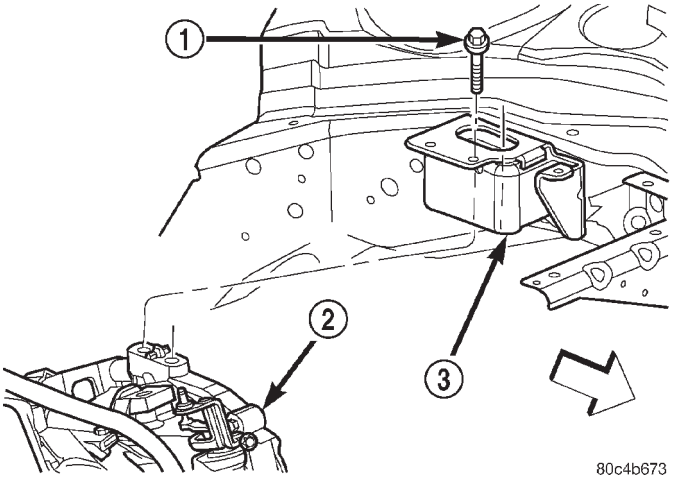

Fig. 51 Left Mount Bolts

1 – BOLT
2 – TRANSAXLE
3 – LEFT MOUNT

INSTALLATION

(1) Position engine and transmission assembly under vehicle and slowly lower the vehicle over the engine/transaxle assembly.

(2) Continue lowering vehicle until engine/transaxle aligns to mounting locations. Install mounting bolts at the right and left engine/transaxle mounts (Fig. 50) and (Fig. 51). Tighten bolts to 118 N·m (87 ft. lbs.).

(3) Install upper torque strut. Refer to procedure in this section.

(4) Remove safety straps from engine/transaxle assembly. Slowly raise vehicle enough to remove the engine dolly and cradle.

(5) Install generator and mounting brackets.

(6) Install axle shafts. Refer to DIFFERENTIAL AND DRIVELINE for procedure.

(7) Install structural collar. Refer to procedure in this section for tightening sequence.

(8) Install lower engine torque strut. Refer to procedure in this section.

(9) Connect exhaust system to manifold (Fig. 47).

(10) Connect the downstream oxygen sensor.

(11) Connect power steering fluid pressure hose to steering gear (Fig. 48).

(12) Install A/C compressor and hoses. Refer to HEATING AND AIR CONDITIONING for procedure.

(13) Install power steering pump. Refer to STEERING for procedure.

(14) Install accessory drive belts. Refer to COOLING SYSTEM for belt tension adjustment.

(15) Install inner splash shield.

(16) Install wheels and lower vehicle.

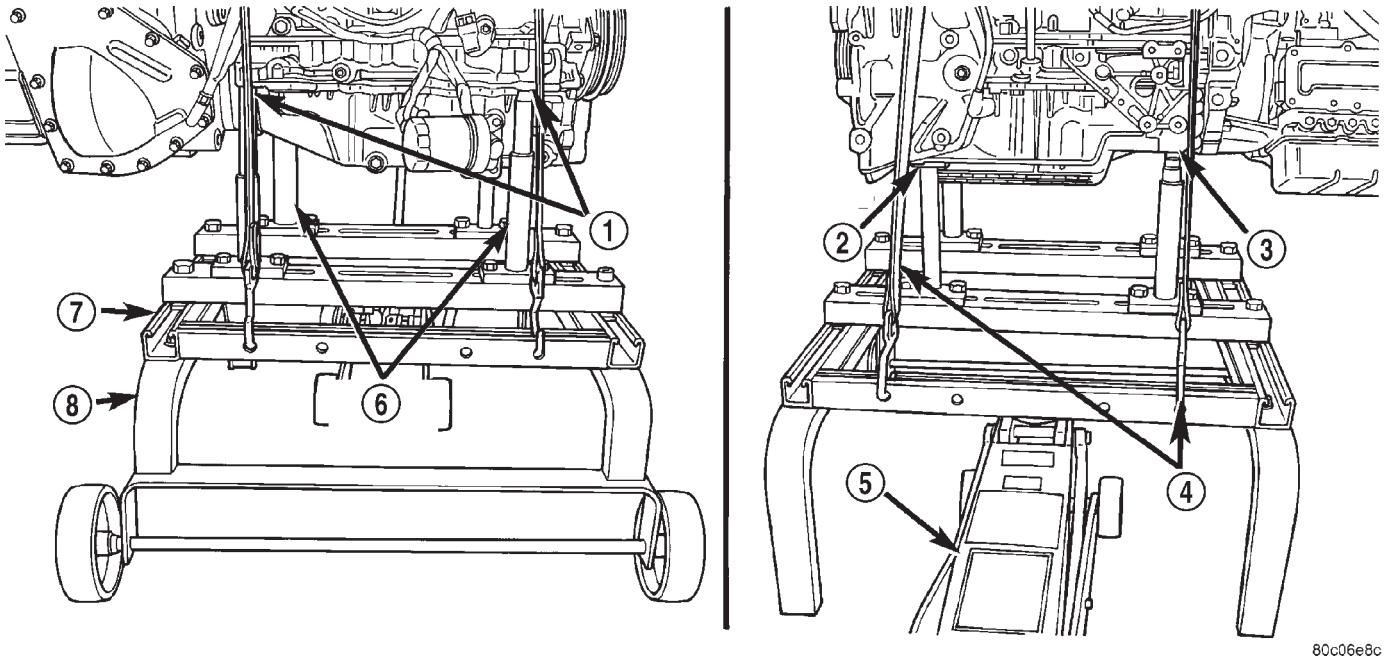

Fig. 52 Positioning Engine Cradle Support Post

1 – POST LOCATING HOLES IN BLOCK
2 – POST POSITIONED UNDER BRACKET
3 – POST LOCATING HOLE IN STRUT
4 – SAFETY STRAPS
5 – FLOOR JACK
6 – SPECIAL TOOL 6848
7 – SPECIAL TOOL 6135
8 – SPECIAL TOOL 6710

REMOVAL AND INSTALLATION (Continued)

(17) Connect power steering fluid return hose to reservoir (Fig. 49). Fill power steering fluid reservoir to proper level.

(18) **Manual Transmission:** Connect clutch hydraulic line (Fig. 45), electrical connector and shift linkages.

NOTE: It is not necessary to bleed the clutch hydraulic system. The quick-connect fittings close immediately after disconnection; allowing no fluid to escape.

(19) **Automatic Transmission:** Connect shift linkage and cooler lines.

(20) Connect fuel line and heater hoses.

(21) Install all ground straps and connect engine wiring harness. Refer to WIRING DIAGRAMS.

(22) Install lower radiator hose, fan module, and upper radiator hose. Refer to COOLING SYSTEM for procedures.

(23) Position PDC and install bolts (Fig. 44). Connect positive battery cable to PDC and ground wire to vehicle body.

(24) Install battery tray (Fig. 43) and battery (Fig. 42).

(25) Connect cables to battery.

(26) Install air cleaner housing assembly and connect clean air hose to intake manifold.

(27) Connect throttle and speed control cables.

(28) Install oil filter. Fill engine crankcase with proper oil to correct level.

(29) Fill cooling system. Refer to COOLING SYSTEM for filling procedure.

(30) Perform camshaft and crankshaft synchronization procedure. Refer to procedure in this section.

(31) Start engine and run until operating temperature is reached.

(32) Ensure engine is properly positioned. Refer to Torque Struts in this section for adjustment procedure.

(33) Adjust transmission linkage, if necessary.

INTAKE MANIFOLD—UPPER

REMOVAL

(1) Disconnect inlet air temperature sensor and make-up air hose from clean air hose (Fig. 53).

(2) Remove air cleaner housing and clean air hose assembly.

(3) Disconnect negative cable from battery.

(4) Remove engine cover by pulling upward to release from ball stud retainers (Fig. 63).

(5) Remove throttle and speed control cables from throttle lever and bracket. Refer to FUEL SYSTEM for procedures.

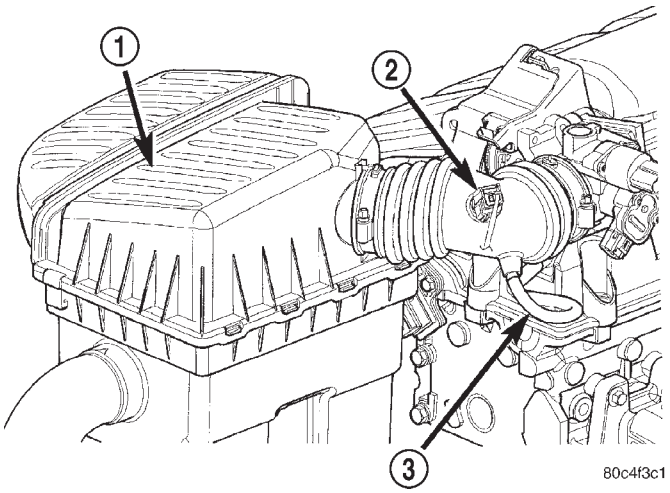

Fig. 53 Clean Air Hose

1 – AIR CLEANER HOUSING
2 – INLET AIR TEMPERATURE SENSOR
3 – MAKE-UP AIR HOSE

(6) Disconnect manifold absolute pressure (MAP) sensor, idle air control (IAC) motor and throttle position sensor (TPS) wiring connectors (Fig. 55).

(7) Disconnect proportional purge hoses (Fig. 56).

(8) Disconnect brake booster hose (Fig. 54).

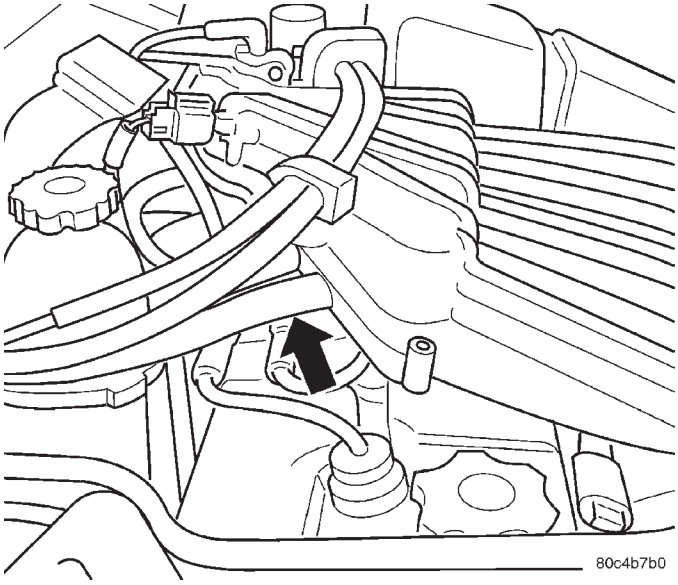

Fig. 54 Brake Booster Hose

(9) Disconnect PCV hose from intake manifold (Fig. 58).

(10) Remove throttle body support bracket bolt at the throttle body (Fig. 58).

(11) Remove EGR tube bolts at the upper intake manifold (Fig. 59).

(12) Remove upper intake manifold fasteners (Fig. 61).

(13) Remove upper intake manifold.

REMOVAL AND INSTALLATION (Continued)

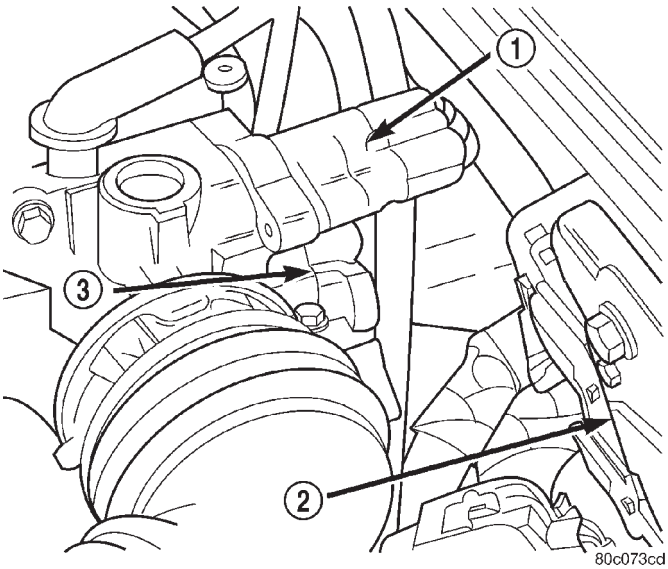

Fig. 55 Idle Air Control (IAC) Motor and Throttle Position Sensor (TPS) Wiring Connectors

1 – IAC
2 – PCM
3 – TPS

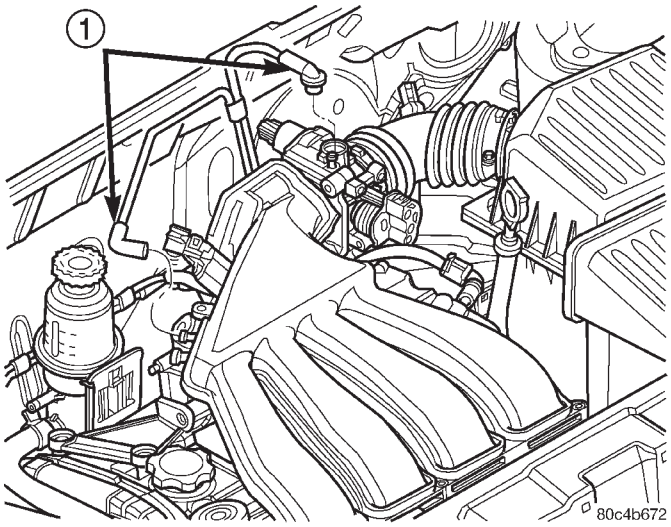

Fig. 56 Proportional Purge Hoses

1 – PROPORTIONAL PURGE HOSES

(14) If further service is required, cover the lower intake manifold openings to prevent foreign materials from entering the engine (Fig. 60).

INSTALLATION

(1) Clean all sealing surfaces. Replace seals as necessary.

(2) Position new seals on manifold, if replaced.

(3) Inspect EGR tube seal (Fig. 62). Replace as necessary.

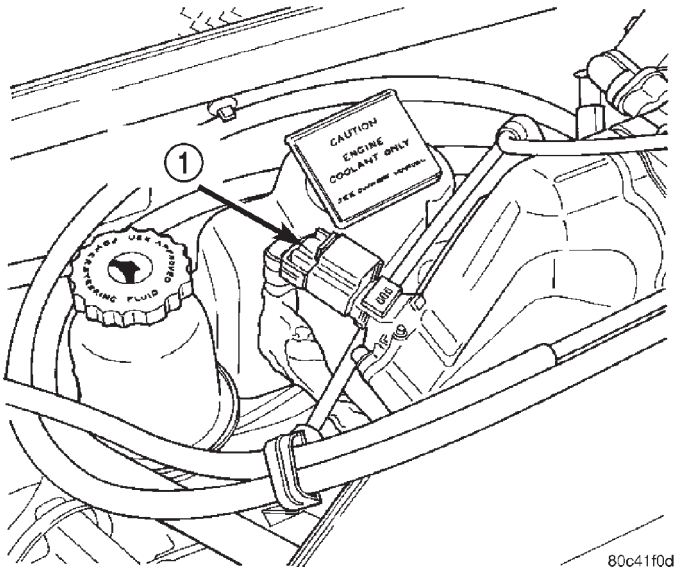

Fig. 57 MAP Sensor

1 – MAP SENSOR

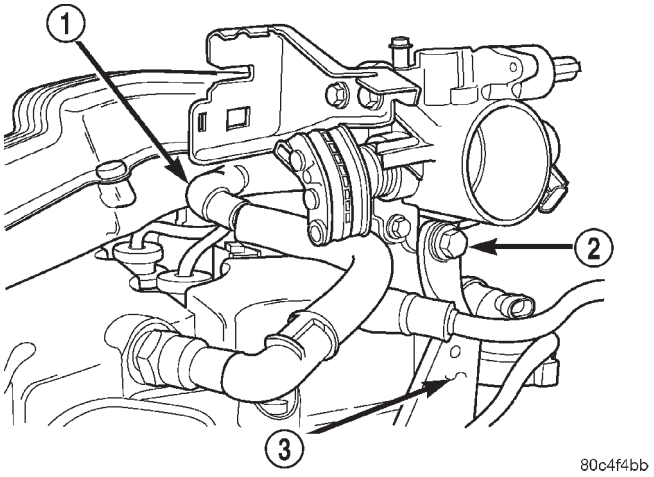

Fig. 58 Throttle Body Support Bracket and PCV Hose

1 – PCV HOSE
2 – BOLT
3 – SUPPORT BRACKET

(4) First, carefully position the upper intake manifold onto the EGR tube (Fig. 62). Then position upper intake manifold on lower intake manifold. Tighten upper intake manifold fasteners to 12 N·m (105 in. lbs.) in sequence shown in (Fig. 61).

(5) Install throttle body support bracket bolt at throttle body (Fig. 58). Tighten bolt to 28 N·m (20 ft. lbs.).

(6) Position EGR tube retainer plate and install bolts (Fig. 59). Tighten smaller bolt to 11 N·m (95 in. lbs.) and larger bolt to 28 N·m (20 ft. lbs.).

(7) Connect PCV hose to intake manifold (Fig. 58).

REMOVAL AND INSTALLATION (Continued)

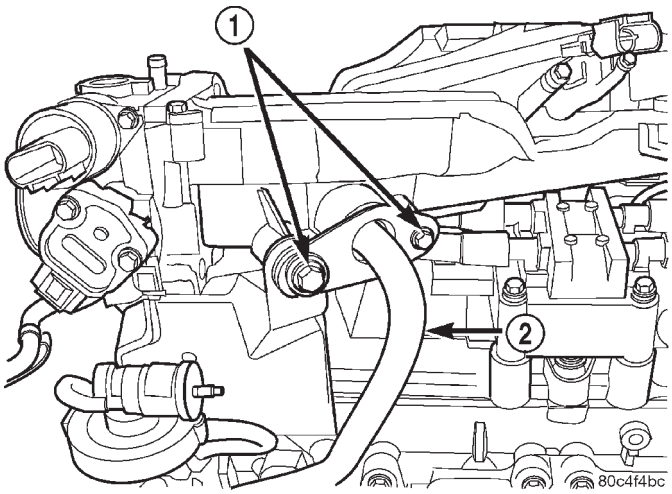

Fig. 59 EGR Tube

1 – BOLTS
2 – EGR TUBE

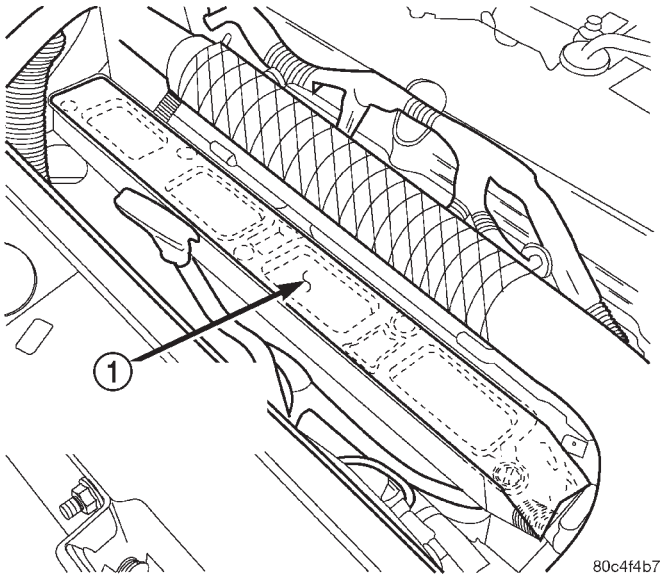

Fig. 60 Cover Lower Intake Manifold Openings

1 – INTAKE MANIFOLD MUST BE COVERED DURING SERVICE

(8) Connect manifold absolute pressure (MAP) electrical connector (Fig. 57).

(9) Connect proportional purge hoses (Fig. 56).

(10) Connect brake booster hose (Fig. 54).

(11) Connect Idle Air Control (IAC) motor and Throttle Position Sensor (TPS) wiring connectors (Fig. 55).

(12) Install throttle and speed control cables to bracket. Connect cables to the throttle lever. Refer to FUEL SYSTEM for throttle body installation procedure.

(13) Connect negative cable to battery.

(14) Install air cleaner housing and clean air hose. Tighten clean air hose clamp to 1.7 N·m (15 in. lbs.).

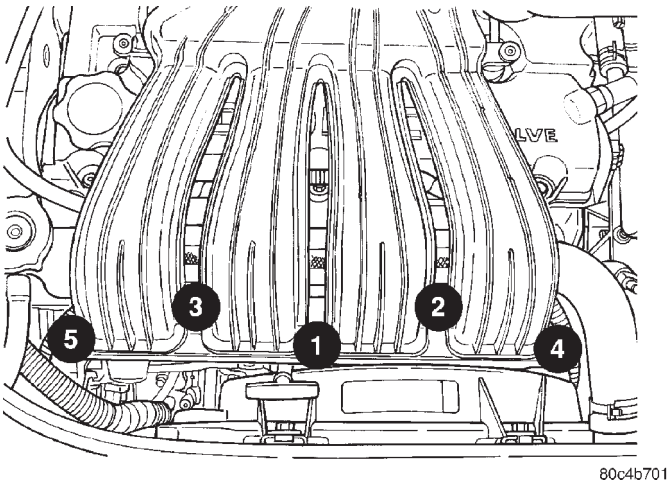

Fig. 61 Intake Manifold Tightening Sequence

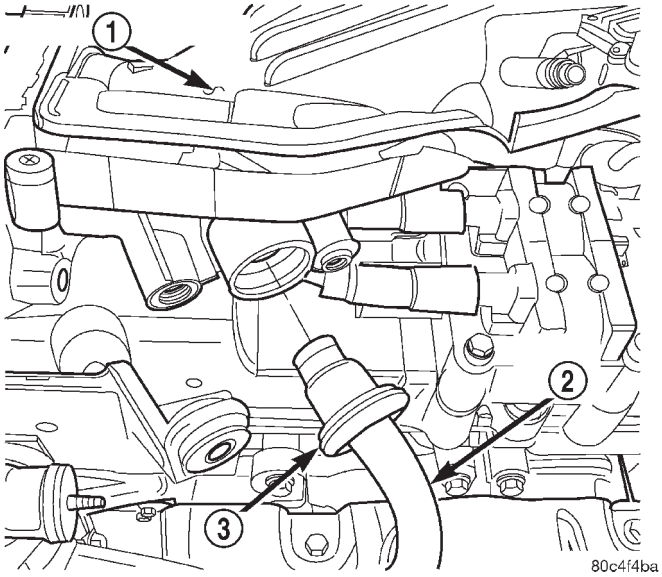

Fig. 62 Upper Intake Manifold to EGR Tube

1 – INTAKE MANIFOLD
2 – EGR TUBE
3 – SEAL

(15) Connect make-up air hose and inlet air temperature sensor (Fig. 53).

(16) Install engine cover by positioning on ball studs and gently press down until seated (Fig. 63).

INTAKE MANIFOLD—LOWER

REMOVAL

WARNING: RELEASE FUEL SYSTEM PRESSURE BEFORE SERVICING SYSTEM COMPONENTS. SERVICE VEHICLES IN WELL VENTILATED AREAS AND AVOID IGNITION SOURCES. NEVER SMOKE WHILE SERVICING THE VEHICLE.

REMOVAL AND INSTALLATION (Continued)

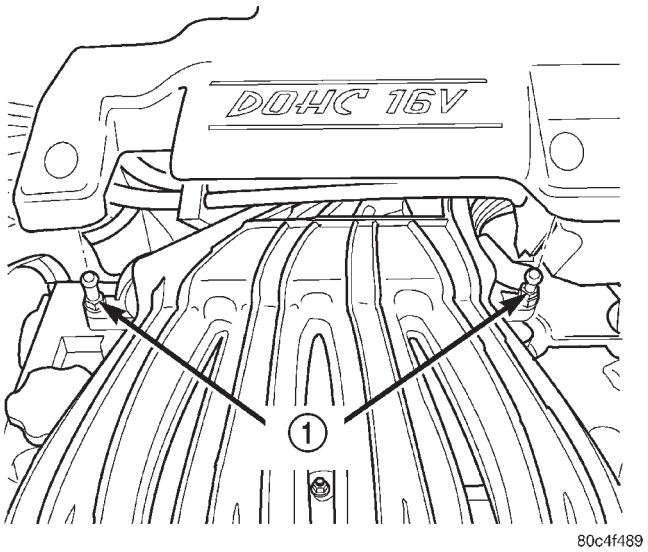

Fig. 63 Engine Cover

1 – BALL STUDS

(1) Perform fuel system pressure release procedure **before attempting any repairs.** Refer to FUEL SYSTEM for procedure.

(2) Disconnect inlet air temperature sensor and make-up air hose.

(3) Remove air cleaner housing and clean air hose.

(4) Disconnect negative cable from battery.

(5) Remove upper intake manifold. Refer to procedure in this section.

(6) Drain cooling system below thermostat level. Refer to COOLING SYSTEM for procedure.

(7) Remove upper radiator hose.

(8) Remove coolant outlet connector. Refer to COOLING SYSTEM for procedure.

(9) Disconnect the fuel supply line quick connect at the fuel rail assembly. Refer to FUEL SYSTEM for procedure.

WARNING: WRAP SHOP TOWELS AROUND HOSE TO CATCH ANY GASOLINE SPILLAGE.

(10) Disconnect fuel injector wiring harness.

(11) Remove screw attaching the oil dipstick tube to lower intake manifold (Fig. 64).

(12) Remove lower intake manifold fasteners (Fig. 66).

(13) Remove lower intake manifold.

INSTALLATION

(1) Clean all gasket surfaces. Inspect gasket and replace as necessary.

(2) Position new seals on lower intake manifold, if replaced (Fig. 65).

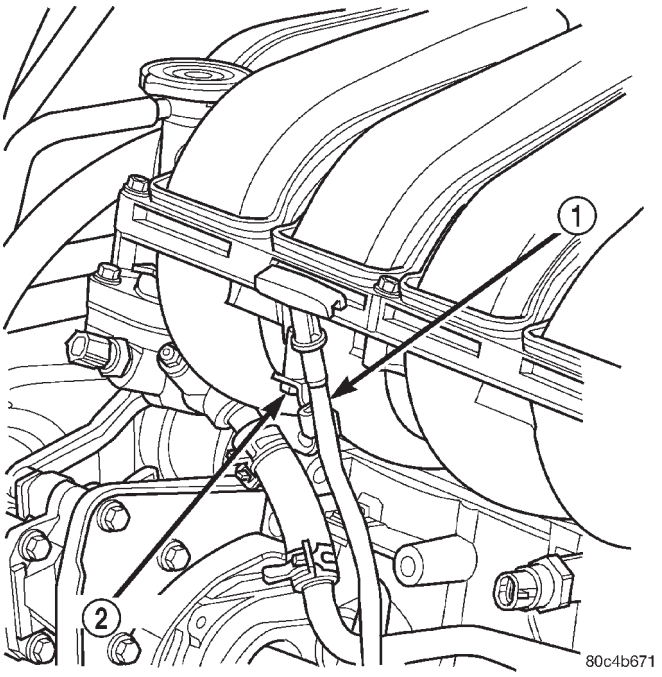

Fig. 64 Dipstick Tube

1 – DIPSTICK TUBE

2 – SCREW

(3) Install lower intake manifold. Tighten fasteners to 12 N·m (105 in. lbs.) in sequence shown in (Fig. 66).

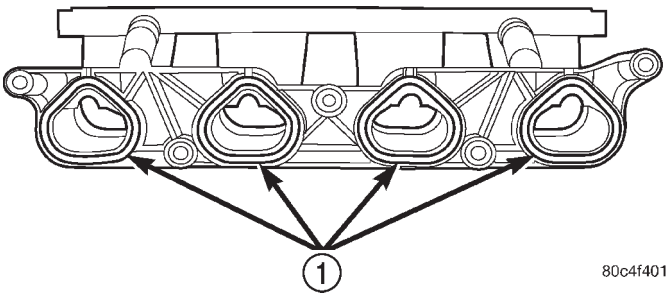

Fig. 65 Lower Intake Manifold Seals

1 – SEALS

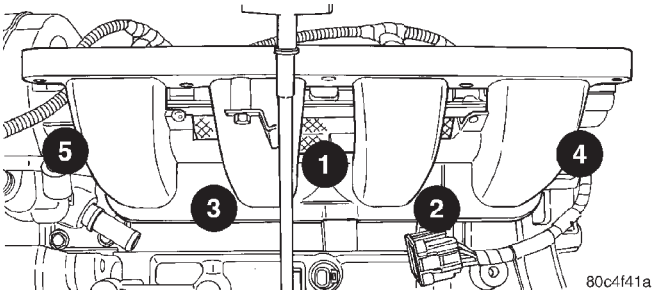

Fig. 66 Lower Intake Manifold Tightening Sequence

REMOVAL AND INSTALLATION (Continued)

(4) If removed, install the fuel rail assembly to intake manifold. Tighten screws to 23 N·m (200 in. lbs.).

(5) Connect fuel injector wiring harness.

(6) Inspect quick connect fittings for damage, replace if necessary. Refer to FUEL SYSTEM for procedure. Lubricate tube with clean engine oil. Connect fuel supply hose to fuel rail assembly. Check connection by pulling on connector to insure it locked into position.

(7) Install the screw attaching the oil dipstick tube to lower intake manifold (Fig. 64).

(8) Install radiator upper hose.

(9) Install upper intake manifold. Refer to procedures in this section.

(10) Connect negative cable to battery.

(11) Install air cleaner housing and clean air hose.

(12) Connect inlet air temperature sensor and make-up air hose.

(13) Fill the cooling system. Refer to COOLING SYSTEM for procedure.

(14) With the DRBIII® scan tool use ASD Fuel System Test to pressurize system to check for leaks.

CAUTION: When using the ASD Fuel System Test, the Auto Shutdown (ASD) relay will remain energized for 7 minutes or until the ignition switch is turned to the OFF position, or Stop All Test is selected.

EXHAUST MANIFOLD

REMOVAL

(1) Remove clean air hose and air cleaner housing.

(2) Disconnect negative cable from battery.

(3) Disconnect throttle and speed control cables from the throttle lever and bracket. Refer to FUEL SYSTEM for procedure.

(4) Disconnect MAP sensor electrical connector.

(5) Remove power steering fluid reservoir from mounting bracket (Fig. 67).

(6) Remove coolant recovery bottle. Refer to COOLING SYSTEM for procedure.

(7) Remove bolts attaching upper heat shield (Fig. 68).

(8) Remove upper heat shield.

(9) Raise vehicle.

(10) Disconnect exhaust pipe from manifold (Fig. 70).

(11) Remove engine wiring heat shield (Fig. 71).

(12) Remove manifold support bracket (Fig. 69).

(13) Remove lower exhaust manifold heat shield (Fig. 68).

(14) Disconnect oxygen sensor electrical connector.

(15) Remove exhaust manifold lower retaining fasteners.

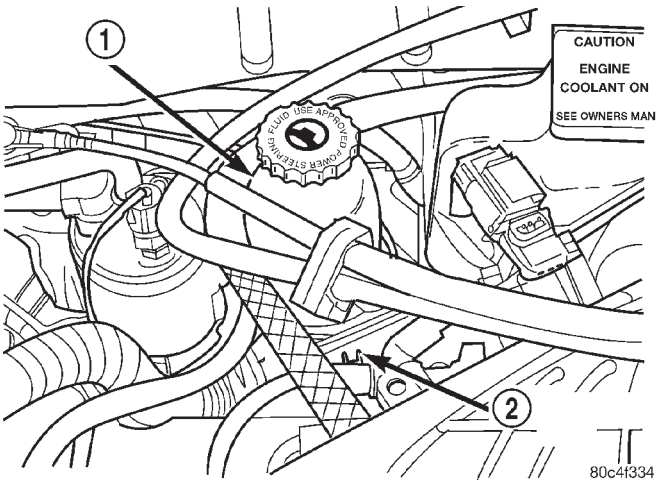

Fig. 67 Power Steering Fluid Reservoir

1 – POWER STEERING FLUID RESERVOIR
2 – RETAINING TAB

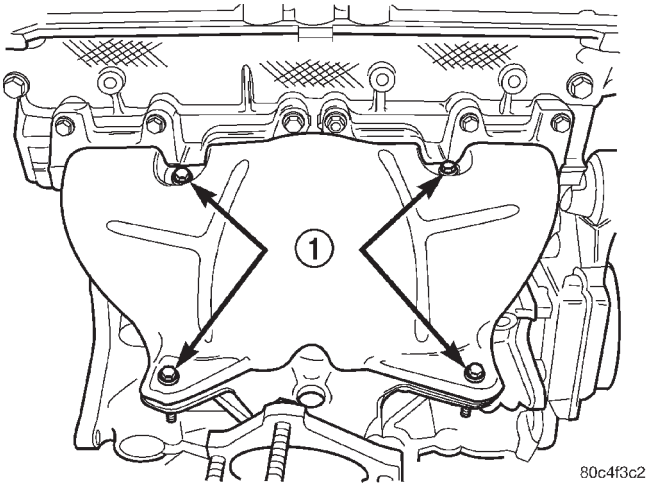

Fig. 68 Exhaust Manifold Heat Shield Bolts

1 – BOLTS

(16) Lower vehicle and remove the upper exhaust manifold retaining fasteners

(17) Remove exhaust manifold (Fig. 73) from above; between the engine and cowl panel.

(18) Remove and discard manifold gasket.

INSTALLATION

(1) Install a new exhaust manifold gasket. **DO NOT APPLY SEALER**.

(2) Position exhaust manifold in place. Tighten fasteners, starting at center and progressing outward in both directions to 23 N·m (200 in. lbs.). Raise and lower vehicle for fastener access as necessary. Repeat tightening procedure until all fasteners are at specified torque.

(3) Install exhaust manifold heat shields (Fig. 72). Tighten bolts to 12 N·m (105 in. lbs.) (Fig. 68).

REMOVAL AND INSTALLATION (Continued)

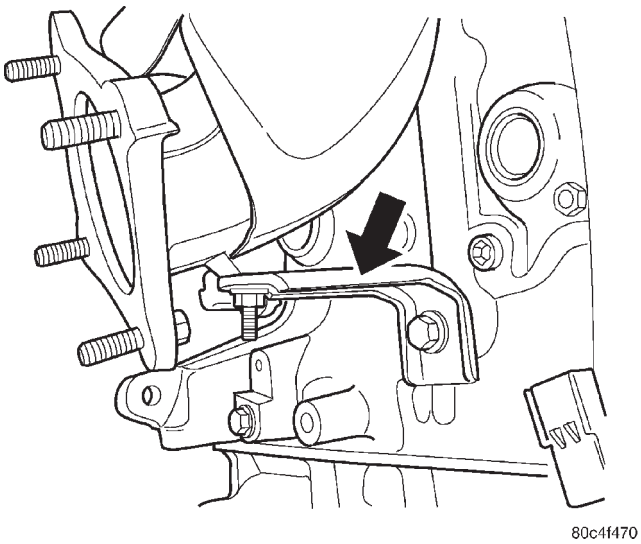

Fig. 69 Exhaust Manifold Support Bracket

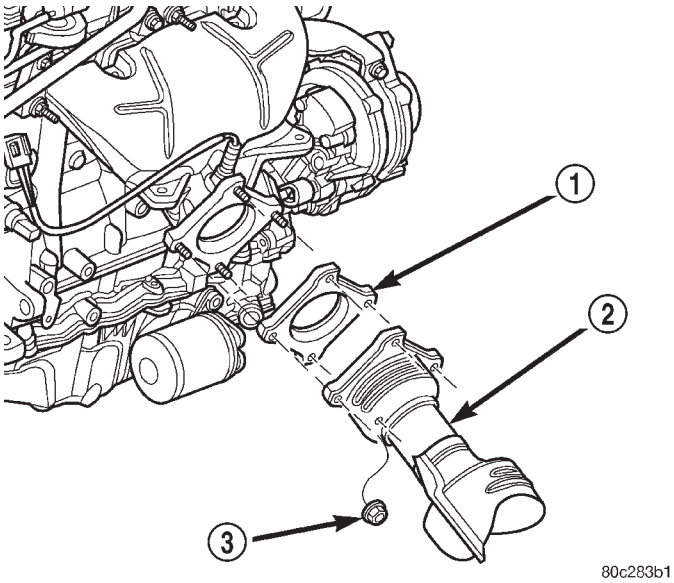

Fig. 70 Exhaust Manifold To Pipe Connection

1 – GASKET
2 – CATALYTIC CONVERTER
3 – NUT

(4) Install exhaust manifold support bracket (Fig. 69).

(5) Install engine wiring heat shield (Fig. 71).

(6) Connect oxygen sensor electrical connector.

(7) Install exhaust pipe to manifold (Fig. 70). Tighten fasteners to 28 N·m (250 in. lbs.).

(8) Install coolant recovery bottle. Refer to COOLING SYSTEM for procedure.

(9) Install power steering fluid reservoir to mounting bracket (Fig. 67).

(10) Connect MAP sensor electrical connector.

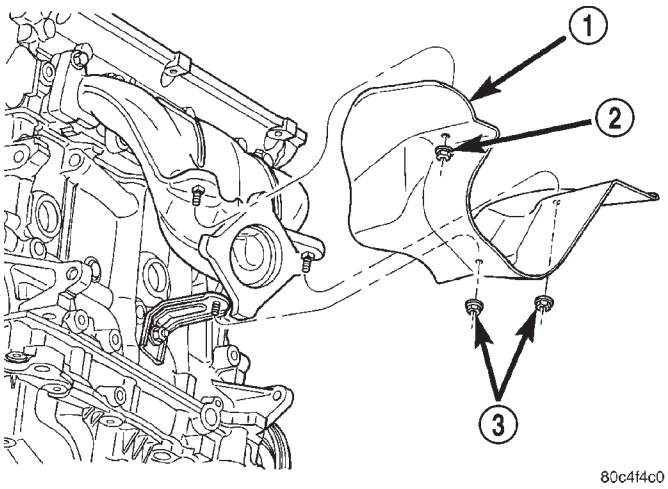

Fig. 71 Heat Shield—Engine Wiring

1 – HEAT SHIELD
2 – NUT
3 – NUT

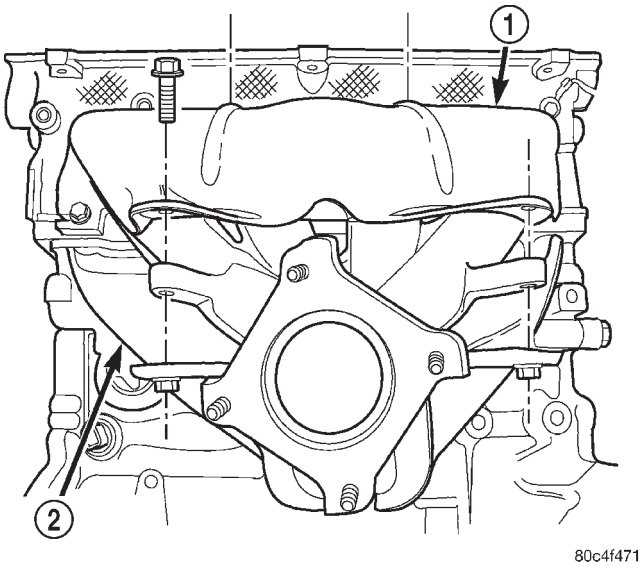

Fig. 72 Exhaust Manifold Heat Shields

1 – UPPER HEAT SHIELD
2 – LOWER HEAT SHIELD

(11) Connect throttle and speed control cables to the throttle lever and bracket. Refer to FUEL SYSTEM for procedure.

(12) Connect negative cable to battery.

(13) Install clean air hose and air cleaner housing.

CRANKSHAFT DAMPER

REMOVAL

(1) Remove accessory drive belts. Refer to COOLING SYSTEM for procedures.

(2) Remove crankshaft damper bolt.

REMOVAL AND INSTALLATION (Continued)

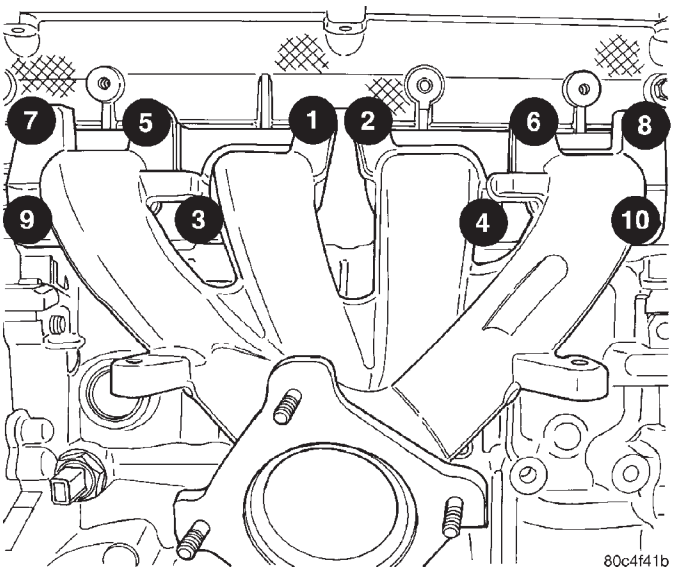

Fig. 73 Exhaust Manifold

(3) Remove damper by using Special Tool 1026 and Insert 6827–A (Fig. 74).

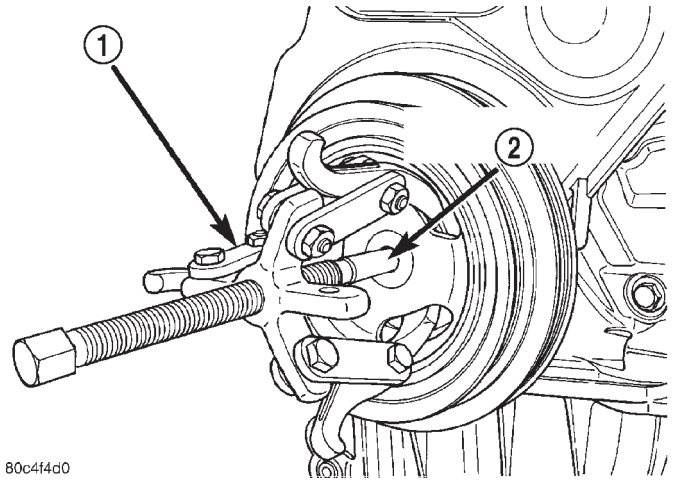

Fig. 74 Crankshaft Damper—Removal

1 – SPECIAL TOOL 1026
3-JAW PULLER
2 – SPECIAL TOOL 6827-A INSERT

INSTALLATION

(1) Install crankshaft damper using Special Tool 6792 (M12 1.75 x 150 mm bolt, washer, thrust bearing and nut).

NOTE: Lubricate the threads of the M12 1.75 x 150 mm bolt using Mopar® Nickel Anti-seize Compound or equivalent, before beginning to press the damper on.

(2) Install crankshaft damper bolt and tighten to 142 N·m (105 ft. lbs.) (Fig. 75).

(3) Install accessory drive belts. Refer to COOLING SYSTEM for procedures.

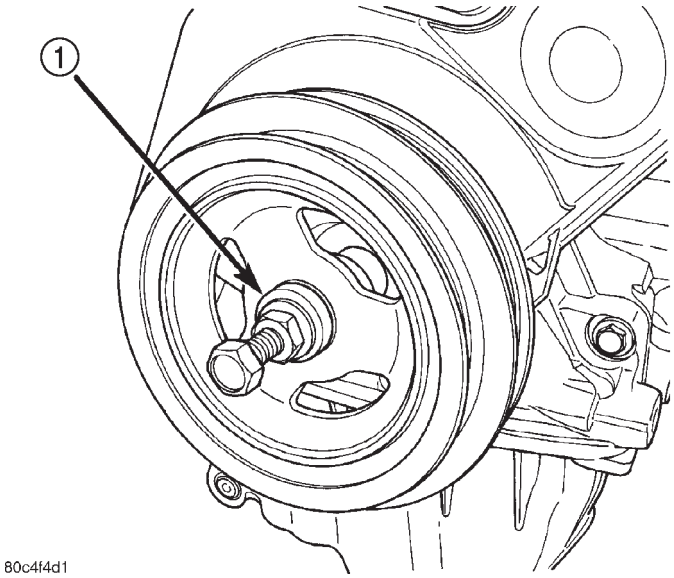

Fig. 75 Crankshaft Damper—Installation

1 – SPECIAL TOOL 6792

TIMING BELT COVER

FRONT COVER—UPPER

REMOVAL

(1) Remove upper torque strut attaching bolts and set strut aside. Refer to procedure in this section.

(2) Remove timing belt cover fasteners (Fig. 76) and remove cover.

INSTALLATION

(1) Install timing belt cover and tighten fasteners to 4.5 N·m (40 in. lbs.) (Fig. 76).

(2) Install upper torque strut bolts and perform adjustment procedure. Refer to procedure in this section.

FRONT COVER—LOWER

REMOVAL

(1) Disconnect negative battery cable.

(2) Raise vehicle on hoist. Remove right front wheel.

(3) Remove the right splash shield.

(4) Remove accessory drive belts. Refer to COOLING SYSTEM for procedure.

(5) Remove crankshaft damper. Refer to procedure in this section.

(6) Remove the lower torque strut.

(7) Disconnect exhaust system from manifold.

(8) Disconnect A/C pressure switch at rear of compressor housing.

(9) Lower vehicle and support engine with a jack.

REMOVAL AND INSTALLATION (Continued)

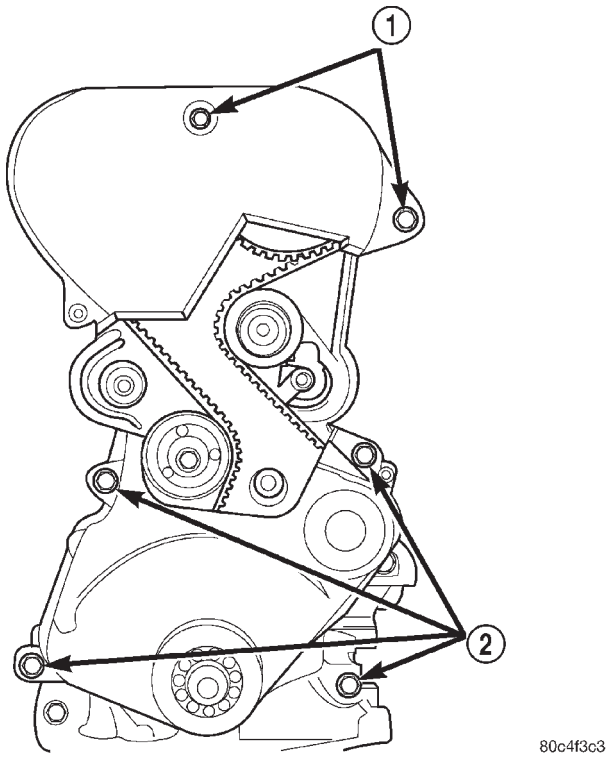

Fig. 76 Front Timing Belt Covers

1 – UPPER COVER FASTENERS
2 – LOWER COVER FASTENERS

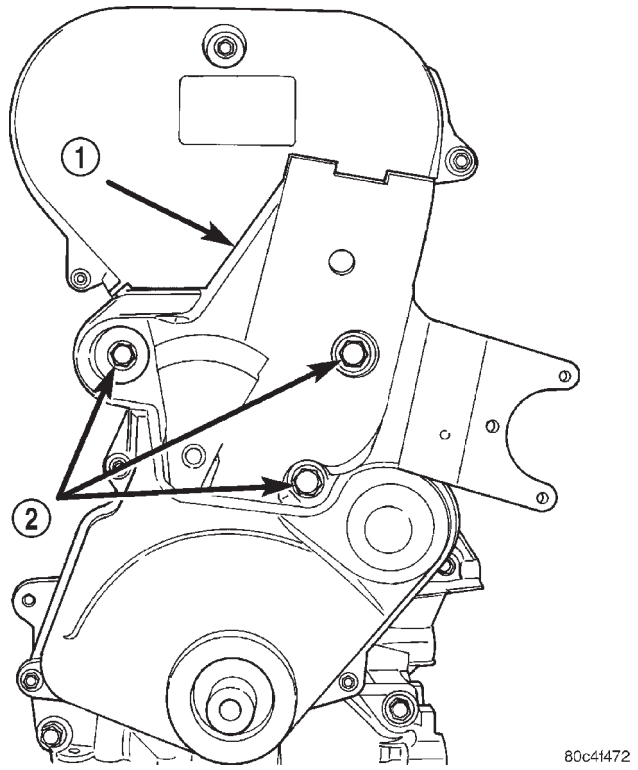

Fig. 77 Engine Support Bracket

1 – ENGINE SUPPORT BRACKET
2 – BOLTS

(10) Discharge A/C system and disconnect A/C lines at coupling block. Refer to HEATING AND AIR CONDITIONING for procedure.

(11) Remove upper torque strut.

(12) Remove screw attaching ground to strut bracket.

(13) Remove torque strut bracket from strut tower.

(14) Remove upper radiator support crossmember. Refer to BODY for procedure.

(15) Remove power steering pump and bracket. Set pump aside. Do not disconnect lines from pump.

(16) With engine properly supported, remove right engine mount through bolt.

(17) Raise engine with jack until engine support bracket bolts are accessible (Fig. 77).

(18) Remove engine support bracket (Fig. 77).

(19) Remove timing belt cover fasteners and remove cover (Fig. 76).

INSTALLATION

(1) Install lower timing belt cover and tighten fasteners to 4.5 N·m (40 in. lbs.) (Fig. 76).

(2) Install right engine support bracket (Fig. 77). Ensure the power steering pump is properly located in mounting location on bracket. Tighten mount bracket bolts to 61 N·m (45 ft. lbs.).

(3) Lower engine into mounting position and install right engine mount through bolt. Tighten bolt to 118 N·m (87 ft. lbs.).

(4) Install power steering pump and bracket.

(5) Install upper radiator support crossmember. Refer to BODY for procedure.

(6) Install torque strut bracket to strut tower.

(7) Connect ground strap to bracket.

(8) Install upper torque strut.

(9) Connect A/C lines and charge A/C system. Refer to HEATING AND AIR CONDITIONING for procedure.

(10) Raise vehicle.

(11) Connect exhaust system to manifold.

(12) Connect A/C pressure switch connector.

(13) Install crankshaft damper. Refer to procedure in this section.

(14) Install accessory drive belts. Refer to COOLING SYSTEM for procedure.

(15) Install lower torque strut.

(16) Perform torque strut adjustment procedure. Refer to procedure in this section.

(17) Install right splash shield.

(18) Install right front wheel.

(19) Connect negative cable to battery.

REMOVAL AND INSTALLATION (Continued)

REAR COVER

REMOVAL

(1) Remove timing belt. Refer to procedure in this section.
(2) Remove timing belt idler pulley.
(3) Remove camshaft sprockets (Fig. 79).
(4) Remove rear timing belt fasteners and remove cover from engine (Fig. 78).

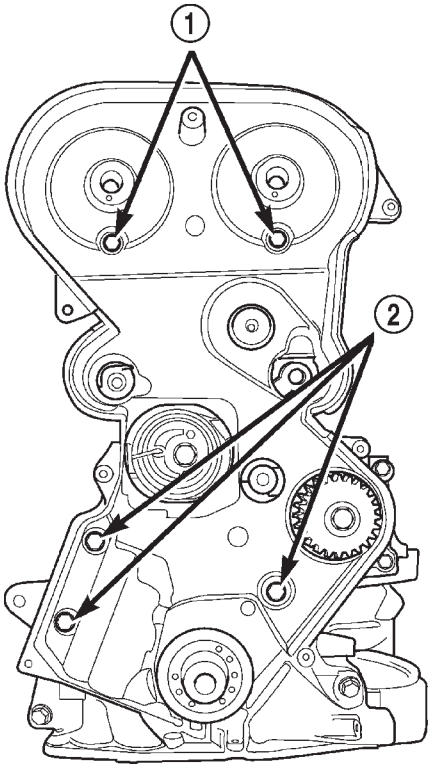

Fig. 78 Rear Timing Belt Cover Fasteners
1 – REAR COVER TO CYLINDER HEAD FASTENERS
2 – REAR COVER TO CYLINDER BLOCK FASTENERS

INSTALLATION

(1) Install rear timing belt cover and tighten fasteners to 4.5 N·m (40 in. lbs.) (Fig. 78).
(2) Install timing belt idler.

CAUTION: Do not use an impact wrench to tighten camshaft sprocket bolts. Damage to the camshaft-to-sprocket locating dowel pin may occur.

(3) Install camshaft sprockets. Hold sprockets with Special Tool 6847 while tightening center bolt to 101 N·m (75 ft. lbs.) (Fig. 79).
(4) Install timing belt. Refer to procedure in this section.

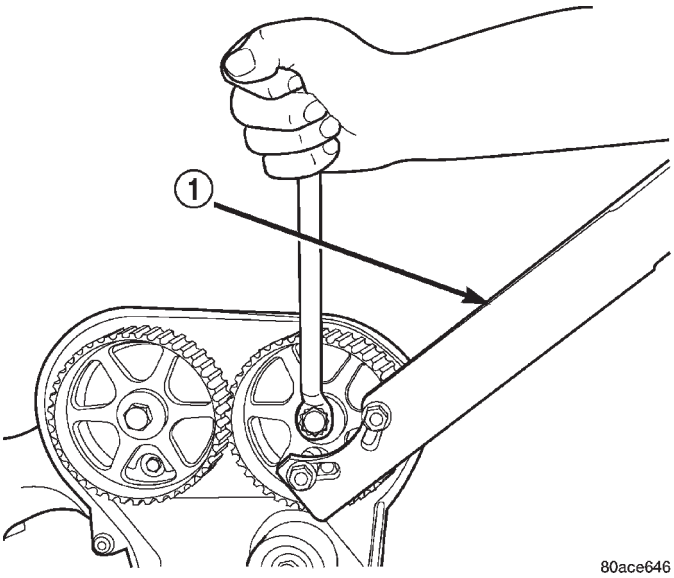

Fig. 79 Camshaft Sprocket—Removal/Installation
1 – SPECIAL TOOL 6847

TIMING BELT

REMOVAL

(1) Disconnect negative battery cable.
(2) Raise vehicle on hoist. Remove right front wheel.
(3) Remove the right splash shield.
(4) Remove accessory drive belts. Refer to COOLING SYSTEM for procedure.
(5) Remove crankshaft damper. Refer to procedure in this section.
(6) Remove the lower torque strut.
(7) Disconnect exhaust system from manifold.
(8) Disconnect A/C pressure switch at rear of compressor housing.
(9) Lower vehicle and support engine with a jack.
(10) Discharge A/C system and disconnect A/C lines at coupling block. Refer to HEATING AND AIR CONDITIONING for procedure.
(11) Remove upper torque strut.
(12) Remove screw attaching ground to strut bracket.
(13) Remove torque strut bracket.
(14) Remove upper radiator support crossmember. Refer to BODY for procedure.
(15) Remove power steering pump and bracket. Set pump aside. Do not disconnect lines from pump.
(16) With engine properly supported, remove right engine mount through bolt.
(17) Raise engine with jack until engine support bracket bolts are accessible.
(18) Remove support bracket bolts (Fig. 81).
(19) Remove support bracket (Fig. 81).

REMOVAL AND INSTALLATION (Continued)

(20) Remove upper timing belt cover fasteners and remove cover (Fig. 80).

(21) Remove lower timing belt cover fasteners and remove cover (Fig. 80).

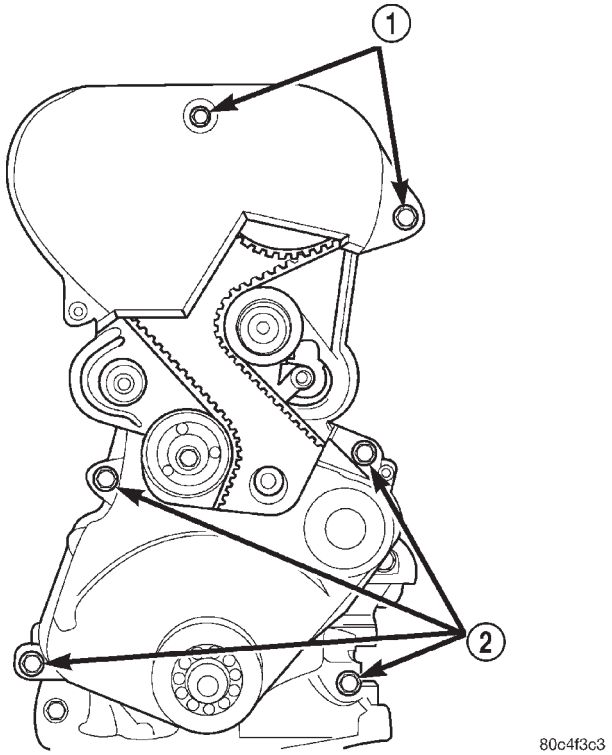

Fig. 80 Timing Belt Covers

1 – UPPER COVER FASTENERS
2 – LOWER COVER FASTENERS

CAUTION: When aligning crankshaft and camshaft timing marks always rotate engine from crankshaft. Camshaft should not be rotated after timing belt is removed. Damage to valve components may occur. Always align timing marks before removing timing belt.

(22) Before the removal of the timing belt, rotate crankshaft until the TDC mark on oil pump housing aligns with the TDC mark on crankshaft sprocket (trailing edge of sprocket tooth) (Fig. 82).

NOTE: The crankshaft sprocket TDC mark is located on the trailing edge of the sprocket tooth. Failure to align trailing edge of sprocket tooth to TDC mark on oil pump housing will cause the camshaft timing marks to be misaligned.

(23) Install 6 mm Allen wrench into belt tensioner. Before rotating the tensioner, insert the long end of a 1/8” or 3 mm Allen wrench into the pin hole on the front of the tensioner (Fig. 83). While rotating the tensioner counterclockwise, push in lightly on the 1/8” or 3 mm Allen wrench, until it slides into the locking hole.

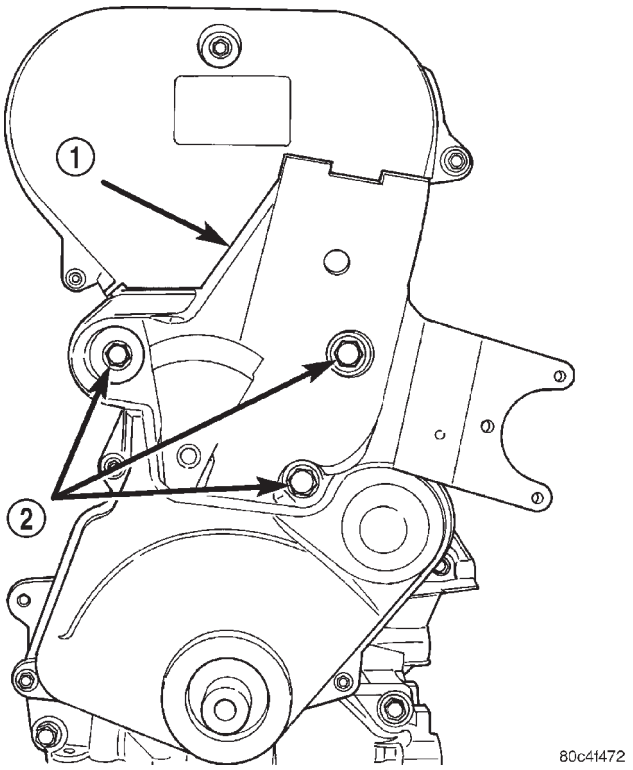

Fig. 81 Engine Support Bracket

1 – ENGINE SUPPORT BRACKET
2 – BOLTS

(24) Remove timing belt.

CAUTION: If timing belt was damaged due to incorrect tracking (alignment), the belt tensioner assembly must be replaced. Refer to Timing Belt Tensioner Assembly Removal and Installation procedure in this section.

INSTALLATION

(1) Set crankshaft sprocket to TDC by aligning the sprocket with the arrow on the oil pump housing.

(2) Set camshafts timing marks so that the exhaust camshaft sprocket is a 1/2 notch below the intake camshaft sprocket (Fig. 84).

CAUTION: Ensure that the arrows on both camshaft sprockets are facing up.

(3) Install timing belt. Starting at the crankshaft, go around the water pump sprocket, idler pulley, camshaft sprockets and then around the tensioner (Fig. 85).

(4) Move the exhaust camshaft sprocket counterclockwise (Fig. 85) to align marks and take up belt slack.

NOTE: A new tensioner is held in the wound position by a pull pin.

REMOVAL AND INSTALLATION (Continued)

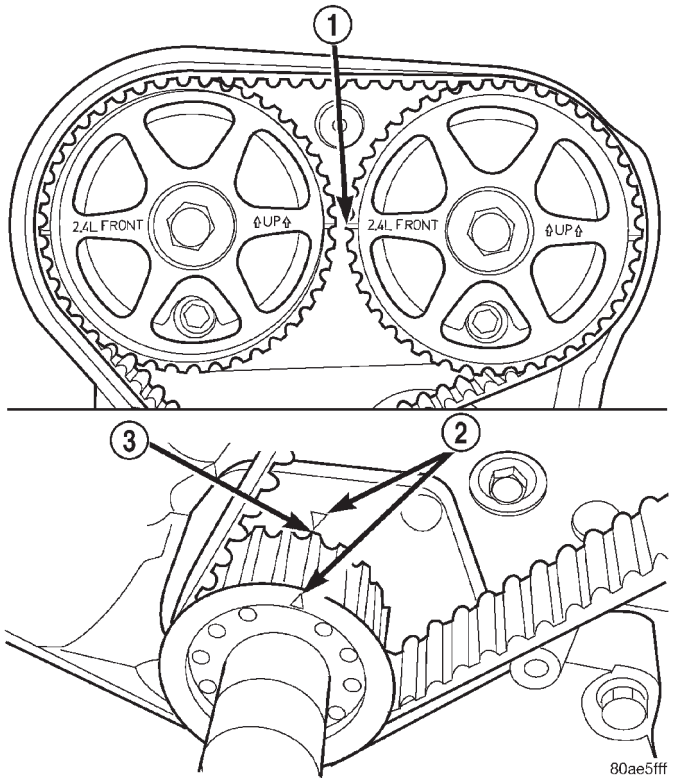

Fig. 82 Crankshaft and Camshaft Timing

1 – CAMSHAFT TIMING MARKS
2 – CRANKSHAFT TDC MARKS
3 – TRAILING EDGE OF SPROCKET TOOTH

(5) Remove the pull pin or Allen wrench from the belt tensioner.

(6) Once the timing belt has been installed and tensioner released, rotate the crankshaft two (2) complete revolutions. Verify that the TDC marks on crankshaft and timing marks on the camshafts are aligned as shown in (Fig. 86).

(7) Install lower timing belt cover and tighten fasteners to 4.5 N·m (40 in. lbs.) (Fig. 80).

(8) Install upper timing belt cover and tighten fasteners to 4.5 N·m (40 in. lbs.) (Fig. 80).

(9) Install right engine support bracket. Ensure the power steering pump is properly located in mounting location on bracket. Tighten mount bracket bolts to 61 N·m (45 ft. lbs.) (Fig. 81).

(10) Lower engine into mounting position and install right engine mount through bolt. Tighten bolt to 118 N·m (87 ft. lbs.).

(11) Install power steering pump and bracket.

(12) Install upper radiator support crossmember. Refer to BODY for procedure.

(13) Install torque strut bracket to strut tower.

(14) Connect ground strap to bracket.

(15) Install upper torque strut.

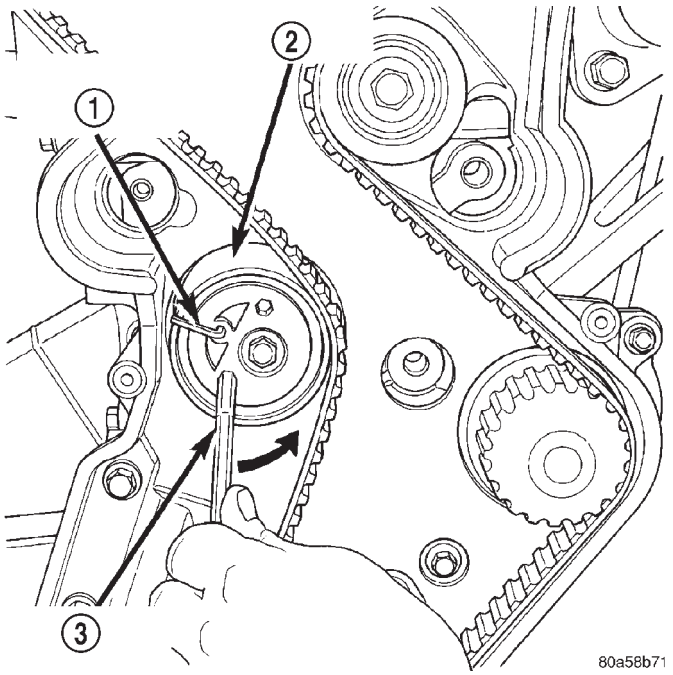

Fig. 83 Locking Timing Belt Tensioner

1 – 1/8 OR 3mm ALLEN WRENCH
2 – BELT TENSIONER
3 – 6mm ALLEN WRENCH

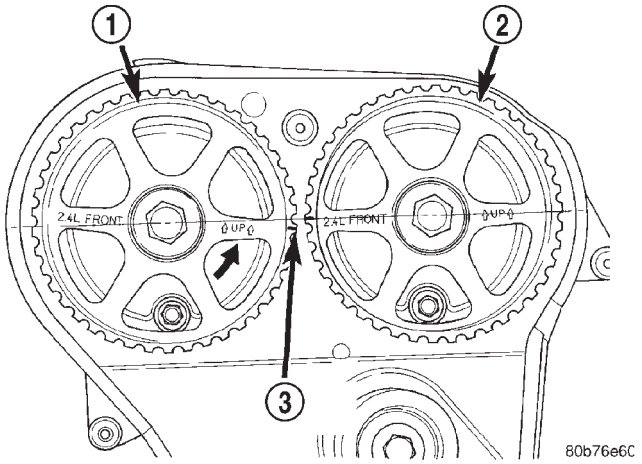

Fig. 84 Camshaft Sprocket Alignment For Timing Belt Installation

1 – CAMSHAFT SPROCKET-EXHAUST
2 – CAMSHAFT SPROCKET-INTAKE
3 – 1/2 NOTCH LOCATION

(16) Connect A/C lines and charge A/C system. Refer to HEATING AND AIR CONDITIONING for procedure.

(17) Raise vehicle.

(18) Connect exhaust system to manifold.

(19) Connect A/C pressure switch connector.

(20) Install crankshaft damper. Refer to procedure in this section.

REMOVAL AND INSTALLATION (Continued)

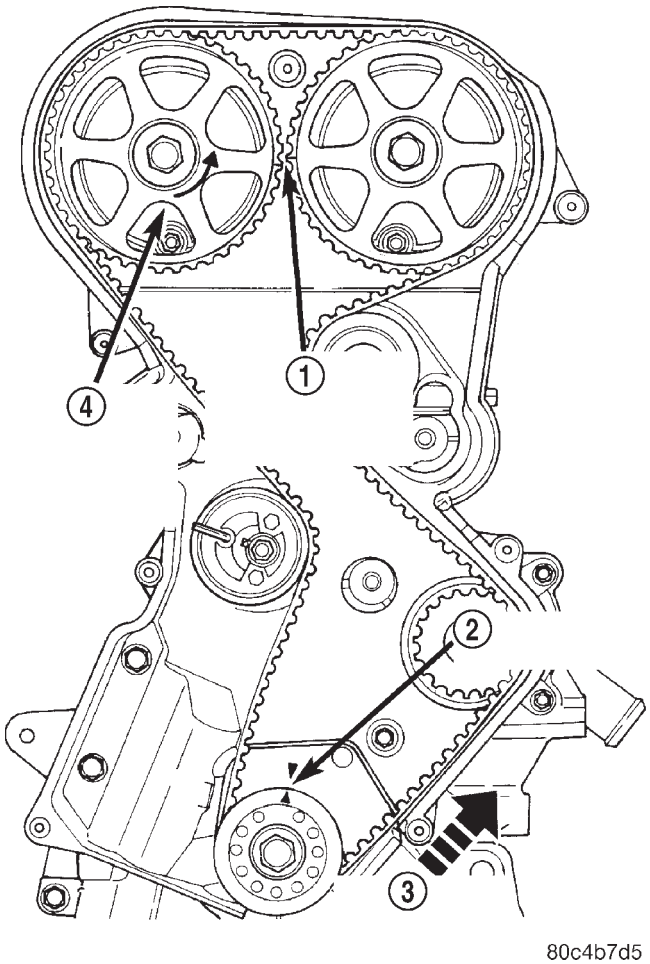

Fig. 85 Timing Belt—Installation

1 – CAMSHAFT TIMING MARKS 1/2 NOTCH LOCATION
2 – CRANKSHAFT AT TDC
3 – INSTALL BELT IN THIS DIRECTION
4 – ROTATE CAMSHAFT SPROCKET TO TAKE UP BELT SLACK

(21) Install accessory drive belts. Refer to COOLING SYSTEM for procedure.

(22) Install lower torque strut.

(23) Perform torque strut adjustment procedure. Refer to procedure in this section.

(24) Install right splash shield.

(25) Install right front wheel.

(26) Connect negative cable to battery.

(27) Perform camshaft/crankshaft synchronization procedure. Refer to procedure in this section.

TIMING BELT TENSIONER ASSEMBLY

REMOVAL

(1) Remove timing belt. Refer to procedure in this section.

(2) Remove timing belt idler pulley.

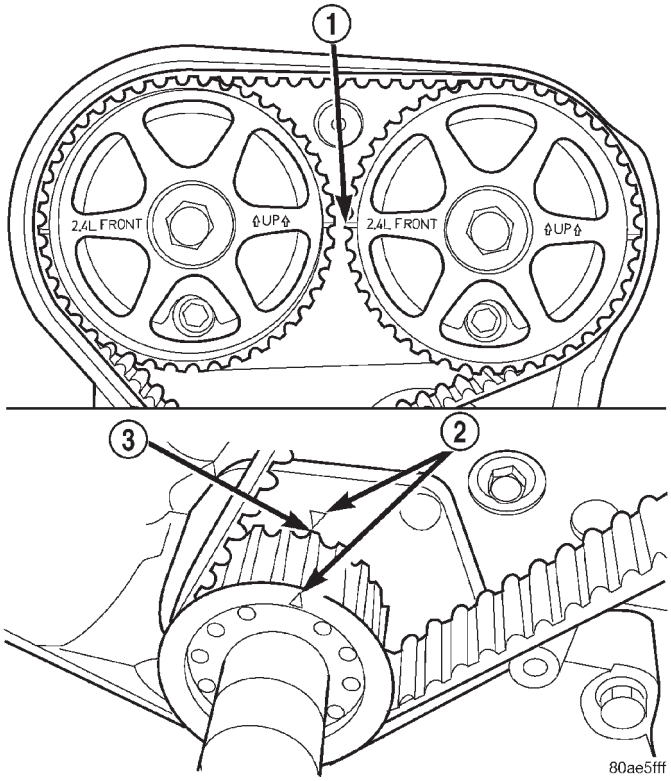

Fig. 86 Crankshaft and Camshaft Timing

1 – CAMSHAFT TIMING MARKS
2 – CRANKSHAFT TDC MARKS
3 – TRAILING EDGE OF SPROCKET TOOTH

(3) Hold camshaft sprocket with Special Tool 6847 while removing bolt (Fig. 87). Remove both camshaft sprockets.

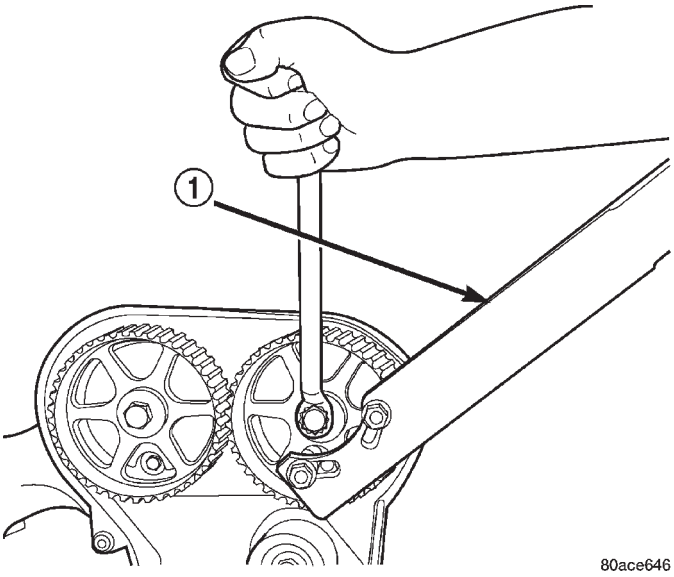

Fig. 87 Camshaft Sprockets

1 – SPECIAL TOOL 6847

REMOVAL AND INSTALLATION (Continued)

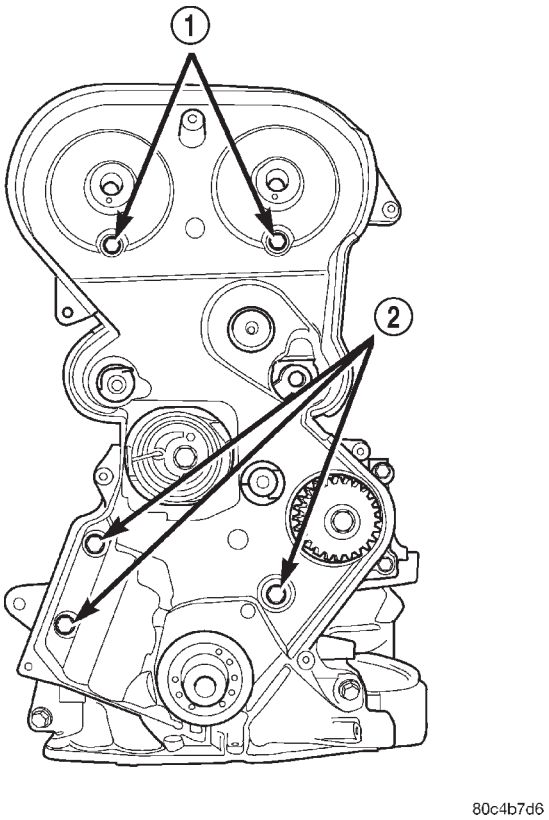

Fig. 88 Rear Timing Belt Cover Fasteners

1 – REAR COVER TO CYLINDER HEAD FASTENERS
2 – REAR COVER TO CYLINDER BLOCK FASTENERS

(4) Remove rear timing belt cover fasteners and remove cover from engine (Fig. 88).

(5) Remove lower bolt attaching timing belt tensioner assembly to engine and remove tensioner **as an assembly** (Fig. 89).

INSTALLATION

(1) Align timing belt tensioner assembly to engine and install lower mounting bolt **but do not tighten** (Fig. 89). To properly align tensioner assembly; install one of the engine bracket mounting bolts (M10) 5–7 turns into the tensioner assembly upper mounting location (Fig. 89).

(2) Torque the tensioner's lower mounting bolt to 61 N·m (45 ft. lbs.). Remove the upper bolt used for tensioner alignment.

(3) Install rear timing belt cover and fasteners.

(4) Install timing belt idler pulley and torque mounting bolt to 61 N·m (45 ft. lbs.).

CAUTION: Do not use an impact wrench to tighten camshaft sprocket bolts. Damage to the camshaft-to-sprocket locating dowel pin may occur.

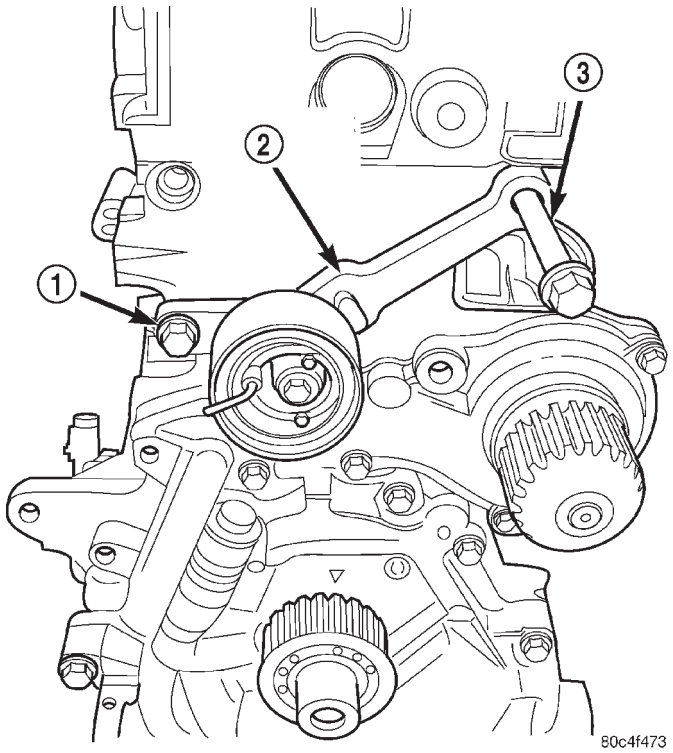

Fig. 89 Timing Belt Tensioner Assembly

1 – BOLT
2 – TENSIONER ASSEMBLY
3 – BOLT-INSTALL FOR PROPER ALIGNMENT

(5) Install camshaft sprockets. Use Special Tool 6847 to hold sprockets (Fig. 87) and tighten bolts to 101 N·m (75 ft. lbs.).

(6) Install timing belt. Refer to procedure in this section.

CYLINDER HEAD COVER

REMOVAL

(1) Remove upper intake manifold. Refer to procedure in this section.

(2) Remove ignition coil and spark plug wires.

(3) Disconnect PCV and make-up air hoses from cylinder head cover (Fig. 90).

(4) Remove cylinder head cover bolts.

CAUTION: When removing cylinder head cover bolts, be careful not to interchange the two (2) center bolts with the seven (7) perimeter bolts. The two (2) center bolts contain an aluminum washer between the bolt head and torque limiter for sealing purposes.

(5) Remove cylinder head cover from cylinder head.

REMOVAL AND INSTALLATION (Continued)

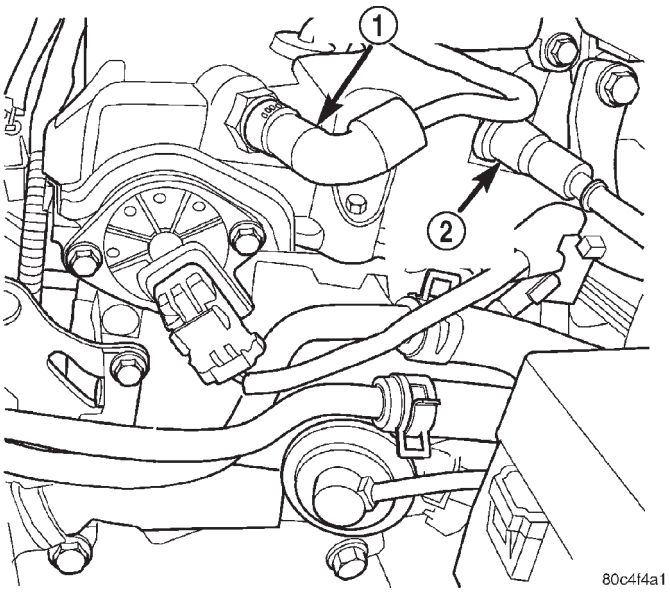

Fig. 90 PCV and Make-up Air Hoses

1 – PCV HOSE
2 – MAKE-UP AIR HOSE

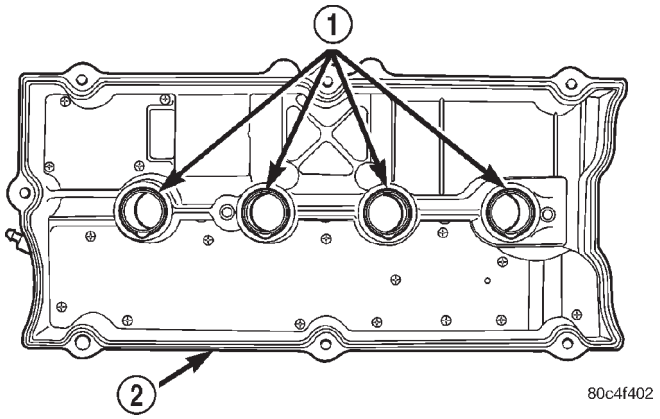

Fig. 91 Cylinder Head Cover Gasket and Spark Plug Well Seals

1 – SPARK PLUG WELL SEALS
2 – GASKET

INSTALLATION

NOTE: Replace spark plug well seals and bolt seals when installing a new cylinder head cover gasket.

(1) Install new cylinder head cover gaskets (Fig. 91) and spark plug well seals (Fig. 92).

(2) Replace cylinder head cover bolt seals (Fig. 93).

CAUTION: Do not allow oil or solvents to contact the timing belt as they can deteriorate the rubber and cause tooth skipping.

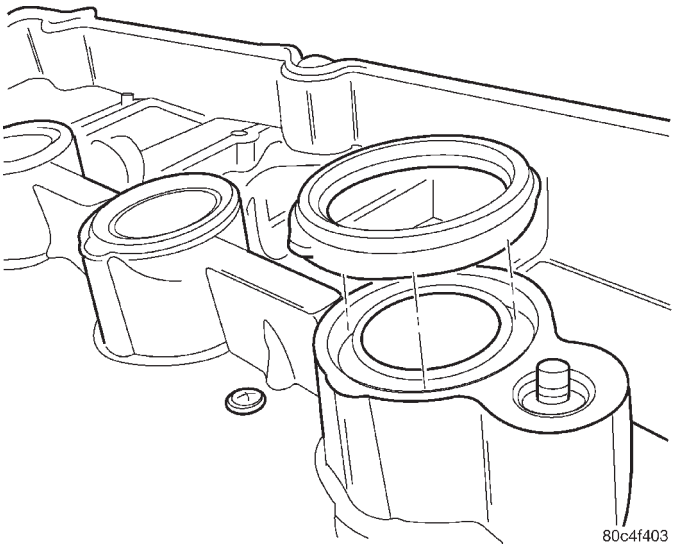

Fig. 92 Spark Plug Well Seals

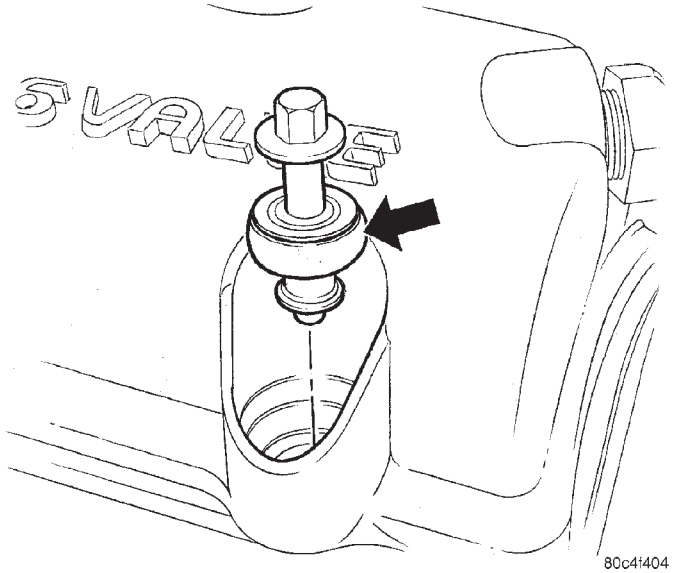

Fig. 93 Cylinder Head Cover Bolt Seals

(3) Apply Mopar® Engine RTV GEN II at the camshaft cap corners and at the top edges of the 1/2 round seal (Fig. 94).

CAUTION: When installing cylinder head cover bolts, be careful not to interchange the two (2) center bolts with the seven (7) perimeter bolts. The two (2) center bolts contain an aluminum washer between the bolt head and torque limiter for sealing purposes.

(4) Install cylinder head cover assembly to cylinder head. Install all bolts, ensuring the two (2) bolts containing the sealing washer are located in the center locations of cover. Tighten bolts in sequence shown in (Fig. 95). Using a 3 step torque method as follows:

(a) Tighten all bolts to 4.5 N·m (40 in. lbs.).
(b) Tighten all bolts to 9.0 N·m (80 in. lbs.).

REMOVAL AND INSTALLATION (Continued)

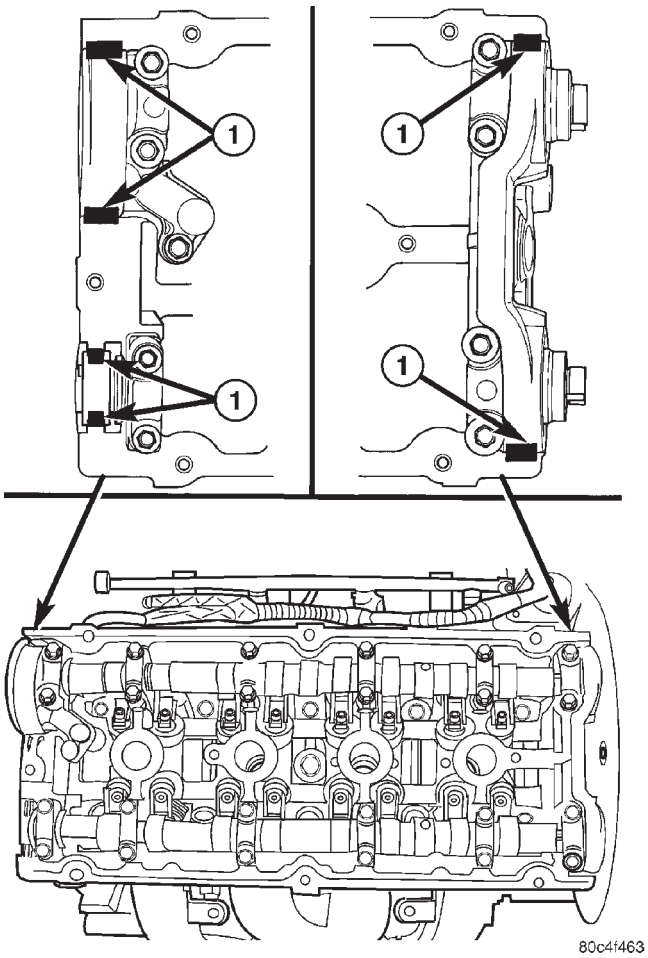

Fig. 94 Sealer Locations

1 – SEALER LOCATION

(c) Tighten all bolts to 12 N·m (105 in. lbs.).

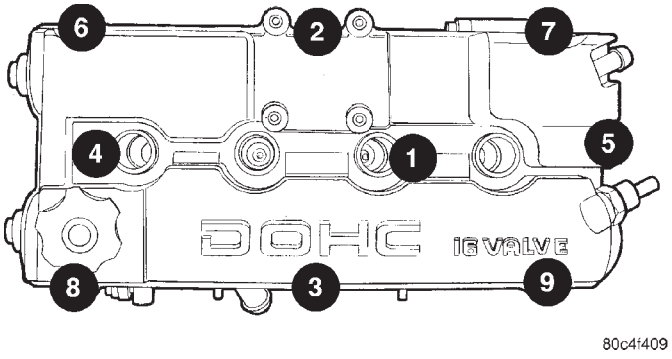

Fig. 95 Cylinder Head Cover Tightening Sequence

(5) Install ignition coil and spark plug wires. Tighten fasteners to 12 N·m (105 in. lbs.).

(6) If the PCV valve was removed, apply Mopar® Thread Sealant with Teflon to threads and install valve to cylinder head cover. Tighten PCV valve to 8 N·m (70 in. lbs.).

(7) Connect PCV and make-up air hoses to cylinder head cover (Fig. 90).

(8) Install upper intake manifold. Refer to procedure in this section.

CAMSHAFT

REMOVAL

(1) Remove cylinder head cover. Refer to procedure in this section.

(2) Remove camshaft position sensor and camshaft target magnet. Refer to IGNITION SYSTEM for procedure.

(3) Remove timing belt, camshaft sprockets and rear timing belt cover. Refer to procedures in this section.

(4) Bearing caps are identified for location. Remove the outside bearing caps first (Fig. 96).

(5) Loosen the camshaft bearing cap attaching fasteners in sequence shown (Fig. 97), one camshaft at a time.

CAUTION: Camshafts are not interchangeable. The left (intake) camshaft thrust bearing face (No. 6) spacing is wider.

(6) Identify the camshafts before removing from the head. The camshafts are not interchangeable.

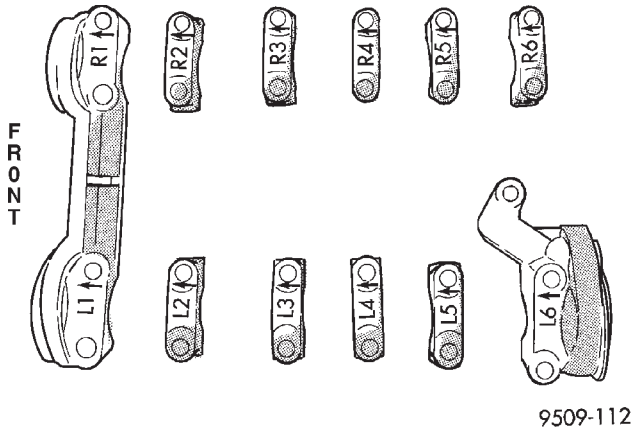

Fig. 96 Camshaft Bearing Cap Identification

CAMSHAFT END PLAY

(1) Oil camshaft journals and install camshaft **WITHOUT** cam follower assemblies. Install rear cam caps and tighten screws to specified torque.

(2) Using a suitable tool, move camshaft as far rearward as it will go.

(3) Zero dial indicator (Fig. 98).

(4) Move camshaft as far forward as it will go.

(5) End play travel: 0.05–0.15 mm (0.002–0.010 in.).

(5) If end play is excessive, check cylinder head and camshaft for wear; replace as necessary.

REMOVAL AND INSTALLATION (Continued)

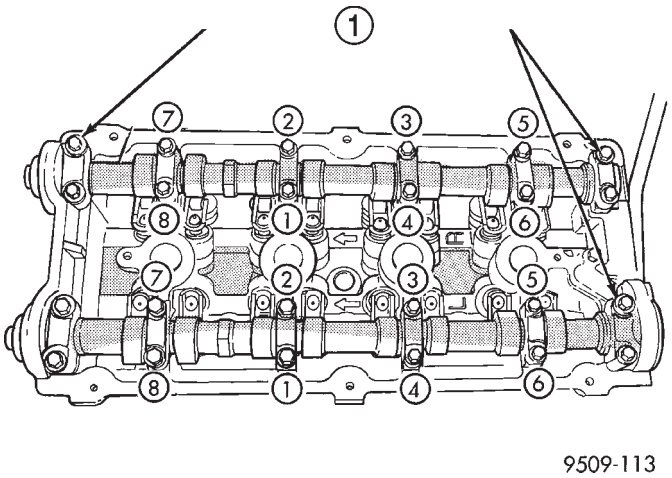

Fig. 97 Camshaft Bearing Cap—Removal

1 – REMOVE OUTSIDE BEARING CAPS FIRST

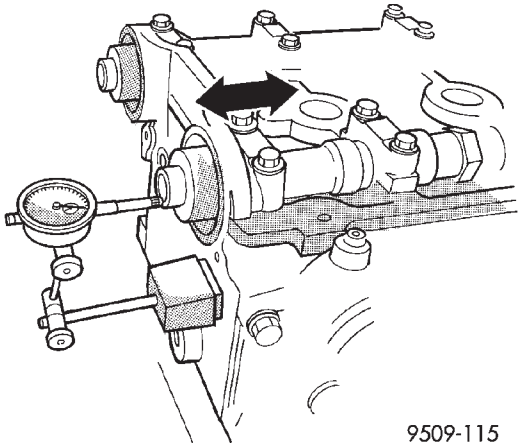

Fig. 98 Camshaft End Play

INSTALLATION

CAUTION: Ensure that NONE of the pistons are at top dead center when installing the camshafts.

(1) Lubricate all camshaft bearing journals, cam followers, and camshafts.

(2) Install cam followers and camshafts.

(3) Install right and left camshaft bearing caps No. 2–5 and right No. 6. Tighten the M6 fasteners to 12 N·m (105 in. lbs.) in sequence shown in (Fig. 99).

(4) Apply Mopar® Gasket Maker to No. 1 and left No. 6 bearing caps as shown in (Fig. 100). Install the bearing caps and tighten the M8 fasteners to 24 N·m (215 in. lbs.).

NOTE: Camshaft bearing end caps must be installed before the camshaft seals are installed.

(5) Install camshaft seals, rear timing belt cover, camshaft sprockets, and timing belt. Refer to procedures in this section.

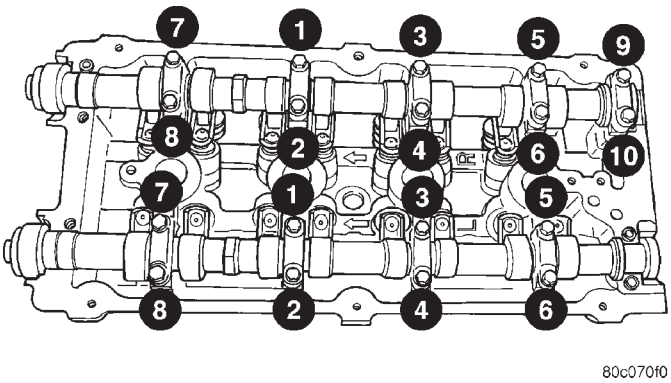

Fig. 99 Camshaft Bearing Cap Tightening Sequence

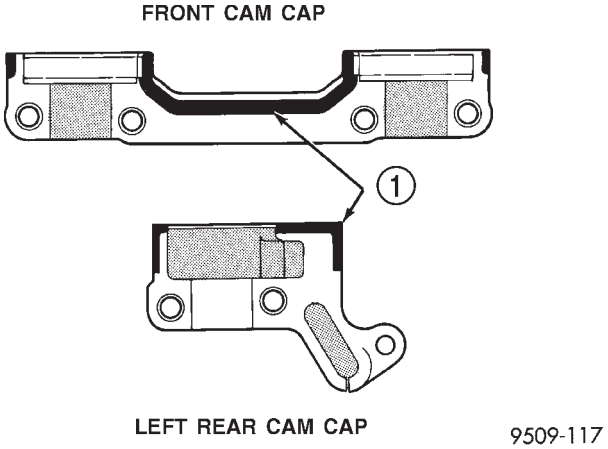

Fig. 100 Camshaft Bearing Cap Sealing

1 – 1.5 mm (.060 in.) DIAMETER BEAD OF MOPAR GASKET MAKER

(6) Install camshaft target magnet and camshaft position sensor. Refer to IGNITION SYSTEM for procedure.

(7) Install cylinder head cover. Refer to procedure in this section.

(8) Perform camshaft/crankshaft synchronization procedure. Refer to procedure in this section.

CAMSHAFT OIL SEAL—FRONT

REMOVAL

(1) Remove timing belt. Refer to procedure in this section.

(2) Hold camshaft sprocket with Special Tool 6847 and remove center bolt (Fig. 101).

(3) Remove rear timing belt cover. Refer to procedure in this section.

(4) Remove camshaft seal using Special Tool C-4679-A (Fig. 102).

CAUTION: Do not nick shaft seal surface or seal bore

REMOVAL AND INSTALLATION (Continued)

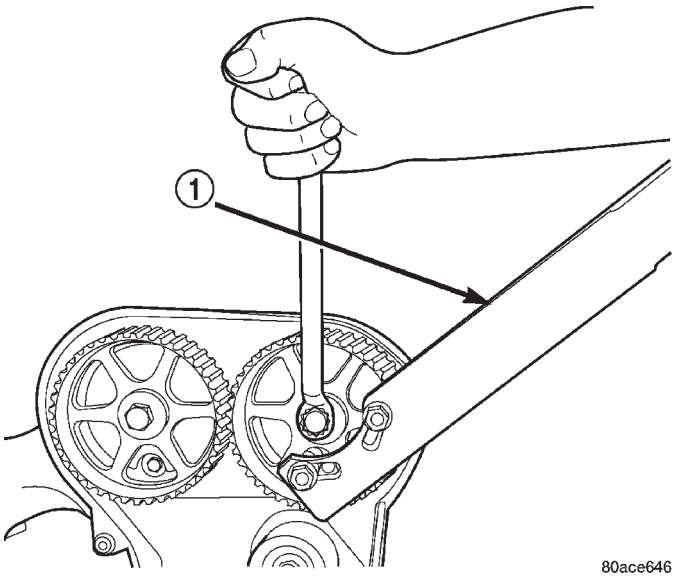

Fig. 101 Camshaft Sprocket—Removal/Installation
1 – SPECIAL TOOL 6847

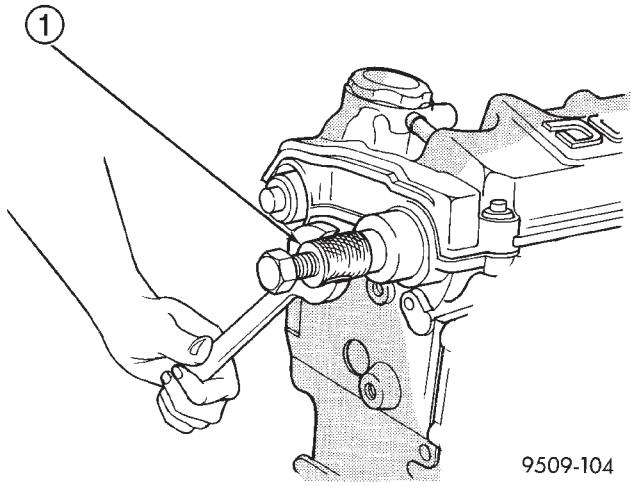

Fig. 102 Camshaft Oil Seal Removal—Typical
1 – SPECIAL TOOL C-4679

INSTALLATION

(1) Clean sealing surfaces. Seal surface must be free of varnish, dirt or nicks. Polish with 400 grit paper if necessary.

(2) Install camshaft seals into cylinder head using Special Tool MD-998306 until flush with head (Fig. 103).

(3) Install rear timing belt cover. Refer to procedure in this section.

CAUTION: Do not use an impact wrench to tighten camshaft sprocket bolts. Damage to camshaft to sprocket locating dowel pin may occur.

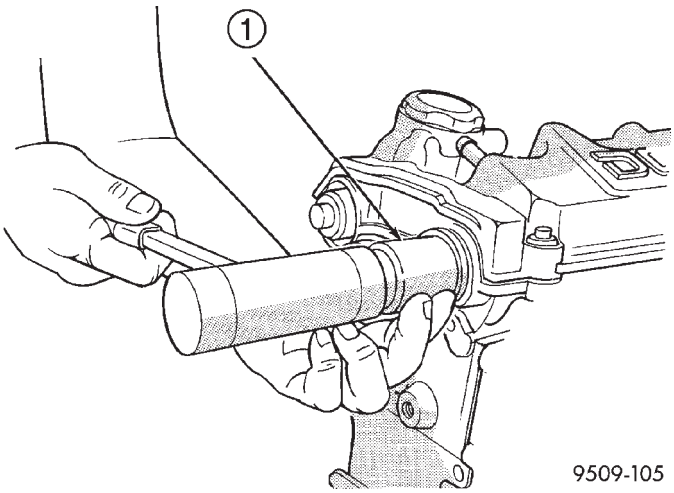

Fig. 103 Camshaft Seal Installation—Typical
1 – SPECIAL TOOL MD 998306

(4) Install camshaft sprockets. Hold sprockets with Special Tool 6847. Tighten the center bolt to 101 N·m (75 ft. lbs.) (Fig. 101).

(5) Install timing belt. Refer to procedures in this section.

CAMSHAFT FOLLOWER

REMOVAL

NOTE: This procedure is for in-vehicle service with camshafts installed.

(1) Remove cylinder head cover. Refer to procedure in this section.

(2) Remove fuel rail. Refer to FUEL SYSTEM for procedure.

(3) Remove spark plugs.

(4) Rotate engine until the camshaft lobe, on the follower being removed, is position on its base circle (heel). Also, the piston should be a minimum of 6.3 mm (0.25 in) below TDC position.

CAUTION: If cam follower assemblies are to be reused, always mark position for reassembly in their original positions.

(5) Using Special Tools 8215 and 8436 slowly depress valve assembly until cam follower can be removed (Fig. 104).

NOTE: It may be necessary to remove additional brackets or components to allow clearance for tool handle movement.

(6) Repeat removal procedure for each cam follower.

REMOVAL AND INSTALLATION (Continued)

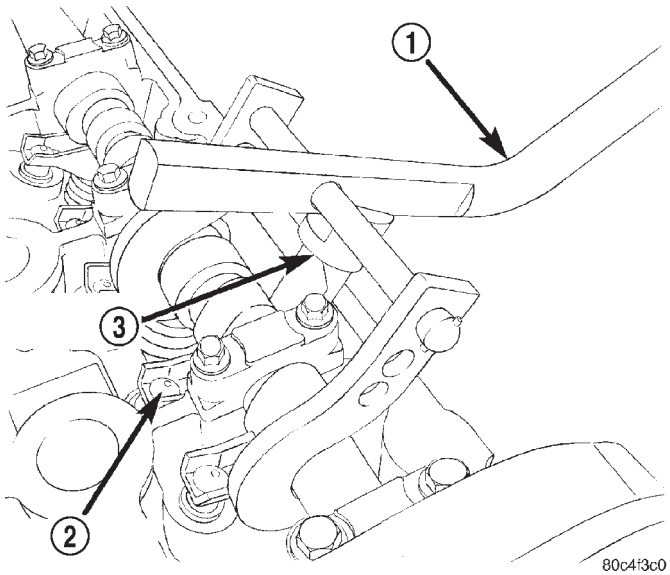

Fig. 104 Camshaft Follower—Removal/Installation

1 – SPECIAL TOOL 8215
2 – CAMSHAFT FOLLOWER
3 – SPECIAL TOOL 8436

INSTALLATION

(1) Lubricate cam follower with clean engine oil.

(2) Using Special Tools 8215 and 8436 slowly depress valve assembly until cam follower can be installed on the hydraulic adjuster and valve stem (Fig. 104).

(3) Repeat installation procedure for each cam follower.

(4) Install spark plugs. Refer to IGNITION SYSTEM for procedure.

(5) Install fuel rail. Refer to FUEL SYSTEM for procedure.

(6) Install cylinder head cover. Refer to procedure in this section.

HYDRAULIC LASH ADJUSTER

REMOVAL

NOTE: This procedure is for in-vehicle service with camshafts installed.

(1) Remove cylinder head cover. Refer to procedure in this section.

(2) Remove cam follower. Refer to procedure in this section.

(3) Remove lash adjuster (Fig. 105).

(4) Repeat removal procedure for each lash adjuster.

(5) If reusing, mark each hydraulic lash adjuster for reassembly in original position. Lash adjusters are serviced as an assembly.

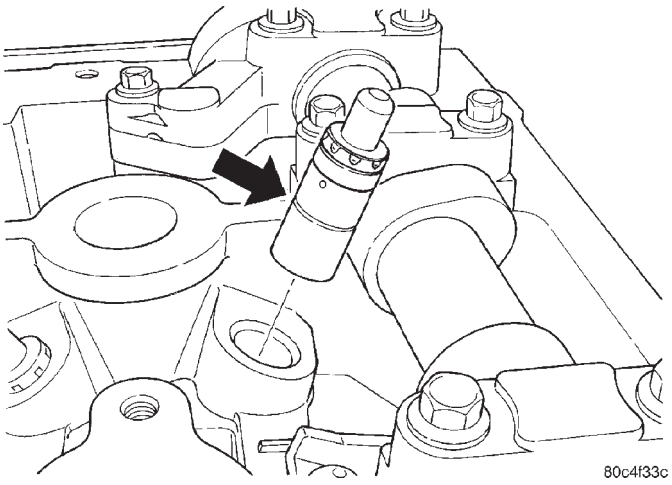

Fig. 105 Hydraulic Lash Adjuster

INSTALLATION

(1) Install hydraulic lash adjuster (Fig. 105). Ensure the adjusters are at least partially full of engine oil. This is indicated by little or no plunger travel when the lash adjuster is depressed.

(2) Install cam follower.

(3) Repeat installation procedure for each lash adjuster.

(4) Install cylinder head cover.

VALVE SPRINGS AND VALVE SEALS IN VEHICLE

REMOVAL

(1) Remove camshafts. Refer to procedure in this section.

(2) Rotate crankshaft until piston is at TDC on compression.

(3) With air hose attached to adapter tool installed in spark plug hole, apply 90-120 psi air pressure.

(4) Using Special Tool MD-998772-A with adapter 6779 (Fig. 106), compress valve springs and remove valve locks.

(5) Remove valve spring(s).

(6) Remove valve stem seal(s) by a using valve stem seal tool.

INSTALLATION

(1) Install valve seal/valve spring seat assembly (Fig. 107). Push the assembly down to seat it onto the valve guide.

(2) Install valve spring and retainer, use Special Tool MD-998772-A with adapter 6779 to compress valve springs only enough to install locks (Fig. 106). Correct alignment of tool is necessary to avoid nicking valve stems.

(3) Remove air hose and install spark plugs.

(4) Install camshafts and cylinder head cover. Refer to procedures in this section.

REMOVAL AND INSTALLATION (Continued)

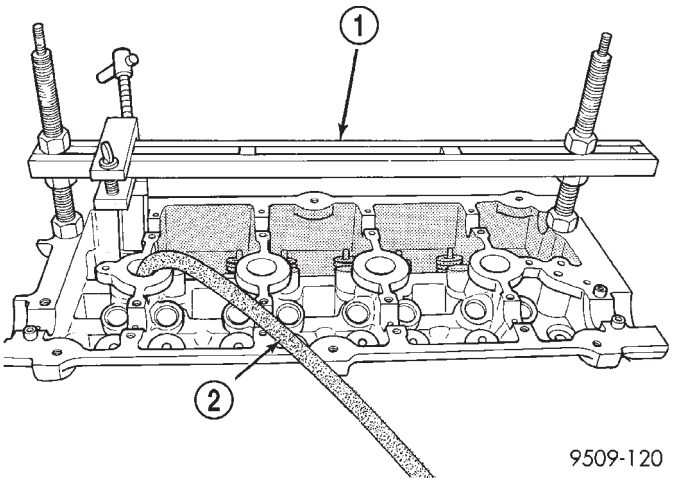

Fig. 106 Valve Spring—Removal/Installation

1 – VALVE SPRING COMPRESSOR MD 998772A
2 – AIR HOSE

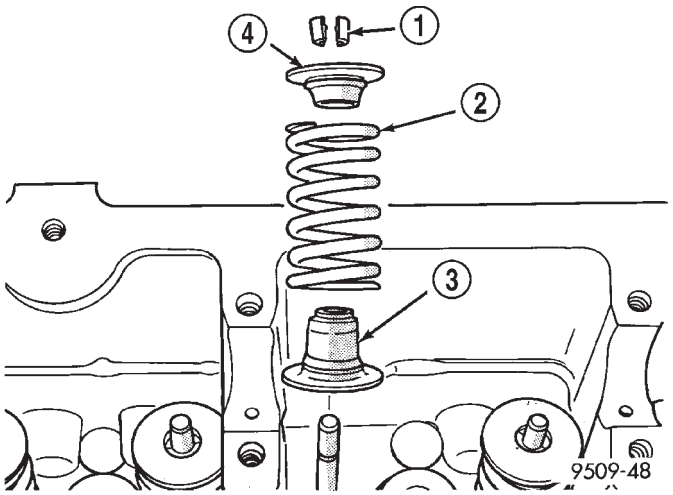

Fig. 107 Valve Stem Seal/Valve Spring Seat

1 – VALVE RETAINING LOCKS
2 – VALVE SPRING
3 – VALVE SEAL AND VALVE SPRING SEAT ASSEMBLY
4 – VALVE SPRING RETAINER

CYLINDER HEAD

REMOVAL

(1) Perform fuel system pressure release procedure **before attempting any repairs.** Refer to FUEL SYSTEM for procedure.

(2) Disconnect inlet air temperature sensor and make-up air hose.

(3) Remove clean air hose and air cleaner housing.

(4) Disconnect negative cable from battery.

(5) Drain cooling system. Refer to COOLING SYSTEM for procedure.

(6) Remove upper intake manifold. Refer to procedure in this section.

(7) Remove fastener attaching dipstick tube to lower intake manifold (Fig. 108).

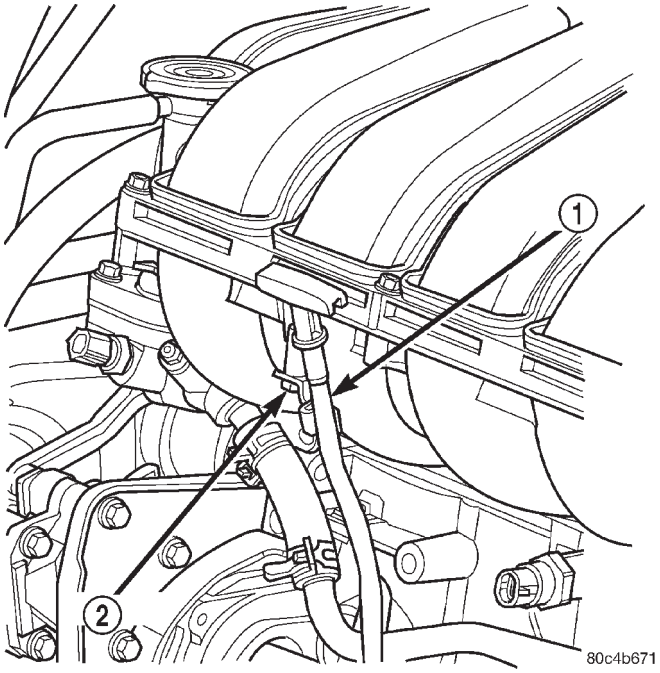

Fig. 108 Dipstick Tube

1 – DIPSTICK TUBE
2 – SCREW

(8) Disconnect the fuel supply line quick-connect at the fuel rail assembly. Refer to FUEL SYSTEM for procedure.

(9) Remove heater tube support bracket from cylinder head.

(10) Disconnect upper radiator and heater supply hoses from coolant outlet connections.

(11) Remove accessory drive belts. Refer to COOLING SYSTEM for procedure.

(12) Raise vehicle and disconnect exhaust pipe from manifold.

(13) Disconnect ignition coil wiring connector. Remove ignition coil and plug wires from engine.

(14) Disconnect cam sensor wiring connector (Fig. 109).

(15) Remove timing belt and camshaft sprockets. Refer to procedures in this section.

(16) Remove timing belt idler pulley and rear timing belt cover. Refer to procedures in this section.

(17) Remove power steering pump fluid reservoir and support bracket to cylinder head (Fig. 110).

(18) Remove cylinder head cover. Refer to procedure in this section.

(19) Remove camshafts. Refer to procedure in this section.

(20) Remove camshaft followers.

(21) Remove cylinder head bolts in the reverse sequence of tightening (Fig. 113).

REMOVAL AND INSTALLATION (Continued)

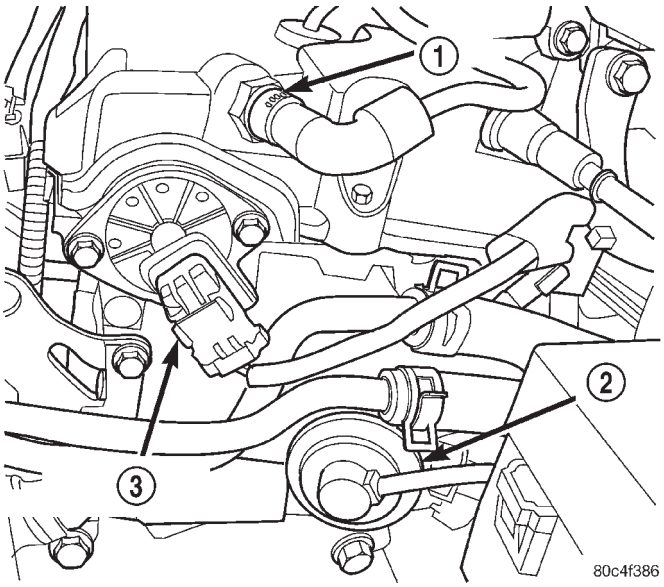

Fig. 109 Camshaft Position Sensor

1 – PCV VALVE
2 – EGR VALVE
3 – CAMSHAFT POSITION SENSOR

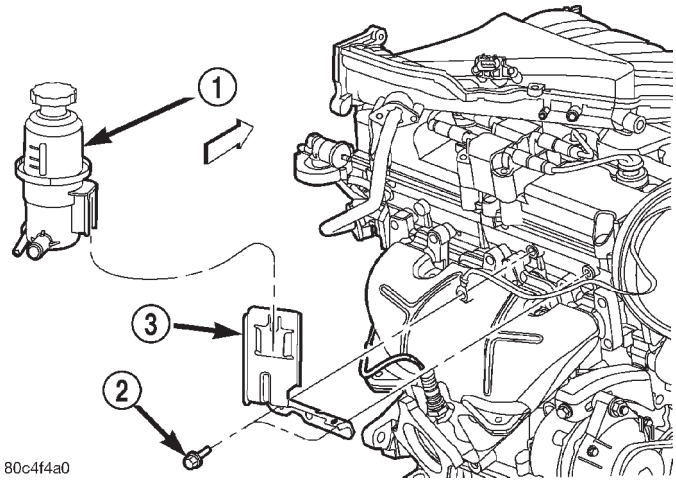

Fig. 110 Power Steering Fluid Reservoir and Bracket

1 – POWER STEERING RESERVOIR
2 – BOLT
3 – BRACKET

(22) Remove cylinder head from engine block.

(23) Inspect and clean cylinder head and block sealing surfaces. Refer to Cleaning and Inspection in this section for procedures.

NOTE: Ensure cylinder head bolt holes in the block are clean, dry (free of residual oil or coolant), and threads are not damaged.

INSTALLATION

NOTE: The Cylinder head bolts should be examined BEFORE reuse. If the threads are necked down, the bolts should be replaced (Fig. 111).

Necking can be checked by holding a scale or straight edge against the threads. If all the threads do not contact the scale, the bolt should be replaced.

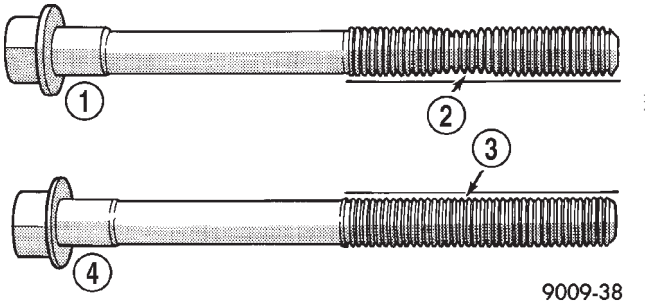

Fig. 111 Checking Bolts for Stretching (Necking)

1 – STRETCHED BOLT
2 – THREADS ARE NOT STRAIGHT ON LINE
3 – THREADS ARE STRAIGHT ON LINE
4 – UNSTRETCHED BOLT

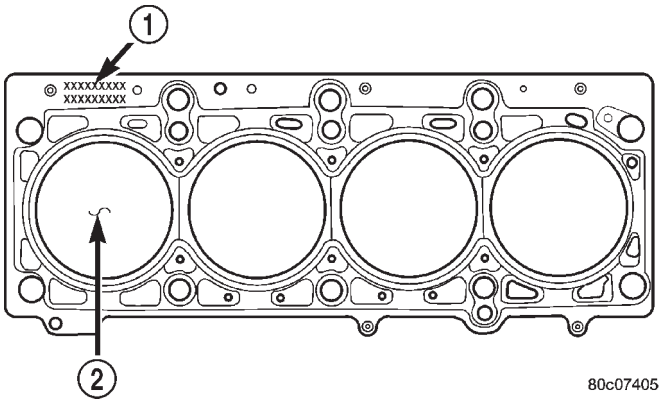

Fig. 112 Cylinder Head Gasket Positioning

1 – PART NUMBER FACES UP
2 – NO. 1 CYLINDER

(1) Position the new cylinder head gasket on cylinder block with the part number facing up (Fig. 112). Ensure gasket is seated over the locating dowels in block.

(2) Before installing the bolts, the threads should be lightly coated with engine oil.

(3) Tighten the cylinder head bolts in the sequence shown in (Fig. 113). Using the 4 step torque-turn method, tighten according to the following values:

- First All to 34 N·m (25 ft. lbs.)
- Second All to 68 N·m (50 ft. lbs.)
- Third All to 68 N·m (50 ft. lbs.)

REMOVAL AND INSTALLATION (Continued)

CAUTION: Do not use a torque wrench for the following step.

- Fourth Turn an additional 1/4 Turn,

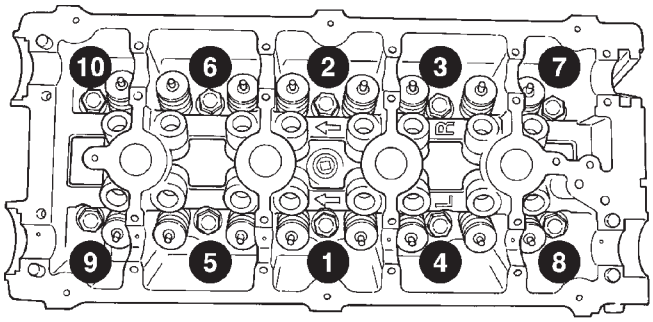

Fig. 113 Cylinder Head Tightening Sequence

(4) Install cam followers and camshafts. Refer to procedures in this section.

(5) Install cylinder head cover. Refer to procedure in this section.

(6) Install rear timing belt cover and timing belt idler pulley.

(7) Install camshaft sprockets and timing belt. Refer to procedures in this section.

(8) Connect cam sensor wiring connector (Fig. 109).

(9) Install ignition coil and plug wires. Connect ignition coil wiring connector.

(10) Install power steering pump reservoir and support bracket to cylinder head (Fig. 110).

(11) Raise vehicle and install the exhaust pipe to the manifold.

(12) Install accessory drive belts. Refer to COOLING SYSTEM for procedure.

(13) Install lower intake manifold. Refer to procedure in this section.

(14) Connect upper radiator and heater supply hoses to coolant outlet connections.

(15) Install heater tube support bracket to cylinder head.

(16) Install fastener attaching dipstick tube to lower intake manifold (Fig. 108).

(17) Connect fuel supply line quick-connect at the fuel rail assembly. Refer to FUEL SYSTEM for procedure.

(18) Install upper intake manifold. Refer to procedure in this section.

(19) Fill cooling system. Refer to COOLING SYSTEM for procedure.

(20) Connect negative cable to battery.

(21) Install clean air hose and air cleaner housing.

(22) Connect inlet air temperature sensor and make-up air hose.

(23) Perform camshaft/crankshaft synchronization procedure. Refer to procedure in this section.

VALVE AND VALVE SPRING

REMOVAL

(1) With cylinder head removed, compress valve springs using a universal valve spring compressor.

(2) Remove valve retaining locks, valve spring retainers, valve stem seals and valve springs.

(3) Before removing valves, **remove any burrs from valve stem lock grooves to prevent damage to the valve guides.** Identify valves to insure installation in original location.

(4) Inspect and clean the valves. Refer to Cleaning and Inspection in this section for procedure.

INSTALLATION

(1) Coat valve stems with clean engine oil and insert in cylinder head.

(2) Install new valve stem seals on all valves using a valve stem seal tool (Fig. 114). The valve stem seals should be pushed firmly and squarely over valve guide.

CAUTION: When oversize valves are used, the corresponding oversize valve seal must also be used. Excessive guide wear may result if oversize seals are not used with oversize valves.

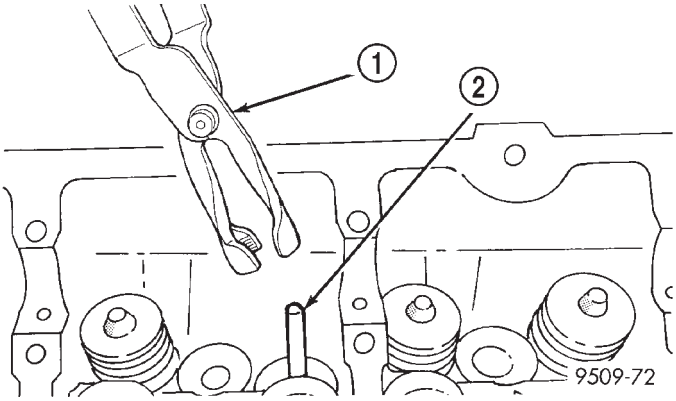

Fig. 114 Valve Stem Oil Seal Tool

1 – VALVE SEAL TOOL
2 – VALVE STEM

(3) Install valve springs and retainers. Compress valve springs only enough to install locks, taking care not to misalign the direction of compression. Nicked valve stems may result from misalignment of the valve spring compressor.

CAUTION: When depressing the valve spring retainers with valve spring compressor the locks can become dislocated. Ensure both locks are in the correct location after removing tool.

REMOVAL AND INSTALLATION (Continued)

(4) Check the valve spring installed height B after refacing the valve and seat (Fig. 115). Make sure measurements are taken from top of spring seat to the bottom surface of spring retainer. If height is greater than 38.75 mm (1.525 in.), install a 0.762 mm (0.030 in.) spacer under the valve spring seat to bring spring height back within specification.

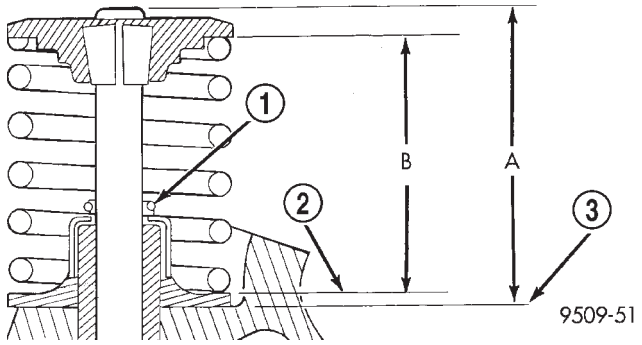

Fig. 115 Checking Spring Installed Height and Valve Tip Height Dimensions

1 – GARTER SPRING
2 – VALVE SPRING SEAT
3 – CYLINDER HEAD SURFACE

OIL PAN

REMOVAL

(1) Raise vehicle on hoist.
(2) Drain engine oil and remove oil filter.
(3) Remove right inner splash shield.
(4) Remove structural collar. Refer to procedure in this section.
(5) Remove lower torque strut. Refer to procedure in this section.
(6) Remove oil filter adapter and gasket (Fig. 116).
(7) Remove oil pan and gasket (Fig. 116).
(8) Clean oil pan and all gasket surfaces.

INSTALLATION

(1) Apply Mopar® Engine RTV GEN II at the oil pump to engine block parting lines (Fig. 117).
(2) Install oil pan gasket to the block.
(3) Install pan gasket and pan. Tighten screws to 12 N·m (105 in. lbs.).
(4) Install oil filter adapter and gasket (Fig. 116). Tighten screws to 12 N·m (105 in. lbs.).
(5) Install oil drain plug and oil filter.
(6) Install structural collar. Refer to procedure in this section.
(7) Install lower torque strut. Refer to procedure in this section.
(8) Lower vehicle and fill engine crankcase with proper oil to correct level.

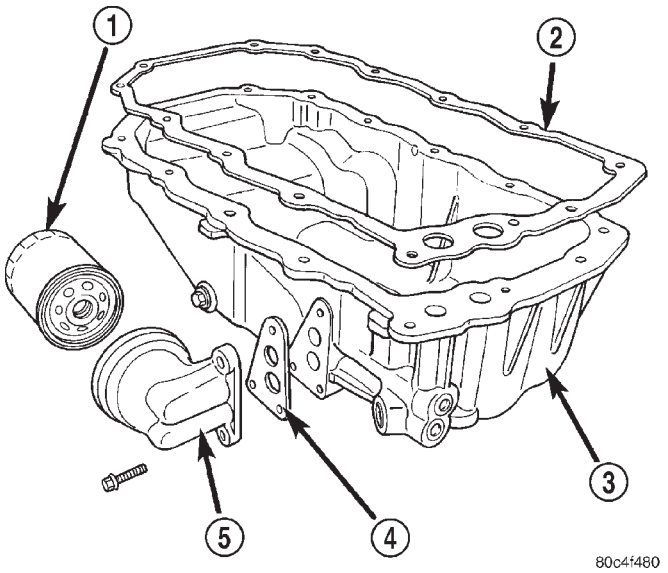

Fig. 116 Oil Pan

1 – OIL FILTER
2 – OIL PAN GASKET
3 – OIL PAN
4 – ADAPTER GASKET
5 – OIL FILTER ADAPTER

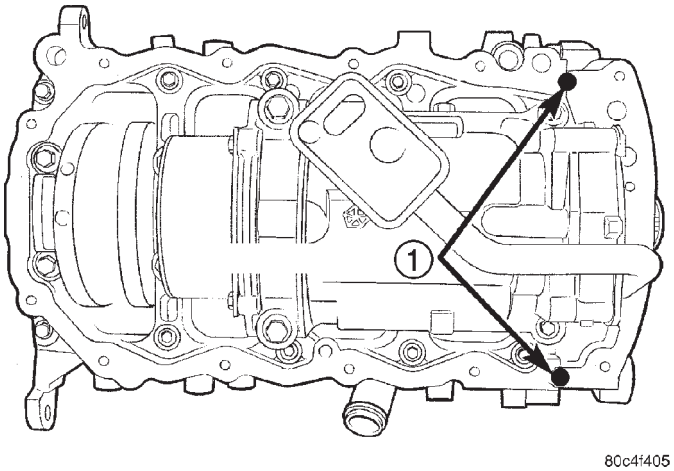

Fig. 117 Oil Pan Sealing

1 – SEALER LOCATIONS

BALANCE SHAFTS AND CARRIER ASSEMBLY

BALANCE SHAFTS

REMOVAL

(1) Drain engine oil and remove oil pan. Refer to procedures in this section.
(2) Remove oil pick-up tube.
(3) Remove chain cover, guide and tensioner (Fig. 118). Also see Carrier Assembly – Removal for service procedures requiring only temporary relocation of assembly.

REMOVAL AND INSTALLATION (Continued)

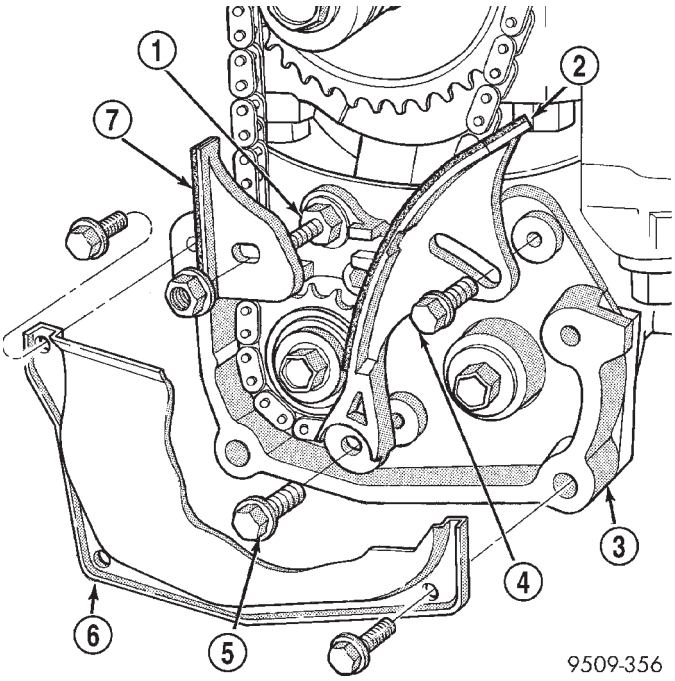

Fig. 118 Chain Cover, Guide and Tensioner

1 – STUD
2 – TENSIONER (ADJUSTER)
3 – GEAR COVER
4 – ADJUST SCREW
5 – PIVOT SCREW
6 – CHAIN COVER (CUTAWAY)
7 – GUIDE

(4) Remove gear/sprocket retaining screws.

(5) Remove chain and sprocket assembly (Fig. 119). Using two wide pry bars, work the sprocket back and forth until it is off the shaft.

(6) Remove gear cover retaining stud (double ended to also retain chain guide), gear cover, and balance shaft gears (Fig. 118).

(7) Remove rear cover and balance shafts (Fig. 121).

(8) Remove four carrier to crankcase attaching bolts to separate carrier from engine bedplate.

BALANCE SHAFT CARRIER

REMOVAL

The following components will remain intact during carrier removal. Gear cover, gears, balance shafts and the rear cover (Fig. 121).

(1) Remove chain cover and driven balance shaft chain sprocket screw.

(2) Loosen tensioner pivot and adjusting screws, move driven balance shaft inboard through driven chain sprocket. Sprocket will hang in lower chain loop.

(3) Remove carrier to crankcase attaching bolts to remove carrier.

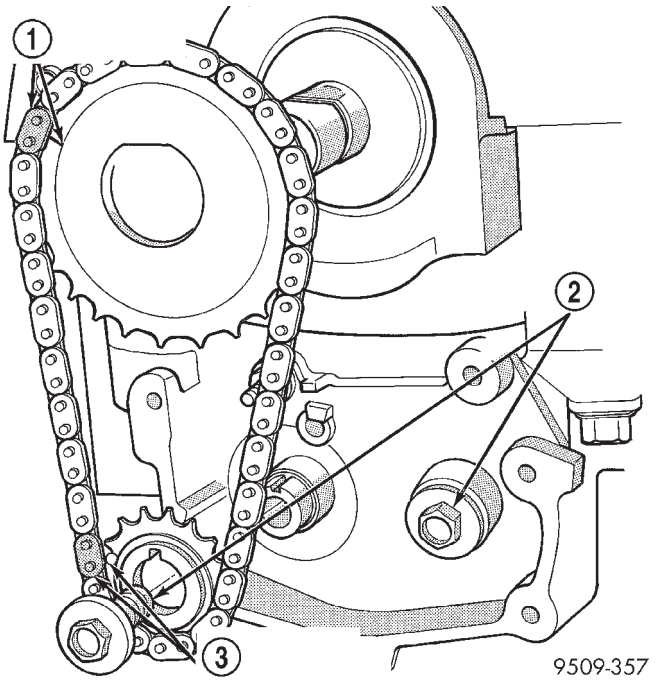

Fig. 119 Drive Chain and Sprockets

1 – NICKEL PLATED LINK AND MARK
2 – GEAR/SPROCKET SCREWS
3 – NICKEL PLATED LINK AND DOT

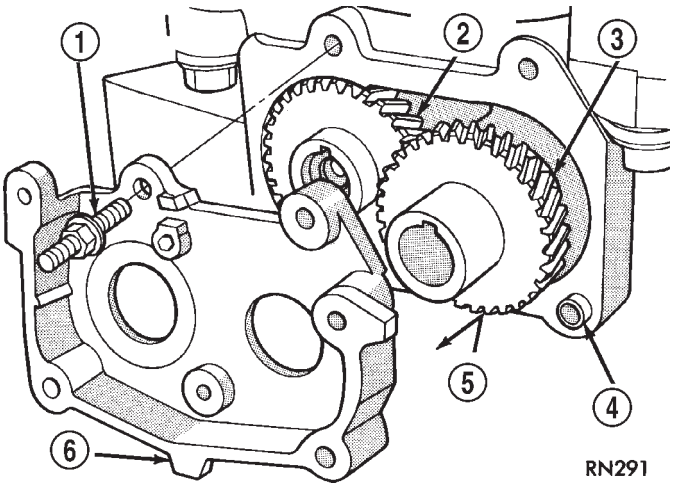

Fig. 120 Gear Cover and Gears

1 – STUD (DOUBLE ENDED)
2 – DRIVE GEAR
3 – DRIVEN GEAR
4 – CARRIER DOWEL
5 – GEAR(S)
6 – GEAR COVER

REMOVAL AND INSTALLATION (Continued)

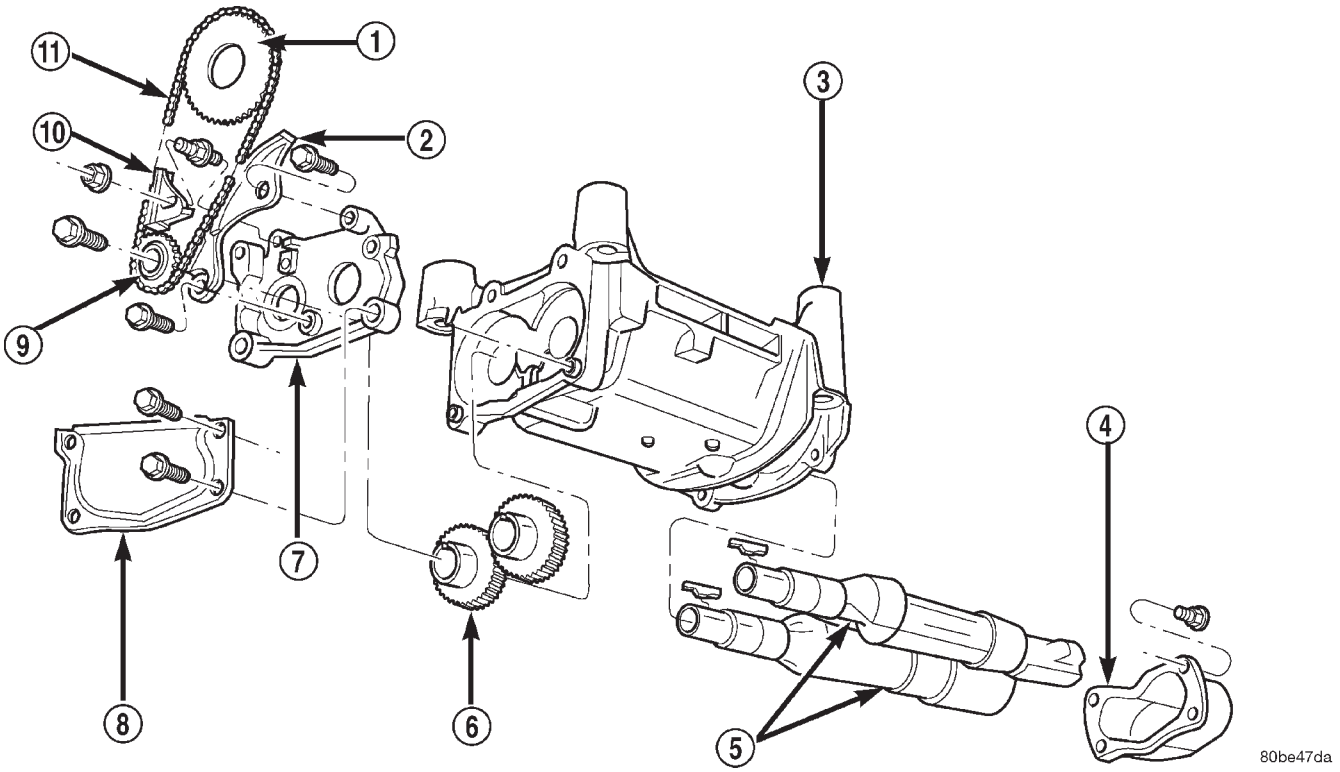

Fig. 121 Balance Shaft(s)—Removal/Installation

1 – SPROCKET
2 – TENSIONER
3 – CARRIER
4 – REAR COVER
5 – BALANCE SHAFTS
6 – GEARS
7 – GEAR COVER
8 – CHAIN COVER
9 – SPROCKET
10 – GUIDE
11 – CHAIN

BALANCE SHAFT INSTALLATION

Balance shaft and carrier assembly installation is the reverse of the removal procedure. **During installation crankshaft-to-balance shaft timing must be established. Refer to Timing procedure in this section.**

BALANCE SHAFT TIMING

(1) With balance shafts installed in carrier (Fig. 121) position carrier on crankcase and install four attaching bolts and tighten to 54 N·m (40 ft. lbs.).

(2) Turn balance shafts until both shaft key ways are up, parallel to vertical centerline of engine. Install short hub drive gear on sprocket driven shaft and long hub gear on gear driven shaft. After installation gear and balance shaft keyways must be up with gear timing marks meshed as shown in (Fig. 122).

(3) Install gear cover and tighten double ended stud/washer fastener to 12 N·m (105 in. lbs.).

(4) Align flat on balance shaft drive sprocket to the flat on crankshaft (Fig. 123).

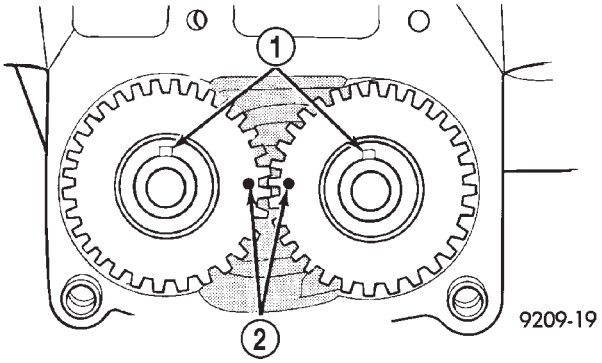

Fig. 122 Gear Timing

1 – KEY WAYS UP
2 – GEAR ALIGNMENT DOTS

(5) Install balance shaft drive sprocket on crankshaft using Special Tool 6052 (Fig. 124).

(6) Turn crankshaft until number 1 cylinder is at top dead center (TDC). The timing marks on the chain sprocket should line up with the parting line

REMOVAL AND INSTALLATION (Continued)

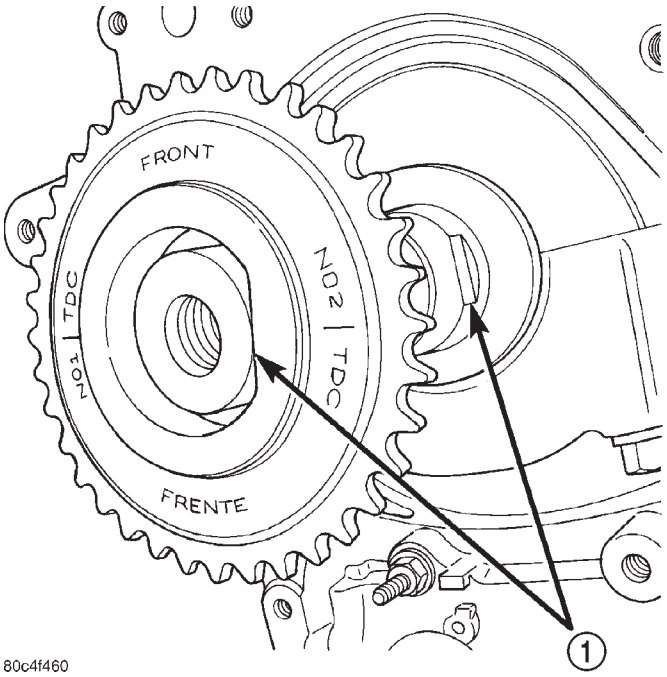

Fig. 123 Balance Shaft Sprocket Alignment to Crankshaft

1 – ALIGN FLATS

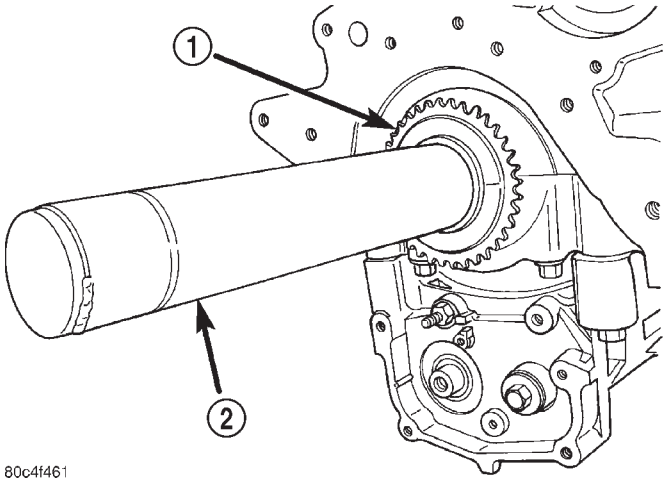

Fig. 124 Balance Shaft Drive Sprocket—Installation

1 – SPROCKET
2 – SPECIAL TOOL 6052

on the left side of number one main bearing cap. (Fig. 125).

(7) Place chain over crankshaft sprocket so that the plated link of the chain is over the number 1 cylinder timing mark on the balance shaft crankshaft sprocket (Fig. 125).

(8) Place balance shaft sprocket into the timing chain (Fig. 125) and align the timing mark on the sprocket (dot) with the (lower) plated link on the chain.

NOTE: The lower plated link is 8 links from the upper link.

(9) With balance shaft keyways pointing up (12 o'clock) slide the balance shaft sprocket onto the nose of the balance shaft. The balance shaft may have to be pushed in slightly to allow for clearance.

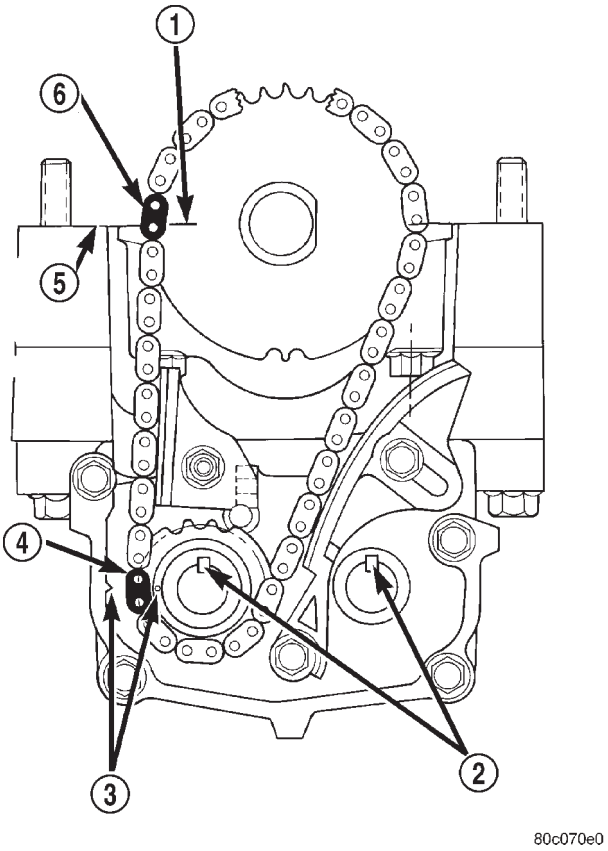

Fig. 125 Balance Shaft Timing

1 – MARK ON SPROCKET
2 – KEYWAYS UP
3 – ALIGN MARKS
4 – PLATED LINK
5 – PARTING LINE (BEDPLATE TO BLOCK)
6 – PLATED LINK

NOTE: THE TIMING MARK ON THE SPROCKET, THE (LOWER) NICKEL PLATED LINK, AND THE ARROW ON THE SIDE OF THE GEAR COVER SHOULD LINE UP WHEN THE BALANCE SHAFTS ARE TIMED CORRECTLY.

(10) If the sprockets are timed correctly, install the balance shaft bolts and tighten to 28 N·m (250 in. lbs.). A wood block placed between crankcase and crankshaft counterbalance will prevent crankshaft and gear rotation.

(11) **CHAIN TENSIONING:**

(a) Install chain tensioner loosely assembled.

REMOVAL AND INSTALLATION (Continued)

(b) Position guide on double ended stud making sure tab on the guide fits into slot on the gear cover. Install and tighten nut/washer assembly to 12 N·m (105 in. lbs.).

(c) Place a shim 1 mm (0.039 in.) thick x 70 mm (2.75 in.) long or between tensioner and chain. Push tensioner and shim up against the chain. **Apply firm pressure 2.5–3 Kg (5.5–6.6 lbs.) directly behind the adjustment slot to take up all slack.** Chain must have shoe radius contact as shown in (Fig. 126).

(d) With the load applied, tighten top tensioner bolt first, then bottom pivot bolt. Tighten bolts to 12 N·m (105 in. lbs.). Remove shim.

(e) Install carrier covers and tighten screws to 12 N·m (105 in. lbs.).

(12) Install pick-up tube and oil pan.

(13) Fill engine crankcase with proper oil to correct level.

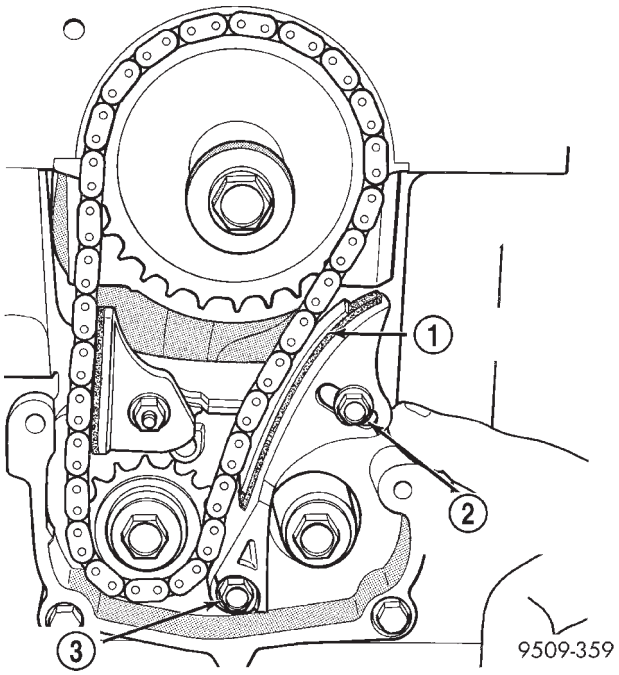

Fig. 126 Chain Tension Adjustment

1 – 1MM (0.039 IN.) SHIM
2 – TENSIONER (ADJUSTER) BOLT
3 – PIVOT BOLT

CRANKSHAFT OIL SEAL—FRONT

REMOVAL

(1) Using Special Tool 1026 and Insert 6827-A, remove crankshaft damper (Fig. 127).

(2) Remove timing belt. Refer to procedure in this section.

(3) Remove crankshaft sprocket using Special Tool 6793 and insert C-4685-C2 (Fig. 128).

CAUTION: Do not nick shaft seal surface or seal bore.

(4) Using Tool 6771 to remove front crankshaft oil seal (Fig. 129). Be careful not to damage the seal surface of cover.

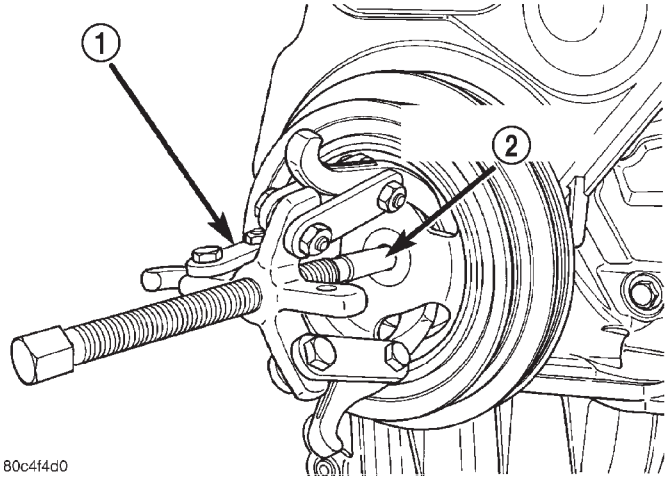

Fig. 127 Crankshaft Damper—Removal

1 – SPECIAL TOOL 1026
3-JAW PULLER
2 – SPECIAL TOOL 6827-A INSERT

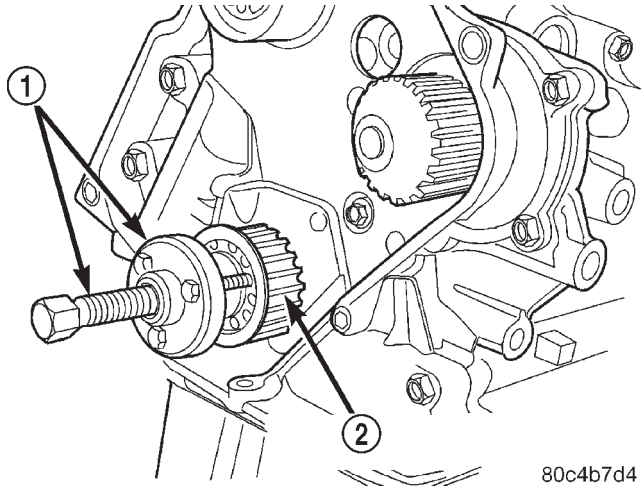

Fig. 128 Crankshaft Sprocket—Removal

1 – SPECIAL TOOL 6793
2 – CRANKSHAFT SPROCKET

INSTALLATION

(1) Install new seal by using Special Tool 6780 (Fig. 130).

(2) Place seal into opening with seal spring towards the inside of engine. Install seal until flush with cover.

(3) Install crankshaft sprocket using Special Tool 6792 (Fig. 131).

REMOVAL AND INSTALLATION (Continued)

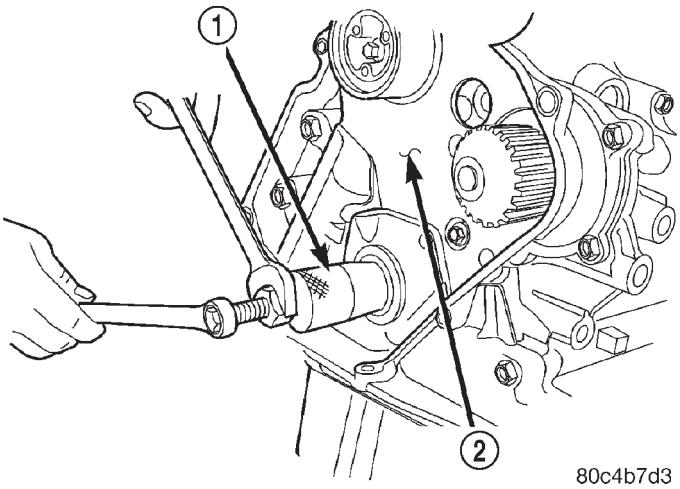

Fig. 129 Front Crankshaft Oil Seal—Removal

1 – SPECIAL TOOL 6771
2 – REAR TIMING BELT COVER

(4) Install timing belt. Refer to procedure in this section.

(5) Install crankshaft damper (Fig. 132). Use thrust bearing/washer and 12M 1.75 x 150 mm bolt from Special Tool 6792. Install crankshaft damper bolt and tighten to 142 N·m (105 ft. lbs.).

CRANKSHAFT OIL SEAL—REAR

REMOVAL

(1) Remove transaxle. Refer to TRANSAXLE for procedure.

(2) Remove flex plate.

(3) Insert a 3/16 flat bladed screwdriver between the dust lip and the metal case of the crankshaft seal. Angle the screwdriver (Fig. 133) through the dust lip against metal case of the seal. Pry out seal.

CAUTION: Do not permit the screwdriver blade to contact crankshaft seal surface. Contact of the screwdriver blade against crankshaft edge (chamfer) is permitted.

INSTALLATION

CAUTION: If burr or scratch is present on the crankshaft edge (chamfer), cleanup with 400 grit sand paper to prevent seal damage during installation of new seal.

NOTE: When installing seal, no lube on seal is needed.

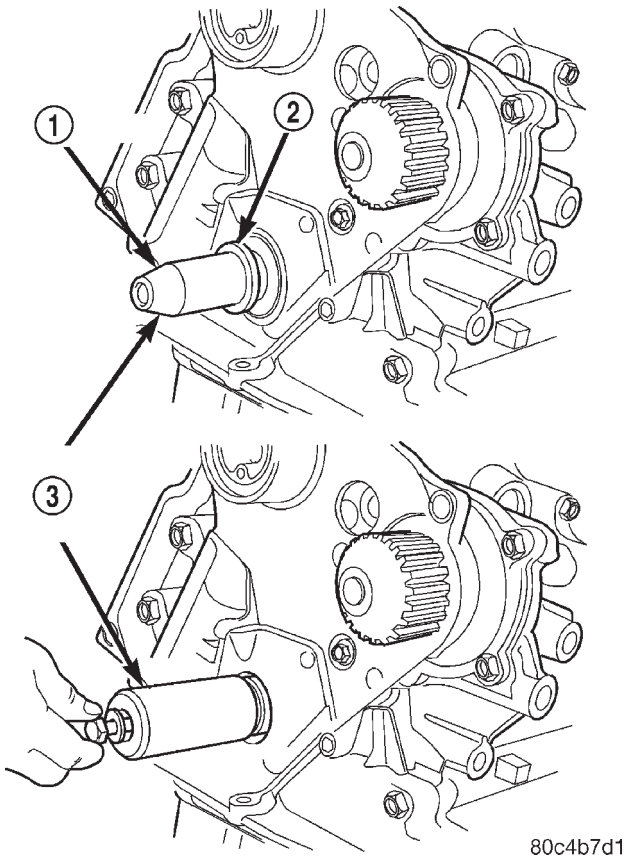

Fig. 130 Front Crankshaft Oil Seal—Installation

1 – PROTECTOR
2 – SEAL
3 – SPECIAL TOOL 6780

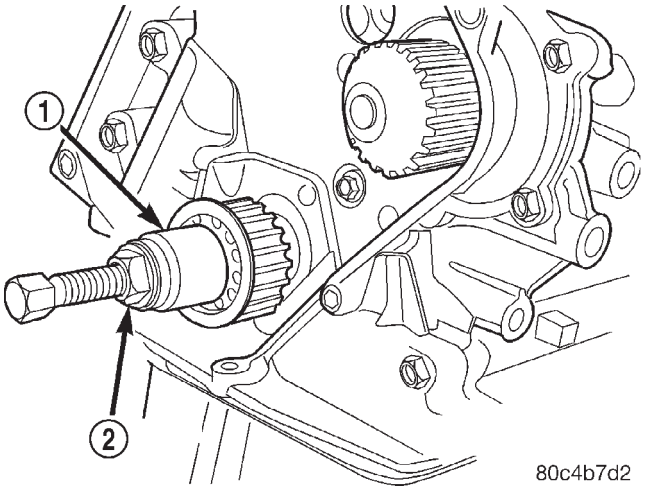

Fig. 131 Crankshaft Sprocket—Installation

1 – SPECIAL TOOL 6792
2 – TIGHTEN NUT TO INSTALL

REMOVAL AND INSTALLATION (Continued)

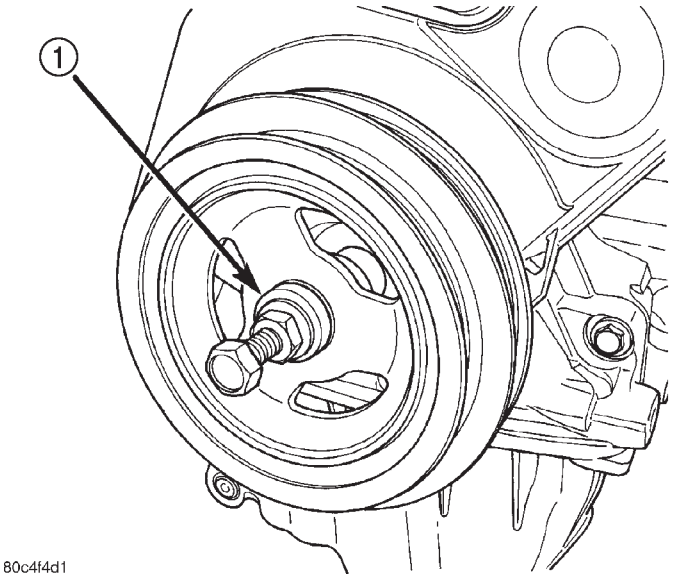

Fig. 132 Crankshaft Damper—Installation

1 – SPECIAL TOOL 6792

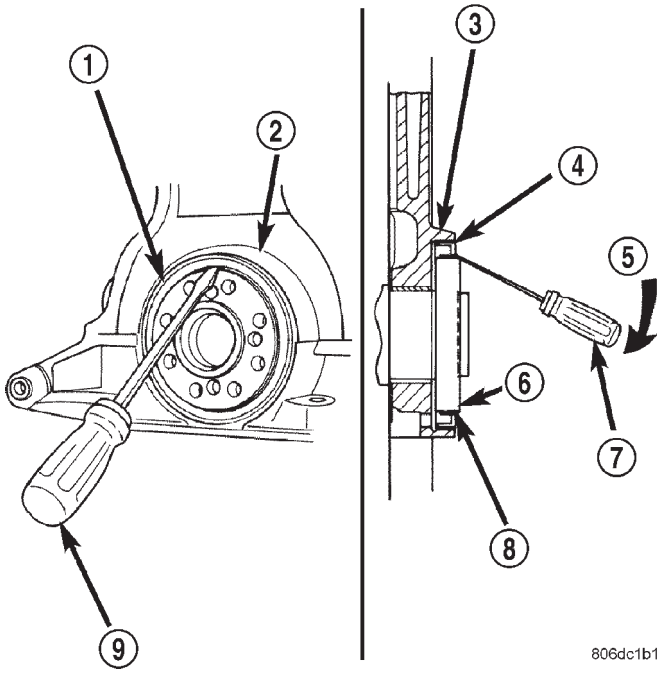

Fig. 133 Rear Crankshaft Oil Seal—Removal

1 – REAR CRANKSHAFT SEAL
2 – ENGINE BLOCK
3 – ENGINE BLOCK
4 – REAR CRANKSHAFT SEAL METAL CASE
5 – PRY IN THIS DIRECTION
6 – CRANKSHAFT
7 – SCREWDRIVER
8 – REAR CRANKSHAFT SEAL DUST LIP
9 – SCREWDRIVER

(1) Place Special Tool 6926-1 Seal Guide on crankshaft (Fig. 134).

(2) Position seal over guide tool (Fig. 134). Guide tool should remain on crankshaft during installation of seal. Ensure that the lip of the seal is facing towards the crankcase during installation.

CAUTION: If the seal is driven into the block past flush, this may cause an oil leak.

(3) Drive the seal into the block using Special Tool 6926-2 and handle C-4171 (Fig. 135) until the tool bottoms out against the block (Fig. 136).

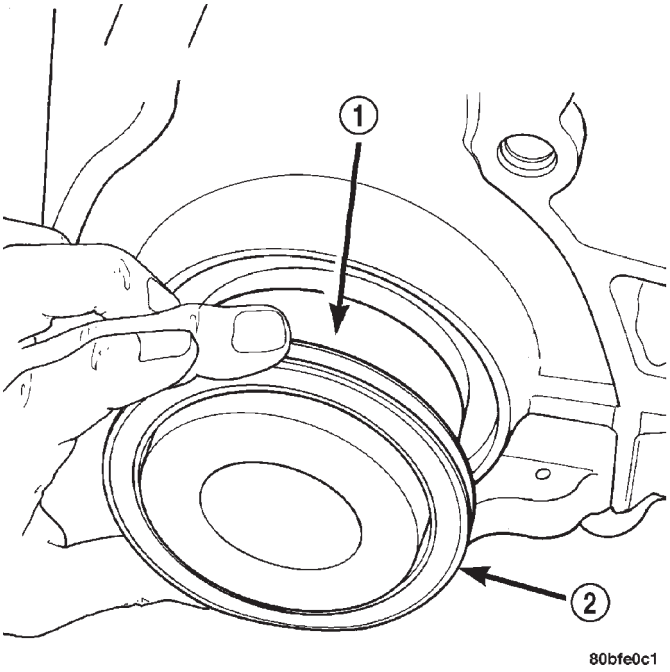

Fig. 134 Rear Crankshaft Seal and Special Tool 6926-1

1 – SPECIAL TOOL 6926–1 PILOT
2 – SEAL

(4) Install flex plate. Apply Mopar® Lock & Seal Adhesive to bolt threads and tighten bolts to 95 N·m (70 ft. lbs.).

(5) Install transaxle. Refer to TRANSAXLE for procedure.

REMOVAL AND INSTALLATION (Continued)

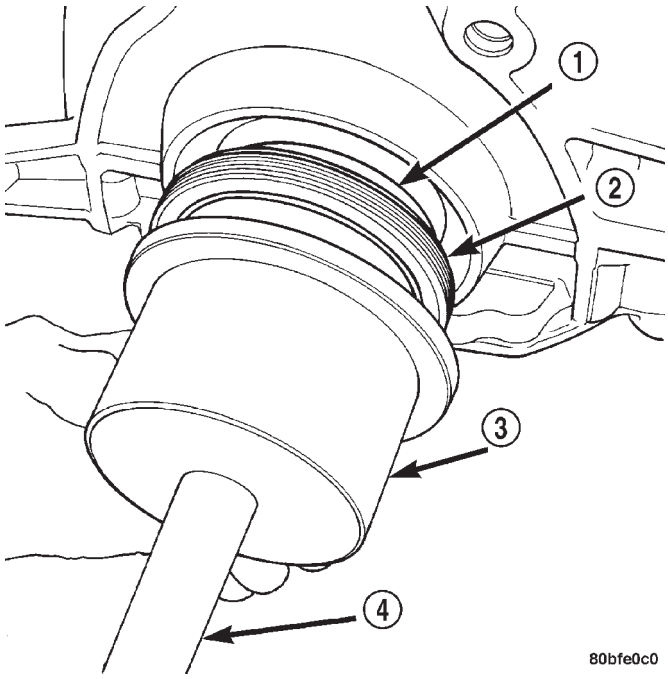

Fig. 135 Crankshaft Seal and Special Tools 6926-2 & C-4171

1 – SPECIAL TOOL 6926–1 PILOT
2 – SEAL
3 – SPECIAL TOOL 6926–2 INSTALLER
4 – SPECIAL TOOL C-4171

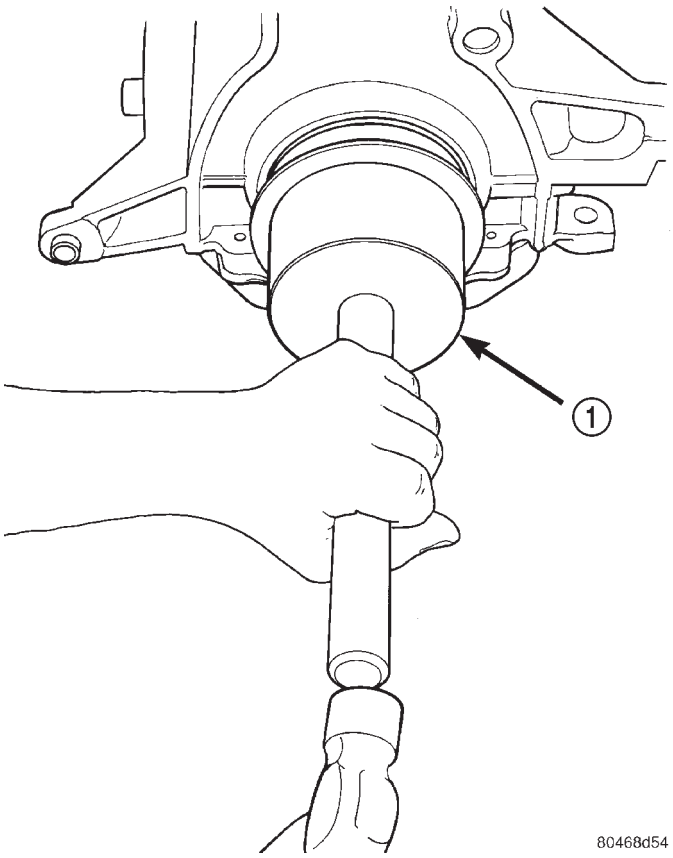

Fig. 136 Rear Crankshaft Seal—Installation

1 – SPECIAL TOOL 6926–2 INSTALLER

CRANKSHAFT

REMOVAL

NOTE: Crankshaft can not be removed when engine is in vehicle.

(1) Remove engine assembly from vehicle. Refer to procedure in this section.
(2) Separate engine from transaxle.
(3) Remove flex plate and crankshaft rear oil seal.
(4) Mount engine on a repair stand.
(5) Remove oil filter and oil pan. Refer to procedure in this section.
(6) Remove engine support bracket, timing belt covers, timing belt and oil pump.
(7) Remove balance shafts and housing assembly. Refer to procedure in this section.
(8) Remove all bedplate bolts from the engine block (Fig. 139).
(9) Using a mallet gently tap the bedplate loose from the engine block dowel pins.

CAUTION: Do not pry up on one side of the bedplate. Damage may occur to cylinder block to bedplate alignment and thrust bearing.

(10) Bedplate should be removed evenly from the cylinder block dowel pins to prevent damage to the dowel pins and thrust bearing.
(11) Lift out crankshaft from cylinder block. Do not damage the main bearings or journals when removing the crankshaft.

INSTALLATION

(1) Install the main bearing shells with the lubrication groove in the cylinder block (Fig. 137).
(2) Make certain oil holes in block line up with oil hole in bearings and bearing tabs seat in the block tab slots.

CAUTION: Do not get oil on the bedplate mating surface. It will may affect the sealer ability to seal the bedplate to cylinder block.

(3) Oil the bearings and journals. Install crankshaft.

CAUTION: Use only the specified anaerobic sealer on the bedplate or damage may occur to the engine.

REMOVAL AND INSTALLATION (Continued)

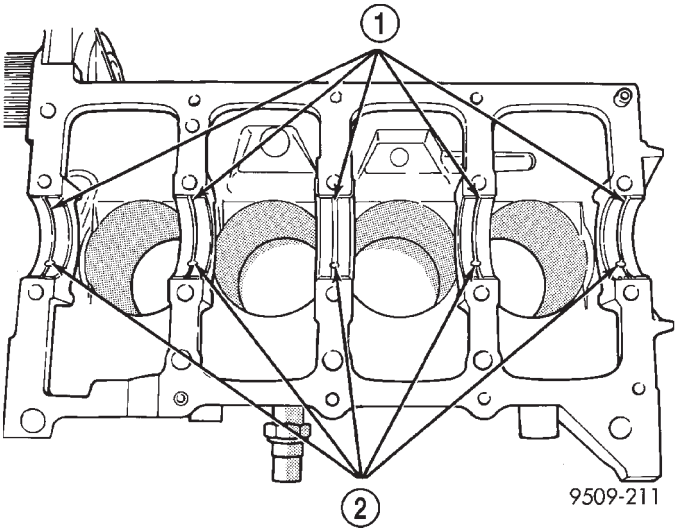

Fig. 137 Installing Main Bearing Upper Shell

1 – LUBRICATION GROOVES
2 – OIL HOLES

(4) Apply 1.5 to 2.0 mm (0.059 to 0.078 in.) bead of Mopar® Bed Plate Sealant to cylinder block as shown in (Fig. 138).

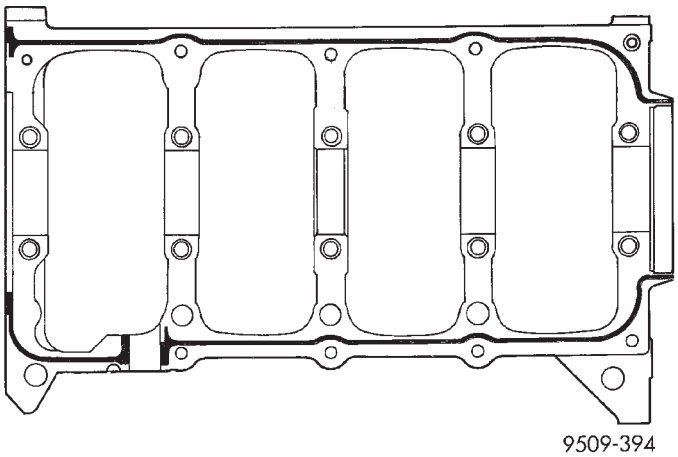

Fig. 138 Bedplate Sealing

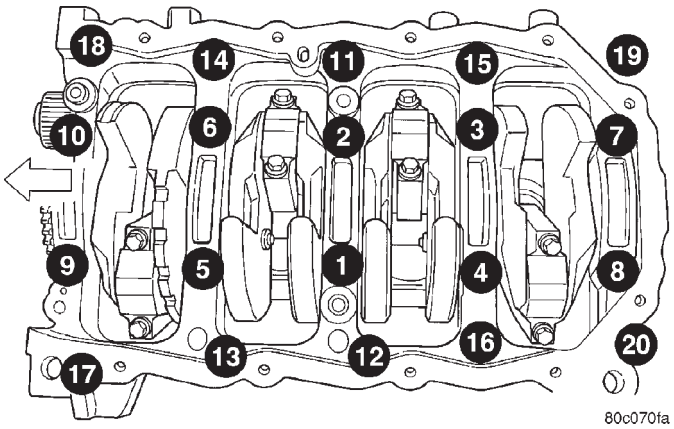

Fig. 139 Bedplate Torque Sequence

(5) Install lower main bearings into main bearing cap/bedplate. Make certain the bearing tabs are seated into the bedplate slots. Install the main bearing/bedplate into engine block.

(6) Before installing the bolts the threads should be oiled with clean engine oil, wipe off any excess oil.

(7) Install main bearing bedplate to engine block bolts 11, 17, and 20 finger tight. Tighten these bolts down together until the bedplate contacts the cylinder block.

(8) To ensure correct thrust bearing alignment, perform the following steps:

- Step 1: Rotate crankshaft until number 4 piston is at TDC.
- Step 2: Move crankshaft rearward to limits of travel.
- Step 3: Then, move crankshaft forward to limits of travel.
- Step 4: Wedge an appropriate tool between the rear of the cylinder block **(NOT BED PLATE)** and the rear crankshaft counterweight. This will hold the crankshaft in it's furthest forward position.
- Step 5: Install and tighten bolts (1–10) in sequence shown in (Fig. 139) to 41 N·m (30 ft. lbs.).
- Step 6: Remove wedge tool used to hold crankshaft.

(9) Tighten bolts (1–10) again to 41 N·m (30 ft. lbs.) +1/4 turn in sequence shown in (Fig. 139).

(10) Install main bearing bedplate to engine block bolts (11–20), and torque each bolt to 28 N·m (20 ft. lbs.) in sequence shown in (Fig. 139).

(11) After the main bearing bedplate is installed, check the crankshaft turning torque. The turning torque should not exceed 5.6 N·m (50 in. lbs.).

(12) Install balance shafts and housing assembly.

(13) Install oil pump, timing belt rear cover, timing belt and front covers.

(14) Install engine support bracket.

(15) Install oil pan and oil filter.

(16) Install crankshaft rear oil seal. Refer to procedure in this section.

(17) Install flex plate. Apply Mopar® Lock & Seal Adhesive to bolt threads and tighten to 95 N·m (70 ft. lbs.).

(18) Attach transaxle to engine. Tighten attaching bolts to 101 N·m (75 ft. lbs.).

(19) Install engine assembly. Refer to procedure in this section.

PISTON AND CONNECTING ROD

REMOVAL

(1) Remove cylinder head, oil pan and balance shaft assembly. Refer to procedures in this section.

(2) Remove top ridge of cylinder bores with a reliable ridge reamer before removing pistons from cyl-

REMOVAL AND INSTALLATION (Continued)

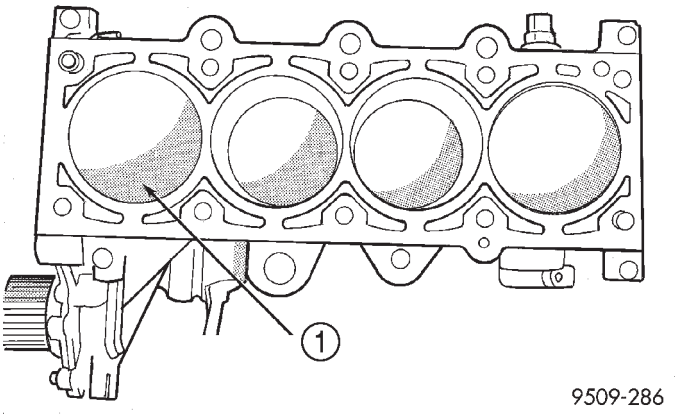

Fig. 140 Piston Markings

1 – DIRECTIONAL ARROW WILL BE IMPRINTED IN THIS AREA

inder block. **Be sure to keep tops of pistons covered during this operation**. Mark piston with matching cylinder number (Fig. 140).

(3) Scribe the cylinder number on the side of the rod and cap (Fig. 141) for identification.

(4) Pistons have a directional stamping in the front half of the piston facing towards the **front** of engine.

(5) Pistons and connecting rods must be removed from top of cylinder block. Rotate crankshaft so that each connecting rod is centered in cylinder bore.

(6) Remove connecting rod cap bolts. Push each piston and rod assembly out of cylinder bore.

NOTE: Be careful not to nick crankshaft journals.

(7) After removal, install bearing cap on the mating rod.

NOTE: Piston and connecting rods are serviced as an assembly.

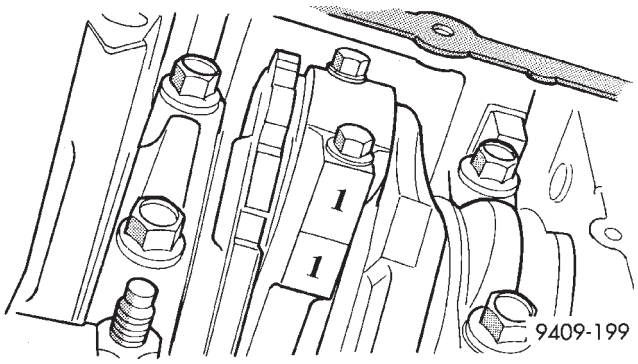

Fig. 141 Identify Connecting Rod to Cylinder

(8) Inspect cylinder bore for wear. Refer to Cylinder Block—Cleaning and Inspection in this section.

INSTALLATION

(1) For proper piston ring seating, deglaze/hone the cylinder bore. Refer to procedure in this section.

(2) Before installing pistons and connecting rod assemblies into the bore, be sure that compression ring gaps are staggered so that neither is in line with oil ring rail gap.

(3) Before installing the ring compressor, make sure the oil ring expander ends are butted and the rail gaps located as shown in (Fig. 142). As viewed from top.

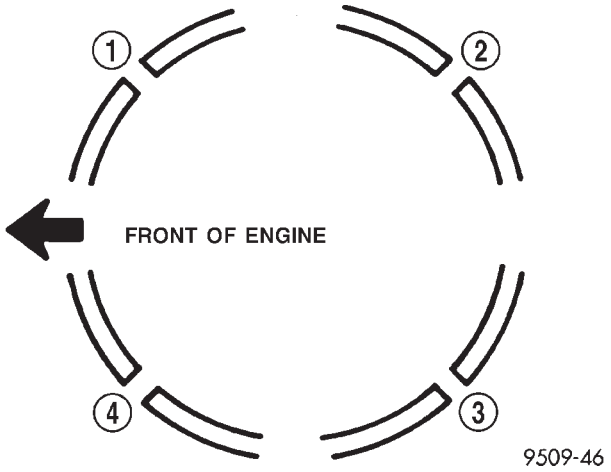

Fig. 142 Piston Ring End Gap Position

1 – GAP OF LOWER SIDE RAIL
2 – NO. 1 RING GAP
3 – GAP OF UPPER SIDE RAIL
4 – NO. 2 RING GAP AND SPACER EXPANDER GAP

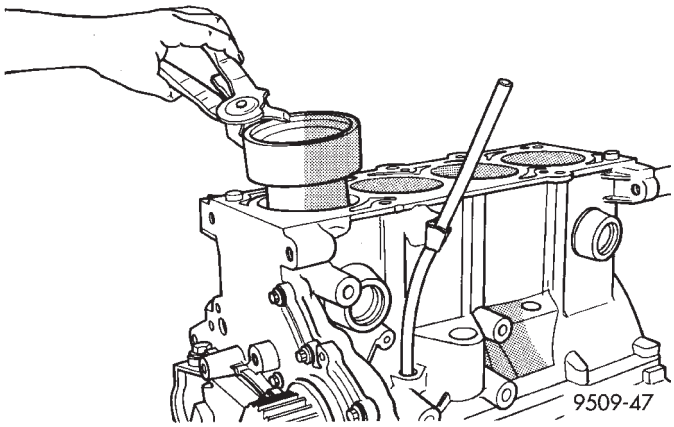

Fig. 143 Piston—Installation

(4) Immerse the piston head and rings in clean engine oil, slide the ring compressor, over the piston (Fig. 143). **Be sure position of rings does not change during this operation**.

(5) The directional stamp on the piston should face toward the front of the engine (Fig. 140).

REMOVAL AND INSTALLATION (Continued)

(6) Rotate crankshaft so that the connecting rod journal is on the center of the cylinder bore. Insert rod and piston assembly into cylinder bore and guide rod over the crankshaft journal.

(7) Tap the piston down in cylinder bore, using a hammer handle. At the same time, guide connecting rod into position on connecting rod journal.

NOTE: The connecting rod cap bolts should not be reused.

(8) Before installing the **NEW** bolts the threads should be coated with clean engine oil.

(9) Install each bolt finger tight than alternately torque each bolt to assemble the cap properly.

CAUTION: Do not use a torque wrench for second part of last step.

(10) Tighten the bolts to 27 N·m PLUS 1/4 turn (20 ft. lbs. PLUS 1/4 turn).

(11) Using a feeler gauge, check connecting rod side clearance (Fig. 144).

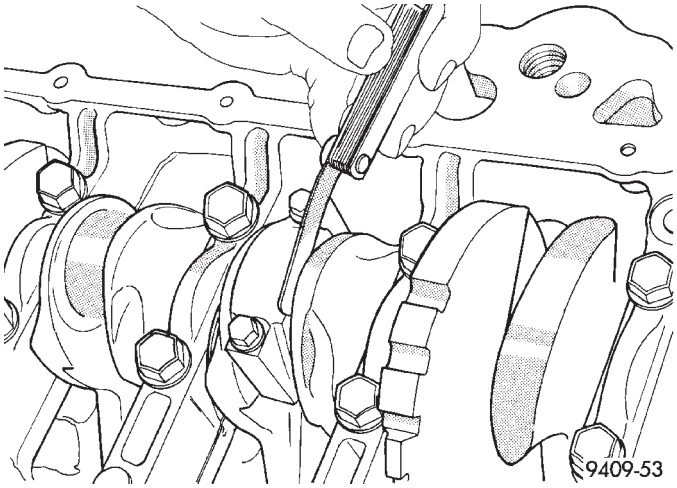

Fig. 144 Checking Connecting Rod Side Clearance

(12) Install balance shaft assembly oil pan. and cylinder head. Refer to procedures in this section.

OIL PUMP

REMOVAL

(1) Disconnect negative cable from battery.

(2) Remove timing belt. Refer to procedure in this section.

(3) Remove timing belt rear cover. Refer to procedure in this section.

(4) Remove oil pan. Refer to procedure in this section.

(5) Remove crankshaft sprocket using Special Tools 6793 and C-4685-C2 (Fig. 145).

(6) Remove crankshaft key (Fig. 146).

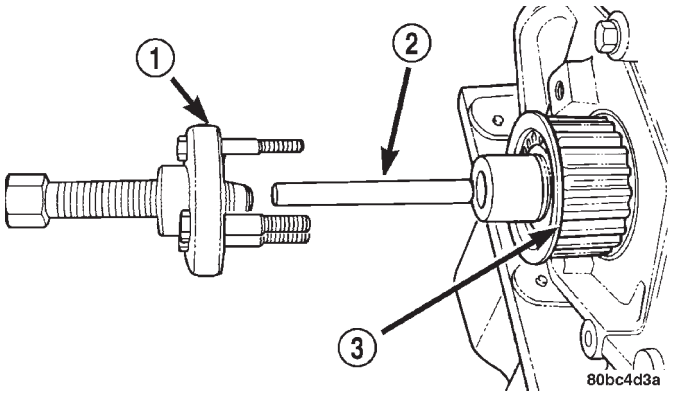

Fig. 145 Crankshaft Sprocket—Removal

1 – SPECIAL TOOL 6793
2 – SPECIAL TOOL C-4685–C2
3 – CRANKSHAFT SPROCKET

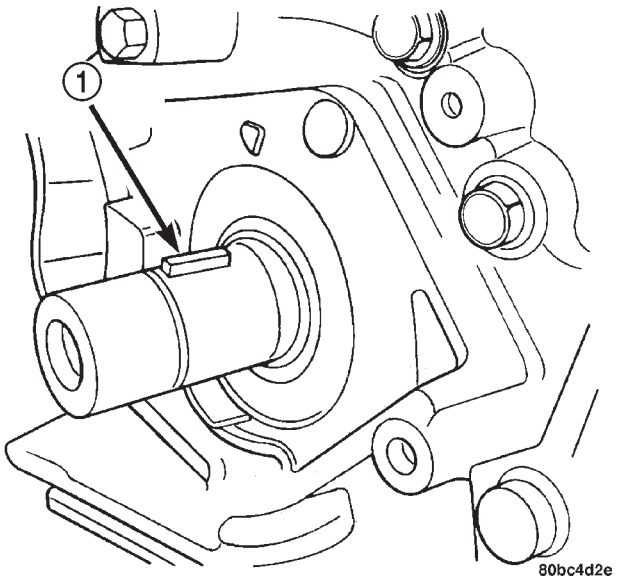

Fig. 146 Crankshaft Key

1 – CRANKSHAFT KEY

(7) Remove oil pick-up tube.

(8) Remove oil pump (Fig. 147) and front crankshaft seal.

INSTALLATION

(1) Make sure all surfaces are clean and free of oil and dirt.

(2) Apply Mopar® Gasket Maker to oil pump as shown in (Fig. 148). Install O-ring into oil pump body discharge passage.

(3) Prime oil pump with engine oil before installation.

(4) Align oil pump rotor flats with flats on crankshaft. Install the oil pump to the block (Fig. 147).

REMOVAL AND INSTALLATION (Continued)

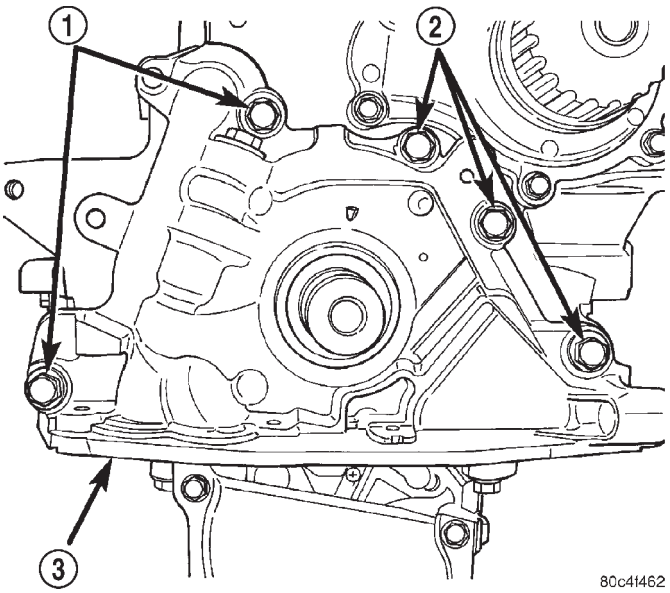

Fig. 147 Oil Pump

1 – BOLTS
2 – BOLTS
3 – OIL PUMP

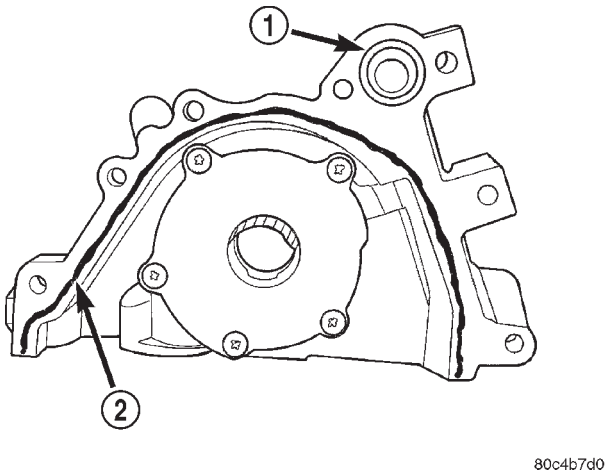

Fig. 148 Oil Pump Sealing

1 – O-RING
2 – SEALER LOCATION

CAUTION: To align, the front crankshaft seal MUST be out of pump, or damage may result.

(5) Install new front crankshaft seal using Special Tool 6780 (Fig. 149).

(6) Install crankshaft key (Fig. 146).

(7) Install crankshaft sprocket using Special Tool 6792 (Fig. 150).

(8) Install oil pump pick-up tube.

(9) Install oil pan. Refer to procedure in this section.

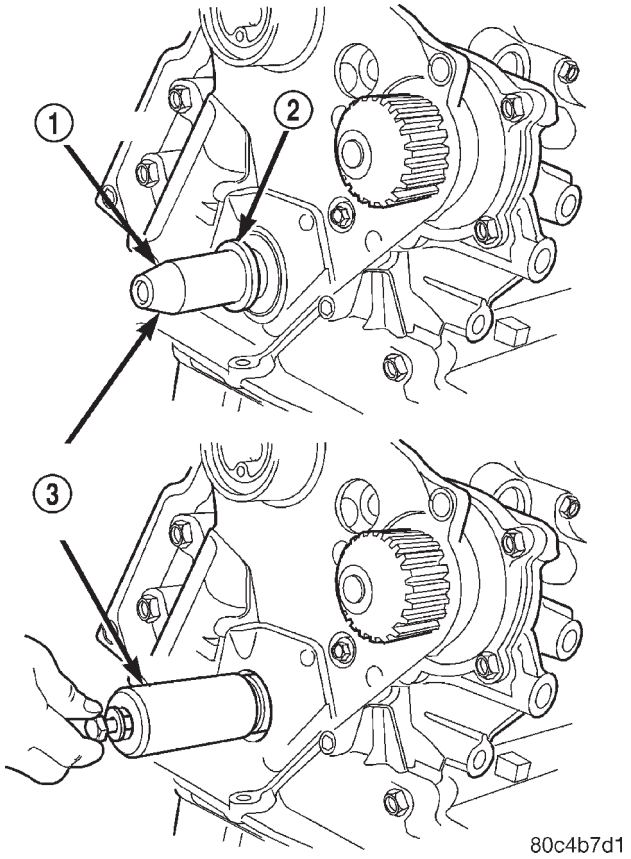

Fig. 149 Front Crankshaft Seal—Installation

1 – PROTECTOR
2 – SEAL
3 – SPECIAL TOOL 6780

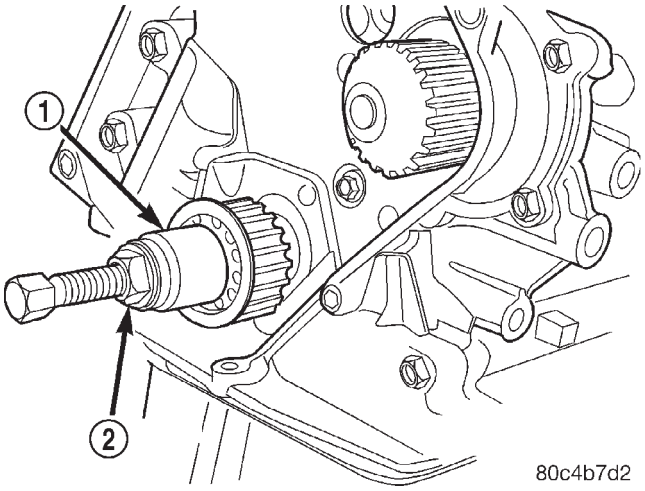

Fig. 150 Crankshaft Sprocket—Installation

1 – SPECIAL TOOL 6792
2 – TIGHTEN NUT TO INSTALL

(10) Install timing belt rear cover. Refer to procedure in this section.

REMOVAL AND INSTALLATION (Continued)

(11) Install timing belt. Refer to procedure in this section.

OIL FILTER

REMOVAL

CAUTION: When servicing the oil filter avoid deforming the filter can by installing the remove/install tool band strap against the can to base lock seam. The lock seam joining the can to the base is reinforced by the base plate.

(1) Using a suitable filter wrench, turn oil filter (Fig. 151) counterclockwise to remove.

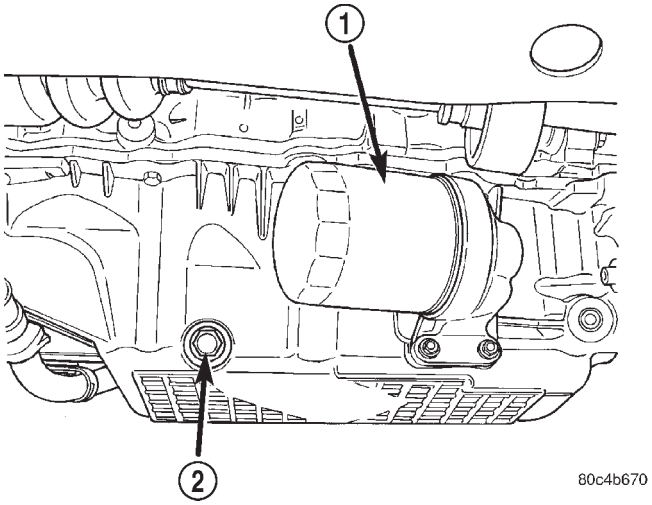

Fig. 151 Oil Filter

1 – OIL FILTER
2 – DRAIN PLUG

INSTALLATION

(1) Clean and check filter mounting surface. The surface must be smooth, flat and free of debris or pieces of gasket.

(2) Lubricate new oil filter gasket.

(3) Screw oil filter (Fig. 151) on until the gasket contacts base. Tighten to 21 N·m (15 ft. lbs.).

OIL FILTER ADAPTER

REMOVAL

(1) Raise vehicle on hoist.

(2) Remove oil filter. Refer to procedure in this section.

(3) Remove filter adapter attaching bolts (Fig. 152).

(4) Remove filter adapter and gasket (Fig. 152).

INSTALLATION

(1) Clean all gasket sealing surfaces

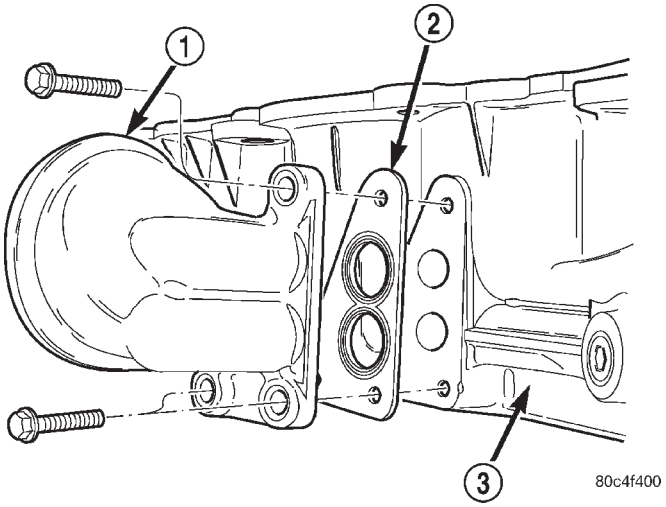

Fig. 152 Oil Filter Adaptor

1 – OIL FILTER ADAPTER
2 – GASKET
3 – OIL PAN

(2) Install gasket and filter adaptor to oil pan (Fig. 152). Tighten bolts to 12 N·m (105 in. lbs.).

(3) Install oil filter. Refer to procedure in this section.

(4) Lower vehicle and check engine oil level. Adjust level as necessary.

OIL PRESSURE SWITCH

REMOVAL

(1) Raise vehicle.

(2) Position oil collecting container under pressure switch location.

(3) Disconnect oil pressure switch electrical connector and remove switch (Fig. 153).

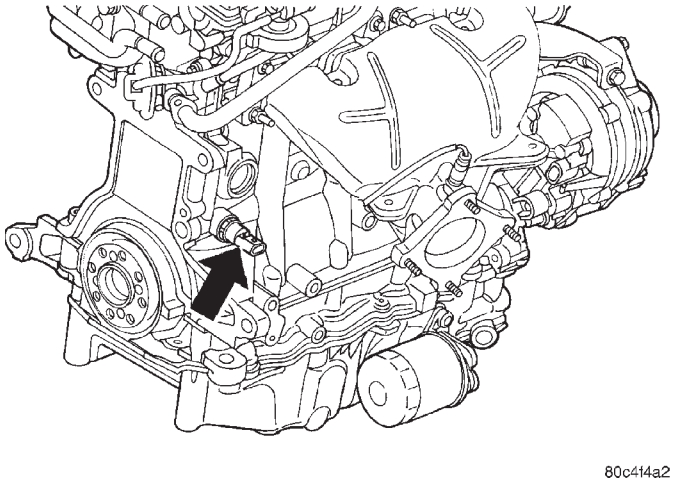

Fig. 153 Engine Oil Pressure Switch

REMOVAL AND INSTALLATION (Continued)

INSTALLATION

(1) Install oil pressure switch and connect electrical connector (Fig. 153).

(2) Lower vehicle.

(3) Start engine and allow to run a minimum of 2 minutes.

(4) Shut engine off and check engine oil level. Adjust level as necessary.

ENGINE CORE PLUGS

REMOVAL

Using a blunt tool such as a drift or a screwdriver and a hammer, strike the bottom edge of the cup plug (Fig. 154). With the cup plug rotated, grasp firmly with pliers or other suitable tool and remove plug (Fig. 154).

CAUTION: Do not drive cup plug into the casting as restricted cooling can result and cause serious engine problems.

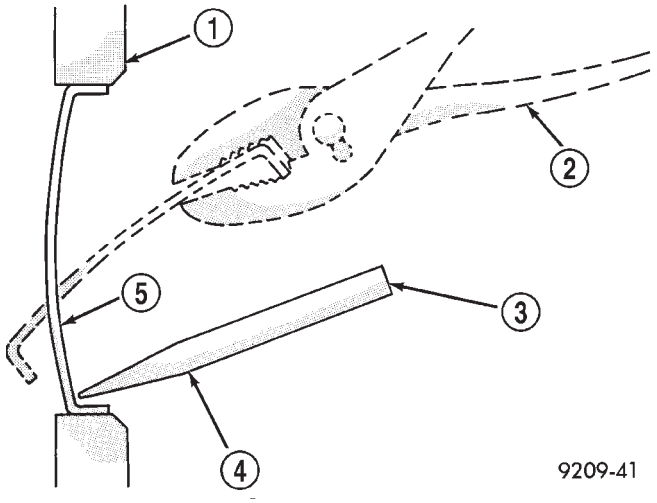

Fig. 154 Core Hole Plug Removal

1 – CYLINDER BLOCK
2 – REMOVE PLUG WITH PLIERS
3 – STRIKE HERE WITH HAMMER
4 – DRIFT PUNCH
5 – CUP PLUG

INSTALLATION

Thoroughly clean all debris/rust from inside of cup plug hole in cylinder block or head. Be sure to remove old sealer. Lightly coat inside of cup plug hole with Mopar® Stud and Bearing Mount Adhesive. Make certain the new plug is cleaned of all oil or grease. Using a proper driver, drive plug into hole so that the sharp edge of the plug is at least 0.5 mm (0.020 inch.) inside the lead in chamfer (Fig. 154).

It is not necessary to wait for curing of the sealant. The cooling system can be refilled and the vehicle placed in service immediately.

DISASSEMBLY AND ASSEMBLY

OIL PUMP

DISASSEMBLY

(1) To remove the relief valve, proceed as follows:

(a) Remove the threaded plug and gasket from the oil pump (Fig. 155).

(b) Remove spring and relief valve (Fig. 155).

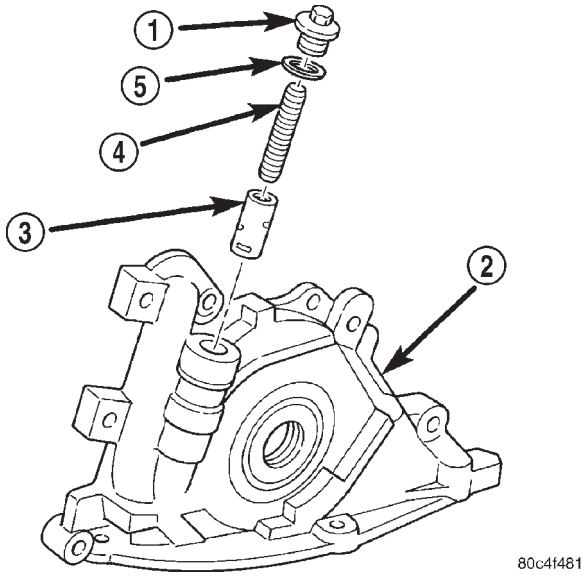

Fig. 155 Oil Pressure Relief Valve

1 – PLUG
2 – OIL PUMP BODY
3 – RELIEF VALVE
4 – SPRING
5 – SEAL

(2) Remove oil pump cover fasteners, and lift off cover (Fig. 156).

(3) Remove pump rotors (Fig. 156).

(4) Wash all parts in a suitable solvent and inspect carefully for damage or wear.

ASSEMBLY

(1) Assemble pump, using new parts as required. **Install the inner rotor with chamfer facing the cast iron oil pump cover.**

(2) Prime oil pump before installation by filling rotor cavity with engine oil.

(3) Install cover and tighten fasteners to 12 N·m (105 in. lbs.) (Fig. 156).

DISASSEMBLY AND ASSEMBLY (Continued)

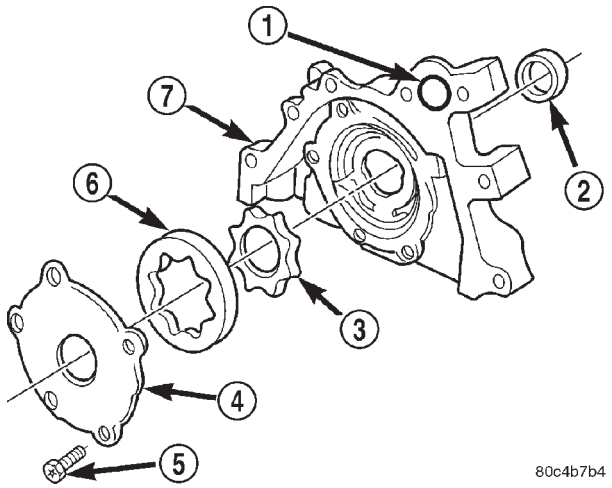

Fig. 156 Oil Pump

1 – O-RING
2 – SEAL
3 – INNER ROTOR
4 – OIL PUMP COVER
5 – FASTENER
6 – OUTER ROTOR
7 – OIL PUMP BODY

CAUTION: Oil pump pressure relief valve must be installed as shown in (Fig. 155) or serious damage may occur.

(4) Install relief valve, spring, gasket and cap as shown in (Fig. 155). Tighten cap to 41 N·m (30 ft. lbs.).

CLEANING AND INSPECTION

INTAKE MANIFOLD

(1) Discard gasket and clean all surfaces of manifold to cylinder head surfaces.

(2) Check manifold surfaces for flatness with straight edge. Surface must be flat within 0.15 mm per 300 mm (0.006 in. per foot) of manifold length.

(3) Inspect manifold for cracks or distortion. Replace manifold if necessary.

EXHAUST MANIFOLD

CLEANING

(1) Discard gasket and clean all surfaces of manifolds and cylinder head.

INSPECTION

(1) Inspect manifold gasket surfaces for flatness with straight edge. Surface must be flat within 0.15 mm per 300 mm (0.006 in. per foot) of manifold length.

(2) Inspect manifolds for cracks or distortion. Replace manifold as necessary.

CYLINDER HEAD

CLEANING

Remove all gasket material from cylinder head and block. Be careful not to gouge or scratch the aluminum head sealing surface.

Clean all engine oil passages.

To ensure engine gasket sealing, proper surface preparation must be performed, especially with the use of aluminum engine components and multi-layer steel cylinder head gaskets.

NOTE: Multi-Layer Steel (MLS) head gaskets require a scratch free sealing surface.

Use only the following for cleaning gasket surfaces:

- Solvent or a commercially available gasket remover
- Plastic or wood scraper (Fig. 157)
- Drill motor with 3M Roloc™ Bristle Disc (white or yellow) (Fig. 157)

CAUTION: Excessive pressure or high RPM can damage the sealing surfaces. The mild (white, 120 grit) bristle disc is recommended. If necessary, the medium (yellow, 80 grit) bristle disc may be used on cast iron surfaces with care.

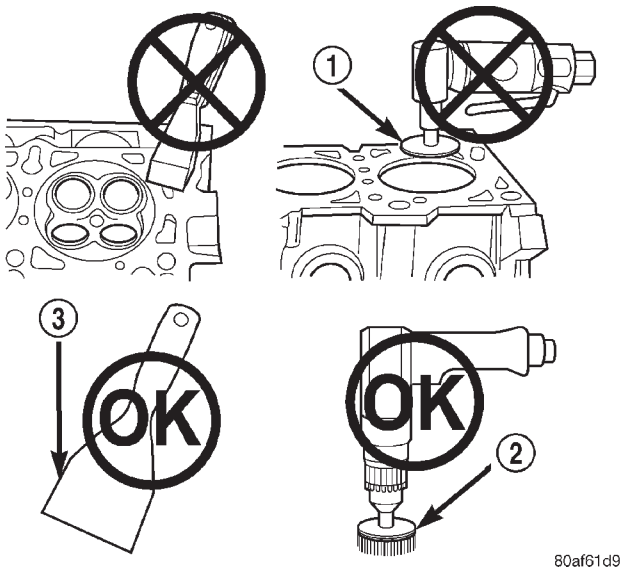

Fig. 157 Proper Tool Usage For Surface Preparation

1 – ABRASIVE PAD
2 – 3M ROLOC™ BRISTLE DISC
3 – PLASTIC/WOOD SCRAPER

CLEANING AND INSPECTION (Continued)

INSPECTION

(1) Cylinder head must be flat within 0.1 mm (0.004 in.) (Fig. 158).

(2) Inspect camshaft bearing journals for scoring.

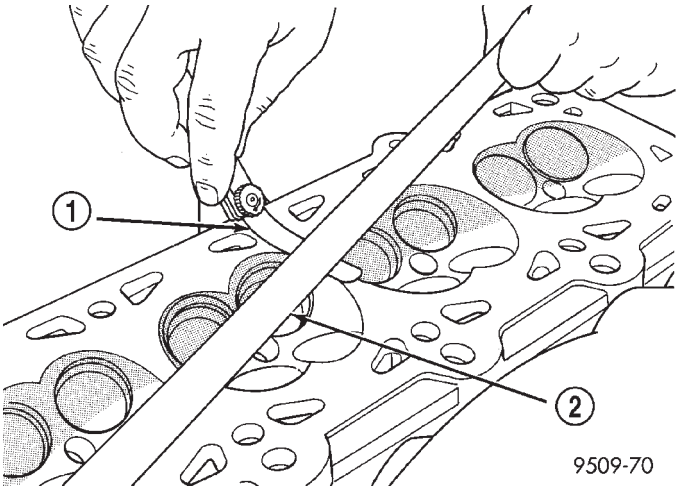

Fig. 158 Checking Cylinder Head Flatness

1 – FEELER GAUGE
2 – STRAIGHT EDGE

VALVE GUIDES

(1) Remove carbon and varnish deposits from inside of valve guides with a reliable guide cleaner.

(2) Using a small hole gauge and a micrometer, measure valve guides in 3 places top, middle and bottom (Fig. 159). Refer to Engine Specifications. Replace guides if they are not within specification.

(3) Check valve guide height (Fig. 160).

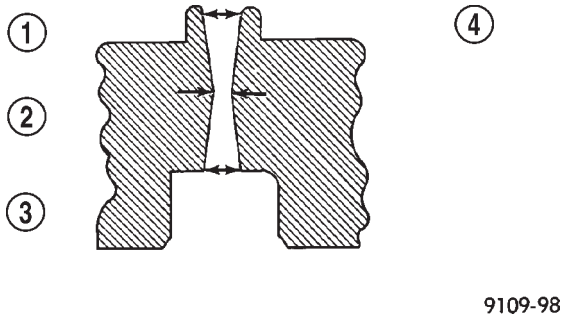

Fig. 159 Checking Wear on Valve Guide—Typical

1 – TOP
2 – MIDDLE
3 – BOTTOM
4 – CUT AWAY VIEW OF VALVE GUIDE MEASUREMENT LOCATIONS

VALVE AND VALVE SPRING

VALVES

(1) Clean valves thoroughly and discard burned, warped and cracked valves.

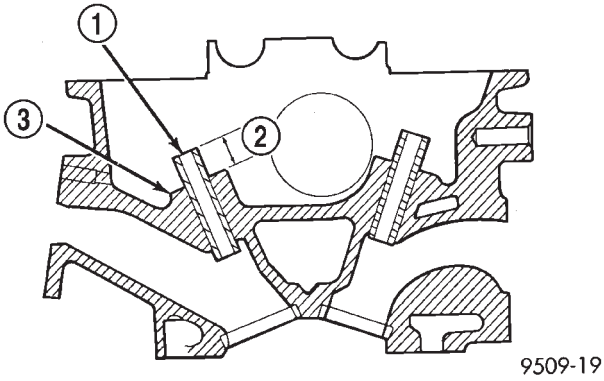

Fig. 160 Valve Guide Height

1 – VALVE GUIDE
2 – 13.25 - 13.75 MM (.521 -.541 IN.)
3 – SPRING SEAT

(2) Measure valve stems for wear. Measure stem about 60 mm beneath the valve lock grooves.

(3) If valve stems are worn more than 0.05 mm (0.002 in.), replace the valve.

VALVE SPRINGS

(1) Whenever valves have been removed for inspection, reconditioning or replacement, valve springs should be tested for correct tension. Discard the springs that do not meet specifications. The following specifications apply to both intake and exhaust valves springs:

- Valve Closed Nominal Tension—76 lbs. @ 38.0 mm (1.50 in.)
- Valve Open Nominal Tension—136 lbs. @ 29.75 mm (1.17 in.)

(2) Inspect each valve spring for squareness with a steel square and surface plate, test springs from both ends. If the spring is more than 1.5 mm (1/16 inch) out of square, install a new spring.

OIL PUMP

CLEANING

Clean all parts thoroughly.

INSPECTION

(1) Inspect the mating surface of the oil pump. Surface should be smooth (Fig. 161). Replace pump cover if scratched or grooved.

(2) Lay a straightedge across the pump cover surface (Fig. 162). If a 0.025 mm (0.001 in.) feeler gauge can be inserted between cover and straight edge, cover should be replaced.

CLEANING AND INSPECTION (Continued)

(3) Measure thickness and diameter of outer rotor. If outer rotor thickness measures 9.40 mm (0.370 in.) or less (Fig. 163), or if the diameter is 79.95 mm (3.148 in.) or less, replace outer rotor.

(4) If inner rotor measures 9.40 mm (0.370 in.) or less replace inner rotor (Fig. 164).

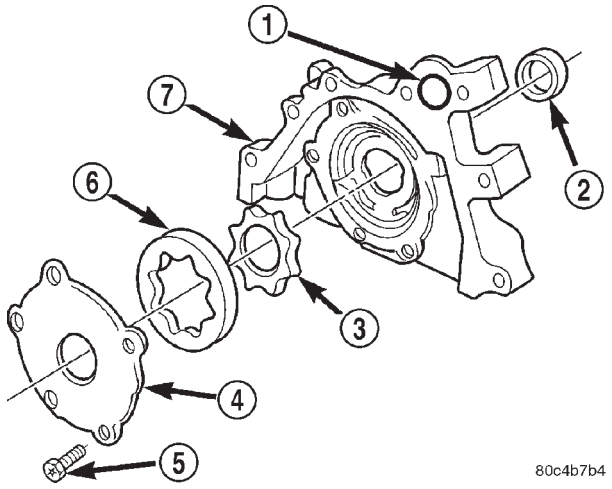

Fig. 161 Oil Pump

1 – O-RING
2 – SEAL
3 – INNER ROTOR
4 – OIL PUMP COVER
5 – FASTENER
6 – OUTER ROTOR
7 – OIL PUMP BODY

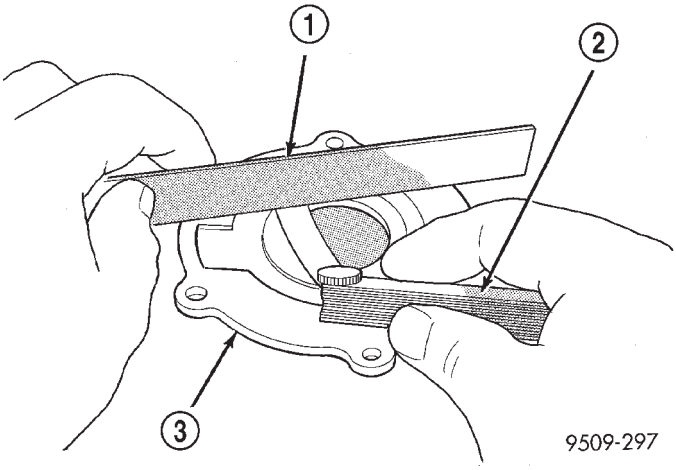

Fig. 162 Checking Oil Pump Cover Flatness

1 – STRAIGHT EDGE
2 – FEELER GAUGE
3 – OIL PUMP COVER

(1) Slide outer rotor into pump housing, press to one side with fingers and measure clearance between rotor and housing (Fig. 165). If measurement is 0.39 mm (0.015 in.) or more, replace housing only if outer rotor is in specification.

(2) Install inner rotor into pump housing. If clearance between inner and outer rotors (Fig. 166) is 0.203 mm (0.008 in.) or more, replace both rotors.

(3) Place a straightedge across the face of the pump housing, between bolt holes. If a feeler gauge of 0.102 mm (0.004 in.), or more can be inserted between rotors and the straightedge, replace pump assembly (Fig. 167), **ONLY** if rotors are in specifications.

(4) Inspect oil pressure relief valve plunger for scoring and free operation in its bore. Small marks may be removed with 400 grit wet or dry sandpaper.

(5) The relief valve spring has a free length of approximately 60.7 mm (2.39 inches) it should test between 18 and 19 pounds when compressed to 40.5 mm (1.60 inches). Replace spring that fails to meet specifications.

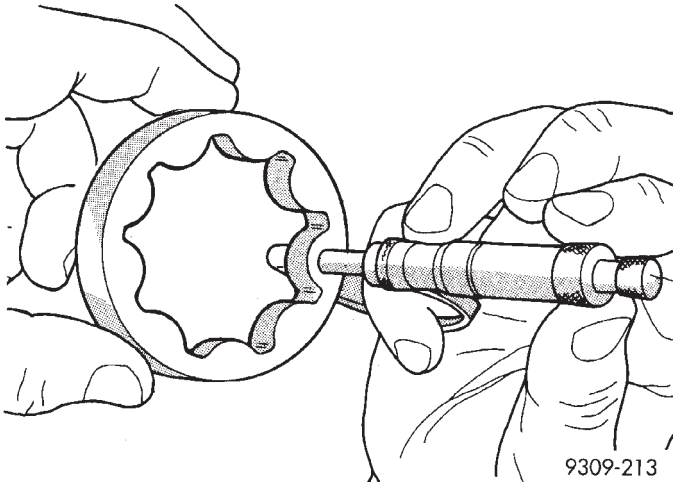

Fig. 163 Measuring Outer Rotor Thickness

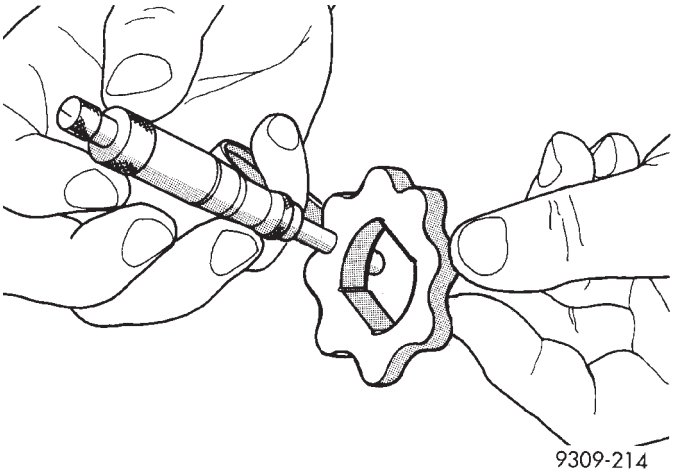

Fig. 164 Measuring Inner Rotor Thickness

(6) If oil pressure is low and pump is within specifications, inspect for worn engine bearings or other reasons for oil pressure loss.

CLEANING AND INSPECTION (Continued)

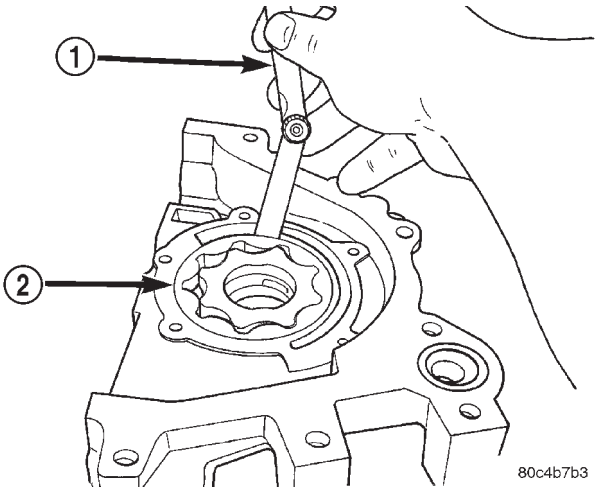

Fig. 165 Measuring Outer Rotor Clearance in Housing

1 – FEELER GAUGE
2 – OUTER ROTOR

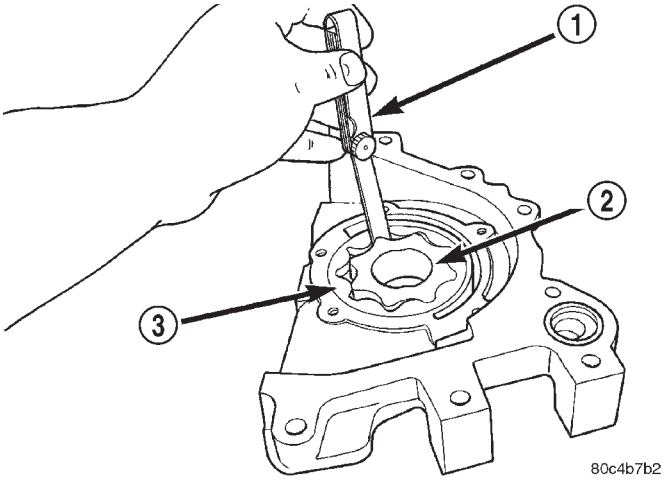

Fig. 166 Measuring Clearance Between Rotors

1 – FEELER GAUGE
2 – INNER ROTOR
3 – OUTER ROTOR

CRANKSHAFT

The crankshaft journals should be checked for excessive wear, taper and scoring (Fig. 168). Limits of taper or out of round on any crankshaft journals should be held to.025 mm (.001 inch). Journal grinding should not exceed.305 mm (.012 inch) under the standard journal diameter. DO NOT grind thrust faces of Number 3 main bearing. DO NOT nick crank pin or bearing fillets. After grinding, remove rough edges from crankshaft oil holes and clean out all passages.

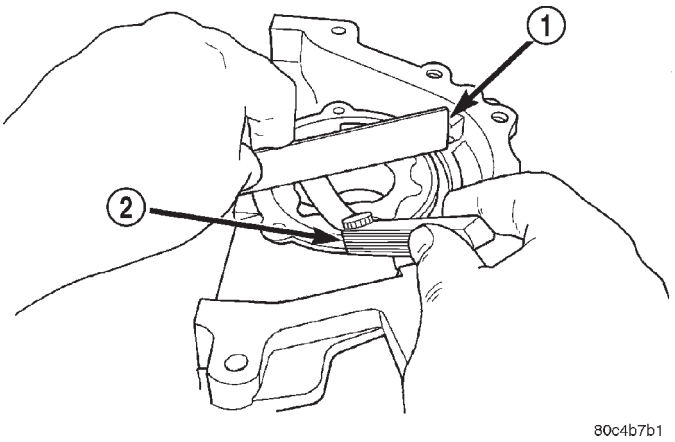

Fig. 167 Measuring Clearance Over Rotors

1 – STRAIGHT EDGE
2 – FEELER GAUGE

CAUTION: With the nodular cast iron crankshafts used it is important that the final paper or cloth polish after any journal regrind be in the same direction as normal rotation in the engine.

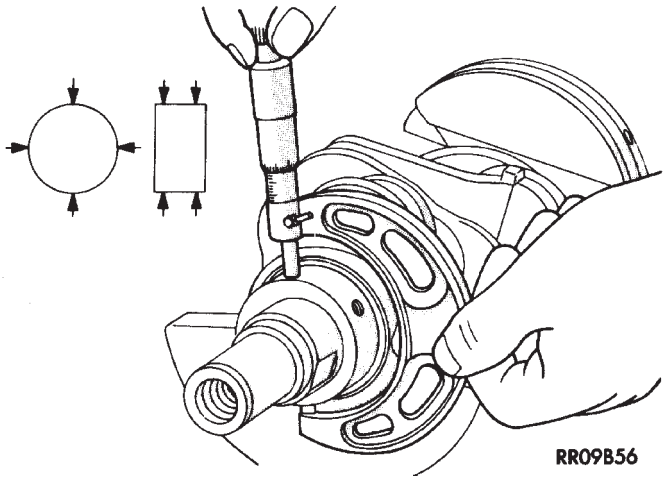

Fig. 168 Crankshaft Journal Measurements

CLEANING AND INSPECTION (Continued)

CYLINDER BLOCK

CLEANING

Clean cylinder block thoroughly.

INSPECTION

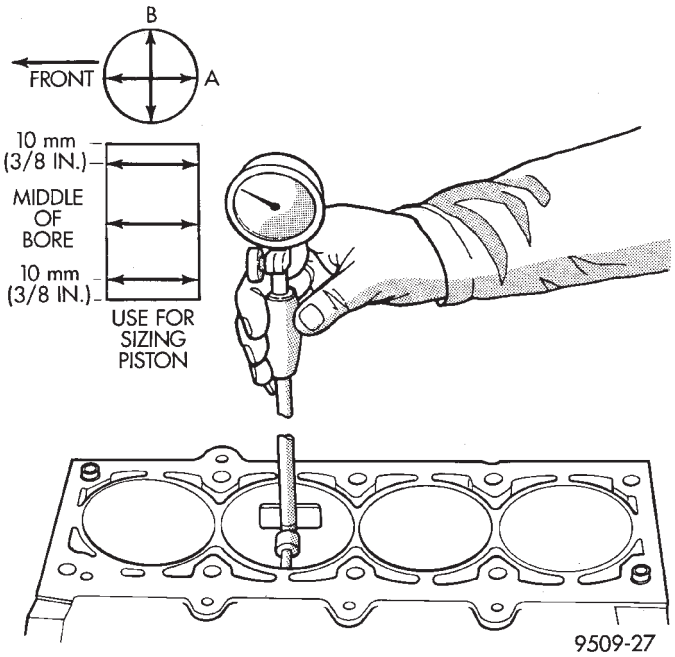

Fig. 169 Checking Cylinder Bore Size

Inspect all core hole plugs for evidence of leaking and replace as necessary. Examine block and cylinder bores for cracks or fractures.

The cylinder walls should be checked for out-of-round and taper with Tool C119 (Fig. 169). The cylinder bore out-of-round is 0.050 mm (0.002 in.) maximum and cylinder bore taper is 0.051 mm (0.002 in.) maximum. If the cylinder walls are badly scuffed or scored, the cylinder block should be replaced, and new pistons and rings fitted.

Measure the cylinder bore at three levels in directions A and B (Fig. 169). Top measurement should be 10 mm (3/8 in.) down and bottom measurement should be 10 mm (3/8 in.) up from bottom of bore. Refer to Engine Specifications.

CAMSHAFT FOLLOWER

Inspect the cam follower assembly for wear or damage (Fig. 170). Replace as necessary.

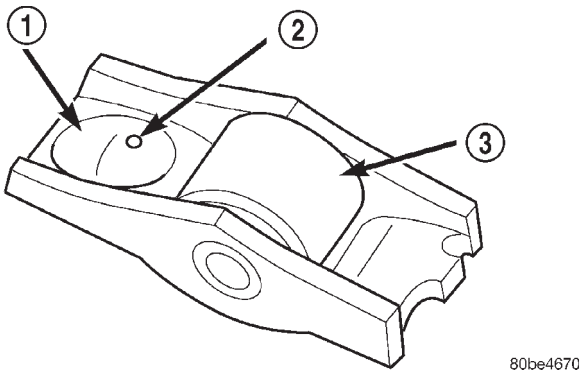

Fig. 170 Cam Follower Assembly

1 – LASH ADJUSTER POCKET
2 – OIL SQUIRT HOLE
3 – ROLLER

ADJUSTMENTS

ENGINE TORQUE STRUT ADJUSTMENT

The upper and lower torque struts need to be adjusted together to assure proper engine mount load balance and engine positioning. Whenever a torque strut bolt(s) is loosened the following procedure must be performed.

(1) Remove right side splash shield.

(2) Remove pencil strut (Fig. 172).

(3) Loosen the upper and lower torque strut attaching bolt at the suspension crossmember and shock tower bracket (Fig. 171).

(4) The engine position may now be adjusted by positioning a suitable floor jack on the forward edge of the transmission bell housing (Fig. 173).

NOTE: The floor jack must be positioned as shown in (Fig. 173) to prevent minimal upward lifting of the engine.

(5) Carefully apply upward force, allowing the upper engine to rotate rearward until the distance between the center of the rearmost attaching bolt on the engine mount bracket (point “A”) and the center of the hole on the shock tower bracket (point “B”) is 119 mm (4.70 in.) (Fig. 174).

CAUTION: The engine must be held in position with jack until both the upper and lower torque strut bolts are tightened.

(6) With the engine held at the proper position, tighten both the upper and lower torque strut bolts to 118 N·m (87 ft. lbs.) (Fig. 171).

(7) Remove the floor jack.

(8) Install pencil strut and tighten nuts to 58 N·m (43 ft. lbs.) (Fig. 172).

(9) Install right side splash shield.

ADJUSTMENTS (Continued)

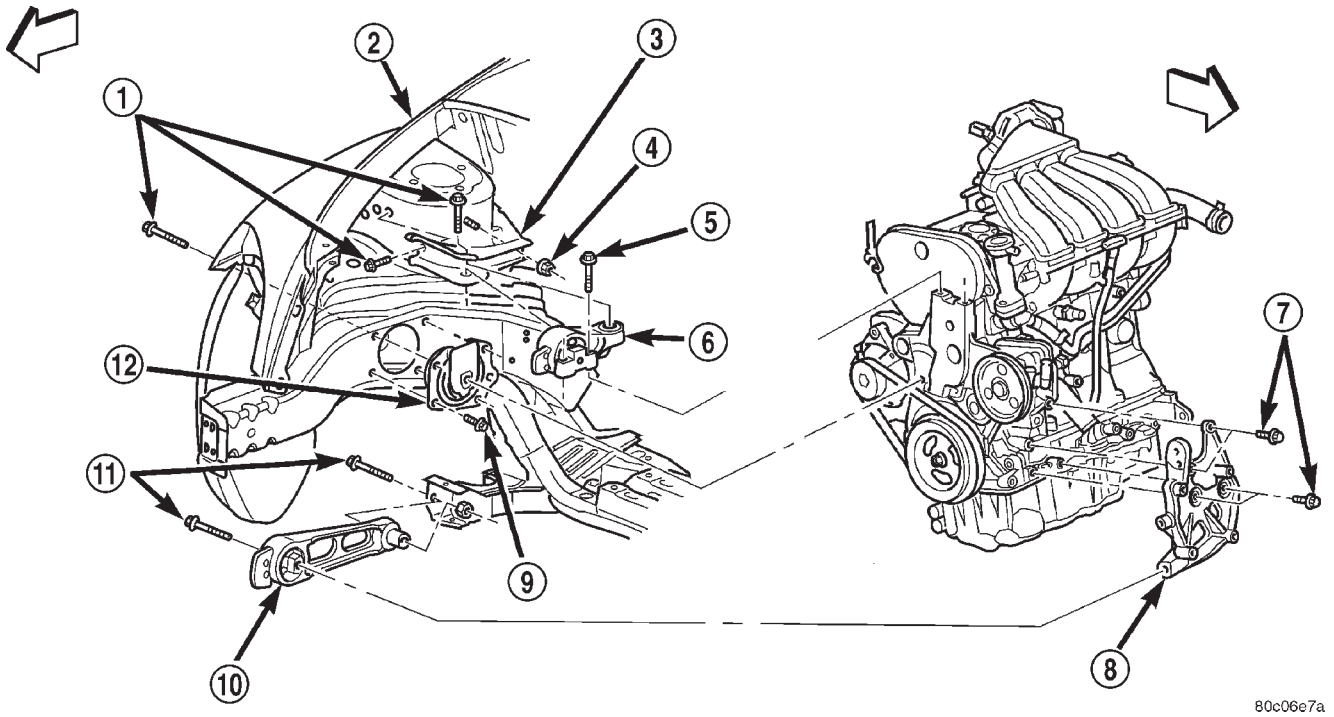

Fig. 171 Torque Strut Bolts

1 – BOLT
2 – RIGHT FENDER
3 – UPPER TORQUE STRUT BRACKET
4 – NUT
5 – BOLT
6 – UPPER TORQUE STRUT
7 – BOLT
8 – LOWER TORQUE STRUT BRACKET
9 – BOLT
10 – LOWER TORQUE STRUT
11 – BOLT
12 – RIGHT ENGINE MOUNT

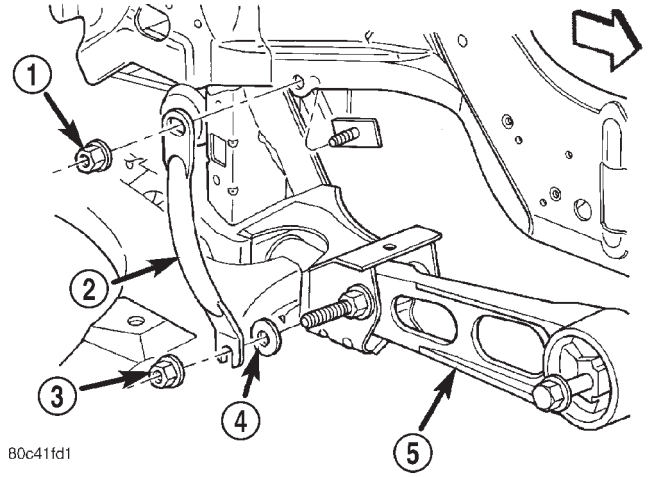

Fig. 172 Pencil Strut

1 – NUT
2 – PENCIL STRUT
3 – NUT
4 – FLAT WASHER
5 – LOWER TORQUE STRUT

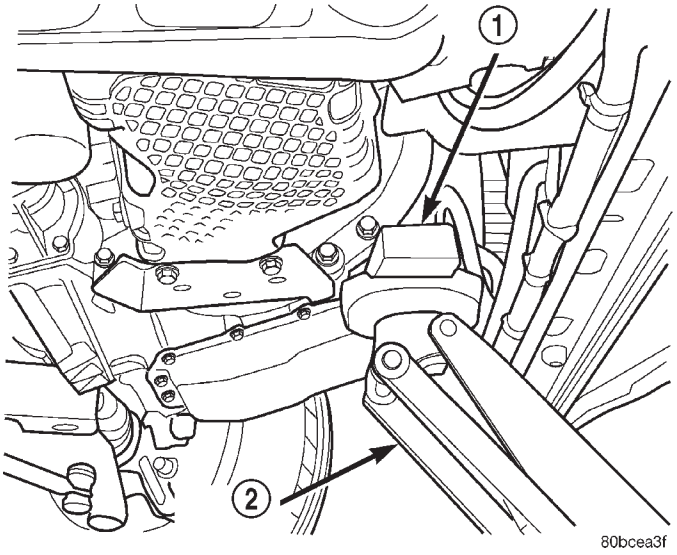

Fig. 173 Floor Jack Positioning

1 – WOOD BLOCK
2 – FLOOR JACK

ADJUSTMENTS (Continued)

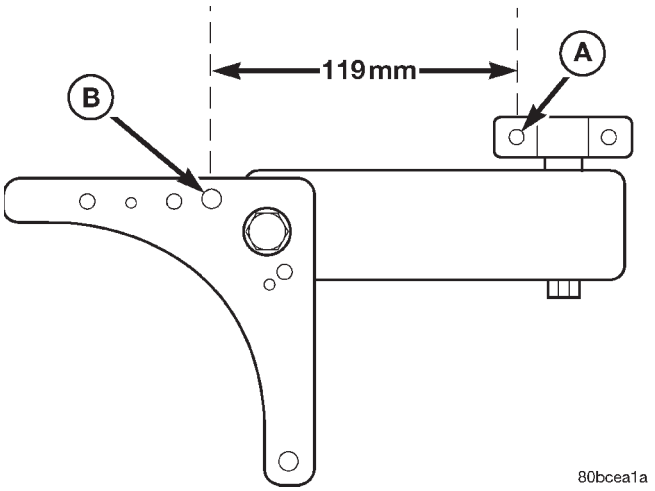

Fig. 174 Engine Position Measurement

SPECIFICATIONS

ENGINE OIL

WARNING: NEW OR USED ENGINE OIL CAN BE IRRITATING TO THE SKIN. AVOID PROLONGED OR REPEATED SKIN CONTACT WITH ENGINE OIL. CONTAMINANTS IN USED ENGINE OIL, CAUSED BY INTERNAL COMBUSTION, CAN BE HAZARDOUS TO YOUR HEALTH. THOROUGHLY WASH EXPOSED SKIN WITH SOAP AND WATER. DO NOT WASH SKIN WITH GASOLINE, DIESEL FUEL, THINNER, OR SOLVENTS, HEALTH PROBLEMS CAN RESULT. DO NOT POLLUTE, DISPOSE OF USED ENGINE OIL PROPERLY. CONTACT YOUR DEALER OR GOVERNMENT AGENCY FOR LOCATION OF COLLECTION CENTER IN YOUR AREA.

API SERVICE GRADE CERTIFIED

Use an engine oil that is API Service Grade Certified. MOPAR® provides engine oils that conform to this service grade.

CONTAINER IDENTIFICATION

Standard engine oil identification notations have been adopted to aid in the proper selection of engine oil. The identifying notations are located on the label of engine oil plastic bottles and the top of engine oil cans (Fig. 175).

ENERGY CONSERVING OIL

An Energy Conserving type oil is recommended for gasoline engines. The designation of ENERGY CONSERVING is located on the label of an engine oil container.

Fig. 175 Engine Oil Container Standard Notations

SAE VISCOSITY

An SAE viscosity grade is used to specify the viscosity of engine oil. Use only engine oils with multiple viscosities such as 5W-30 or 10W-30. These are specified with a dual SAE viscosity grade which indicates the cold-to-hot temperature viscosity range. Select an engine oil that is best suited to your particular temperature range and variation (Fig. 176).

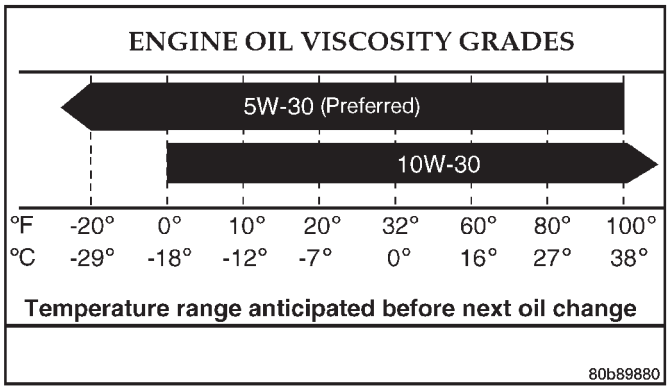

Fig. 176 Temperature/Engine Oil Viscosity

2.4L ENGINE

DESCRIPTION	SPECIFICATION
General Specification	
Type	In-Line OHV, DOHC
Number of Cylinders	4
Displacement	2.4 Liters (148 cu. in.)
Bore	87.5 mm (3.445 in.)
Stroke	101.0 mm (3.976 in.)
Compression Ratio	9.4:1
Firing Order	1-3-4-2
Compression Pressure	1172–1551 kPa (170–225 psi)

SPECIFICATIONS (Continued)

DESCRIPTION	SPECIFICATION
Max. Variation Between Cylinders	25%
Cylinder Block	
Cylinder Bore Diameter	87.4924–87.5076 mm (3.4446–3.4452 in.)
Out-of-Round (Max.)	0.051 mm (0.002 in.)
Taper (Max.)	0.051 mm (0.002 in.)
Pistons	
Piston Diameter	87.463–87.481 mm (3.4434–3.4441 in.)
Clearance @ 14 mm (9/16 in.) from bottom of skirt	0.024–0.057 mm (0.0009–0.0022 in.)
Weight	346–356 grams (12.20–12.56 oz.)
Land Clearance (Diametrical)	0.614–0.664 mm (0.024–0.026 in.)
Piston Length	66.25 mm (2.608 in.)
Piston Ring Groove Depth No. 1	4.640–4.784 mm (0.182–0.188 in.)
Piston Ring Groove Depth No. 2	4.575–4.719 mm (0.180–0.185 in.)
Piston Ring Groove Depth No. 3	4.097–4.236 mm (0.161–0.166 in.)
Piston Pins	
Clearance in Piston	0.005–0.018 mm (0.0002–0.0008 in.)
Clearance in Connecting Rod	Interference
Diameter	21.998–22.003 mm (0.8660–0.8662 in.)
End Play	None
Length	72.75–73.25 mm (2.864–2.883 in.)
Piston Rings	
Ring Gap—Top Compression Ring	0.25–0.51 mm (0.0098–0.020 in.)
Wear Limit	0.8 mm (0.031 in.)

DESCRIPTION	SPECIFICATION
Ring Gap—2nd Compression Ring	0.23–0.48 mm (0.009–0.018 in.)
Wear Limit	0.8 mm (0.031 in.)
Ring Gap—Oil Control Steel Rails	0.25–0.64 mm (0.0098–0.025 in.)
Wear Limit	1.0 mm (0.039 in.)
Ring Side Clearance—Compression Rings	0.030–0.080 mm (0.0011–0.0031 in.)
Wear Limit	0.10 mm (0.004 in.)
Ring Side Clearance—Oil Ring Pack	0.012–0.178 mm (0.0004–0.0070 in.)
Ring Width—Compression Rings	1.47–1.50 mm (0.057–0.059 in.)
Ring Width—Oil Ring Pack	2.72–2.88 mm (0.107–0.1133 in.)
Connecting Rod	
Bearing Clearance	0.025–0.071 mm (0.0009–0.0027 in.)
Wear Limit	0.075 mm (0.003 in.)
Bore Diameter—Piston Pin	20.96–20.98 mm (0.8252–0.8260 in.)
Bore Diameter—Crankshaft End	53.007–52.993 mm (2.0868–2.0863 in.)
Side Clearance	0.13–0.38 mm (0.005–0.015 in.)
Wear Limit	0.40 mm (0.016 in.)
Weight—Total (Less Bearing)	565.8 grams (19.96 oz.)
Crankshaft	
Connecting Rod Journal Diameter	49.984–50.000 mm (1.968–1.9685 in.)
Main Bearing Journal Diameter	59.992–60.008 mm (2.362–2.3625 in.)
Journal Out-of-Round (Max.)	0.0035 mm (0.0001 in.)
Journal Taper (Max.)	0.0038 mm (0.0001 in.)

SPECIFICATIONS (Continued)

DESCRIPTION	SPECIFICATION
End Play	0.09–0.24 mm (0.0035–0.0094 in.)
Wear Limit	0.37 mm (0.015 in.)
Main Bearing Diametrical Clearance	0.018–0.058 mm (0.0007–0.0023 in.)
Hydraulic Lash Adjuster	
Body Diameter	15.901–15.913 mm (0.626–0.6264 in.)
Plunger Travel Minimum (Dry)	3.0 mm (0.118 in.)
Cylinder Head Camshaft Bearing Bore Diameter	
Journals No.1–6	26.020–26.041 mm (1.024–1.025 in.)
Camshaft	
Journal Diameter No. 1–6	25.951–25.970 mm (1.021–1.022 in.)
Bearing Clearance—Diametrical	0.069–0.071 mm (0.0027–0.003 in.)
End Play	0.05–0.17 mm (0.0019–0.0066 in.)
Lift (Zero Lash)	
Intake	8.25 mm (0.324 in.)
Exhaust	6.60 mm (0.259 in.)
Intake Valve Timing*	
Closes (ABDC)	44.3°
Opens (ATDC)	6.2°
Duration	218°
Exhaust Valve Timing*	
Closes (ATDC)	1°
Opens (BBDC)	40°
Duration	221°
Valve Overlap	5.4°
*All readings in crankshaft degrees, at 0.5 mm (0.019 in.) of valve lift.	
Cylinder Head	
Material	Cast Aluminum
Gasket Thickness (Compressed)	1.15 mm (0.045 in.)

DESCRIPTION	SPECIFICATION
Valve Seat	
Angle	44.5–45°
Seat Diameter—Intake	34.37–34.63 mm (1.353–1.363 in.)
Seat Diameter—Exhaust	27.06–27.32 mm (1.065–1.075 in.)
Runout (Max.)	0.05 mm (0.002 in.)
Valve Seat Width—Intake and Exhaust	0.9–1.3 mm (0.035–0.051 in.)
Service Limit—Intake	2.0 mm (0.079 in.)
Service Limit—Exhaust	2.5 mm (0.098 in.)
Valve Guide	
Diameter I.D.	5.975–6.000 mm (0.235–0.236 in.)
Guide Bore Diameter	11.0–11.02 mm (0.4330–0.4338 in.)
Guide Height (spring seat to guide tip)	13.25–13.75 mm (0.521–0.541 in.)
Valves	
Face Angle—Intake and Exhaust	44.5—45°
Head Diameter—Intake	34.67–34.93 mm 1.364–1.375 in.)
Head Diameter—Exhaust	28.32–28.52 mm (1.114–1.122 in.)
Valve Length (Overall)	
—Intake	112.76–113.32 mm (4.439–4.461 in.)
—Exhaust	110.89–111.69 mm (4.365–4.397 in.)
Valve Stem Diameter	
—Intake	5.934–5.952 mm (0.2337–0.2344 in.)
—Exhaust	5.906–5.924 mm (0.2326–0.2333 in.)
Valve Margin	
Intake	1.2–1.7 mm (0.047–0.066 in.)

SPECIFICATIONS (Continued)

DESCRIPTION	SPECIFICATION
Service Limit	0.95 mm (1/32 in.)
Exhaust	0.985–1.315 mm (0.038–0.051 in.)
Service Limit	1.05 mm (3/64 in.)
Valve Stem Tip Height	
Intake	48.04 mm (1.891 in.)
Exhaust	47.99 mm (1.889 in.)
Valve Stem to Guide Clearance	
Intake	0.048–0.066 mm (0.0018–0.0025 in.)
Max. Allowable	0.076 mm (0.003 in.)
Service Limit	0.25 mm (0.010 in.)
Exhaust	0.0736–0.094 mm (0.0029–0.0037 in.)
Max. Allowable	0.101 mm (0.004 in.)
Service Limit	0.25 mm (0.010 in.)
Valve Springs	
Free Length (Approx.)	48.4 mm (1.905 in.)
Nominal Force (Valve Closed)	338 N @ 38.0 mm (75.98 lbs. @ 1.496 in.)
Nominal Force (Valve Open)	607 N @ 29.75 mm (136 lbs. @ 1.172 in.)
Installed Height	38.00 mm (1.496 in.)
Number of Coils	7.82
Wire Diameter	3.86 mm (1.496 in.)
Oil Pump	
Clearance Over Rotors (Max.)	0.10 mm (0.004 in.)
Cover Out-of-Flat (Max.)	0.025 mm (0.001 in.)
Inner Rotor Thickness (Min.)	9.40 mm (0.370 in.)
Outer Rotor Thickness (Min.)	9.40 mm (0.370 in.)
Outer Rotor Clearance (Max.)	0.039 mm (0.015 in.)
Outer Rotor Diameter (Min.)	79.95 mm (3.148 in.)
Tip Clearance Between Rotors (Max.)	0.20 mm (0.008 in.)
Oil Pressure	
At Curb Idle Speed*	25 kPa (4 psi)
At 3000 rpm	170–550 kPa (25–80 psi)
*If pressure is ZERO at curb idle, DO NOT run engine at 3000 rpm.	

TORQUE

DESCRIPTION	N·m	Ft. Lbs.	In. Lbs.
Balance Shaft Carrier to Block—Bolts	54	40	—
Balance Shaft Gear Cover—Double Ended Fastener	12	—	105
Balance Shaft Sprocket—Bolt	28	20	—
Balance Shaft Chain Tensioner—Bolts	12	—	105
Balance Shaft Carrier Cover—Bolts	12	—	105
Camshaft Sprocket—Bolt	101	75	—
Connecting Rod Cap—Bolts	27 +¼ turn	20 +¼ turn	—
Crankshaft Main Bearing Cap/Bedplate—Bolts	Refer to Procedure		
Crankshaft Damper—Bolt	136	100	—

2001 PT Service Manual
Publication No. 81-370-1111
TSB 26-10-01 October, 2001

SPECIFICATIONS (Continued)

DESCRIPTION	N·m	Ft. Lbs.	In. Lbs.
Cylinder Head—Bolts	Refer to Procedure		
Cylinder Head Cover—Bolts	12	—	105
Flex Plate to Crankshaft—Bolts	95	70	—
Engine Support Bracket—Bolts	61	45	—
Exhaust Manifold—Bolts	23	—	200
Exhaust Manifold Heat Shield—Bolts	12	—	105
Intake Manifold Upper—Bolts	12	—	105
Intake Manifold Lower—Bolts	12	—	105
Oil Filter	20	15	—
Oil Pan—Bolts	12	—	105
Oil Pan Drain—Plug	28	20	—
Oil Pump to Block—Bolts	28	20	—
Oil Pump Cover Plate—Bolts	12	—	105
Oil Pump Pick-up Tube—Bolt	28	20	—
Oil Pump Relief Valve—Cap	41	30	—
PCV Valve	8	—	70
Spark Plugs	18	13	—
Timing Belt Cover - Front Upper and Lower—Bolts	4.5	—	40
Timing Belt Cover - Rear—Bolts	12	—	105
Timing Belt Tensioner Assembly—Bolts	61	45	—

SPECIAL TOOLS

2.4L ENGINE

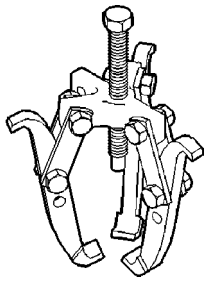

Puller 1026

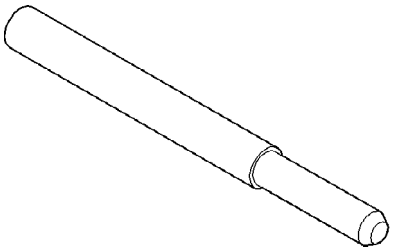

Crankshaft Damper Removal Insert 6827-A

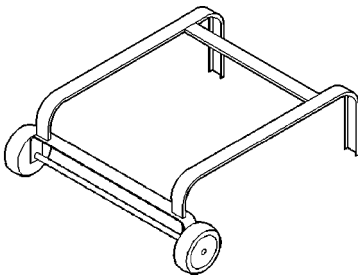

Dolly 6135

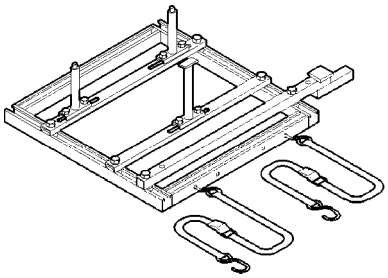

Cradle 6710

SPECIAL TOOLS (Continued)

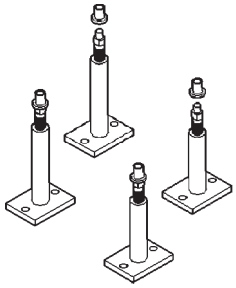

Post Kit Engine Cradle 6848

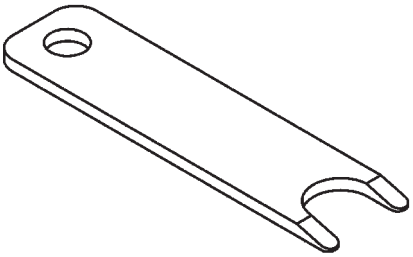

Clutch Line Disconnect 6638-A

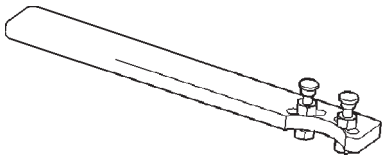

Camshaft Sprocket Holder 6847

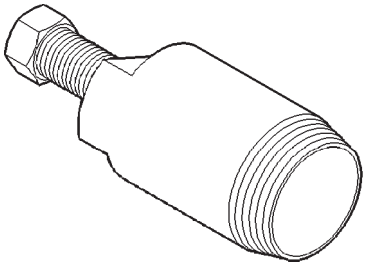

Camshaft Seal Remover C-4679-A

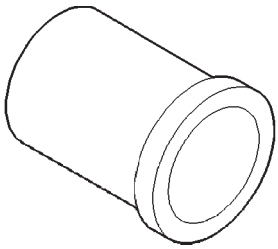

Camshaft Seal Installer MD-998306

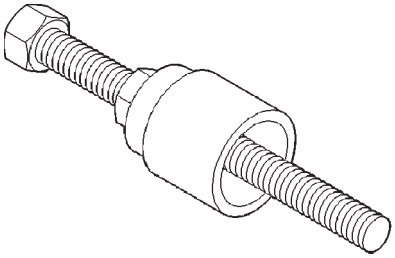

Crankshaft Damper Installer 6792

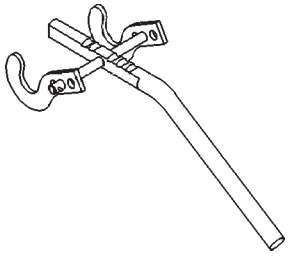

Valve Spring Compressor 8215

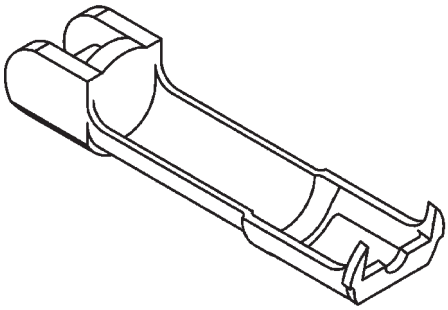

Adaptor 8436

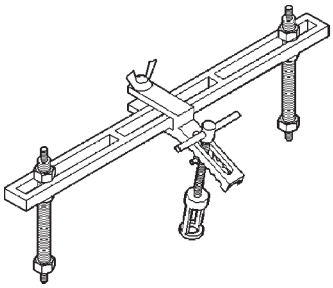

Valve Spring Compressor MD-998772-A

SPECIAL TOOLS (Continued)

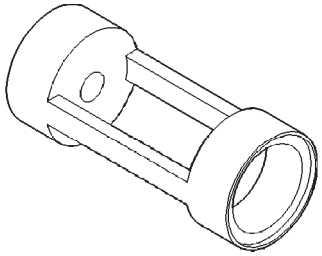

Valve Spring Compressor Adapter 6779

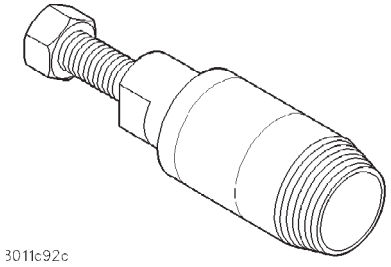

Crankshaft Front Seal Remover 6771

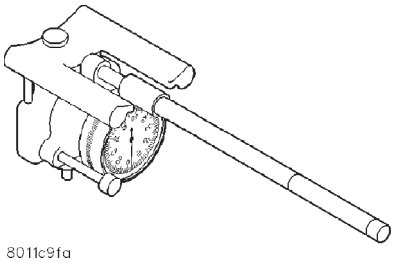

Cylinder Bore Gage C-119

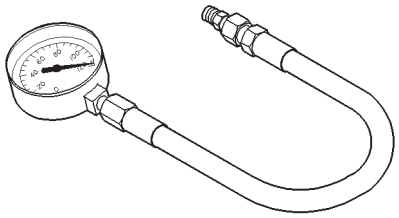

Oil Pressure Gage C-3292

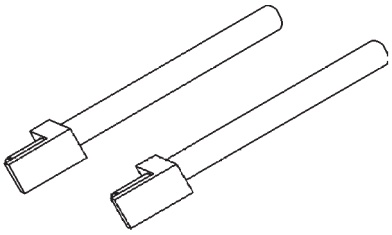

Connecting Rod Guides 8189

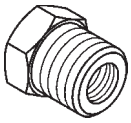

Adaptor 8406

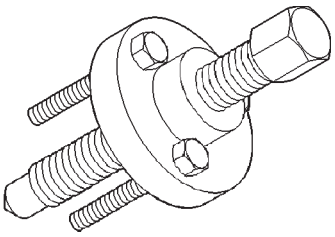

Crankshaft Sprocket Remover 6793

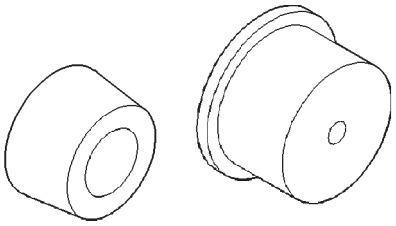

Rear Crankshaft Seal Guide and Installer 6926-1 and 6926-2

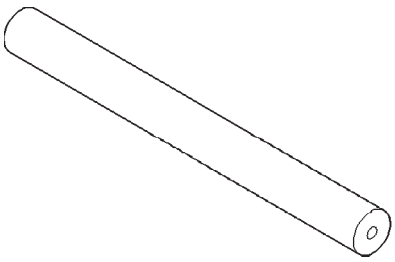

Crankshaft Sprocket Remover Insert C-4685-C2

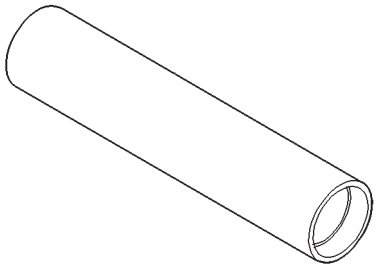

Balance Shaft Sprocket Installer 6052

SPECIAL TOOLS (Continued)

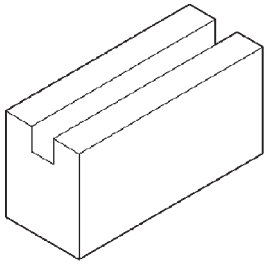

Post Adapter 8130

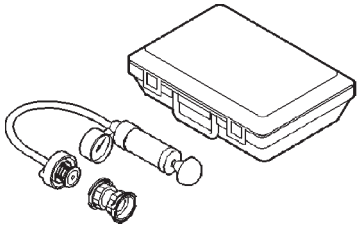

Cooling System Tester 7700

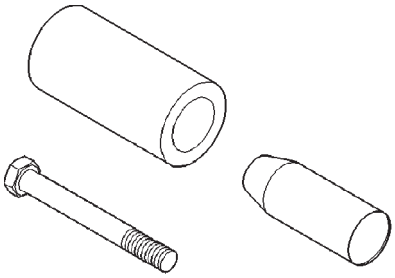

Front Crankshaft Oil Seal Installer 6780

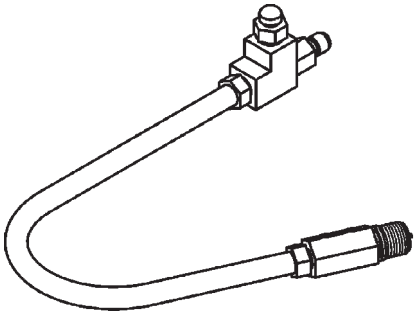

Cylinder Compression Pressure Adaptor 8116

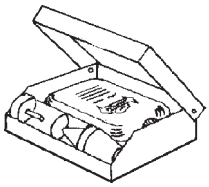

Combustion Leak Tester C-3685-A

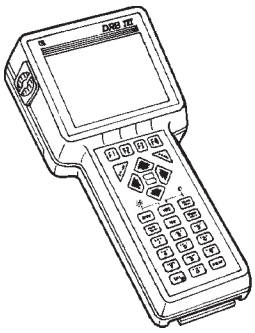

DRB III® with PEP Module OT-CH6010A

ENGINE

TABLE OF CONTENTS

page

2.0L DOHC ENGINE 1

2.0L DOHC ENGINE

TABLE OF CONTENTS

page

DESCRIPTION AND OPERATION
2.0L DOHC ENGINE. 2
CYLINDER BLOCK AND BEDPLATE 3
CRANKSHAFT 3
PISTON AND CONNECTING ROD 3
CYLINDER HEAD. 4
CAMSHAFT 4
VALVE AND VALVE SPRING 4
INTAKE MANIFOLD 4
EXHAUST MANIFOLD 5
ENGINE LUBRICATION 5
ENGINE MOUNT 7
DIAGNOSIS AND TESTING
ENGINE DIAGNOSIS—INTRODUCTION. 8
ENGINE DIAGNOSIS—PERFORMANCE 9
ENGINE DIAGNOSIS—MECHANICAL 10
HYDROSTATIC LOCKED ENGINE 12
INTAKE MANIFOLD LEAKAGE DIAGNOSIS 12
CYLINDER COMPRESSION PRESSURE TEST . . 12
CYLINDER COMBUSTION PRESSURE LEAKAGE TEST 13
CYLINDER HEAD GASKET FAILURE DIAGNOSIS 13
LASH ADJUSTER (TAPPET) NOISE DIAGNOSIS 14
ENGINE OIL LEAK INSPECTION 14
ENGINE OIL PRESSURE CHECKING. 15
SERVICE PROCEDURES
ENGINE OIL LEVEL CHECK. 15
ENGINE OIL SERVICE 15
FORM-IN-PLACE GASKETS & SEALERS. 17
ENGINE GASKET SURFACE PREPARATION 18
MEASURING WITH PLASTIGAGE 18
CYLINDER BORE AND PISTON SIZING. 19
CYLINDER BORE—HONING 20
PISTON RING—FITTING 21
CONNECTING ROD AND BEARING—FITTING. . . 21
CRANKSHAFT MAIN BEARING—FITTING 22
CRANKSHAFT END PLAY 22
REPAIR OF DAMAGED OR WORN THREADS . . . 23
CAMSHAFT/CRANKSHAFT SYNCHRONIZATION. 23
REMOVAL AND INSTALLATION
TORQUE STRUTS 23
ENGINE MOUNT—LEFT 24
ENGINE MOUNT—RIGHT 24
STRUCTURAL COLLAR 26
ENGINE ASSEMBLY. 27
INTAKE MANIFOLD—UPPER. 31
INTAKE MANIFOLD—LOWER 33
EXHAUST MANIFOLD 34
CRANKSHAFT DAMPER 36
TIMING BELT COVER 37
TIMING BELT. 38
CYLINDER HEAD COVER 41
CAMSHAFT 42
CAMSHAFT OIL SEAL—FRONT. 44
HYDRAULIC LASH ADJUSTER 45
VALVE SPRINGS AND VALVE SEALS IN VEHICLE. 45
CYLINDER HEAD. 46
OIL PAN. 48
CRANKSHAFT OIL SEAL—FRONT. 48
CRANKSHAFT OIL SEAL—REAR. 50
CRANKSHAFT 51
PISTON AND CONNECTING ROD 55
OIL FILTER ADAPTER 57
OIL FILTER 57
OIL PUMP 57
ENGINE CORE PLUGS 58
DISASSEMBLY AND ASSEMBLY
OIL PUMP 59
VALVE SERVICE—CYLINDER HEAD REMOVED 60
CLEANING AND INSPECTION
INTAKE MANIFOLD 63

EXHAUST MANIFOLD 63
CYLINDER HEAD. 63
OIL PUMP 64
CYLINDER BLOCK. 66
ADJUSTMENTS
ENGINE TORQUE STRUT ADJUSTMENT 66
SPECIFICATIONS
ENGINE 67
TORQUE 70
SPECIAL TOOLS
ENGINE 71

DESCRIPTION AND OPERATION

2.0L DOHC ENGINE

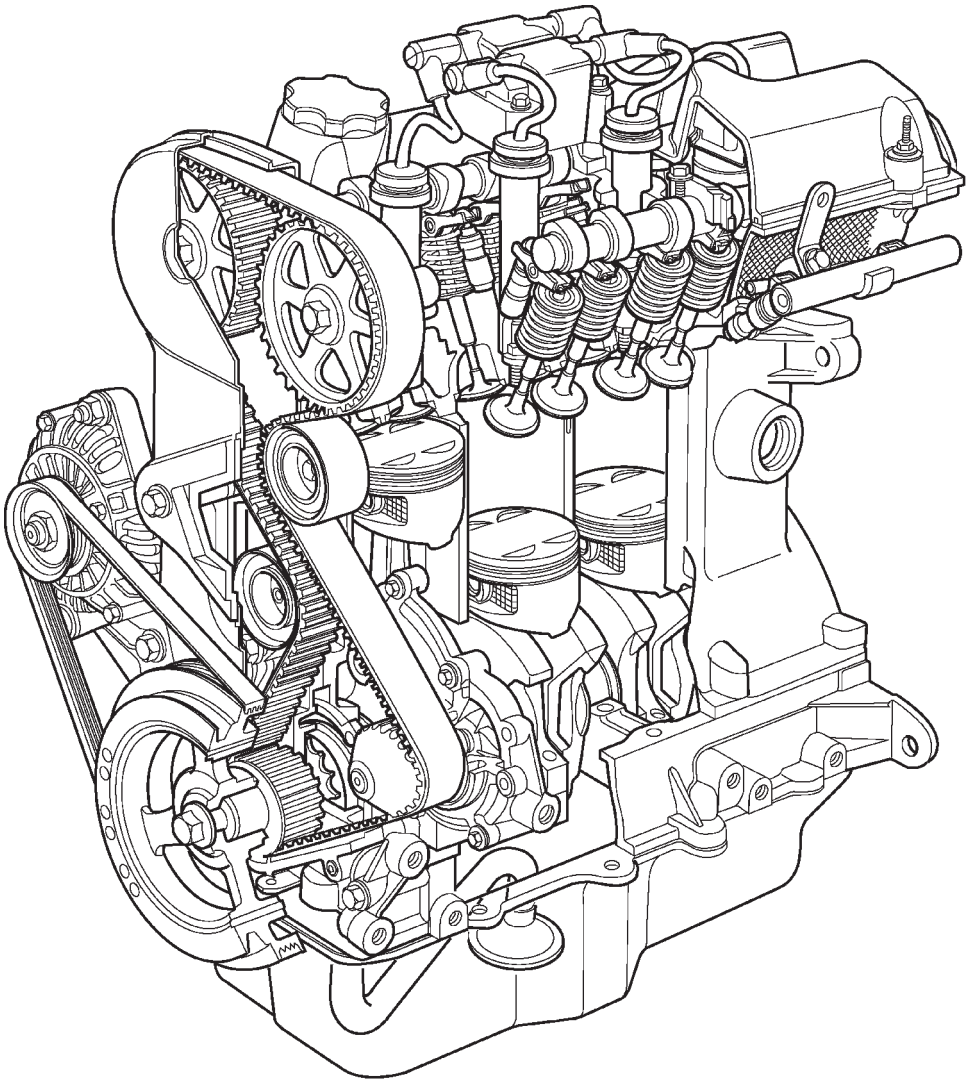

80c06eea

Fig. 1 2.0L DOHC Engine

DESCRIPTION AND OPERATION (Continued)

DESCRIPTION

The 2.0 Liter (122 cu. in.) in-line four cylinder engine is a dual over-head camshaft with hydraulic lifters and four valves per cylinder design (Fig. 1). The engine does not have provisions for a free wheeling valvetrain.

The cylinders are numbered form front of the engine to the rear. The firing order is 1–3–4–2.

The engine identification number is located on the left rear of the cylinder block (Fig. 2).

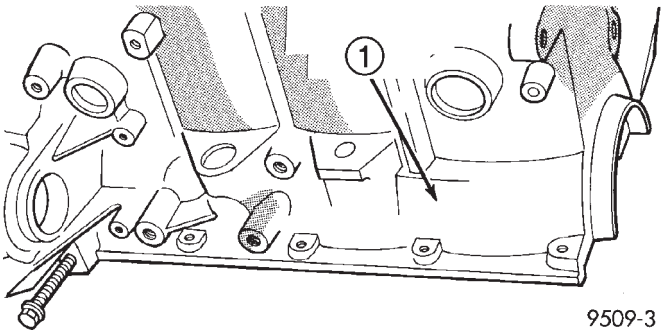

Fig. 2 Engine Identification

1 – ENGINE IDENTIFICATION LOCATION

CYLINDER BLOCK AND BEDPLATE

DESCRIPTION

The cast iron cylinder block is a two-piece assembly, encompassing the cylinder block and bedplate. The bedplate incorporates the main bearing caps and bolts to the cylinder block. This design offers a much stronger lower end and increased cylinder block rigidity. The rear oil seal retainer is integral with the block. The bedplate and block are serviced as an assembly.

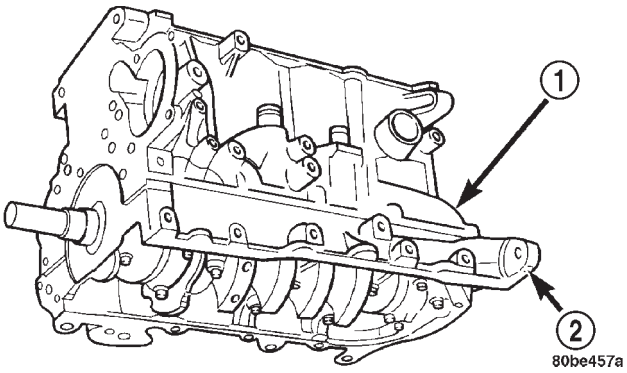

Fig. 3 Cylinder Block and Bedplate

1 – CYLINDER BLOCK
2 – BEDPLATE

CRANKSHAFT

DESCRIPTION

The crankshaft is made of nodular cast iron and includes five main bearing journals and four connecting rod journals (Fig. 4). The number three journal is the location for the thrust bearing. The mains and connecting rod journals have undercut fillet radiuses that are rolled for added strength. To optimize bearing loading, eight counterweights are used.

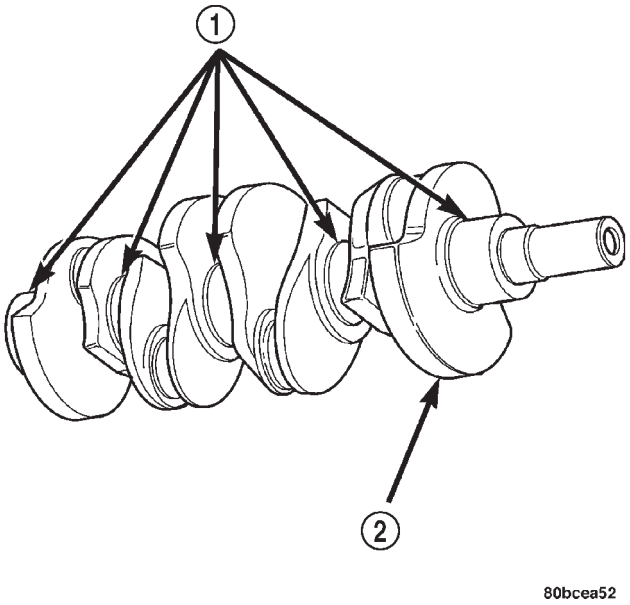

Fig. 4 Crankshaft

1 – MAIN BEARING JOURNALS
2 – COUNTER BALANCE WEIGHTS

OPERATION

The crankshaft transfers force generated by combustion within the cylinder to the flywheel or flexplate.

PISTON AND CONNECTING ROD

DESCRIPTION

NOTE: The engine DOES NOT have provisions for a free wheeling valve train. Non free wheeling valve train means, in the event of a broken timing belt, pistons will contact the valves.

The pistons are made of a cast aluminum alloy. The pistons have pressed-in pins attached to forged powdered metal connecting rods. The pistons pin is offset 1 mm (0.0394 in.) towards the thrust side of the piston. The connecting rods are a cracked cap design and are not repairable. Hex head cap screws are used to provide alignment and durability in the

DESCRIPTION AND OPERATION (Continued)

assembly. The pistons and connecting rods are serviced as an assembly

OPERATION

The piston and connecting rod is the link between the combustion force to the crankshaft.

CYLINDER HEAD

DESCRIPTION

The cross flow designed, aluminum cylinder head contains dual over-head camshafts with four valves per cylinder. The valves are arrange in two in-line banks. The intake valves face toward the front of the vehicle. The exhaust valves face the dash panel. The cylinder head incorporates powdered metal valve guides and seats. The cylinder head is sealed to the block using a multi-layer steel head gasket and retaining bolts.

Integral oil galleries providing lubrication passages to the hydraulic lash adjusters, camshafts, and valve mechanisms.

OPERATION

The cylinder head closes the combustion chamber, allowing the pistons to compress the air/fuel mixture for ignition. The valves are actuated by the lobe profiles on the camshaft to open and close at specified duration to either allow clean air in the combustion chamber or the exhaust gases out; depending on the stroke of the engine.

CAMSHAFT

DESCRIPTION

Both nodular iron camshafts have six bearing journal surfaces and two cam lobes per cylinder (Fig. 5). Flanges at the rear journals control camshaft end play. Provision for a cam position sensor is located on the intake camshaft on the rear of the cylinder head. A hydrodynamic oil seal is used for oil control at the front of the camshaft.

OPERATION

The camshaft is driven by the crankshaft via drive sprockets and belt. The camshaft has precisely machined lobes to provide accurate valve timing and duration.

VALVE AND VALVE SPRING

DESCRIPTION

The valves are made of heat resistant steel. They have chrome plated stems to prevent scuffing. Viton rubber valve stem seals are integral with the spring seats. The valves have three-bead lock keepers to retain springs and to promote valve rotation.

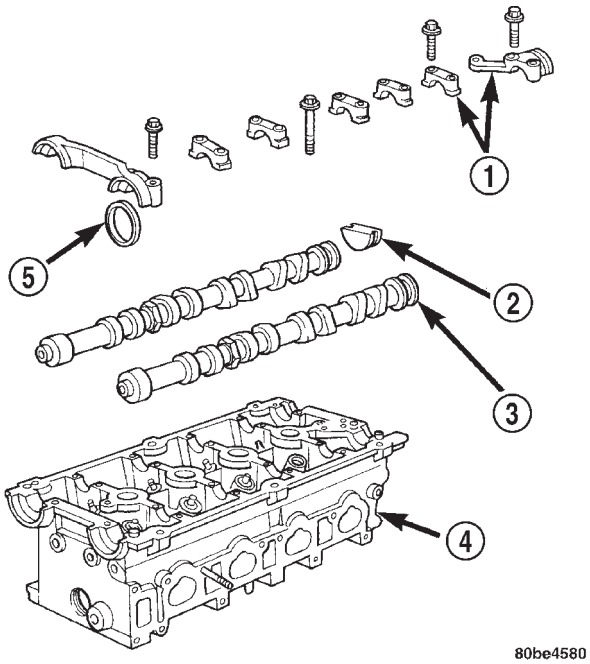

Fig. 5 Camshafts

1 – CAMSHAFT BEARING CAPS
2 – PLUG
3 – CAMSHAFT
4 – CYLINDER HEAD
5 – CAMSHAFT OIL SEAL

OPERATION

The four valves per cylinder (two intake and two exhaust) are opened by using roller camshaft followers which pivot on hydraulic lash adjusters.

INTAKE MANIFOLD

DESCRIPTION

The intake manifold is two piece and is made of a composite material (Fig. 6). The manifold attaches to the cylinder head with fasteners. The manifold's four tuned intake runners curve over the top of the cylinder head and connect to a plenum chamber. This design enhances low and mid-range torque and also provides less induction noise (rumble).

OPERATION

The intake manifold meters and delivers air to the combustion chambers. This air allows the fuel delivered by the fuel injectors to ignite, thus producing power.

DESCRIPTION AND OPERATION (Continued)

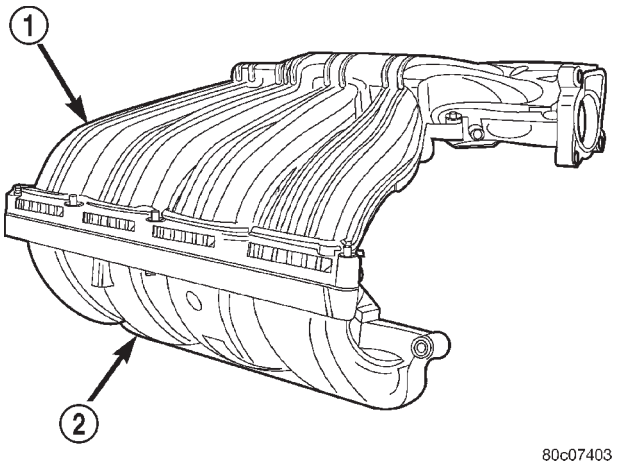

Fig. 6 Intake Manifold

1 – UPPER INTAKE MANIFOLD
2 – LOWER INTAKE MANIFOLD

EXHAUST MANIFOLD

DESCRIPTION

The exhaust manifold (Fig. 7) is made of nodular cast iron for strength and high temperatures. The manifold attaches to the cylinder head.

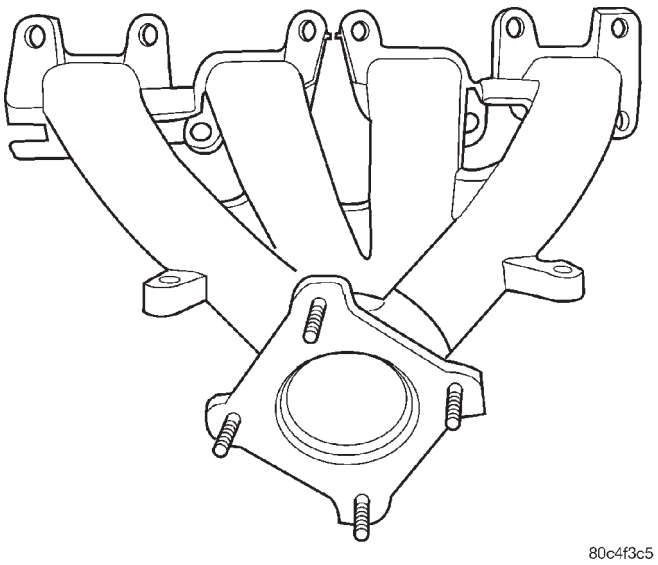

Fig. 7 Exhaust Manifold

OPERATION

The exhaust manifold collects the exhaust gasses exiting the combustion chambers. Then it channels the exhaust gasses to the exhaust pipe attached to the manifold.

ENGINE LUBRICATION

DESCRIPTION

The lubrication system is a full-flow filtration, pressure feed type. The oil pump is mounted in the front engine cover and driven by the crankshaft (Fig. 8).

OPERATION

Refer to (Fig. 9) for lubrication system flow.

Engine oil drawn from the oil pan sump through the pickup tube is pressurized by the pump and routed through the full-flow filter to the main oil gallery running the length of the cylinder block. A diagonal hole in each bulkhead feeds oil to each main bearing. Drilled passages within the crankshaft route oil from main bearing journals to connecting rod journals. A vertical hole at the number five bulkhead routes pressurized oil through a restrictor and up past a cylinder head bolt to an oil gallery running the length of the cylinder head. The restrictor, an integral part of the cylinder head gasket, provides increased oil flow to the main oil gallery. The camshaft journals are partially slotted to allow a predetermined amount of pressurized oil to pass into the bearing cap cavities with small holes directed to spray lubricate the camshaft lobes. Oil returning to the pan from pressurized components supplies lubrication to the valve stems. Cylinder bores and wrist pins are splash lubricated from directed slots on the connecting rod thrust collars.

DESCRIPTION AND OPERATION (Continued)

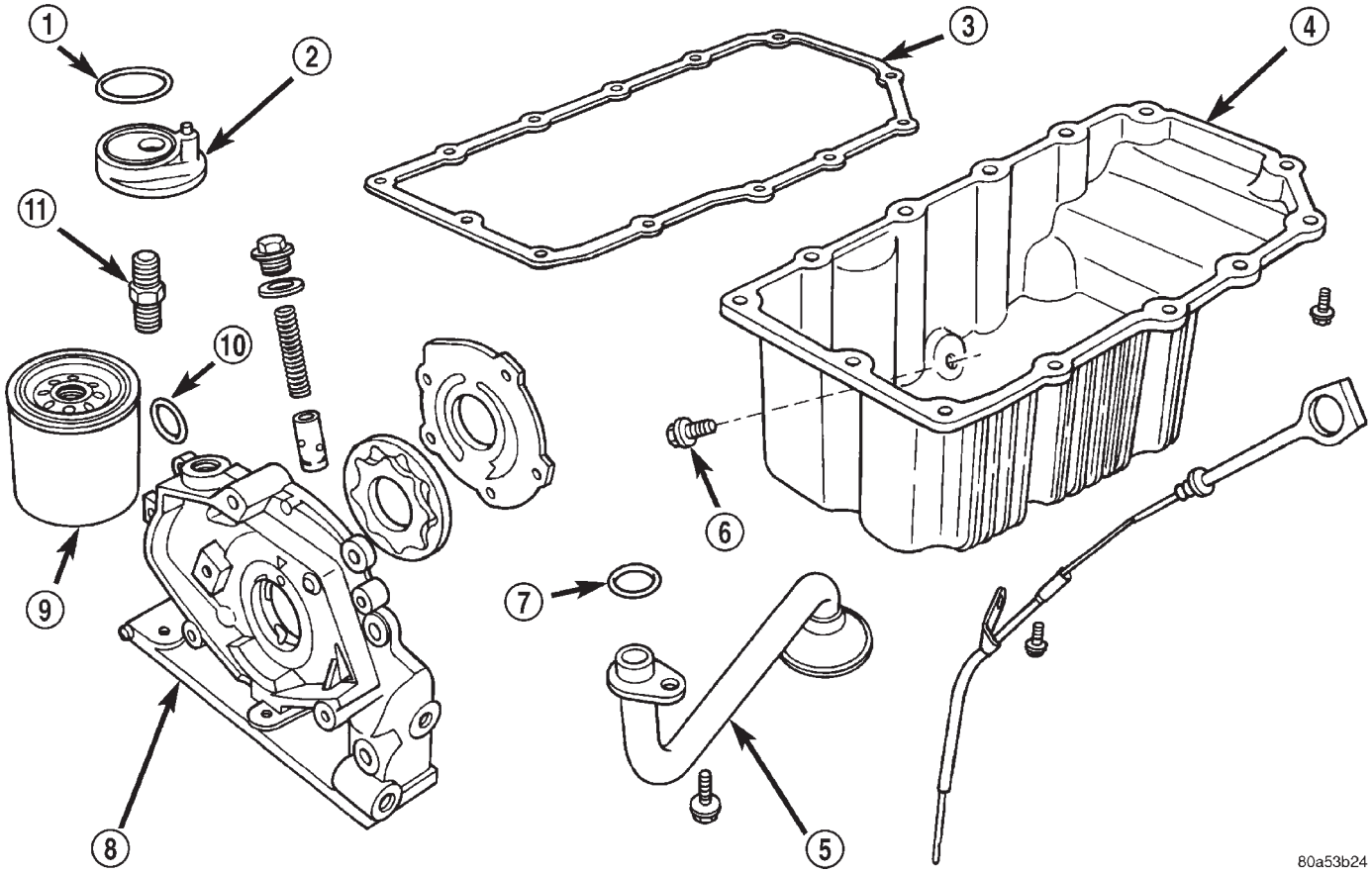

Fig. 8 Engine Lubrication Components

1 – O-RING
2 – OIL FILTER ADAPTER
3 – OIL PAN GASKET
4 – OIL PAN
5 – OIL PICK-UP TUBE
6 – DRAIN PLUG
7 – O-RING
8 – OIL PUMP BODY
9 – FILTER
10 – O-RING
11 – NIPPLE

DESCRIPTION AND OPERATION (Continued)

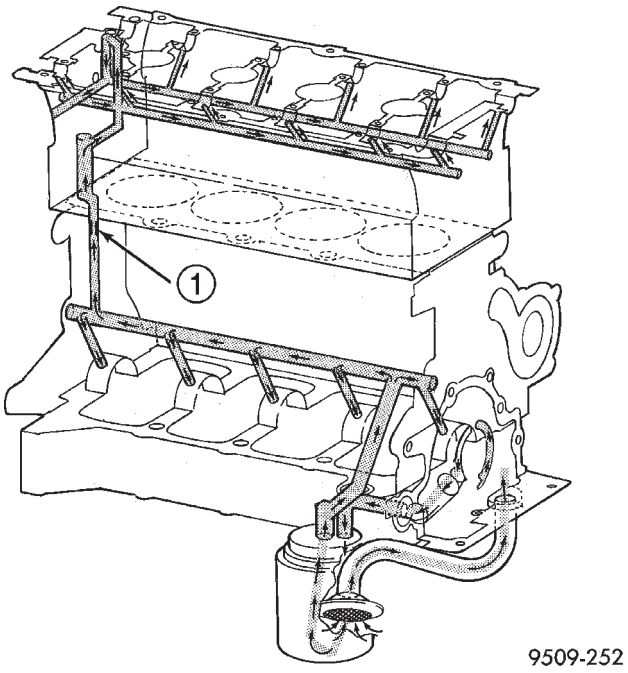

Fig. 9 Engine Lubrication System

1 – RESTRICTOR

ENGINE MOUNT

DESCRIPTION

The powertrain mounting system consist of a four-point system utilizing two load-carrying mounts and two torque struts. The load-carrying mounts are located on each frame rail. The right mount is a hydro-elastic mount and left mount is a conventional elastomeric isolator. The two torque controlling struts are attached at the front of the engine, straddling the right side load-carrying mount. The upper strut connects to the suspension strut tower and the lower to the suspension crossmember.

OPERATION

The four-point powertrain mounting system minimizes the transmission of structure-borne engine noise to the passenger compartment. The load-carrying right and left mounts dampen and isolate vertical motion and vibration. The two struts absorbs torque reaction forces and torsional vibrations.

DESCRIPTION AND OPERATION (Continued)

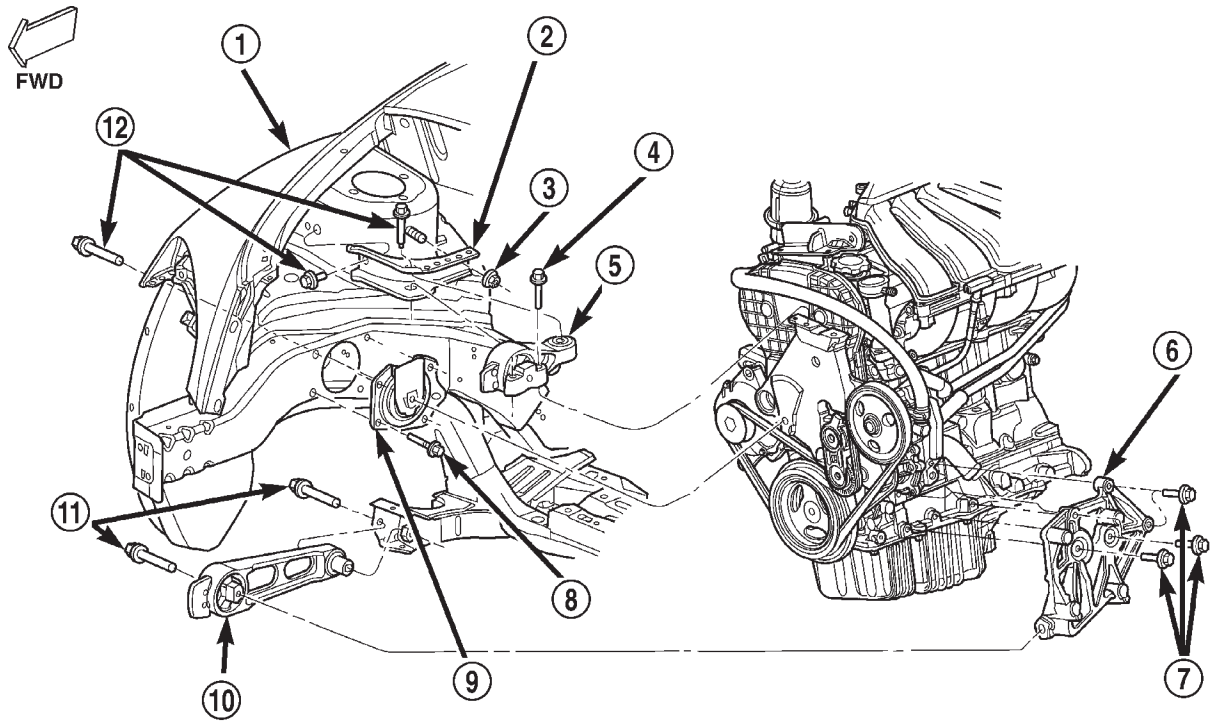

Fig. 10 Powertrain Mounting

1 – RIGHT FENDER
2 – UPPER TORQUE STRUT BRACKET
3 – NUT
4 – BOLT
5 – UPPER TORQUE STRUT
6 – LOWER TORQUE STRUT BRACKET
7 – BOLTS
8 – BOLTS
9 – RIGHT ENGINE MOUNT
10 – LOWER TORQUE STRUT
11 – BOLTS
12 – BOLTS

DIAGNOSIS AND TESTING

ENGINE DIAGNOSIS—INTRODUCTION

Engine diagnosis is helpful in determining the causes of malfunctions not detected and remedied by routine maintenance.

These malfunctions may be classified as either mechanical (e.g., a strange noise), or performance (e.g., engine idles rough and stalls).

Refer to the Service Diagnosis—Mechanical Chart and the Service Diagnosis—Performance Chart, for possible causes and corrections of malfunctions. Refer to FUEL SYSTEM for the fuel system diagnosis.

Additional tests and diagnostic procedures may be necessary for specific engine malfunctions that cannot be isolated with the Service Diagnosis charts. Information concerning additional tests and diagnosis is provided within the following:

- Cylinder Compression Pressure Test
- Cylinder Combustion Pressure Leakage Test
- Cylinder Head Gasket Failure Diagnosis
- Intake Manifold Leakage Diagnosis
- Lash Adjuster (Tappet) Noise Diagnosis
- Engine Oil Leak Inspection

DIAGNOSIS AND TESTING (Continued)

ENGINE DIAGNOSIS—PERFORMANCE

CONDITION	POSSIBLE CAUSE	CORRECTION
ENGINE WILL NOT START	1. Weak battery.	1. Test battery. Charge or replace as necessary. Refer to BATTERY.
	2. Corroded or loose battery connections.	2. Clean and tighten battery connections. Apply a coat of light mineral grease to terminals.
	3. Faulty starter.	3. Test starting system. Refer to STARTING.
	4. Faulty coil(s), or PCM.	4. Test and replace as needed. Refer to IGNITION SYSTEM.
	5. Incorrect spark plug gap.	5. Set gap. Refer to IGNITION SYSTEM.
	6. Contamination in fuel system.	6. Clean system and replace fuel filter.
	7. Faulty fuel pump.	7. Test fuel pump and replace as needed. Refer to FUEL SYSTEM.
	8. Incorrect engine timing.	8. Check for a skipped timing belt/chain.
ENGINE STALLS OR IDLES ROUGH	1. Idle speed too low.	1. Test minimum air flow. Refer to FUEL SYSTEM.
	2. Incorrect fuel mixture.	2. Refer to FUEL SYSTEM.
	3. Intake manifold leakage.	3. Inspect intake manifold, manifold gasket, and vacuum hoses.
	4. Faulty ignition coil(s) or spark plug cable(s).	4. Test and replace as necessary. Refer to IGNITION SYSTEM.
	5. Incorrect engine timing.	5. Check for a skipped timing belt/chain.
ENGINE LOSS OF POWER	1. Dirty or incorrectly gapped plugs.	1. Clean plugs and set gap. Refer to IGNITION SYSTEM.
	2. Contamination in fuel system.	2. Clean system and replace fuel filter.
	3. Faulty fuel pump.	3. Test and replace as necessary. Refer to FUEL SYSTEM.
	4. Incorrect valve timing.	4. Correct valve timing.
	5. Leaking cylinder head gasket.	5. Replace cylinder head gasket.
	6. Low compression.	6. Test compression of each cylinder.
	7. Burned, warped, or pitted valves.	7. Replace valves.
	8. Plugged or restricted exhaust system.	8. Check exhaust back pressure. Replace restricted component, as necessary.
	9. Faulty ignition coil(s) or spark plug cable(s).	9. Test and replace as necessary. Refer to IGNITION SYSTEM.

DIAGNOSIS AND TESTING (Continued)

CONDITION	POSSIBLE CAUSE	CORRECTION
ENGINE MISSES ON ACCELERATION	1. Dirty or incorrectly gapped spark plugs.	1. Clean spark plugs and set gap. Refer to IGNITION SYSTEM.
	2. Contamination in Fuel System.	2. Clean fuel system and replace fuel filter.
	3. Burned, warped, or pitted valves.	3. Replace valves.
	4. Faulty ignition coil(s) or spark plug cable(s).	4. Test and replace as necessary. Refer to IGNITION SYSTEM.
ENGINE MISSES AT HIGH SPEED	1. Dirty or incorrect spark plug gap.	1. Clean spark plugs and set gap. Refer to IGNITION SYSTEM.
	2. Faulty ignition coil(s) or spark plug cable(s).	2. Test and replace as necessary. Refer to IGNITION SYSTEM.
	3. Dirty fuel injector(s).	Test and replace as necessary. Refer to FUEL SYSTEM.
	4. Contamination in fuel system.	4. Clean system and replace fuel filter.

ENGINE DIAGNOSIS—MECHANICAL

CONDITION	POSSIBLE CAUSES	CORRECTION
NOISY VALVES	1. High or low oil level in crankcase.	1. Check and correct engine oil level.
	2. Thin or diluted oil.	2. Change oil to correct viscosity.
	3. Low oil pressure.	3. Check and correct engine oil level.
	4. Dirt in tappets/lash adjusters.	4. Replace rocker arm/hydraulic lash adjuster assembly.
	5. Worn rocker arms.	5. Inspect oil supply to rocker arms.
	6. Worn tappets/lash adjusters.	6. Install new rocker arm/hydraulic lash adjuster assembly.
	7. Worn valve guides.	7. Ream guides and install new valves with oversize stems.
	8. Excessive runout of valve seats on valve faces.	8. Grind valve seats and valves.
	9. Missing adjuster pivot.	9. Replace rocker arm/hydraulic lash adjuster assembly.
CONNECTING ROD NOISE	1. Insufficient oil supply.	1. Check engine oil level.
	2. Low oil pressure.	2. Check engine oil level. Inspect oil pump relief valve and spring.
	3. Thin or diluted oil.	3. Change oil to correct viscosity.
	4. Excessive bearing clearance.	4. Measure bearings for correct clearance. Repair as necessary.
	5. Connecting rod journal out-of-round.	5. Replace crankshaft or grind surface.
	6. Misaligned connecting rods.	6. Replace bent connecting rods.

DIAGNOSIS AND TESTING (Continued)

CONDITION	POSSIBLE CAUSES	CORRECTION
MAIN BEARING NOISE	1. Insufficient oil supply.	1. Check engine oil level.
	2. Low oil pressure.	2. Check engine oil level. Inspect oil pump relief valve and spring.
	3. Thin or diluted oil.	3. Change oil to correct viscosity.
	4. Excessive bearing clearance.	4. Measure bearings for correct clearance. Repair as necessary.
	5. Excessive end play.	5. Check thrust bearing for wear on flanges.
	6. Crankshaft journal out-of-round or worn.	6. Replace crankshaft or grind journals.
	7. Loose flywheel or torque converter.	7. Tighten to correct torque.
OIL PRESSURE DROP	1. Low oil level.	1. Check engine oil level.
	2. Faulty oil pressure sending unit.	2. Install new sending unit.
	3. Low oil pressure.	3. Check sending unit and main bearing oil clearance.
	4. Clogged oil filter.	4. Install new oil filter.
	5. Worn parts in oil pump.	5. Replace worn parts or pump.
	6. Thin or diluted oil.	6. Change oil to correct viscosity.
	7. Oil pump relief valve stuck.	7. Remove valve and inspect, clean, or replace.
	8. Oil pump suction tube loose.	8. Remove oil pan and install new tube or clean, if necessary.
	9. Oil pump cover warped or cracked.	9. Install new oil pump.
	10. Excessive bearing clearance.	10. Measure bearings for correct clearance.
OIL LEAKS	1. Misaligned or deteriorated gaskets.	1. Replace gasket(s).
	2. Loose fastener, broken or porous metal part.	2. Tighten, repair or replace the part.
	3. PCV system malfunction.	3. Check system and repair as necessary. Refer to EMISSION CONTROL SYSTEMS.
	4. Misaligned or deteriorated cup or threaded plug.	4. Replace as necessary.

DIAGNOSIS AND TESTING (Continued)

CONDITION	POSSIBLE CAUSES	CORRECTION
OIL CONSUMPTION OR SPARK PLUGS FOULED	1. PCV system malfunction.	1. Check system and repair as necessary. Refer to EMISSION CONTROL SYSTEMS.
	2. Worn, scuffed or broken rings.	2. Hone cylinder bores. Install new rings.
	3. Carbon in oil ring slots.	3. Install new rings.
	4. Rings fitted too tightly in grooves.	4. Remove rings and check grooves. If groove is not proper width, replace piston.
	5. Worn valve guide(s).	5. Ream guide(s) and replace valve(s) with oversize valve(s) and seal(s).
	6. Valve stem seal(s) worn or damaged.	6. Replace seal(s).

HYDROSTATIC LOCKED ENGINE

When an engine is suspected to be hydrostatically locked, regardless of what caused the problem, the following steps should be used.

CAUTION: DO NOT use starter motor to rotate the engine, severe damage may occur.

(1) Inspect air cleaner, induction system and intake manifold to insure system is dry and clear of foreign material.
(2) Remove negative battery cable.
(3) Place a shop towel around the spark plugs when removing them from the engine. This will catch any fluid that may possibly be in the cylinder under pressure.
(4) With all spark plugs removed, rotate engine crankshaft using a breaker bar and socket.
(5) Identify the fluid in the cylinder(s) (i.e., coolant, fuel, oil or other).
(6) Make sure all fluid has been removed from the cylinders. Inspect engine for damage (i.e., connecting rods, pistons, valves, etc.)
(7) Repair engine or components as necessary to prevent this problem from re-occurring.

CAUTION: Squirt approximately one teaspoon of oil into the cylinders, rotate engine to lubricate the cylinder walls to prevent damage on restart.

(8) Install new spark plugs.
(9) Drain engine oil and remove oil filter.
(10) Fill engine with specified amount of approved oil and install new oil filter.
(11) Connect negative battery cable.
(12) Start engine and check for any leaks.

INTAKE MANIFOLD LEAKAGE DIAGNOSIS

An intake manifold air leak is characterized by lower than normal manifold vacuum. Also, one or more cylinders may not be functioning.

WARNING: USE EXTREME CAUTION WHEN THE ENGINE IS OPERATING. DO NOT STAND IN A DIRECT LINE WITH THE FAN. DO NOT PUT YOUR HANDS NEAR THE PULLEYS, BELTS OR THE FAN. DO NOT WEAR LOOSE CLOTHING.

(1) Start the engine.
(2) Spray a small stream of water (Spray Bottle) at the suspected leak area.
(3) If engine RPM'S change, the area of the suspected leak has been found.
(4) Repair or replace component as necessary.

CYLINDER COMPRESSION PRESSURE TEST

The results of a cylinder compression pressure test can be utilized to diagnose several engine malfunctions.

Ensure the battery is completely charged and the engine starter motor is in good operating condition. Otherwise the indicated compression pressures may not be valid for diagnosis purposes.

(1) Check engine oil level and add oil if necessary.
(2) Drive the vehicle until engine reaches normal operating temperature. Select a route free from traffic and other forms of congestion, observe all traffic laws, and accelerate through the gears several times briskly.
(3) Remove all spark plugs from engine. As spark plugs are being removed, check electrodes for abnormal firing indicators fouled, hot, oily, etc. Record cylinder number of spark plug for future reference.

DIAGNOSIS AND TESTING (Continued)

(4) Disconnect coil wire from distributor and secure to good ground to prevent a spark from starting a fire (Conventional Ignition System). For Direct Ignition System DIS disconnect the coil connector.

(5) Be sure throttle blade is fully open during the compression check.

(6) Insert compression gage adaptor Special Tool 8116 or the equivalent, into the #1 spark plug hole in cylinder head. Connect the 0–500 psi (Blue) pressure transducer with cable adaptors to the DRBIII®.

(7) Crank engine until maximum pressure is reached on gage. Record this pressure as #1 cylinder pressure.

(8) Repeat the previous step for all remaining cylinders.

(9) Compression should not be less than 689 kPa (100 psi) and not vary more than 25 percent from cylinder to cylinder.

(10) If one or more cylinders have abnormally low compression pressures, repeat the compression test.

(11) If the same cylinder or cylinders repeat an abnormally low reading on the second compression test, it could indicate the existence of a problem in the cylinder in question. **The recommended compression pressures are to be used only as a guide to diagnosing engine problems. An engine should not be disassembled to determine the cause of low compression unless some malfunction is present.**

CYLINDER COMBUSTION PRESSURE LEAKAGE TEST

The combustion pressure leakage test provides an accurate means for determining engine condition.

Combustion pressure leakage testing will detect:

- Exhaust and intake valve leaks (improper seating).
- Leaks between adjacent cylinders or into water jacket.
- Any causes for combustion/compression pressure loss.

WARNING: DO NOT REMOVE THE RADIATOR CAP WITH THE SYSTEM HOT AND UNDER PRESSURE BECAUSE SERIOUS BURNS FROM COOLANT CAN OCCUR.

Check the coolant level and fill as required. DO NOT install the radiator cap.

Start and operate the engine until it attains normal operating temperature, then turn the engine OFF.

Clean spark plug recesses with compressed air.

Remove the spark plugs.

Remove the oil filler cap.

Remove the air cleaner.

Calibrate the tester according to the manufacturer's instructions. The shop air source for testing should maintain 483 kPa (70 psi) minimum, 1,379 kPa (200 psi) maximum, with 552 kPa (80 psi) recommended.

Perform the test procedures on each cylinder according to the tester manufacturer's instructions. While testing, listen for pressurized air escaping through the throttle body, tailpipe and oil filler cap opening. Check for bubbles in the radiator coolant.

All gauge pressure indications should be equal, with no more than 25% leakage per cylinder.

FOR EXAMPLE: At 552 kPa (80 psi) input pressure, a minimum of 414 kPa (60 psi) should be maintained in the cylinder.

CYLINDER HEAD GASKET FAILURE DIAGNOSIS

A leaking engine cylinder head gasket usually results in loss of power, loss of coolant, and engine misfiring.

An engine cylinder head gasket leak can be located between adjacent cylinders or between a cylinder and the adjacent water jacket.

- An engine cylinder head gasket leaking between adjacent cylinders is indicated by a loss of power and/or engine misfire.
- An engine cylinder head gasket leaking between a cylinder and an adjacent water jacket is indicated by coolant foaming or overheating and loss of coolant.

CYLINDER-TO-CYLINDER LEAKAGE TEST

To determine if an engine cylinder head gasket is leaking between adjacent cylinders, follow the procedures in Cylinder Compression Pressure Test. An engine cylinder head gasket leaking between adjacent cylinders will result in approximately a 50–70% reduction in compression pressure.

CYLINDER-TO-WATER JACKET LEAKAGE TEST

WARNING: USE EXTREME CAUTION WHEN THE ENGINE IS OPERATING. DO NOT STAND IN A DIRECT LINE WITH THE FAN. DO NOT PUT YOUR HANDS NEAR THE PULLEYS, BELTS, OR THE FAN. DO NOT WEAR LOOSE CLOTHING.

Remove the radiator cap.

Start the engine and allow it to warm up until the engine thermostat opens.

If a large combustion/compression pressure leak exists, bubbles will be visible in the coolant.

If bubbles are not visible, perform either of the following procedures:

PRESSURE TEST

- Install cooling system tester Special Tool 7700 or equivalent, and pressurize the coolant system.

DIAGNOSIS AND TESTING (Continued)

• If a cylinder is leaking combustion pressure into the water jacket, the tester pointer will pulsate with every combustion stroke of the cylinder.

CHEMICAL TEST

• This procedure involves using Bloc-Chek Test Kit, Special Tool C-3685-A or the equivalent. Perform test procedure following the instructions included with the test kit.

LASH ADJUSTER (TAPPET) NOISE DIAGNOSIS

A tappet-like noise may be produced from several items. Check the following items.

(1) Engine oil level too high or too low. This may cause aerated oil to enter the adjusters and cause them to be spongy.

(2) Insufficient running time after rebuilding cylinder head. Low speed running up to 1 hour may be required.

(3) During this time, turn engine off and let set for a few minutes before restarting. Repeat this several times after engine has reached normal operating temperature.

(4) Low oil pressure.

(5) The oil restrictor (integral to the cylinder head gasket) in the vertical oil passage to the cylinder head is plugged with debris.

(6) Air ingested into oil due to broken or cracked oil pump pick up.

(7) Worn valve guides.

(8) Rocker arm ears contacting valve spring retainer.

(9) Rocker arm loose, adjuster stuck or at maximum extension and still leaves lash in the system.

(10) Faulty lash adjuster.

a. Check lash adjusters for sponginess while installed in cylinder head. Depress part of rocker arm over adjuster. Normal adjusters should feel very firm. Spongy adjusters can be bottomed out easily.

b. Remove suspected lash adjusters, and replace as necessary.

ENGINE OIL LEAK INSPECTION

Begin with a thorough visual inspection of the engine, particularly at the area of the suspected leak. If an oil leak source is not readily identifiable, the following steps should be followed:

(1) Do not clean or degrease the engine at this time because some solvents may cause rubber to swell, temporarily stopping the leak.

(2) Add an oil soluble dye (use as recommended by manufacturer). Start the engine and let idle for approximately 15 minutes. Check the oil dipstick to make sure the dye is thoroughly mixed as indicated with a bright yellow color under a black light.

(3) Using a black light, inspect the entire engine for fluorescent dye, particularly at the suspected area of oil leak. If the oil leak is found and identified, repair per service manual instructions.

(4) If dye is not observed, drive the vehicle at various speeds for approximately 24 km (15 miles), and repeat inspection.

(5) **If the oil leak source is not positively identified at this time**, proceed with the air leak detection test method as follows:

• Disconnect the fresh air hose (make-up air) at the cylinder head cover and plug or cap the nipple on the cover.

• Remove the PCV valve hose from the cylinder head cover. Cap or plug the PCV valve nipple on the cover.

• Attach an air hose with pressure gauge and regulator to the dipstick tube.

CAUTION: Do not subject the engine assembly to more than 20.6 kpa (3 PSI) of test pressure.

• Gradually apply air pressure from 1 psi to 2.5 psi maximum while applying soapy water at the suspected source. Adjust the regulator to the suitable test pressure that provides the best bubbles which will pinpoint the leak source. If the oil leak is detected and identified, repair per service manual procedures.

• If the leakage occurs at the crankshaft rear oil seal area, refer to the section, Inspection for Rear Seal Area Leak.

(6) If no leaks are detected, turn off the air supply. Remove the air hose, all plugs, and caps. Install the PCV valve and fresh air hose (make-up air). Proceed to next step.

(7) Clean the oil off the suspect oil leak area using a suitable solvent. Drive the vehicle at various speeds approximately 24 km (15 miles). Inspect the engine for signs of an oil leak by using a black light.

NOTE: If oil leakage is observed at the dipstick tube to block location; remove the tube, clean and reseal using Mopar® Stud & Bearing Mount (press fit tube applications only), and for O-ring style tubes, remove tube and replace the O-ring seal.

INSPECTION FOR REAR SEAL AREA LEAKS

Since it is sometimes difficult to determine the source of an oil leak in the rear seal area of the engine, a more involved inspection is necessary. The following steps should be followed to help pinpoint the source of the leak.

If the leakage occurs at the crankshaft rear oil seal area:

(1) Disconnect the battery.

DIAGNOSIS AND TESTING (Continued)

(2) Raise the vehicle.

(3) Remove torque converter or clutch housing cover and inspect rear of block for evidence of oil. Use a black light to check for the oil leak. If a leak is present in this area, remove transmission for further inspection.

(a) Circular spray pattern generally indicates seal leakage or crankshaft damage.

(b) Where leakage tends to run straight down, possible causes are a porous block, oil gallery cup plug, bedplate to cylinder block mating surfaces and seal bore. See proper repair procedures for these items.

(4) If no leaks are detected, pressurize the crankcase as previously described.

CAUTION: Do not exceed 20.6 kPa (3 psi).

(5) If the leak is not detected, very slowly turn the crankshaft and watch for leakage. If a leak is detected between the crankshaft and seal while slowly turning the crankshaft, it is possible the crankshaft seal surface is damaged. The seal area on the crankshaft could have minor nicks or scratches that can be polished out with emery cloth.

CAUTION: Use extreme caution when crankshaft polishing is necessary to remove minor nicks and scratches. The crankshaft seal flange is especially machined to complement the function of the rear oil seal.

(6) For bubbles that remain steady with shaft rotation, no further inspection can be done until disassembled.

(7) After the oil leak root cause and appropriate corrective action have been identified, refer to Crankshaft Oil Seal—Rear for proper replacement procedures.

ENGINE OIL PRESSURE CHECKING

(1) Remove oil pressure switch and install gauge assembly C-3292 with adaptor.

(2) Run engine until thermostat opens.

CAUTION: If oil pressure is 0 at idle, Do Not perform the 3000 RPM test in the next step.

(3) Oil Pressure: **Curb Idle** 25 kPa (4 psi) minimum **3000 RPM** 170-550 kPa (25-80 psi).

(4) If oil pressure is 0 at idle. Shut off engine, check for pressure relief valve stuck open, a clogged oil pick-up screen or a damaged oil pick-up tube O-ring.

SERVICE PROCEDURES

ENGINE OIL LEVEL CHECK

The best time to check engine oil level is after it has sat overnight, or if the engine has been running, allow the engine to be shut off for at least 5 minutes before checking oil level.

Checking the oil while the vehicle is on level ground will improve the accuracy of the oil level reading. Remove dipstick (Fig. 11), and observe oil level. Add oil only when the level is at or below the ADD mark (Fig. 12).

ENGINE OIL SERVICE

WARNING: NEW OR USED ENGINE OIL CAN BE IRRITATING TO THE SKIN. AVOID PROLONGED OR REPEATED SKIN CONTACT WITH ENGINE OIL. CONTAMINANTS IN USED ENGINE OIL, CAUSED BY INTERNAL COMBUSTION, CAN BE HAZARDOUS TO YOUR HEALTH. THOROUGHLY WASH EXPOSED SKIN WITH SOAP AND WATER. DO NOT WASH SKIN WITH GASOLINE, DIESEL FUEL, THINNER, OR SOLVENTS, HEALTH PROBLEMS CAN RESULT. DO NOT POLLUTE, DISPOSE OF USED ENGINE OIL PROPERLY. CONTACT YOUR DEALER OR GOVERNMENT AGENCY FOR LOCATION OF COLLECTION CENTER IN YOUR AREA.

ENGINE OIL SPECIFICATION

CAUTION: Do not use non-detergent or straight mineral oil when adding or changing crankcase lubricant. Engine failure can result.

API SERVICE GRADE CERTIFIED

Use an engine oil that is API Service Grade Certified. MOPAR® provides engine oils that conforms to this service grade.

SAE VISCOSITY

An SAE viscosity grade is used to specify the viscosity of engine oil. Use only, engine oils with multiple viscosities such as 5W-30 or 10W-30. These are specified with a dual SAE viscosity grade which indicates the cold-to-hot temperature viscosity range. SAE 5W-30 engine oil is preferred. Select an engine oil that is best suited to your particular temperature range and variation (Fig. 13).

ENERGY CONSERVING OIL

An Energy Conserving type oil is recommended for gasoline engines. The designation of ENERGY CONSERVING is located on the label of the engine oil container.

SERVICE PROCEDURES (Continued)

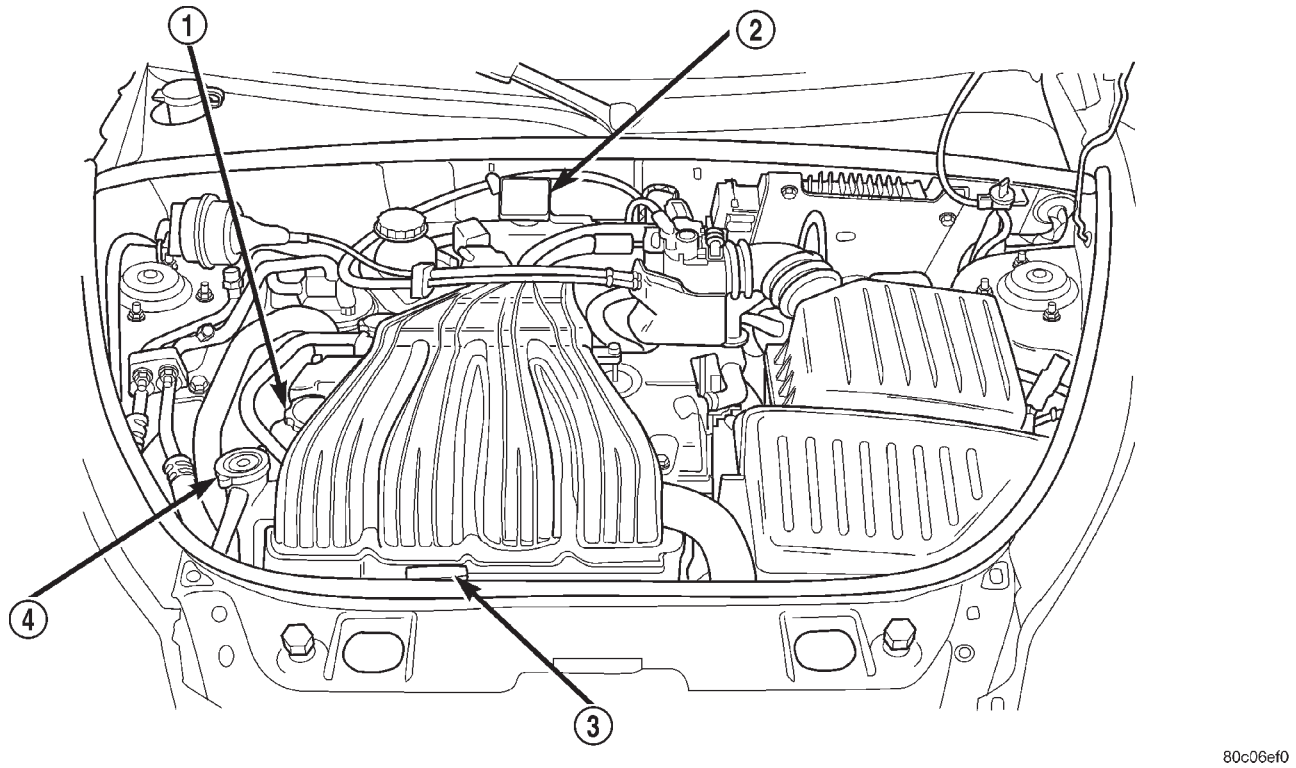

Fig. 11 Dipstick and Engine Oil Fill Locations—2.0L

1 – ENGINE OIL FILL
2 – COOLANT RECOVERY BOTTLE
3 – ENGINE OIL DIPSTICK
4 – COOLANT PRESSURE CAP

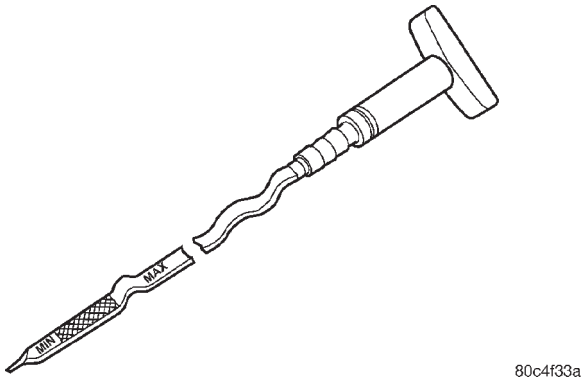

Fig. 12 Oil Level

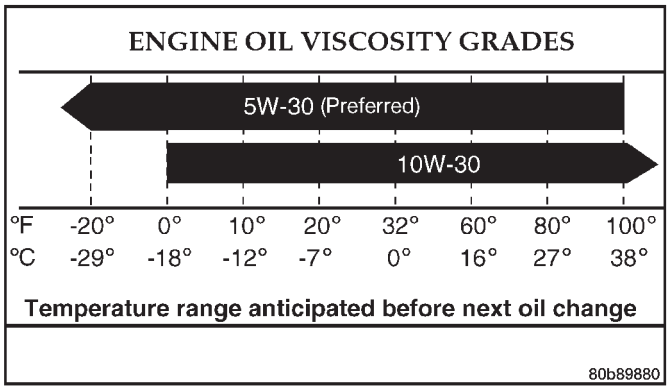

Fig. 13 Temperature/Engine Oil Viscosity

CONTAINER IDENTIFICATION

Standard engine oil identification notations have been adopted to aid in the proper selection of engine oil. The identifying notations are located on the label of engine oil plastic bottles and the top of engine oil cans (Fig. 14).

ENGINE OIL CHANGE

Change engine oil at mileage and time intervals described in the Group 0, Lubrication and Maintenance.

9400-9

Fig. 14 Engine Oil Container Standard Notations

SERVICE PROCEDURES (Continued)

TO CHANGE ENGINE OIL

Run engine until achieving normal operating temperature.

(1) Position the vehicle on a level surface and turn engine off.

(2) Hoist and support vehicle on safety stands. Refer to LUBRICATION AND MAINTENANCE for Hoisting and Jacking Recommendations.

(3) Remove oil fill cap.

(4) Place a suitable drain pan under crankcase drain.

(5) Remove drain plug from crankcase and allow oil to drain into pan. Inspect drain plug threads for stretching or other damage. Replace drain plug and gasket if damaged.

(6) Install drain plug in crankcase.

(7) Lower vehicle and fill crankcase with specified type and amount of engine oil described in this section.

(8) Install oil fill cap.

(9) Start engine and inspect for leaks.

(10) Stop engine and inspect oil level.

FORM-IN-PLACE GASKETS & SEALERS

There are numerous places where form-in-place gaskets are used on the engine. Care must be taken when applying form-in-place gaskets to assure obtaining the desired results. **Do not use form-in-place gasket material unless specified.** Bead size, continuity, and location are of great importance. Too thin a bead can result in leakage while too much can result in spill-over which can break off and obstruct fluid feed lines. A continuous bead of the proper width is essential to obtain a leak-free gasket.

There are numerous types of form-in-place gasket materials that are used in the engine area. Mopar® Engine RTV GEN II, Mopar® ATF-RTV, and Mopar® Gasket Maker gasket materials, each have different properties and can not be used in place of the other.

MOPAR® ENGINE RTV GEN II

Mopar® Engine RTV GEN II is used to seal components exposed to engine oil. This material is a specially designed black silicone rubber RTV that retains adhesion and sealing properties when exposed to engine oil. Moisture in the air causes the material to cure. This material is available in three ounce tubes and has a shelf life of one year. After one year this material will not properly cure. Always inspect the package for the expiration date before use.

MOPAR® ATF RTV

Mopar® ATF RTV is a specifically designed black silicone rubber RTV that retains adhesion and sealing properties to seal components exposed to automatic transmission fluid, engine coolants, and moisture. This material is available in three ounce tubes and has a shelf life of one year. After one year this material will not properly cure. Always inspect the package for the expiration date before use.

MOPAR® GASKET MAKER

Mopar® Gasket Maker is an anaerobic type gasket material. The material cures in the absence of air when squeezed between two metallic surfaces. It will not cure if left in the uncovered tube. The anaerobic material is for use between two machined surfaces. Do not use on flexible metal flanges.

MOPAR® BED PLATE SEALANT

Mopar® Bed Plate Sealant is a unique (green-in-color) anaerobic type gasket material that is specially made to seal the area between the bedplate and cylinder block without disturbing the bearing clearance or alignment of these components. The material cures slowly in the absence of air when torqued between two metallic surfaces, and will rapidly cure when heat is applied.

MOPAR® GASKET SEALANT

Mopar® Gasket Sealant is a slow drying, permanently soft sealer. This material is recommended for sealing threaded fittings and gaskets against leakage of oil and coolant. Can be used on threaded and machined parts under all temperatures. This material is used on engines with multi-layer steel (MLS) cylinder head gaskets. This material also will prevent corrosion. Mopar® Gasket Sealant is available in a 13 oz. aerosol can or 4oz./16 oz. can w/applicator.

FORM-IN-PLACE GASKET AND SEALER APPLICATION

Assembling parts using a form-in-place gasket requires care but it's easier then using precut gaskets.

Mopar® Gasket Maker material should be applied sparingly 1 mm (0.040 in.) diameter or less of sealant to one gasket surface. Be certain the material surrounds each mounting hole. Excess material can easily be wiped off. Components should be torqued in place within 15 minutes. The use of a locating dowel is recommended during assembly to prevent smearing material off the location.

Mopar® Engine RTV GEN II or ATF RTV gasket material should be applied in a continuous bead approximately 3 mm (0.120 in.) in diameter. All mounting holes must be circled. For corner sealing, a 3.17 or 6.35 mm (1/8 or 1/4 in.) drop is placed in the center of the gasket contact area. Uncured sealant may be removed with a shop towel. Components should be torqued in place while the sealant is still wet to the touch (within 10 minutes). The usage of a locating dowel is recommended during assembly to prevent smearing material off the location.

Mopar® Gasket Sealant in an aerosol can should be applied using a thin, even coat sprayed completely

SERVICE PROCEDURES (Continued)

over both surfaces to be joined, and both sides of a gasket. Then proceed with assembly. Material in a can w/applicator can be brushed on evenly over the sealing surfaces. Material in an aerosol can should be used on engines with multi-layer steel gaskets.

ENGINE GASKET SURFACE PREPARATION

To ensure engine gasket sealing, proper surface preparation must be performed, especially with the use of aluminum engine components and multi-layer steel cylinder head gaskets.

Never use the following to clean gasket surfaces:

- Metal scraper
- Abrasive pad or paper to clean cylinder block and head
- High speed power tool with an abrasive pad or a wire brush (Fig. 15)

NOTE: Multi-Layer Steel (MLS) head gaskets require a scratch free sealing surface.

Only use the following for cleaning gasket surfaces:

- Solvent or a commercially available gasket remover
- Plastic or wood scraper (Fig. 15)
- Drill motor with 3M Roloc™ Bristle Disc (white or yellow) (Fig. 15)

CAUTION: Excessive pressure or high RPM (beyond the recommended speed), can damage the sealing surfaces. The mild (white, 120 grit) bristle disc is recommended. If necessary, the medium (yellow, 80 grit) bristle disc may be used on cast iron surfaces with care.

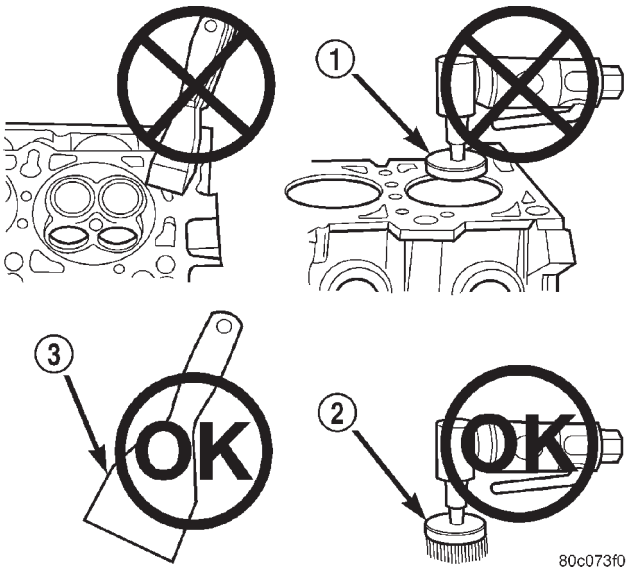

Fig. 15 Proper Tool Usage For Surface Preparation

1 – ABRASIVE PAD
2 – 3M ROLOC™ BRISTLE DISC
3 – PLASTIC/WOOD SCRAPER

MEASURING WITH PLASTIGAGE

PLASTIGAGE METHOD

Engine crankshaft bearing clearances can be determined by use of Plastigage or equivalent. The following is the recommended procedure for the use of Plastigage:

NOTE: The total clearance of the main bearings can only be determined by removing the weight of the crankshaft. This can be accomplished by either of two methods:

PREFERRED METHOD

Shim the bearings adjacent to the bearing to be checked in order to remove the clearance between upper bearing shell and the crankshaft. This can be accomplished by placing a minimum of 0.254 mm (0.010 in.) shim (e. g. cardboard, matchbook cover, etc.) between the bearing shell and the bearing cap on the adjacent bearings and tightening bolts to 14-20 N·m (10-15 ft. lbs.). The number of main bearing will vary from engine to engine.

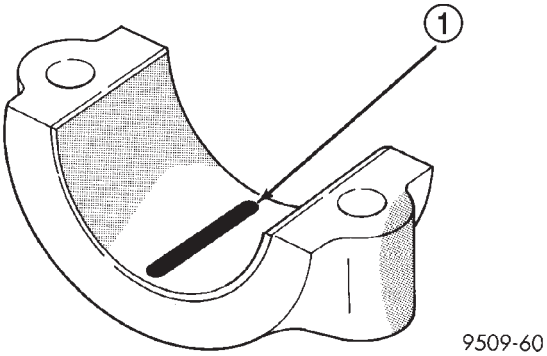

Fig. 16 Plastigage Placed in Lower Shell

1 – PLASTIGAGE

ENGINE WITH 5 MAIN BEARINGS

- When checking #1 main bearing shim #2 main bearing.
- When checking #2 main bearing shim #1 & 3 main bearing.
- When checking #3 main bearing shim #2 & 4 main bearing.
- When checking #4 main bearing shim #3 & 5 main bearing.
- When checking #5 main bearing shim #4 main bearing.

SERVICE PROCEDURES (Continued)

ENGINE WITH 4 MAIN BEARING

- When checking #1 main bearing shim # 2 main bearing.
- When checking #2 main bearing shim #1 & #3 main bearing.
- When checking #3 main bearing shim #2 & #4 main bearing.
- When checking #4 main bearing shim #3 main bearing.

NOTE: REMOVE ALL SHIMS BEFORE REASSEMBLING ENGINE

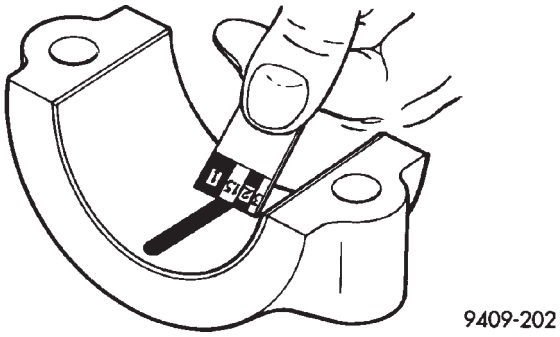

Fig. 17 Clearance Measurement

ALTERNATIVE METHOD

The weight of the crankshaft can be supported by a jack under the counterweight adjacent to the bearing being checked.

PLASTIGAGE PROCEDURE

(1) Remove oil film from surface to be checked. Plastigage is soluble in oil.

(2) Place a piece of Plastigage across the entire width of the bearing shell in the cap approximately 6.35 mm (1/4 in.) off center and away from the oil holes (Fig. 16). (In addition, suspected areas can be checked by placing the Plastigage in the suspected area). Torque the bearing cap bolts of the bearing being checked to the proper specifications.

(3) Remove the bearing cap and compare the width of the flattened Plastigage (Fig. 17) with the metric scale provided on the package. Locate the band closest to the same width. This band shows the amount of clearance in thousandths of a millimeter. Differences in readings between the ends indicate the amount of taper present. Record all readings taken. Refer to Engine Specifications. **Plastigage generally is accompanied by two scales. One scale is in inches, the other is a metric scale.**

NOTE: Plastigage is available in a variety of clearance ranges. Use the most appropriate range for the specifications you are checking.

CONNECTING ROD BEARING CLEARANCE

Engine connecting rod bearing clearances can be determined by use of Plastigage or equivalent. The following is the recommended procedure for the use of Plastigage:

(1) Rotate the crankshaft until the connecting rod to be checked is at the bottom of its stroke.

(2) Remove oil film from surface to be checked. Plastigage is soluble in oil.

(3) Place a piece of Plastigage across the entire width of the bearing shell in the bearing cap approximately 6.35 mm (1/4 in.) off center and away from the oil hole (Fig. 16). In addition, suspect areas can be checked by placing plastigage in that area.

(4) Assemble the rod cap with Plastigage in place. Tighten the rod cap to the specified torque. **Do not rotate the crankshaft while assembling the cap or the Plastigage may be smeared, giving inaccurate results.**

(5) Remove the bearing cap and compare the width of the flattened Plastigage (Fig. 17) with the scale provided on the package. Locate the band closest to the same width. This band indicates the amount of oil clearance. Differences in readings between the ends indicate the amount of taper present. Record all readings taken. Refer to Engine Specifications. **Plastigage generally is accompanied by two scales. One scale is in inches, the other is a metric scale. If the bearing clearance exceeds wear limit specification, replace the bearing.**

CYLINDER BORE AND PISTON SIZING

The cylinder walls should be checked for out-of-round and taper with Tool C-119 (Fig. 18). The cylinder bore out-of-round is 0.050 mm (0.002 in.) maximum and cylinder bore taper is 0.051 mm (0.002 in.) maximum. If the cylinder walls are badly scuffed or scored, the cylinder block should be rebored and honed, and new pistons and rings fitted. Whatever type of boring equipment is used, boring and honing operation should be closely coordinated with the fitting of pistons and rings in order that specified clearances may be maintained.

Measure the cylinder bore at three levels in directions A and B (Fig. 18). Top measurement should be 10 mm (3/8 inch) down and bottom measurement should be 10 mm (3/8 inch.) up from bottom of bore. Refer to Engine Specifications.

SIZING PISTONS

Piston and cylinder wall must be clean and dry. Piston diameter should be measured 90 degrees to piston pin about 17.5 mm (11/16 inch) from the bottom of the skirt as shown in (Fig. 19). Cylinder bores should be measured halfway down the cylinder bore and transverse to the engine crankshaft center line

SERVICE PROCEDURES (Continued)

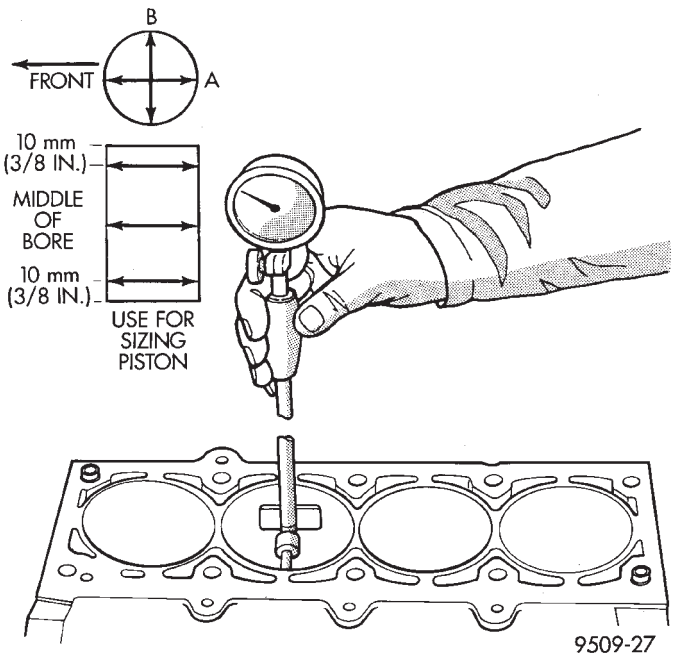

Fig. 18 Checking Cylinder Bore Size

shown in (Fig. 18). Refer to Engine Specifications. Correct piston to bore clearance must be established in order to assure quiet and economical operation.

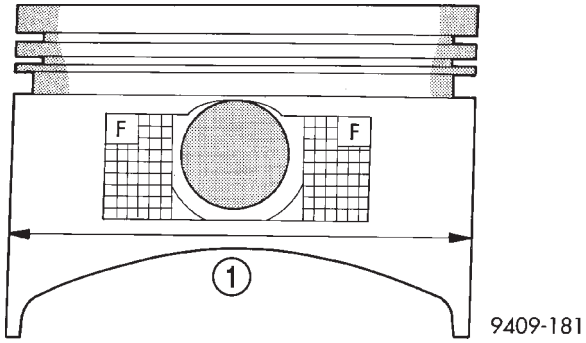

Fig. 19 Piston Measurements

1 – PISTON O.D. MEASUREMENT LOCATION

DaimlerChrysler engines use pistons designed specifically for each engine model. Clearance and sizing locations vary with respect to engine model.

NOTE: Pistons and cylinder bores should be measured at normal room temperature, 21°C (70°F).

CYLINDER BORE—HONING

(1) Used carefully, the cylinder bore resizing hone, recommended tool C-823 or equivalent, equipped with 220 grit stones, is the best tool for this honing procedure. In addition to deglazing, it will reduce taper and out-of-round as well as removing light scuffing, scoring or scratches. Usually a few strokes will clean up a bore and maintain the required limits.

(2) Deglazing of the cylinder walls may be done using a cylinder surfacing hone, recommended tool C-3501 or equivalent, equipped with 280 grit stones, if the cylinder bore is straight and round. 20–60 strokes depending on the bore condition, will be sufficient to provide a satisfactory surface. Use a light honing oil. **Do not use engine or transmission oil, mineral spirits or kerosene.** Inspect cylinder walls after each 20 strokes.

(3) Honing should be done by moving the hone up and down fast enough to get a cross-hatch pattern. When hone marks **intersect** at 50-60 degrees, the cross hatch angle is most satisfactory for proper seating of rings (Fig. 20).

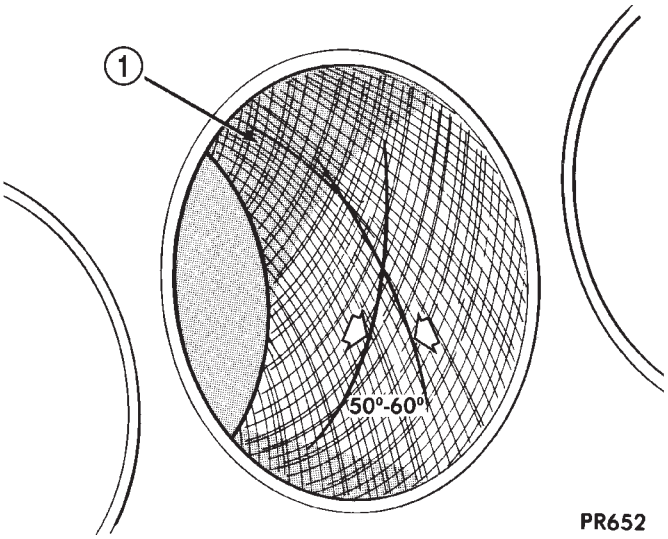

Fig. 20 Cylinder Bore Cross-Hatch Pattern

1 – CROSS-HATCH PATTERN

(4) A controlled hone motor speed between 200–300 RPM is necessary to obtain the proper cross-hatch angle. The number of up and down strokes per minute can be regulated to get the desired 50–60 degree angle. Faster up and down strokes increase the cross-hatch angle.

(5) After honing, it is necessary that the block be cleaned again to remove all traces of abrasive.

CAUTION: Ensure all abrasives are removed from engine parts after honing. It is recommended that a solution of soap and hot water be used with a brush and the parts then thoroughly dried. The bore can be considered clean when it can be wiped clean with a white cloth and cloth remains clean. Oil the bores after cleaning to prevent rusting.

SERVICE PROCEDURES (Continued)

PISTON RING—FITTING

(1) Wipe cylinder bore clean. Insert ring and push down with piston to ensure it is square in bore. The ring gap measurement must be made with the ring positioned below normal ring travel in the cylinder bore. Check gap with feeler gauge (Fig. 21). Refer to Engine Specifications in this section for piston ring specifications.

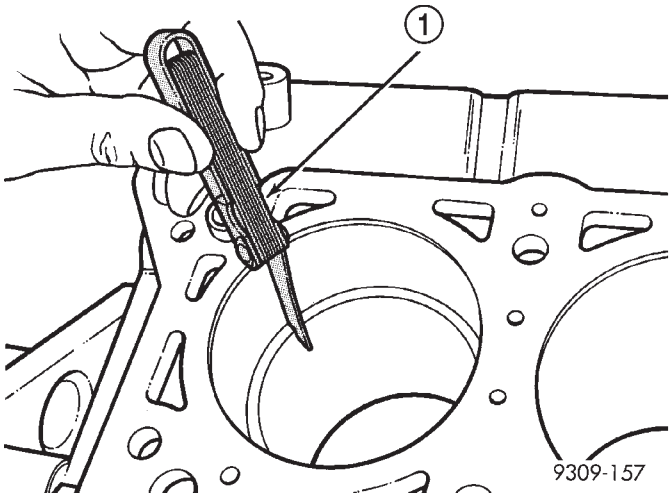

Fig. 21 Piston Ring Gap

1 – FEELER GAUGE

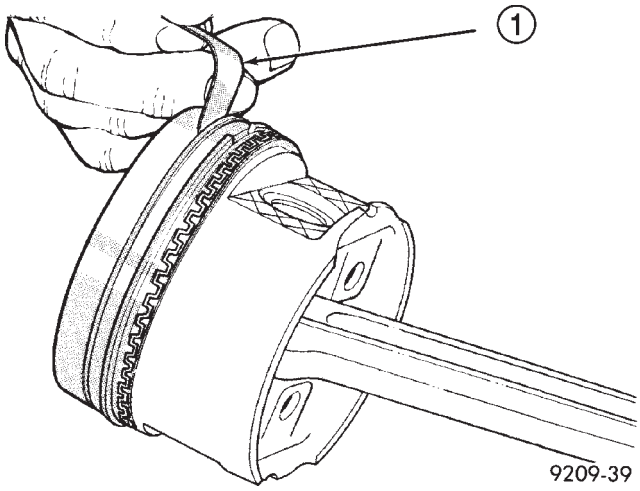

Fig. 22 Piston Ring Side Clearance

1 – FEELER GAUGE

(2) Check piston ring to groove side clearance (Fig. 22). Refer to Engine Specifications in this section for piston ring specifications.

CONNECTING ROD AND BEARING—FITTING

CONNECTING ROD BEARING CLEARANCE

Engine connecting rod bearing clearances can be determined by use of Plastigage or equivalent. The following is the recommended procedure for the use of Plastigage:

(1) Rotate the crankshaft until the connecting rod to be checked is at the bottom of its stroke.

(2) Remove oil film from surface to be checked. Plastigage is soluble in oil.

(3) Place a piece of Plastigage across the entire width of the bearing shell in the bearing cap approximately 6.35 mm (1/4 in.) off center and away from the oil hole. In addition, suspect areas can be checked by placing plastigage in that area.

(4) Assemble the rod cap with Plastigage in place. Tighten the rod cap to the specified torque. **Do not rotate the crankshaft while assembling the cap or the Plastigage may be smeared, giving inaccurate results.**

(5) Remove the bearing cap and compare the width of the flattened Plastigage with the scale provided on the package (Fig. 23). Locate the band closest to the same width. This band indicates the amount of oil clearance. Differences in readings between the ends indicate the amount of taper present. Record all readings taken. Refer to Engine Specifications. **Plastigage generally is accompanied by two scales. One scale is in inches, the other is a metric scale. If the bearing clearance exceeds wear limit specification, replace the bearing.**

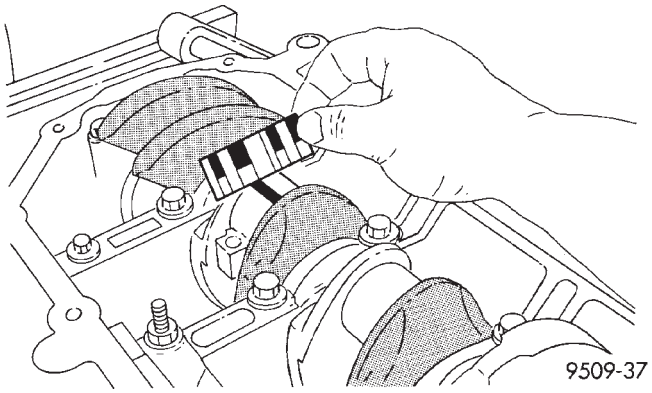

Fig. 23 Connecting Rod Bearing Clearance—Typical

NOTE: The rod bearing bolts should not be reused.

(1) Before installing the **NEW** bolts the threads should be oiled with clean engine oil.

(2) Install each bolt finger tight than alternately torque each bolt to assemble the cap properly.

(3) Tighten the bolts to 27 N·m PLUS 1/4 turn (20 ft. lbs. PLUS 1/4 turn) **Do not use a torque wrench for last step.**

(4) Using a feeler gauge, check connecting rod side clearance (Fig. 24). Refer to Engine Specifications in this section for connecting rod specifications.

SERVICE PROCEDURES (Continued)

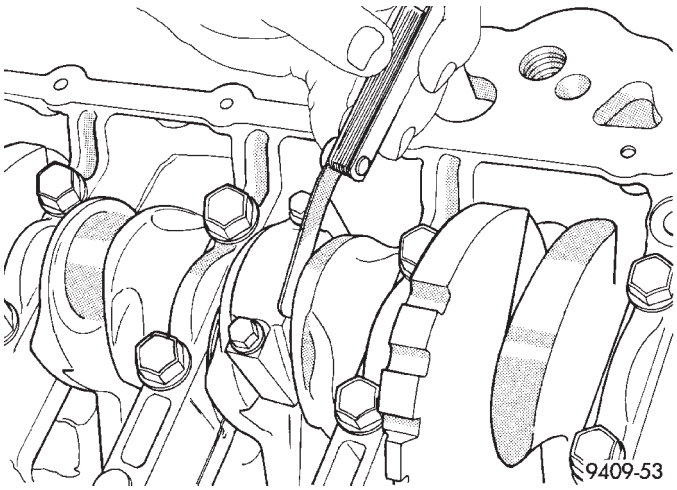

Fig. 24 Connecting Rod Side Clearance

CRANKSHAFT MAIN BEARING—FITTING

PLASTIGAGE PROCEDURE

Engine crankshaft bearing clearances can be determined by use of Plastigage or equivalent. The following is the recommended procedure for the use of Plastigage:

(1) Remove oil film from surface to be checked. Plastigage is soluble in oil.

(2) Place a piece of Plastigage across the entire width of the bearing shell in the cap approximately 6.35 mm (1/4 in.) off center and away from the oil holes (Fig. 25). (In addition, suspected areas can be checked by placing the Plastigage in the suspected area). Torque the bearing cap bolts of the bearing being checked to the proper specifications.

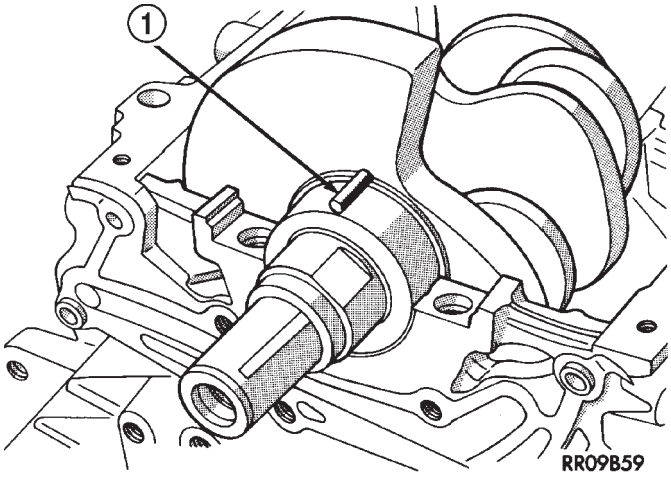

Fig. 25 Plastigage Placed in Lower Shell—Typical

1 – PLASTIC GAUGE

(3) Remove the bearing cap and compare the width of the flattened Plastigage with the metric scale provided on the package. Locate the band closest to the same width. This band shows the amount of clearance in thousandths of a millimeter. Differences in readings between the ends indicate the amount of taper present. Record all readings taken. Refer to Engine Specifications. **Plastigage generally is accompanied by two scales. One scale is in inches, the other is a metric scale.**

NOTE: Plastigage is available in a variety of clearance ranges. Use the most appropriate range for the specifications you are checking.

(4) Install the proper crankshaft main bearings to achieve the specified bearing clearances. Refer to Crankshaft, Removal and Installation procedure.

CRANKSHAFT END PLAY

DIAL INDICATOR METHOD

(1) Mount a dial indicator to front of engine, locating probe on nose of crankshaft (Fig. 26).

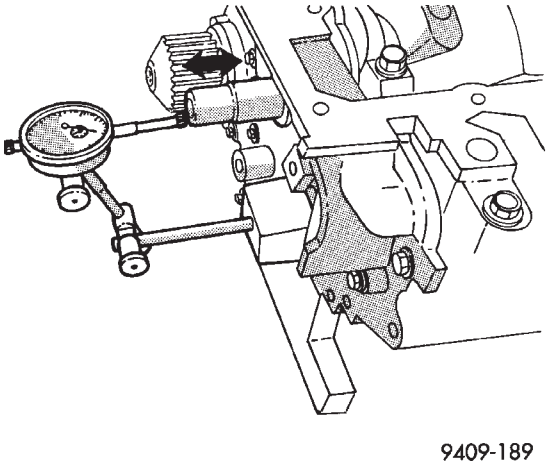

Fig. 26 Checking Crankshaft End Play— Dial Indicator

(2) Move crankshaft all the way to the rear of its travel.

(3) Zero the dial indicator.

(4) Move crankshaft all the way to the front of its travel and read the dial indicator. Refer to Engine Specifications in this section for crankshaft specifications.

FEELER GAGE METHOD

(1) Move crankshaft all the way to the rear of its travel using a lever inserted between a main bearing cap and a crankshaft cheek, using care not to damage any bearing surface. Do **not** loosen main bearing cap.

(2) Use a feeler gauge between number three thrust bearing and machined crankshaft surface to determine end play.

SERVICE PROCEDURES (Continued)

REPAIR OF DAMAGED OR WORN THREADS

Damaged or worn threads (including aluminum head spark plug threads) can be repaired. Essentially, this repair consists of drilling out worn or damaged threads, tapping the hole with a special Heli-Coil Tap, (or equivalent) and installing an insert into the tapped hole. This brings the hole back to its original thread size.

CAUTION: Be sure that the tapped holes maintain the original centerline.

Heli-Coil tools and inserts are readily available from automotive parts jobbers.

CAMSHAFT/CRANKSHAFT SYNCHRONIZATION

The camshaft and crankshaft synchronization procedure must be performed after a following component(s) replacement:

- Camshaft
- Camshaft Position Sensor
- Camshaft Sensor Target Magnet
- Crankshaft
- Cylinder Block
- Cylinder Head
- Water Pump
- Timing Belt and Timing Belt Tensioner
- Powertrain Control Module (PCM)

(1) Perform camshaft and crankshaft synchronization procedure as follows:

a. Connect the DRBIII® scan tool to the data link (diagnostic) connector. This connector is located in the passenger compartment; at the lower edge of instrument panel; near the steering column.

b. Turn the ignition switch on and access the “miscellaneous” screen.

c. Select “re-set values” option.

d. Perform cam/crank synchronization procedure following directions on DRBIII® screen.

REMOVAL AND INSTALLATION

TORQUE STRUTS

UPPER TORQUE STRUT

REMOVAL

(1) Remove bolts attaching strut to shock tower bracket and engine mount bracket (Fig. 27).

(2) Remove the upper torque strut.

INSTALLATION

(1) Position the upper torque strut into mounting locations.

(2) Install the mounting bolts and perform the torque strut adjustment procedure.

LOWER TORQUE STRUT

REMOVAL

(1) Raise vehicle on hoist.

(2) Remove right side splash shield.

(3) Remove pencil strut.

(4) Remove bolts attaching lower strut to crossmember and strut bracket (Fig. 27).

(5) Remove lower torque strut.

INSTALLATION

(1) Position lower torque strut into mounting locations.

(2) Install mounting bolts and perform torque strut adjustment procedure.

(3) Install pencil strut. Tighten nuts to 58 N·m (43 ft. lbs.).

(4) Install splash shield and lower vehicle

TORQUE STRUT ADJUSTMENT

The upper and lower torque struts need to be adjusted together to assure proper engine positioning and engine mount loading. Whenever a torque strut bolt(s) is loosened, this procedure must be performed.

(1) Loosen the upper and lower torque strut attaching bolt at the suspension crossmember and shock tower bracket.

(2) The engine position may now be adjusted by positioning a suitable floor jack on the forward edge of the transmission bell housing (Fig. 28).

NOTE: The floor jack must be positioned as shown in (Fig. 28) to prevent minimal upward lifting of the engine.

(3) Carefully apply upward force, allowing the upper engine to rotate rearward until the distance between the center of the rearmost attaching stud on the engine mount bracket (point “A”) and the center of the hole for the washer hose clip on the shock tower bracket (point “B”) is 119 mm (4.70 in.) (Fig. 29).

(4) With the engine held at the proper position, tighten both the upper and lower torque strut bolts to 118 N·m (87 ft. lbs.) (Fig. 27).

(5) Remove the floor jack.

REMOVAL AND INSTALLATION (Continued)

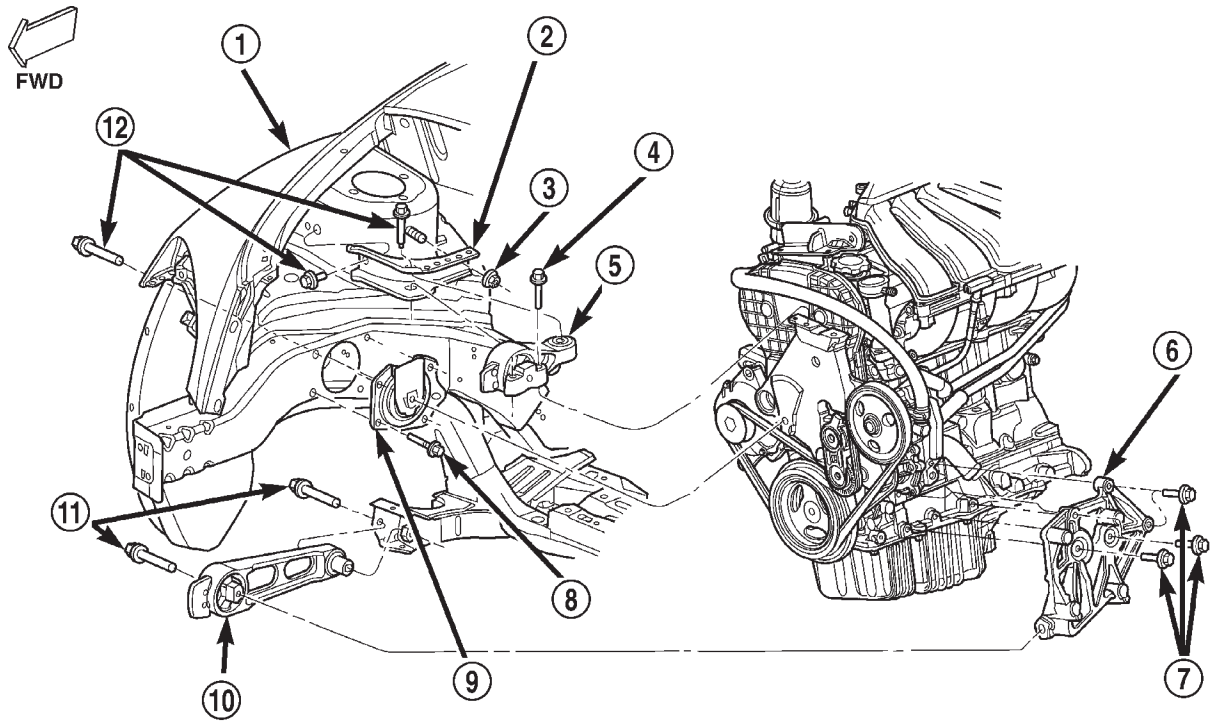

Fig. 27 Torque Struts—Upper and Lower

1 – RIGHT FENDER
2 – UPPER TORQUE STRUT BRACKET
3 – NUT
4 – BOLT
5 – UPPER TORQUE STRUT
6 – LOWER TORQUE STRUT BRACKET
7 – BOLTS
8 – BOLTS
9 – RIGHT ENGINE MOUNT
10 – LOWER TORQUE STRUT
11 – BOLTS
12 – BOLTS

ENGINE MOUNT—LEFT

REMOVAL

(1) Remove air cleaner assembly.
(2) Remove battery and tray.
(3) Support transaxle with a suitable jack.
(4) Remove mount to transaxle bolts (Fig. 30).
(5) Disconnect transaxle shift cable from left mount and transaxle linkage.
(6) Remove left mount bracket to body frame rail fasteners (Fig. 30).
(7) Remove mount.

INSTALLATION

(1) Install engine mount bracket to body frame rail and tighten fasteners to 28 N·m (250 in. lbs.) (Fig. 30).
(2) Position engine/transaxle for installation of mount to transaxle bolts. Install and tighten bolts to 118 N·m (87 ft. lbs.) (Fig. 30).
(3) Remove jack from under transaxle.
(4) Connect transaxle shift cable to engine mount and transaxle linkage.
(5) Install battery tray and battery.
(6) Install air cleaner assembly.

ENGINE MOUNT—RIGHT

REMOVAL

(1) Remove the engine assembly for the required clearance to access the engine mount. Refer to procedures in this section.

NOTE: The right engine mount attaching holes are slightly oversize to compensate for manufacturing tolerances. The mount has been set at the manufacturing plant for proper powertrain alignment. Therefore, it is necessary to mark the position of the mount before the attaching bolts are loosened.

(2) Using a permanent ink marker or equivalent, mark the position of engine mount to the body frame rail.

REMOVAL AND INSTALLATION (Continued)

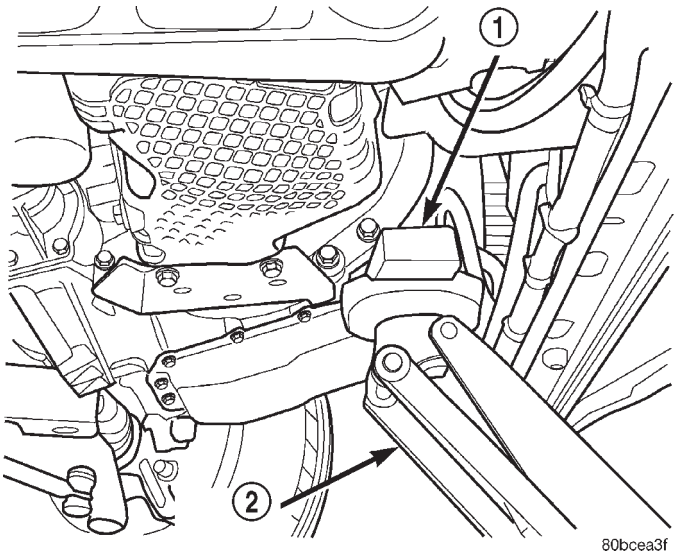

Fig. 28 Floor Jack Positioning

1 – WOOD BLOCK
2 – FLOOR JACK

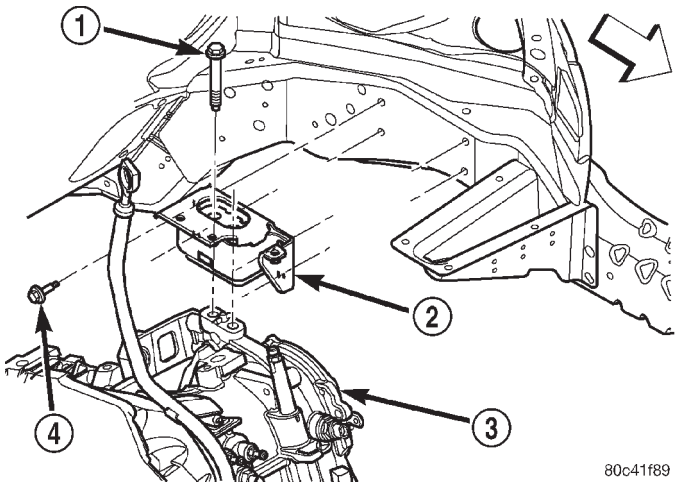

Fig. 30 Left Mount

1 – BOLT
2 – LEFT MOUNT
3 – TRANSAXLE
4 – BOLT

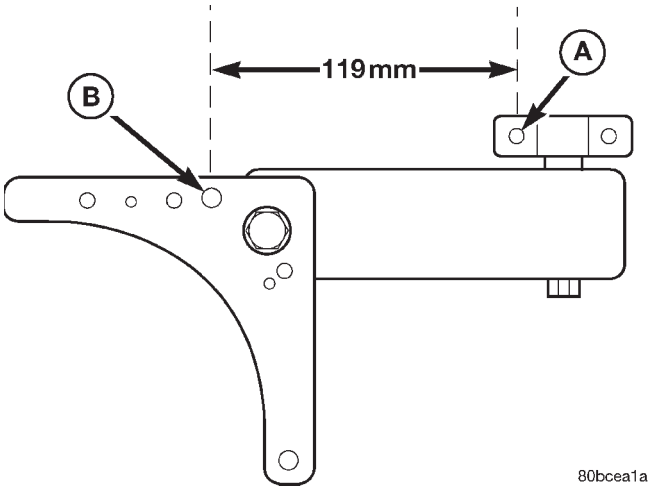

Fig. 29 Engine Position Measurement

(3) Remove bolts attaching mount to body (Fig. 31).

(4) Remove mount.

INSTALLATION

(1) Position mount into the original position on body frame rail (Fig. 31).

NOTE: Engine mount must be installed in the original position on body frame rail. If mount was not marked or frame rail was replaced, perform the following procedure.

(2) Perform the following procedure if the mount position was not previously marked, or the frame rail was replaced:

a. Insert new mount loosely in frame rail.

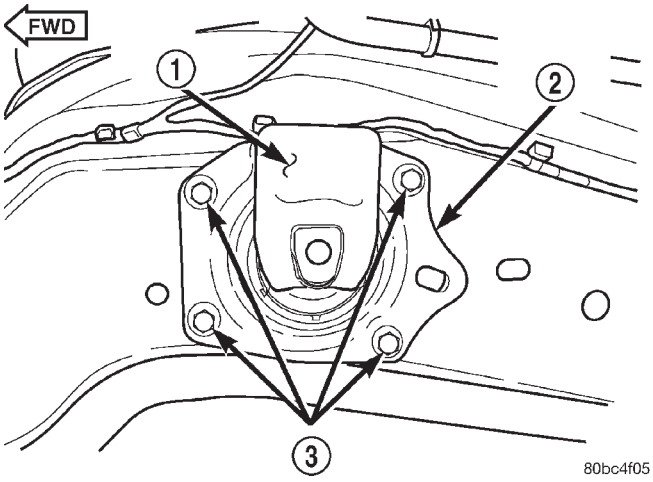

Fig. 31 Engine Mount—Right

1 – SNUBBER PAD
2 – RIGHT ENGINE MOUNT
3 – BOLTS

b. Align the four holes in the mount with the mating holes in the rail such that the holes are concentric (frame rail holes centered in the mount holes).

c. Using a permanent ink marker or equivalent, mark the position of engine mount to the body frame rail while maintaining mounting hole concentricity.

(3) Ensure the mount maintains originally marked position and install mount bolts. Tighten bolts to 28 N·m (250 in. lbs.) (Fig. 31).

(4) Install the engine assembly. Refer to procedures in this section.

REMOVAL AND INSTALLATION (Continued)

STRUCTURAL COLLAR

STRUCTURAL COLLAR—AUTOMATIC TRANSAXLE EQUIPPED

REMOVAL

(1) Raise vehicle on hoist.

(2) Remove bolts attaching bending strut to engine and transaxle (Fig. 32).

(3) Remove bolts attaching collar and strut to engine, oil pan, and transaxle (Fig. 32). Remove strut and collar.

INSTALLATION

CAUTION: Torque procedure for the structural collar and bending strut must be followed or damage could occur to oil pan, collar, and/or bending strut.

(1) Perform the following steps for installing structural collar and bending strut. Refer to (Fig. 32):

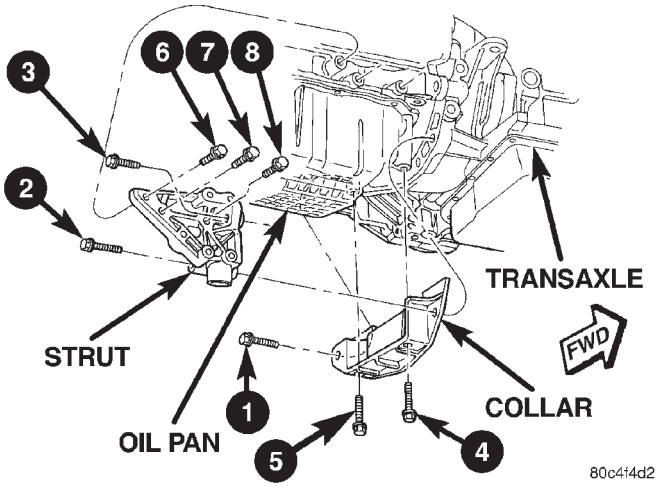

Fig. 32 Structural Collar and Bending Strut—(Automatic Transaxle Equipped)

- Step 1: Place collar into position between transaxle and oil pan. Install collar to transaxle bolt (1), **hand start only**.
- Step 2: Position power steering hose support bracket (Fig. 33) and install collar to oil pan bolt (4), **hand tight only.**
- Step 3: Position bending strut in place and **hand start only** bolt (3) into the upper transaxle hole.
- Step 4: Install bolt (2), through strut and collar, **hand start only**.
- Step 5: Install bolt (6), strut to cylinder block, **hand tight only.**
- Step 6: Position power steering hose support bracket (Fig. 33) and install the remaining collar to oil pan bolt (5), **hand tight only.**

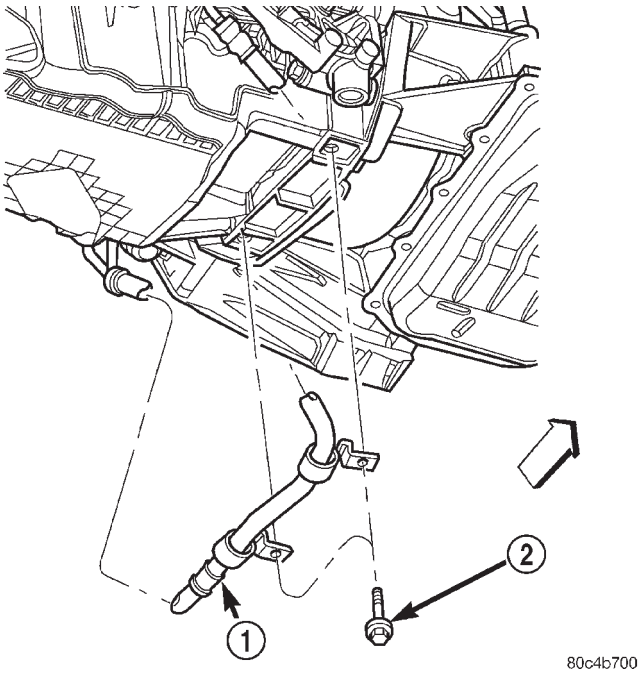

Fig. 33 Power Steering Hose To Structural Collar

1 – POWER STEERING HOSE
2 – BOLT

- Step 7: Final torque collar to transaxle bolts (1–3), to 101 N·m (75 ft. lbs.)
- Step 8: Install bolts (7) and (8), through strut and into cylinder block.
- Step 9: Final torque bolts (4–8) to 61 N·m (45 ft. lbs.).

(2) Lower vehicle.

STRUCTURAL COLLAR—MANUAL TRANSAXLE EQUIPPED

REMOVAL

(1) Raise vehicle on hoist.

(2) Remove bolts attaching bending strut to engine and transaxle (Fig. 34). Remove strut.

(3) Remove bolts attaching collar and clutch slave cylinder to transaxle (Fig. 34).

(4) Remove remaining bolts attaching collar to oil pan and transaxle (Fig. 34). Remove collar.

INSTALLATION

CAUTION: Torque procedure for the structural collar and bending strut must be followed or damage could occur to oil pan, collar, and/or bending strut.

(1) Perform the following steps for installing structural collar and bending strut. Refer to (Fig. 34):

- Step 1: Place collar into position between transaxle and oil pan. Install collar to transaxle bolt (1), **hand start only**.

REMOVAL AND INSTALLATION (Continued)

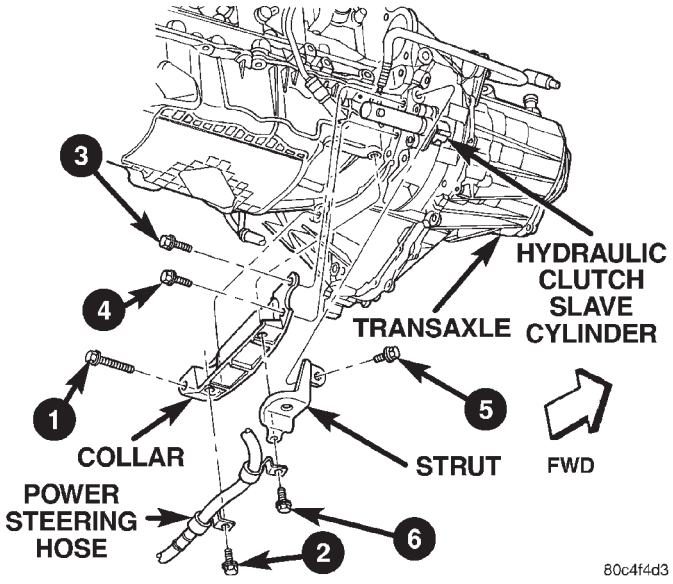

Fig. 34 Structural Collar and Bending Strut—(Manual Transaxle Equipped)

- Step 2: Position power steering hose support bracket (Fig. 34) and install collar to oil pan bolt (2), **hand tight only**.
- Step 3: Position clutch slave cylinder into mounting position and install bolts (3) and (4) **hand tight only**.
- Step 4: Position bending strut in place and **hand start only** bolt (5) into the upper transaxle hole.
- Step 5: Position power steering hose support bracket and install the remaining collar to oil pan bolt (6) **hand tight only**.
- Step 6: Final torque all bolts in sequence shown in (Fig. 34) to the following torque values:
- Bolts (1) and (5) to 101 N·m (75 ft. lbs.)
- Bolts (2) and (6) to 61 N·m (45 ft. lbs.)
- Bolts (3) and (4) to 28 N·m (20 ft. lbs.)

(2) Lower vehicle.

ENGINE ASSEMBLY

REMOVAL

(1) Perform fuel pressure release procedure, then disconnect and remove fuel line. Refer to FUEL SYSTEM for procedure.

(2) Remove air cleaner housing assembly and clean air hose.

(3) Disconnect both cables from battery.

(4) Remove battery hold down clamp and bolt, and remove battery (Fig. 35).

(5) Remove battery tray (Fig. 36).

(6) Drain cooling system. Refer to COOLING SYSTEM for procedure.

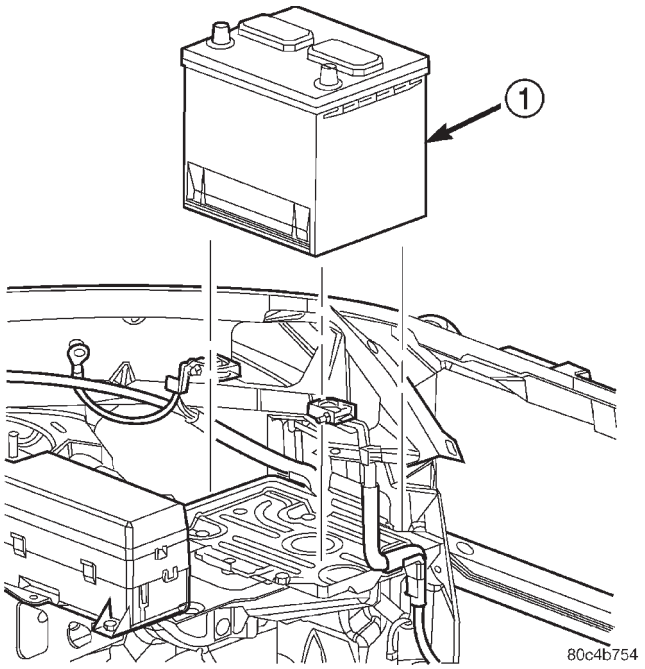

Fig. 35 Battery—Removal/Installation

1 – BATTERY

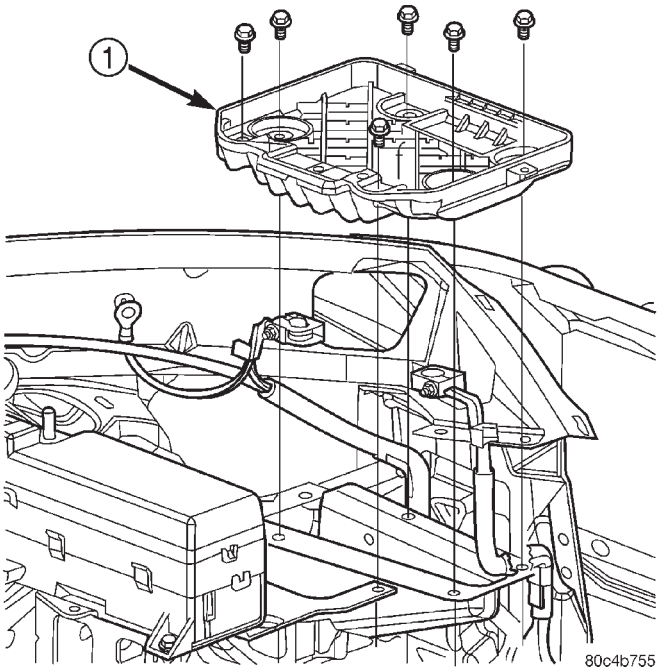

Fig. 36 Battery Tray—Removal/Installation

1 – BATTERY TRAY

(7) Discharge air conditioning system, if equipped. Refer to HEATING AND AIR CONDITIONING for procedure.

(8) Disconnect throttle and speed control cables.

(9) Disconnect engine wiring harness at Powertrain Control Module (PCM) connector.

REMOVAL AND INSTALLATION (Continued)

(10) Disconnect positive cable from Power Distribution Center (PDC) and ground wire from vehicle body. Remove bolts attaching PDC and set aside (Fig. 37).

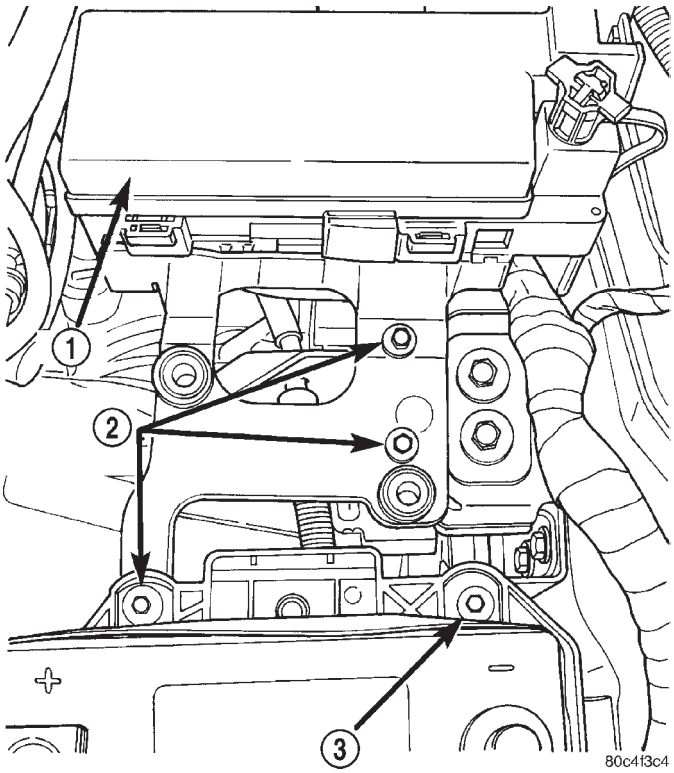

Fig. 37 PDC Bracket Attaching Bolts

1 – PDC
2 – PDC BRACKET BOLTS
3 – BATTERY TRAY BOLT

(11) Disconnect wiring connectors at lower battery tray support.

(12) Disconnect ground wire from the vehicle body-to-engine at the right side strut tower.

(13) Disconnect brake booster vacuum hose from intake manifold.

(14) Disconnect the proportional purge hoses from intake manifold.

(15) Disconnect coolant reserve/recovery hose from coolant outlet connector.

(16) Disconnect heater hoses.

(17) Remove upper radiator support crossmember. Refer to BODY for procedure.

(18) Remove upper radiator hose.

(19) Remove lower radiator hose.

(20) Disconnect upper A/C line from A/C condenser. Refer to HEATING AND AIR CONDITIONING for procedure.

(21) Disconnect A/C lines at junction near upper torque strut. Refer to HEATING AND AIR CONDITIONING for procedure.

(22) Disconnect automatic transmission cooler lines and plug, if equipped.

(23) Disconnect fan electrical connector and remove cooling module assembly (fan, radiator, A/C condenser). Refer to COOLING SYSTEM for procedure

(24) Disconnect shift linkage and transaxle electrical connectors. Refer to TRANSAXLE for procedure.

(25) Disconnect clutch hydraulic line at quick-disconnect fitting (Fig. 38) using Special Tool 6638 (if manual transaxle equipped) (Fig. 39).

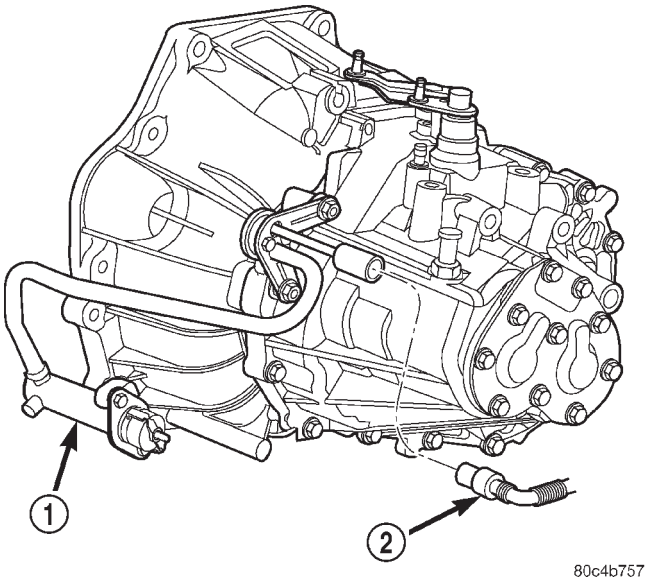

Fig. 38 Clutch Hydraulic Line to Slave Cylinder— (Manual Transaxle Equipped)

1 – SLAVE CYLINDER
2 – HYDRAULIC TUBE

(26) Hoist vehicle and remove front wheels.

(27) Remove right inner splash shield.

(28) Remove axle shafts. Refer to DIFFERENTIAL AND DRIVELINE for procedure.

(29) Remove accessory drive belts. Refer to COOLING SYSTEM for procedure.

(30) Remove generator and support brackets.

(31) Drain engine oil.

(32) Disconnect the downstream oxygen sensor connector.

(33) Disconnect exhaust system from manifold (Fig. 40).

(34) Disconnect power steering pressure hose from steering gear (Fig. 41).

(35) Remove lower engine torque strut. Refer to procedure in this section.

(36) Remove structural collar. Refer to procedure in this section.

(37) Remove torque converter bolts.

(38) Lower vehicle and remove A/C compressor.

REMOVAL AND INSTALLATION (Continued)

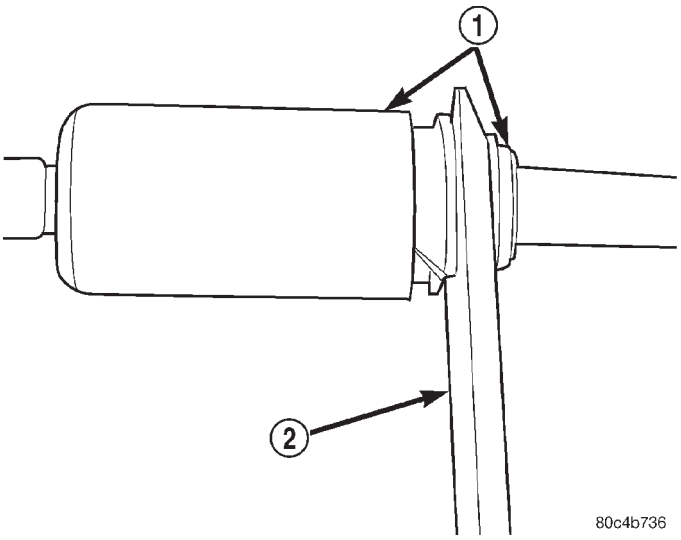

Fig. 39 Disconnecting Clutch Hydraulic Line— (Manual Transaxle Equipped)

1 – QUICK CONNECT FITTING
2 – TOOL 6638A

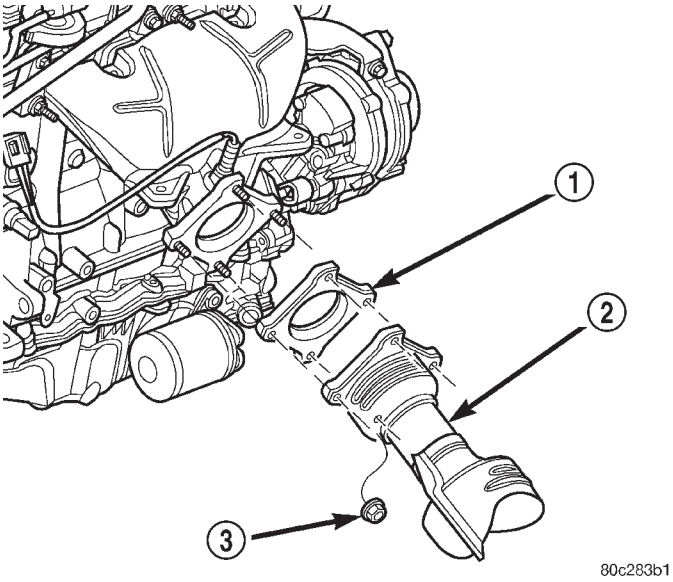

Fig. 40 Exhaust System To Manifold Connection

1 – GASKET
2 – CATALYTIC CONVERTER
3 – NUT

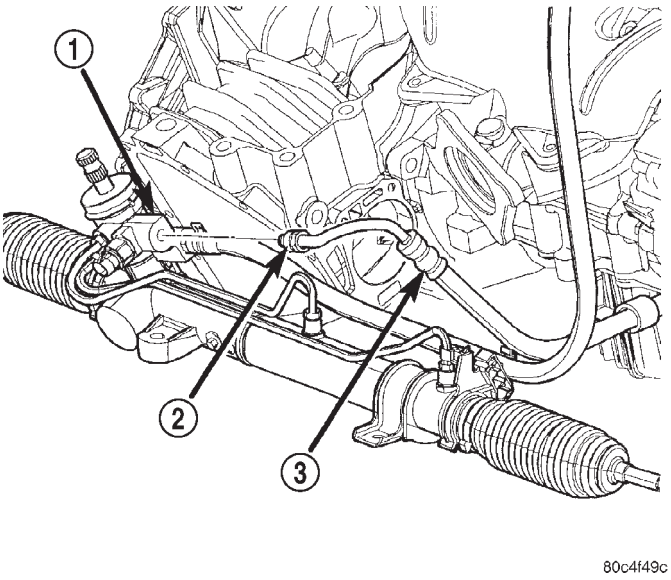

Fig. 41 Power Steering Fluid Pressure Hose

1 – STEERING GEAR
2 – FITTING
3 – POWER STEERING PRESSURE HOSE

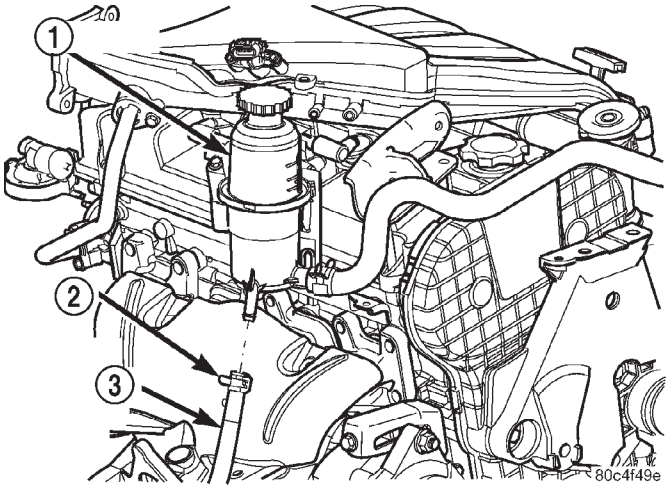

Fig. 42 Power Steering Fluid Return Hose

1 – RESERVOIR
2 – CLAMP
3 – POWER STEERING RETURN LINE

(39) Disconnect power steering fluid return line from reservoir (Fig. 42).

(40) Remove power steering pump. Refer to STEERING for procedure.

(41) Raise vehicle enough to allow engine dolly and cradle, Special Tools 6135 and 6710 to be installed under vehicle.

(42) Loosen engine support posts to allow movement for positioning onto engine locating holes and flange on the engine bedplate. Lower vehicle and position cradle until the engine is resting on support posts (Fig. 45). Tighten mounts to cradle frame. This will keep support posts from moving when removing or installing engine and transmission.

(43) Install safety straps around the engine to cradle (Fig. 45). Tighten straps and lock them into position.

WARNING: Safety straps MUST be used.

REMOVAL AND INSTALLATION (Continued)

(44) Raise vehicle enough to determine if straps are secure enough to hold cradle assembly to engine.

(45) Lower vehicle so weight of the engine and transmission ONLY is on the cradle assembly.

(46) Remove the upper engine torque strut.

(47) Remove right mount through bolt (Fig. 43) and left mount attaching bolts (Fig. 44)

(48) Raise vehicle slowly until engine/transaxle assembly clears engine compartment. It may be necessary to move the engine/transmission assembly with the cradle to allow for removal around body flanges.

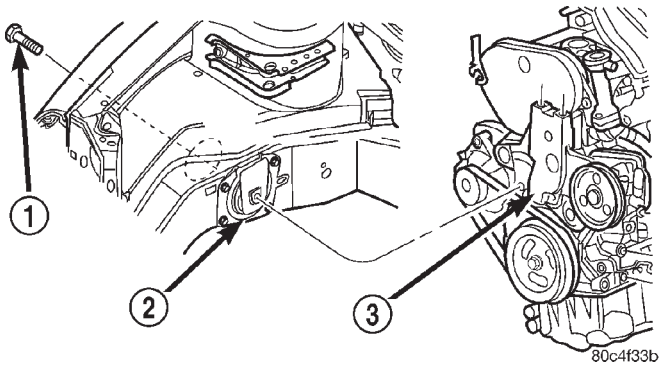

Fig. 43 Right Mount Through Bolt

1 – BOLT
2 – RIGHT ENGINE MOUNT
3 – ENGINE MOUNT BRACKET

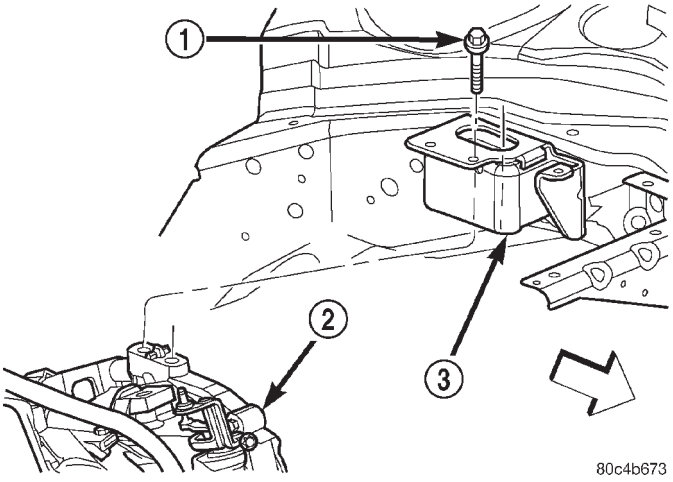

Fig. 44 Left Mount Bolts

1 – BOLT
2 – TRANSAXLE
3 – LEFT MOUNT

INSTALLATION

(1) Position engine and transmission assembly under vehicle and slowly lower the vehicle over the engine/transaxle assembly.

(2) Continue lowering vehicle until engine/transaxle aligns to mounting locations. Install mounting bolts at the right and left engine/transaxle mounts (Fig. 43) and (Fig. 44). Tighten bolts to 118 N·m (87 ft. lbs.).

(3) Install upper torque strut. Refer to procedure in this section.

(4) Remove safety straps from engine/transaxle assembly. Slowly raise vehicle enough to remove the engine dolly and cradle.

(5) Install generator and mounting brackets.

(6) Install axle shafts. Refer to DIFFERENTIAL AND DRIVELINE for procedure.

(7) Install structural collar. Refer to procedure in this section for tightening sequence.

(8) Install lower engine torque strut. Refer to procedure in this section.

(9) Connect exhaust system to manifold (Fig. 40).

(10) Connect the downstream oxygen sensor.

(11) Connect power steering fluid pressure hose to steering gear (Fig. 41).

(12) Install A/C compressor and hoses. Refer to HEATING AND AIR CONDITIONING for procedure.

(13) Install power steering pump. Refer to STEERING for procedure.

(14) Install accessory drive belts. Refer to COOLING SYSTEM for belt tension adjustment.

(15) Install inner splash shield.

(16) Install wheels and lower vehicle.

(17) Connect power steering fluid return hose to reservoir (Fig. 42). Fill power steering fluid reservoir to proper level.

(18) **Manual Transmission:** Connect clutch hydraulic line (Fig. 38), electrical connector and shift linkages.

NOTE: It is not necessary to bleed the clutch hydraulic system. The quick-connect fittings close immediately after disconnection; allowing no fluid to escape.

(19) **Automatic Transmission:** Connect shift linkage and cooler lines.

(20) Connect fuel line and heater hoses.

(21) Install all ground straps and connect engine wiring harness. Refer to WIRING DIAGRAMS.

(22) Install lower radiator hose, fan module, and upper radiator hose. Refer to COOLING SYSTEM for procedures.

(23) Position PDC and install bolts (Fig. 37). Connect positive battery cable to PDC and ground wire to vehicle body.

(24) Install battery tray (Fig. 36) and battery (Fig. 35).

(25) Connect cables to battery.

(26) Install air cleaner housing assembly and connect clean air hose to intake manifold.

(27) Connect throttle and speed control cables.

REMOVAL AND INSTALLATION (Continued)

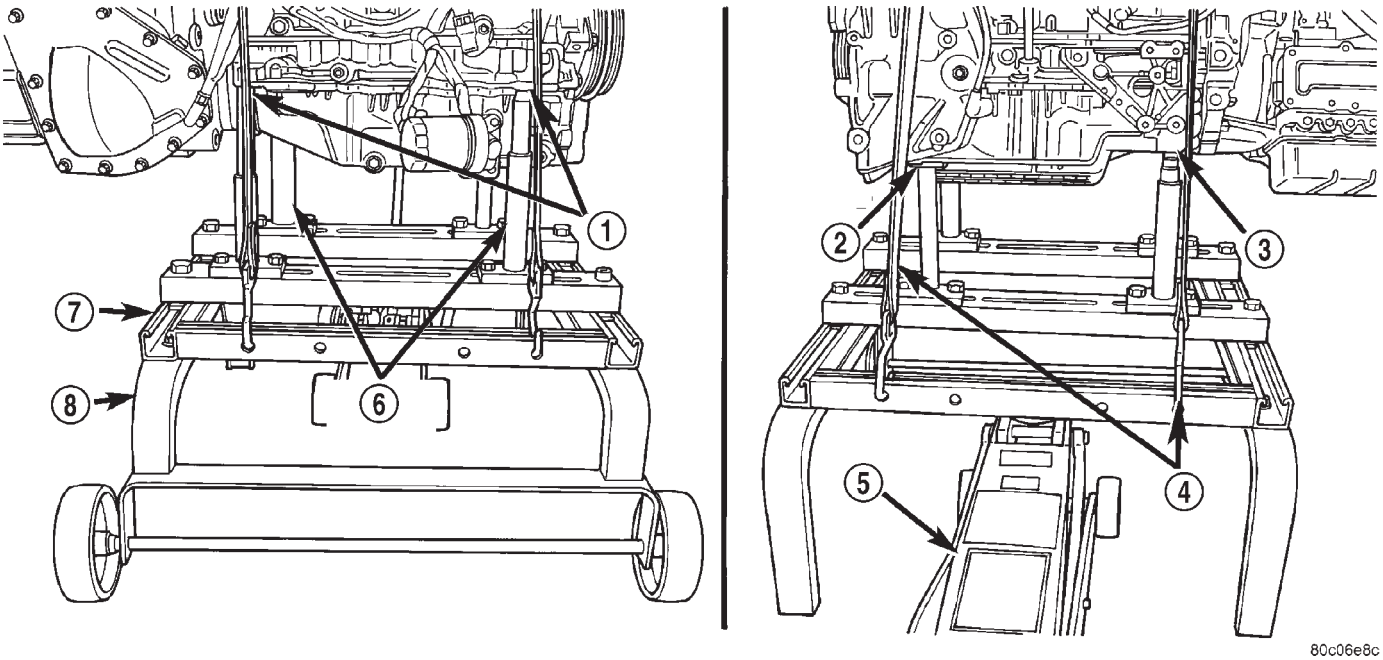

Fig. 45 Positioning Engine Cradle Support Post

1 – POST LOCATING HOLES IN BLOCK
2 – POST POSITIONED UNDER BRACKET
3 – POST LOCATING HOLE IN STRUT
4 – SAFETY STRAPS
5 – FLOOR JACK
6 – SPECIAL TOOL 6848
7 – SPECIAL TOOL 6710
8 – SPECIAL TOOL 6135

(28) Install oil filter. Fill engine crankcase with proper oil to correct level.

(29) Fill cooling system. Refer to COOLING SYSTEM for filling procedure.

(30) Perform camshaft and crankshaft synchronization procedure. Refer to procedure in this section.

(31) Start engine and run until operating temperature is reached.

(32) Ensure engine is properly positioned. Refer to Torque Struts in this section for adjustment procedure.

(33) Adjust transmission linkage, if necessary.

INTAKE MANIFOLD—UPPER

REMOVAL

(1) Disconnect intake air temperature sensor and make-up air hose from clean air hose (Fig. 46).

(2) Remove air cleaner housing and clean air hose assembly.

(3) Disconnect negative cable from battery.

(4) Remove throttle and speed control cables from throttle lever and bracket. Refer to FUEL SYSTEM for procedures.

(5) Disconnect manifold absolute pressure (MAP) sensor, idle air control (IAC) motor and throttle position sensor (TPS) wiring connectors (Fig. 47).

(6) Disconnect proportional purge hoses (Fig. 48).

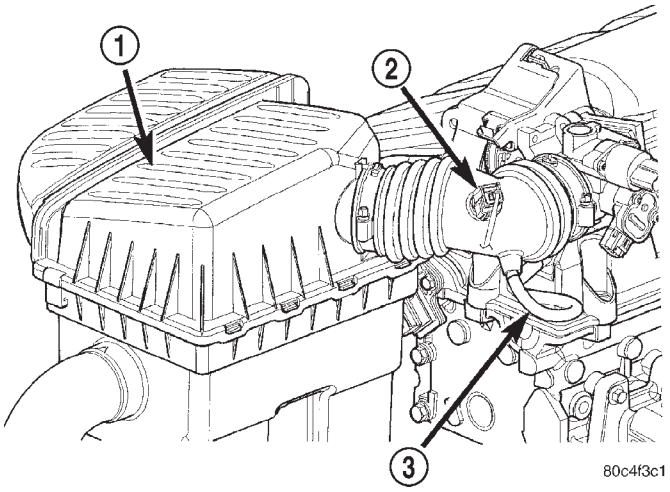

Fig. 46 Clean Air Hose

1 – AIR CLEANER HOUSING
2 – INLET AIR TEMPERATURE SENSOR
3 – MAKE-UP AIR HOSE

(7) Disconnect PCV and brake booster hoses.

(8) Remove throttle body support bracket fastener at the throttle body (Fig. 50).

(9) Remove upper intake manifold fasteners (Fig. 52).

(10) Remove upper intake manifold.

REMOVAL AND INSTALLATION (Continued)

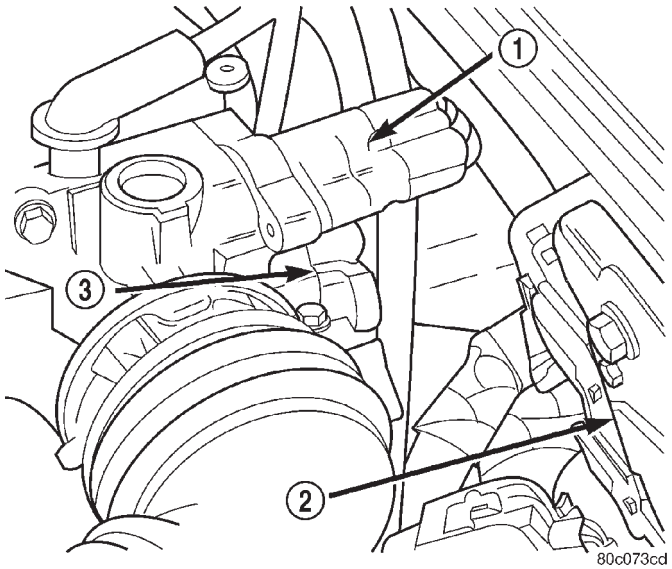

Fig. 47 Idle Air Control (IAC) Motor and Throttle Position Sensor (TPS) Wiring Connectors

1 – IAC
2 – PCM
3 – TPS

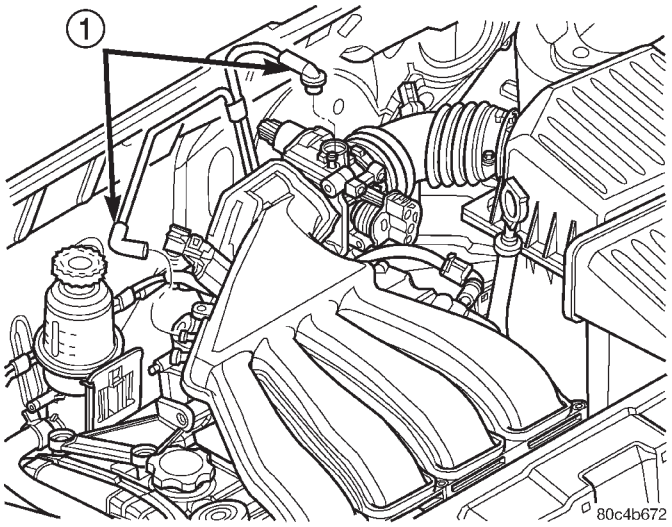

Fig. 48 Proportional Purge Hoses

1 – PROPORTIONAL PURGE HOSES

(11) If further service is required, cover the lower intake manifold openings to prevent foreign materials from entering the engine (Fig. 51).

INSTALLATION

(1) Clean all sealing surfaces. Replace seals as necessary.

(2) Position new seals on manifold, if replaced.

(3) Position upper intake manifold on lower intake manifold. Tighten upper intake manifold fasteners to 12 N·m (105 in. lbs.) in sequence shown in (Fig. 52).

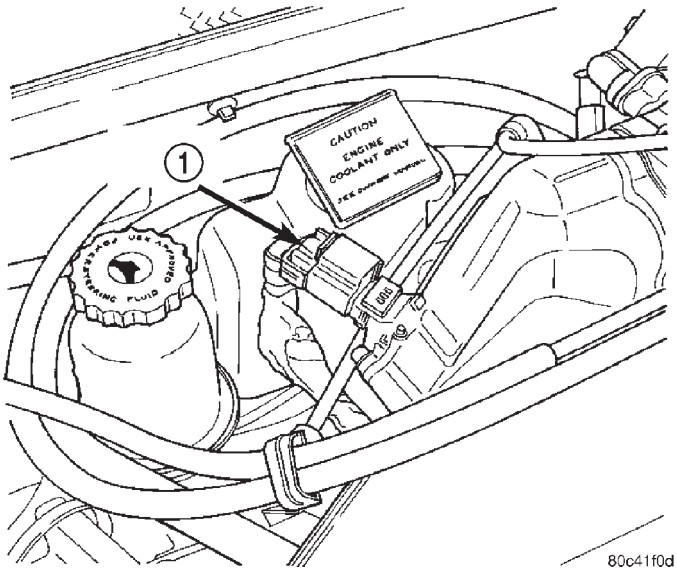

Fig. 49 MAP Sensor

1 – MAP SENSOR

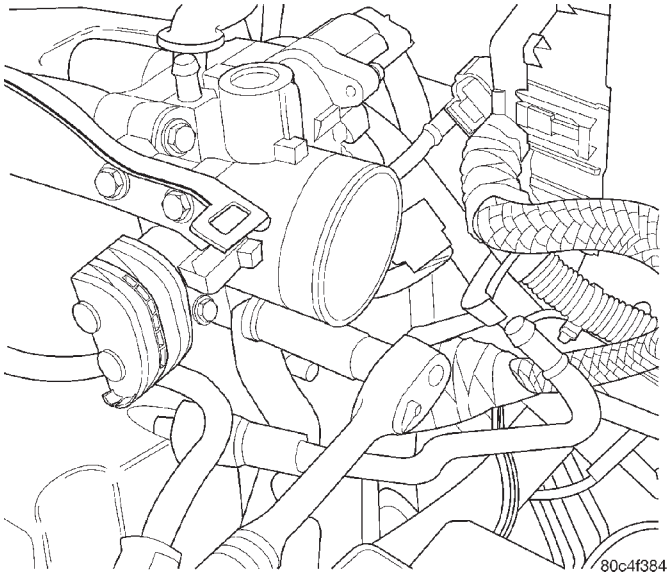

Fig. 50 Throttle Body Support Bracket

(4) Install throttle body support bracket bolt at throttle body (Fig. 50).

(5) Connect PCV and brake booster hoses (Fig. 48).

(6) Connect manifold absolute pressure (MAP) electrical connector, vapor canister hose, and brake booster hose (Fig. 49).

(7) Connect Idle Air Control (IAC) motor and Throttle Position Sensor (TPS) wiring connectors (Fig. 47).

(8) Install throttle and speed control cables to bracket. Connect cables to the throttle lever. Refer to FUEL SYSTEM for throttle body installation procedure.

(9) Connect negative cable to battery.

REMOVAL AND INSTALLATION (Continued)

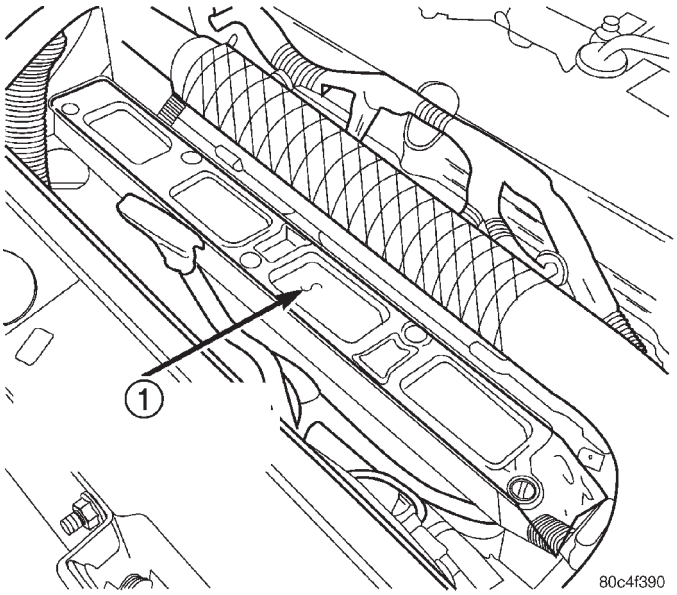

Fig. 51 Cover Lower Intake Manifold Openings

1 – INTAKE MANIFOLD MUST BE COVERED DURING SERVICE

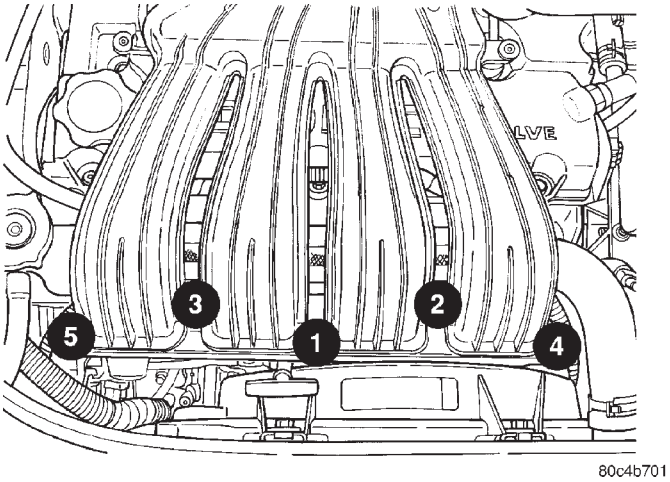

Fig. 52 Intake Manifold Tightening Sequence

(10) Install air cleaner housing and clean air hose. Tighten clean air hose clamp to 1.7 N·m (15 in. lbs.).

(11) Connect make-up air hose and intake air temperature sensor (Fig. 46).

INTAKE MANIFOLD—LOWER

REMOVAL

WARNING: RELEASE FUEL SYSTEM PRESSURE BEFORE SERVICING SYSTEM COMPONENTS. SERVICE VEHICLES IN WELL VENTILATED AREAS AND AVOID IGNITION SOURCES. NEVER SMOKE WHILE SERVICING THE VEHICLE.

(1) Perform fuel system pressure release procedure **before attempting any repairs.** Refer to FUEL SYSTEM for procedure.

(2) Disconnect intake air temperature sensor.

(3) Remove air filter housing and air inlet tube.

(4) Disconnect negative cable from battery.

(5) Remove upper intake manifold. Refer to procedure in this section.

(6) Drain cooling system below upper radiator hose level. Refer to COOLING SYSTEM for procedure.

(7) Remove upper radiator hose.

(8) Disconnect the fuel supply line quick connect at the fuel rail assembly. Refer to FUEL SYSTEM for procedure.

WARNING: WRAP SHOP TOWELS AROUND HOSE TO CATCH ANY GASOLINE SPILLAGE.

(9) Disconnect fuel injector wiring harness.

(10) Remove screw attaching the oil dipstick tube to lower intake manifold (Fig. 53).

(11) Remove lower intake manifold fasteners (Fig. 55).

(12) Remove lower intake manifold.

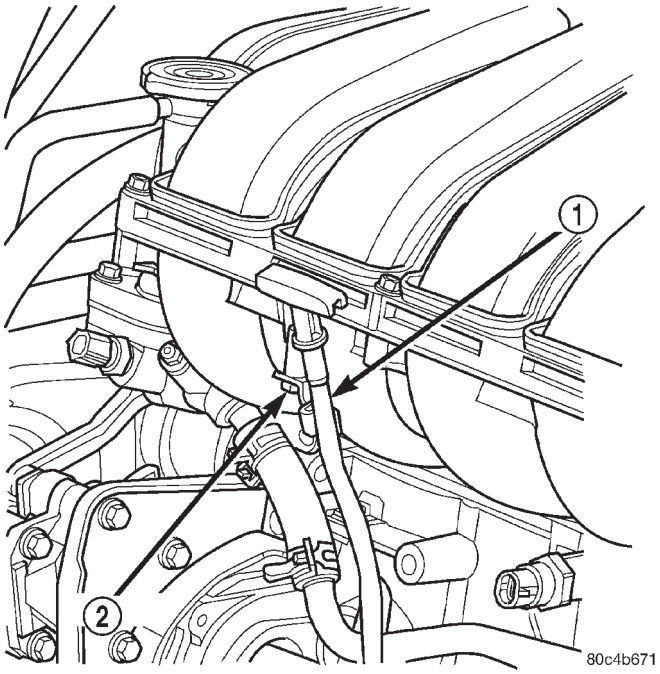

Fig. 53 Dipstick Tube

1 – DIPSTICK TUBE
2 – SCREW

INSTALLATION

(1) Clean all gasket surfaces. Inspect gasket and replace as necessary.

(2) Position new seals on lower intake manifold, if replaced (Fig. 54).

REMOVAL AND INSTALLATION (Continued)

(3) Install lower intake manifold. Tighten fasteners to 12 N·m (105 in. lbs.) in sequence shown in (Fig. 55).

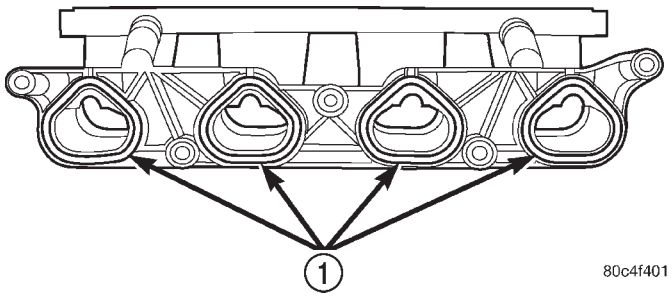

Fig. 54 Lower Intake Manifold Seals

1 – SEALS

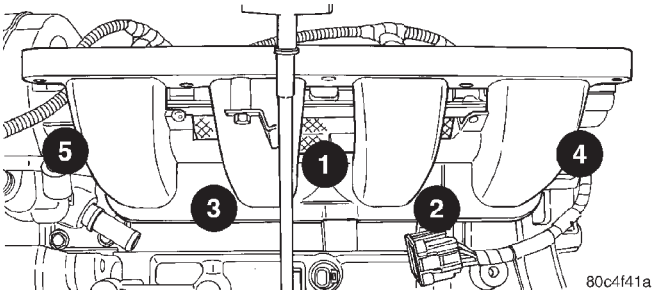

Fig. 55 Lower Intake Manifold Tightening Sequence

(4) If removed, install the fuel rail assembly to intake manifold. Tighten screws to 23 N·m (200 in. lbs.).

(5) Connect fuel injector wiring harness.

(6) Inspect quick connect fittings for damage, replace if necessary. Refer to FUEL SYSTEM for procedure. Lubricate tube with clean engine oil. Connect fuel supply hose to fuel rail assembly. Check connection by pulling on connector to insure it locked into position.

(7) Install the screw attaching the oil dipstick tube to lower intake manifold (Fig. 53).

(8) Install upper radiator hose.

(9) Install upper intake manifold. Refer to procedures in this section.

(10) Connect negative cable to battery.

(11) Install air filter housing and air inlet tube.

(12) Fill the cooling system. Refer to COOLING SYSTEM for procedure.

(13) With the DRB scan tool use ASD Fuel System Test to pressurize system to check for leaks.

CAUTION: When using the ASD Fuel System Test, the Auto Shutdown (ASD) relay will remain energized for 7 minutes or until the ignition switch is turned to the OFF position, or Stop All Test is selected.

EXHAUST MANIFOLD

REMOVAL

(1) Remove clean air hose and air cleaner housing.

(2) Disconnect negative cable from battery.

(3) Disconnect throttle and speed control cables from the throttle lever and bracket. Refer to FUEL SYSTEM for procedure.

(4) Disconnect MAP sensor electrical connector.

(5) Remove power steering fluid reservoir from mounting bracket (Fig. 56).

(6) Remove coolant recovery bottle. Refer to COOLING SYSTEM for procedure.

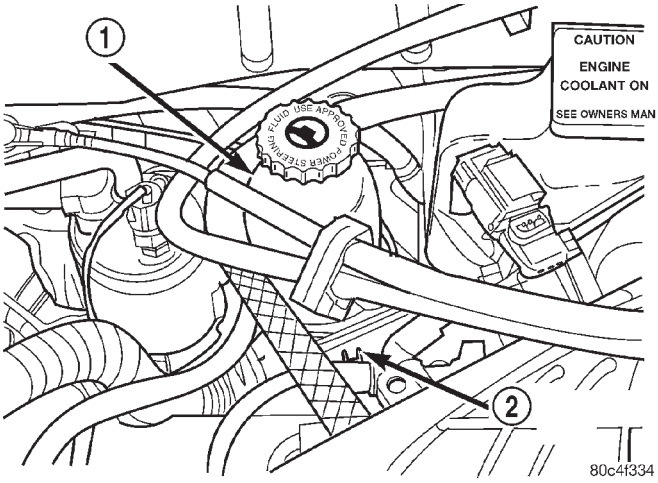

Fig. 56 Power Steering Fluid Reservoir

1 – POWER STEERING FLUID RESERVOIR

2 – RETAINING TAB

(7) Remove bolts attaching upper heat shield (Fig. 57).

(8) Remove upper heat shield.

(9) Raise vehicle.

(10) Disconnect exhaust pipe from manifold (Fig. 59).

(11) Remove engine wiring heat shield (Fig. 60).

(12) Remove manifold support bracket (Fig. 58).

(13) Remove lower exhaust manifold heat shield (Fig. 57).

(14) Disconnect oxygen sensor electrical connector.

(15) Remove exhaust manifold lower retaining fasteners.

(16) Lower vehicle and remove the upper exhaust manifold retaining fasteners

(17) Remove exhaust manifold (Fig. 62) from above; between the engine and cowl panel.

(18) Remove and discard manifold gasket.

INSTALLATION

(1) Install a new exhaust manifold gasket. **DO NOT APPLY SEALER**.

REMOVAL AND INSTALLATION (Continued)

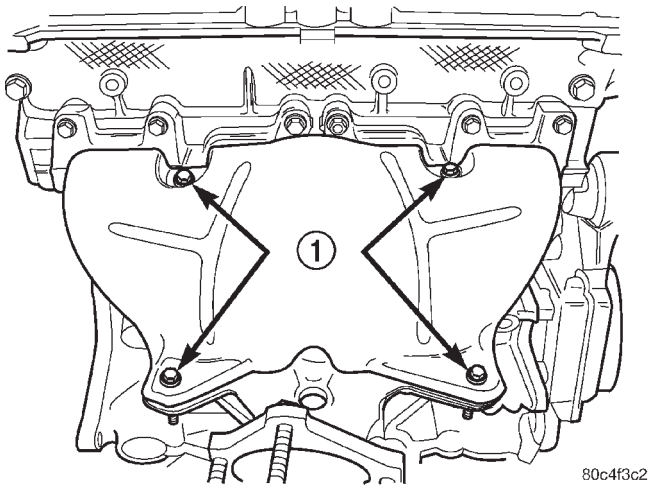

Fig. 57 Exhaust Manifold Heat Shield Bolts

1 – BOLTS

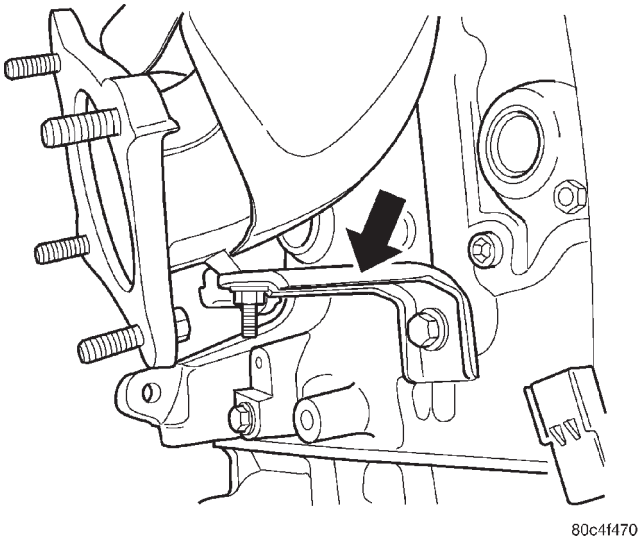

Fig. 58 Exhaust Manifold Support Bracket

(2) Position exhaust manifold in place. Tighten fasteners, starting at center and progressing outward in both directions to 23 N·m (200 in. lbs.). Raise and lower vehicle for fastener access as necessary. Repeat tightening procedure until all fasteners are at specified torque.

(3) Install exhaust manifold heat shields (Fig. 61). Tighten bolts to 12 N·m (105 in. lbs.) (Fig. 57).

(4) Install exhaust manifold support bracket (Fig. 58).

(5) Install engine wiring heat shield (Fig. 60).

(6) Connect oxygen sensor electrical connector.

(7) Install exhaust pipe to manifold (Fig. 59). Tighten fasteners to 28 N·m (250 in. lbs.).

(8) Install coolant recovery bottle. Refer to COOLING SYSTEM for procedure.

(9) Install power steering fluid reservoir to mounting bracket (Fig. 56).

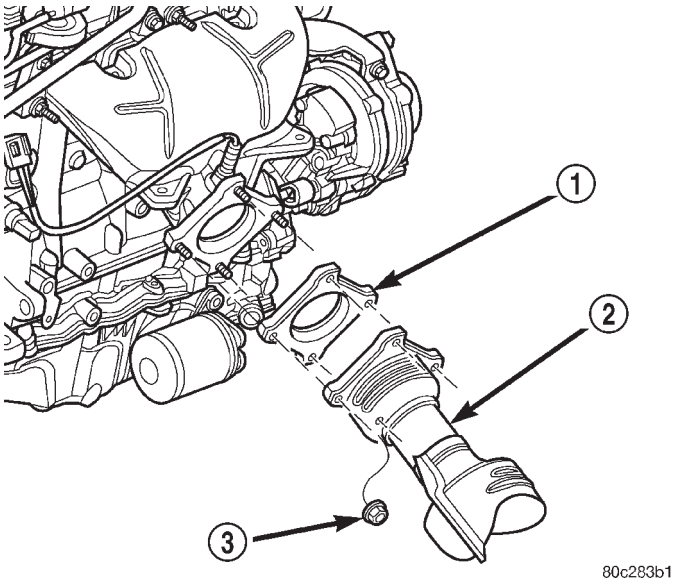

Fig. 59 Exhaust Manifold To Pipe Connection

1 – GASKET
2 – CATALYTIC CONVERTER
3 – NUT

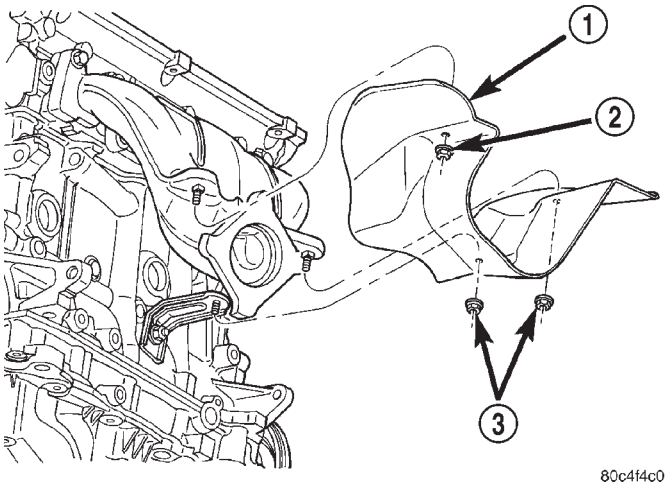

Fig. 60 Heat Shield—Engine Wiring

1 – HEAT SHIELD
2 – NUT
3 – NUT

(10) Connect MAP sensor electrical connector.

(11) Connect throttle and speed control cables to the throttle lever and bracket. Refer to FUEL SYSTEM for procedure.

(12) Connect negative cable to battery.

(13) Install clean air hose and air cleaner housing.

REMOVAL AND INSTALLATION (Continued)

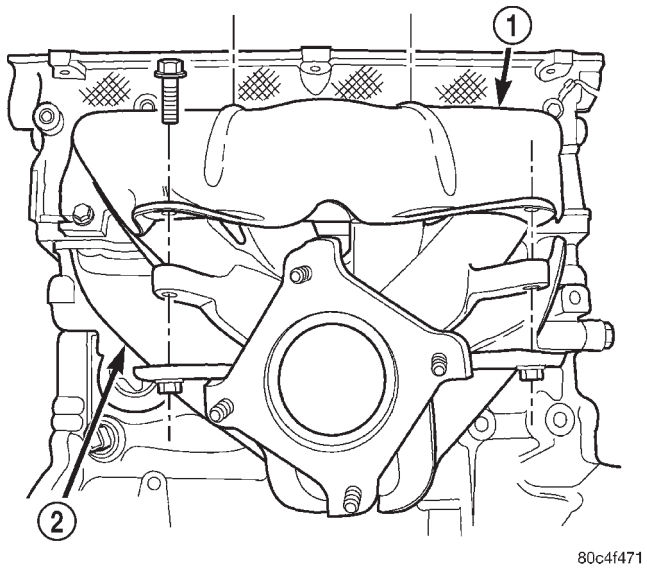

Fig. 61 Exhaust Manifold Heat Shields

1 – UPPER HEAT SHIELD
2 – LOWER HEAT SHIELD

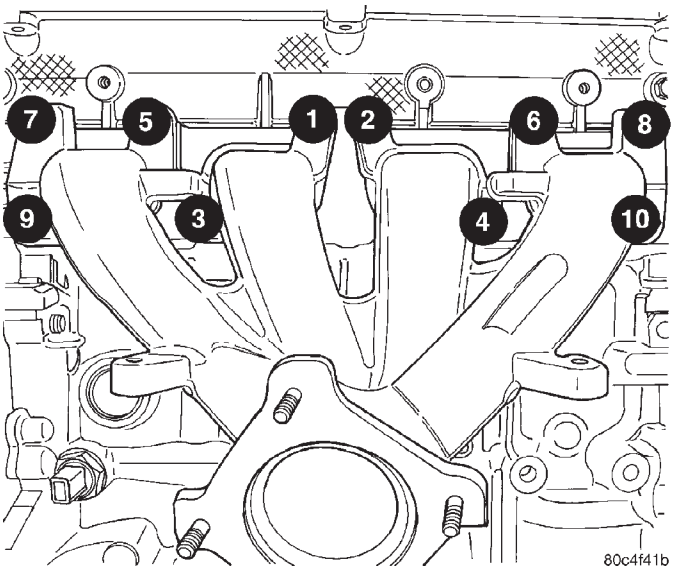

Fig. 62 Exhaust Manifold

CRANKSHAFT DAMPER

REMOVAL

(1) Remove accessory drive belts. Refer to COOLING SYSTEM for procedures.

(2) Remove crankshaft damper bolt.

(3) Remove damper by using Special Tool 1026 and Insert 6827–A (Fig. 63).

INSTALLATION

(1) Install crankshaft damper using Special Tool 6792 (M12 1.75 x 150 mm bolt, washer, thrust bearing and nut).

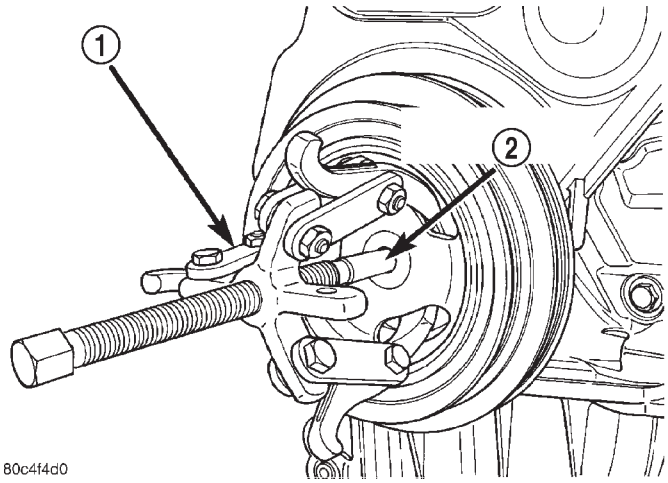

Fig. 63 Crankshaft Damper—Removal

1 – SPECIAL TOOL 1026 3-JAW PULLER
2 – SPECIAL TOOL 6827-A INSERT

NOTE: Lubricate the threads of the M12 1.75 x 150 mm bolt using Mopar® Nickel Anti-seize Compound or equivalent, before beginning to press the damper on.

(2) Install crankshaft damper bolt and tighten to 142 N·m (105 ft. lbs.) (Fig. 64).

(3) Install accessory drive belts. Refer to COOLING SYSTEM for procedures.

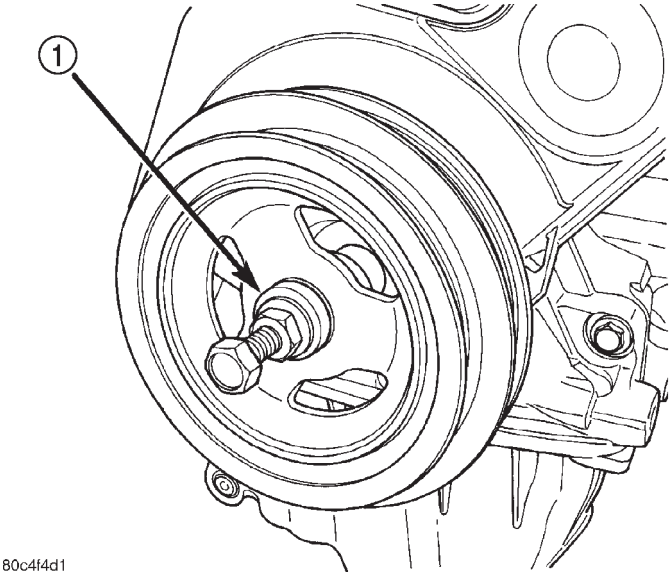

Fig. 64 Crankshaft Damper—Installation

1 – SPECIAL TOOL 6792

REMOVAL AND INSTALLATION (Continued)

TIMING BELT COVER

CAUTION: Camshaft or crankshaft should not be rotated after timing belt is removed. Damage to valve components may occur. Always align timing marks before removing timing belt.

FRONT TIMING BELT COVER

REMOVAL

(1) Remove accessory drive belts. Refer to COOLING SYSTEM for procedure.

(2) Raise vehicle on a hoist and remove right inner splash shield (Fig. 65).

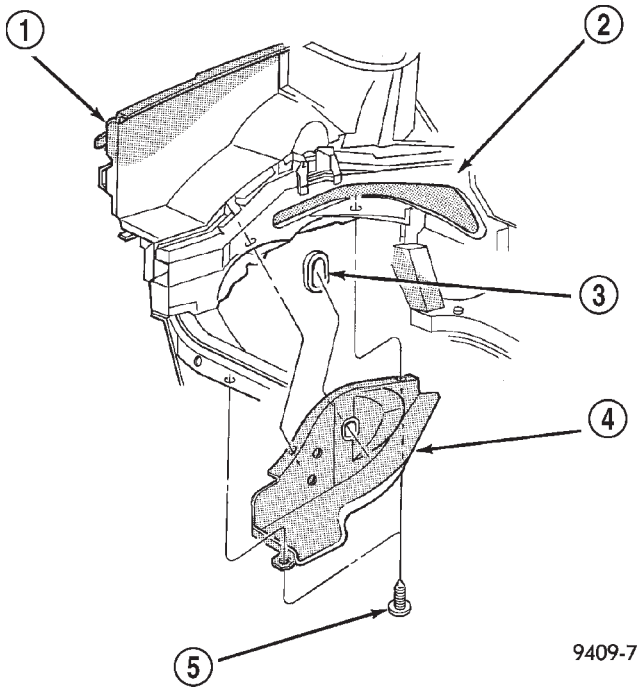

Fig. 65 Right Inner Splash Shield

1 – SIDE SHIELD
2 – RIGHT FRAME RAIL
3 – PLUG
4 – SHIELD
5 – SCREW (3)

(3) Remove crankshaft damper bolt. Remove damper using Special Tool 1026 and Insert 6827-A (Fig. 66).

(4) Lower vehicle and place a jack under engine.

(5) Remove right engine mount. Refer to procedure in this section.

(6) Remove right engine mount bracket (Fig. 67).

(7) Remove front timing belt cover fasteners and remove cover (Fig. 67).

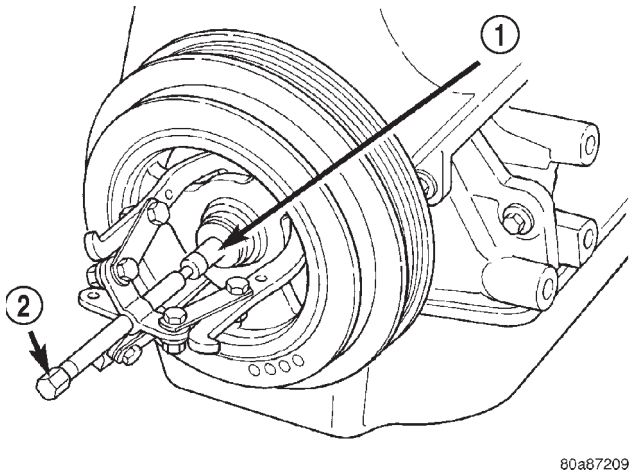

Fig. 66 Crankshaft Damper—Removal

1 – SPECIAL TOOL 6827–A INSERT
2 – SPECIAL TOOL 1026

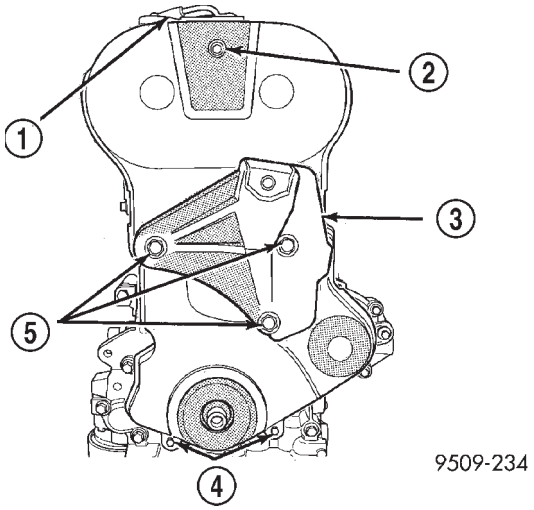

Fig. 67 Front Timing Belt Cover

1 – TAB AND CHANNEL RETAINER
2 – TIMING BELT INSPECTION COVER FASTENER
3 – ENGINE MOUNT BRACKET
4 – FRONT TIMING BELT COVER FASTENERS
5 – FASTENERS

INSTALLATION

(1) Install front timing cover.

(2) Install engine mount bracket.

(3) Install right engine mount. Refer to procedure in this section.

(4) Remove jack from under engine.

(5) Install crankshaft damper Refer to procedure in this section.

(6) Install accessory drive belts. Refer to COOLING SYSTEM for procedure.

(7) Raise vehicle on hoist and install right inner splash shield.

REMOVAL AND INSTALLATION (Continued)

REAR TIMING BELT COVER

REMOVAL

(1) Remove front timing belt cover following procedure in this section.

(2) Remove timing belt. Refer to procedure in this section.

(3) Hold camshaft sprockets with Special Tools C-4687 and Adaptor C-4687-1, while removing attaching bolts (Fig. 68). Remove camshaft sprockets.

(4) Remove timing belt tensioner assembly.

(5) Remove rear timing cover attaching screws.

(6) Remove rear timing cover.

INSTALLATION

(1) Install rear timing cover.

(2) Install camshaft sprockets. While holding sprockets with Special Tools C-4687 and Adaptor C-4687-1, tighten attaching bolts to 101 N·m (75 ft. lbs.).

(3) Install timing belt tensioner assembly.

(4) Install timing belt. Refer to procedure in this section.

(5) Install front timing belt cover following procedure in this section.

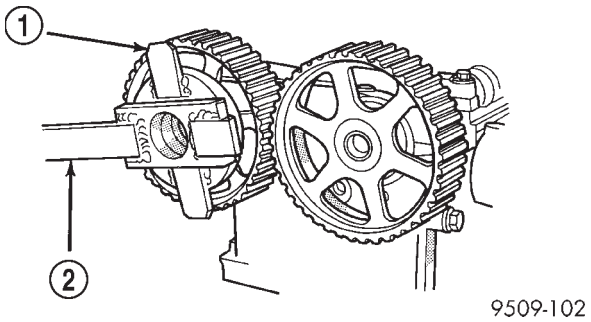

Fig. 68 Camshaft Sprocket—Removal/Installation

1 – ADAPTER C-4687–1
2 – SPECIAL TOOL C-4687

TIMING BELT

CHECKING BELT TIMING—COVER INSTALLED

(1) Remove number one spark plug.

(2) Using a dial indicator, set number one cylinder to TDC on the compression stroke.

(3) Remove the timing belt access cover from the engine (Fig. 69).

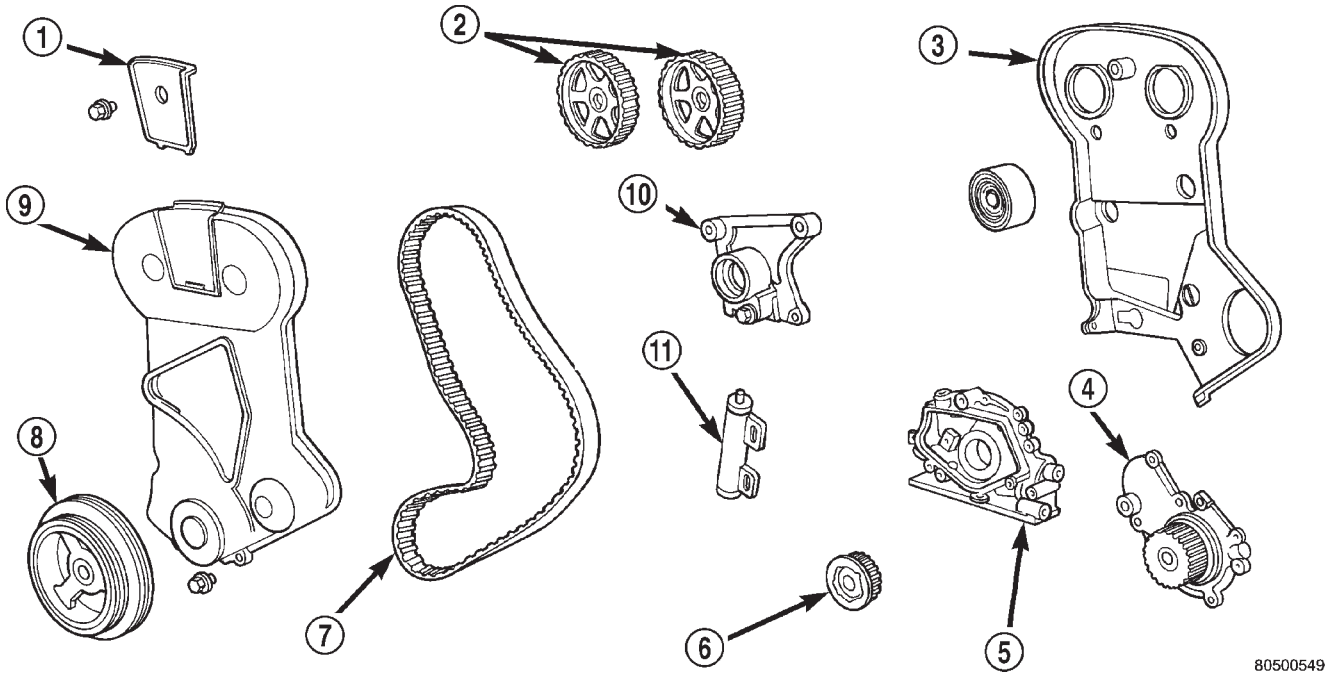

Fig. 69 Timing Belt System

1 – ACCESS PANEL
2 – CAMSHAFT SPROCKETS
3 – REAR TIMING BELT COVER
4 – WATER PUMP
5 – OIL PUMP
6 – CRANKSHAFT SPROCKET
7 – TIMING BELT
8 – CRANKSHAFT DAMPER
9 – FRONT TIMING BELT COVER
10 – BRACKET
11 – TENSIONER

REMOVAL AND INSTALLATION (Continued)

(4) Check the timing marks on the camshaft sprockets, they should align with each other (Fig. 70).

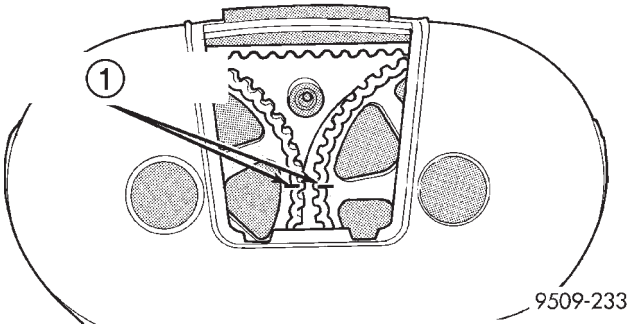

Fig. 70 Camshaft Timing Check

1 – CAMSHAFT TIMING MARKS SHOULD LINE UP

REMOVAL

CAUTION: Camshaft or crankshaft should not be rotate after timing belt is removed. Damage to valve components may occur. Always align timing marks before removing timing belt.

(1) Remove accessory drive belts. Refer to Group 07, Cooling System for procedures.

(2) Raise vehicle on hoist and remove right inner splash shield.

(3) Remove crankshaft damper bolt. Refer to Crankshaft Damper procedure outlined in this section.

(4) Lower vehicle.

(5) Support engine with a jack and remove right engine mount. Refer to procedure outline in this section.

(6) Remove power steering pump assembly and set aside.

(7) Remove engine mount bracket and timing belt cover fasteners, remove cover.

(8) Align camshaft timing marks. Loosen timing belt tensioner fasteners and remove timing belt.

CAUTION: Do not loosen, tighten, or remove the tensioner pivot bolt (Fig. 72).

CAMSHAFT AND CRANKSHAFT TIMING PROCEDURE AND BELT INSTALLATION —DOHC ENGINE

(1) When tensioner is removed from the engine it is necessary to compress the plunger into the tensioner body.

(2) Place the tensioner into a vise and slowly compress the plunger (Fig. 73).

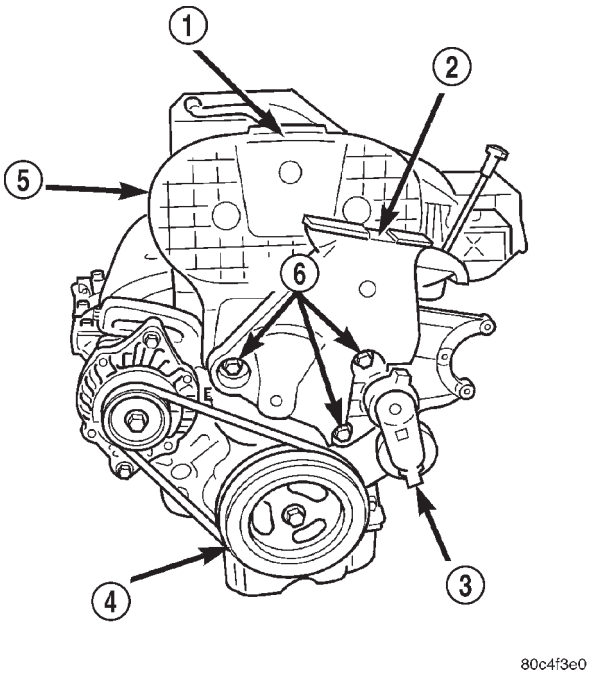

Fig. 71 Front Timing Belt Cover

1 – ACCESS PANEL
2 – ENGINE MOUNT BRACKET
3 – AUTOMATIC BELT TENSIONER
4 – CRANKSHAFT PULLEY
5 – FRONT TIMING BELT COVER
6 – BOLTS

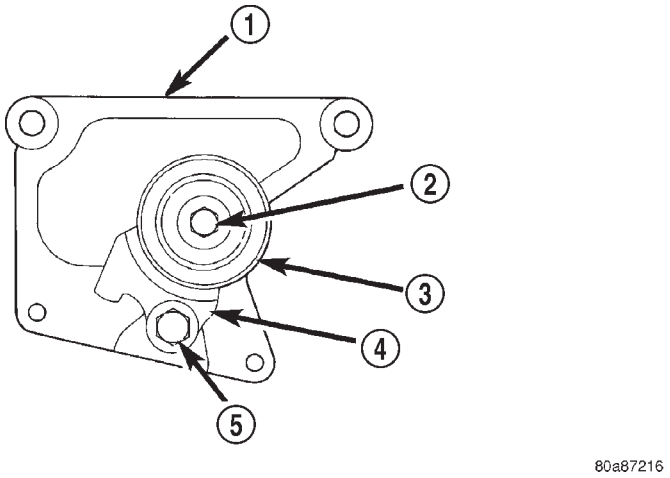

Fig. 72 Tensioner Pulley Assembly

1 – BACKING PLATE TENSIONER
2 – PULLEY FASTENER
3 – PULLEY
4 – TENSIONER PULLEY PIVOT BRACKET
5 – TENSIONER PIVOT BOLT (DO NOT TIGHTEN, LOOSEN OR REMOVE)

REMOVAL AND INSTALLATION (Continued)

CAUTION: Index the tensioner in the vise the same way it is installed on the engine. This is to ensure proper pin orientation when tensioner is installed on the engine.

(3) When plunger is compressed into the tensioner body install a pin through the body and plunger to retain plunger in place until tensioner is installed.

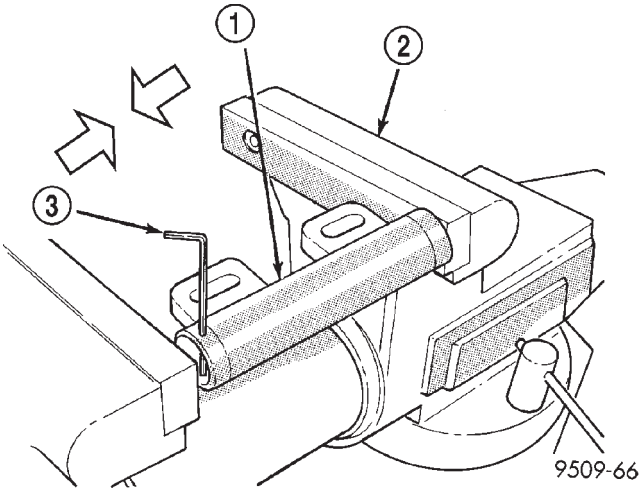

Fig. 73 Compressing Timing Belt Tensioner

1 – TENSIONER
2 – BENCH VISE (WITH SOFT JAWS)
3 – LOCKING PIN

(4) Set crankshaft sprocket to TDC by aligning the sprocket with the arrow on the oil pump housing, then back off to 3 notches before TDC (Fig. 74).

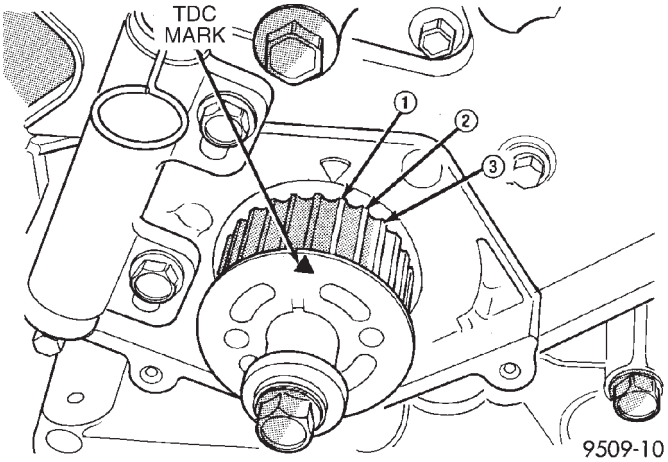

Fig. 74 Crankshaft Sprocket Timing

(5) Set camshafts timing marks together by aligning notches on sprockets (Fig. 75).

(6) Rotate crankshaft 1/2 tooth counterclockwise from TDC (Fig. 76).

(7) Install timing belt in this direction. Starting at the crankshaft, go around the water pump sprocket,

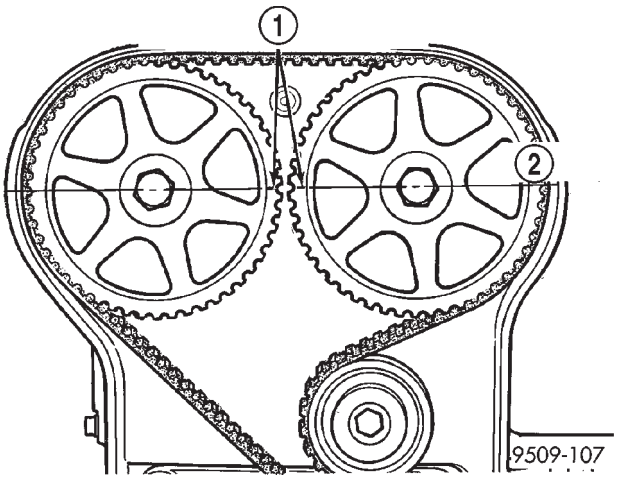

Fig. 75 Camshaft Timing Marks

1 – ALIGN CAMSHAFT SPROCKET TIMING MARKS TOGETHER
2 – CENTERLINE

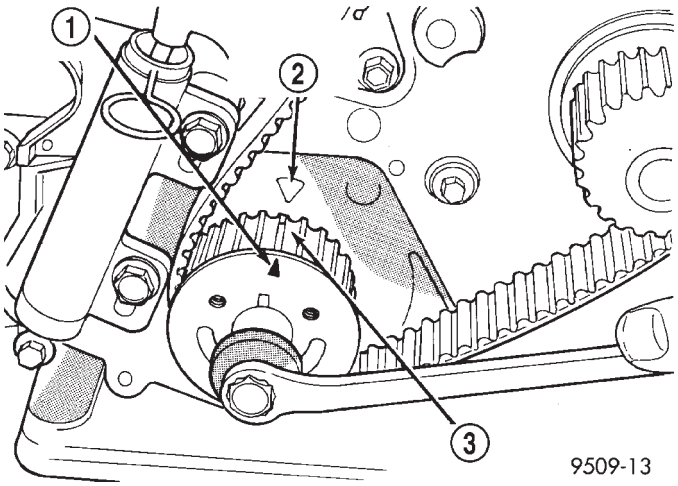

Fig. 76 Adjusting Crankshaft Sprocket for Timing Belt Installation

1 – T.D.C. MARK
2 – T.D.C. REFERENCE MARK
3 – 1/2 NOTCH LOCATION

idler pulley, camshaft sprockets and then around the tensioner pulley (Fig. 77).

(8) Move crankshaft sprocket to TDC to take up belt slack. Install tensioner to block but do not tighten fasteners.

(9) Using a torque wrench on the tensioner pulley apply 28 N·m (250 in. lbs.) of torque to tensioner (Fig. 77).

(10) With torque being applied to the tensioner pulley move the tensioner up against the tensioner pulley bracket and tighten fasteners to 31 N·m (275 in. lbs.).

(11) Pull tensioner plunger pin. Pretension is correct when pin can be removed and installed freely.

REMOVAL AND INSTALLATION (Continued)

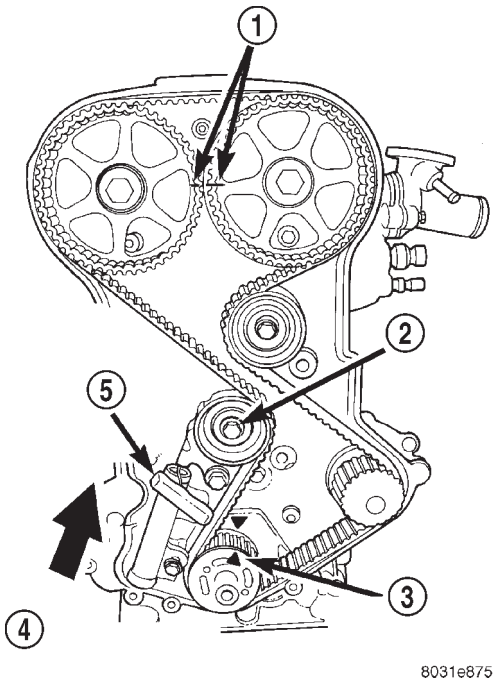

Fig. 77 Adjusting Timing Belt Tension

1 – CAMSHAFTS TDC
2 – INSTALL TORQUE WRENCH HERE
3 – CRANKSHAFT TDC
4 – MOVE TENSIONER UP
5 – LOCKING PIN INSTALLED INTO TENSIONER

(12) Rotate crankshaft 2 revolutions and check the alignment of the timing marks (Fig. 77).

(13) Install front half of timing cover.

(14) Install engine mount bracket.

(15) Install power steering pump assembly.

(16) Install right engine mount. Refer to procedure outlined in this section.

(17) Remove jack from under engine.

(18) Install crankshaft damper using M12 1.75 x 150 mm bolt, washer, thrust bearing and nut from Special Tool 6792. Install crankshaft damper bolt and tighten to 142 N·m (105 ft. lbs.) (Fig. 78).

(19) Install accessory drive belts. Refer to Group 7, Cooling System Accessory Drive section for procedure.

(20) Raise vehicle on hoist and install right inner splash shield.

(21) Lower vehicle and perform camshaft and crankshaft timing relearn procedure as follows:

- Step 1: Connect the DRB scan tool to the data link (diagnostic) connector. This connector is located in the passenger compartment; at the lower edge of instrument panel; near the steering column.
- Step 2: Turn the ignition switch on and access the “miscellaneous” screen.
- Step 3: Select re-learn cam/crank option and follow directions on DRB screen.

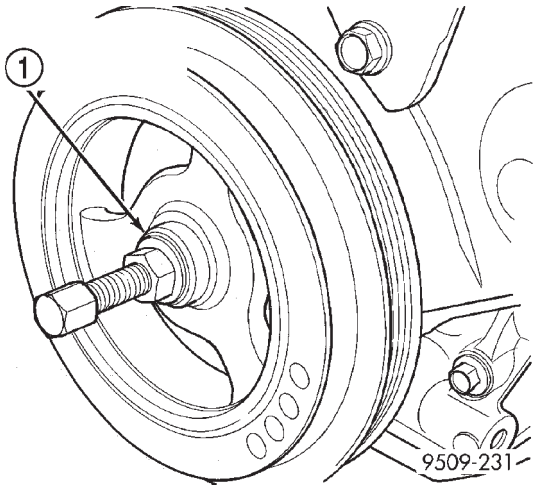

Fig. 78 Crankshaft Damper—Installation

1 – M12 — 1.75 × 150 MM BOLT, WASHER AND THRUST BEARING FROM SPECIAL TOOL 6792

CYLINDER HEAD COVER

REMOVAL

(1) Remove upper intake manifold. Refer to procedure in this section.

(2) Remove ignition coil and spark plug wires.

(3) Disconnect PCV and make-up air hoses from cylinder head cover (Fig. 79).

(4) Remove cylinder head cover bolts.

CAUTION: When removing cylinder head cover bolts, be careful not to interchange the two (2) center bolts with the seven (7) perimeter bolts. The two (2) center bolts contain an aluminum washer between the bolt head and torque limiter for sealing purposes.

(5) Remove cylinder head cover from cylinder head.

INSTALLATION

NOTE: Replace spark plug well seals and bolt seals when installing a new cylinder head cover gasket.

(1) Install new cylinder head cover gaskets (Fig. 80) and spark plug well seals (Fig. 81).

(2) Replace cylinder head cover bolt seals (Fig. 82).

CAUTION: Do not allow oil or solvents to contact the timing belt as they can deteriorate the rubber and cause tooth skipping.

(3) Apply Mopar® Engine RTV GEN II at the camshaft cap corners and at the top edges of the 1/2 round seal (Fig. 83).

REMOVAL AND INSTALLATION (Continued)

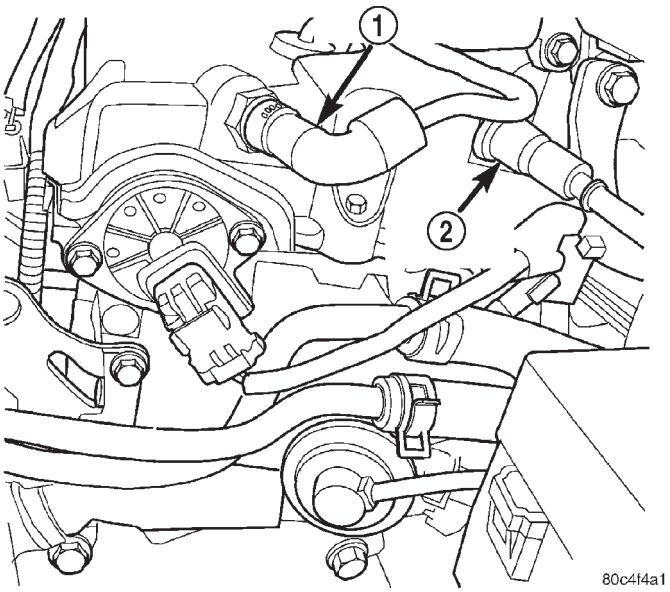

Fig. 79 PCV and Make-up Air Hoses

1 – PCV HOSE
2 – MAKE-UP AIR HOSE

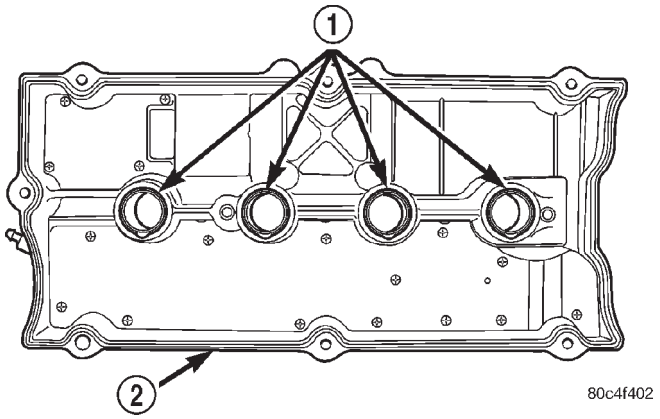

Fig. 80 Cylinder Head Cover Gasket and Spark Plug Well Seals

1 – SPARK PLUG WELL SEALS
2 – GASKET

CAUTION: When installing cylinder head cover bolts, be careful not to interchange the two (2) center bolts with the seven (7) perimeter bolts. The two (2) center bolts contain an aluminum washer between the bolt head and torque limiter for sealing purposes.

(4) Install cylinder head cover assembly to cylinder head. Install all bolts, ensuring the two (2) bolts containing the sealing washer are located in the center locations of cover. Tighten bolts in sequence shown in (Fig. 84). Using a 3 step torque method as follows:

(a) Tighten all bolts to 4.5 N·m (40 in. lbs.).
(b) Tighten all bolts to 9.0 N·m (80 in. lbs.).

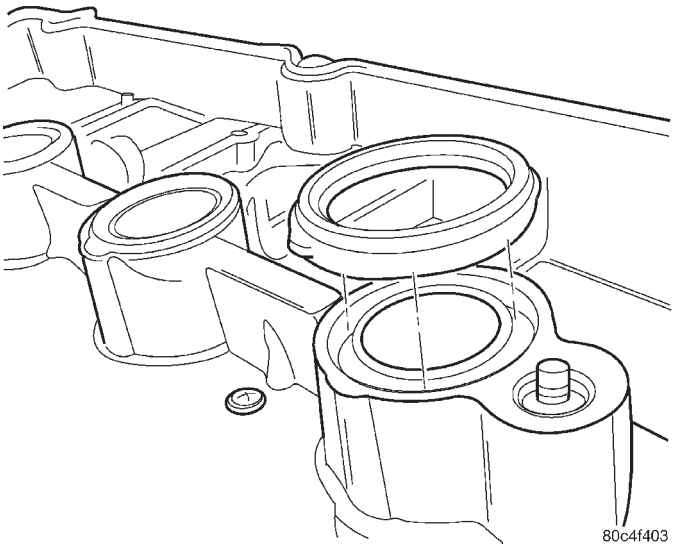

Fig. 81 Spark Plug Well Seals

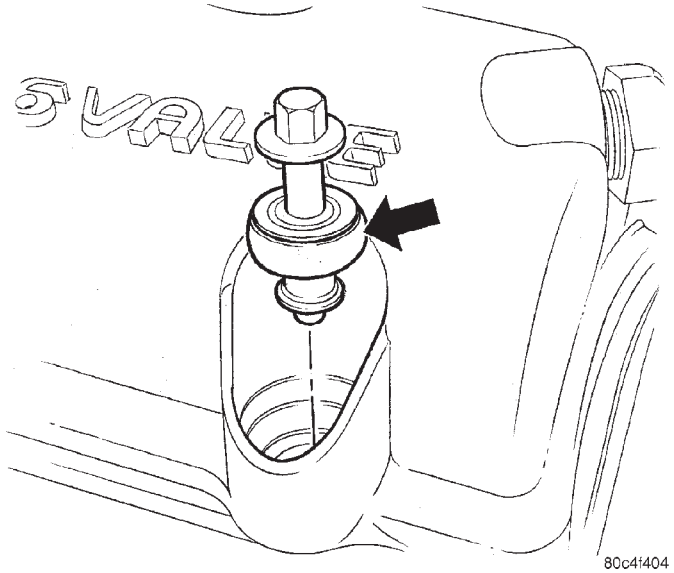

Fig. 82 Cylinder Head Cover Bolt Seals

(c) Tighten all bolts to 12 N·m (105 in. lbs.).

(5) Install ignition coil and spark plug wires. Tighten fasteners to 12 N·m (105 in. lbs.).

(6) If the PCV valve was removed, apply Mopar® Thread Sealant with Teflon to threads and install valve to cylinder head cover. Tighten PCV valve to 8 N·m (70 in. lbs.).

(7) Connect PCV and make-up air hoses to cylinder head cover (Fig. 79).

(8) Install upper intake manifold. Refer to procedure in this section.

CAMSHAFT

REMOVAL

(1) Remove cylinder head cover using procedure in this section.

REMOVAL AND INSTALLATION (Continued)

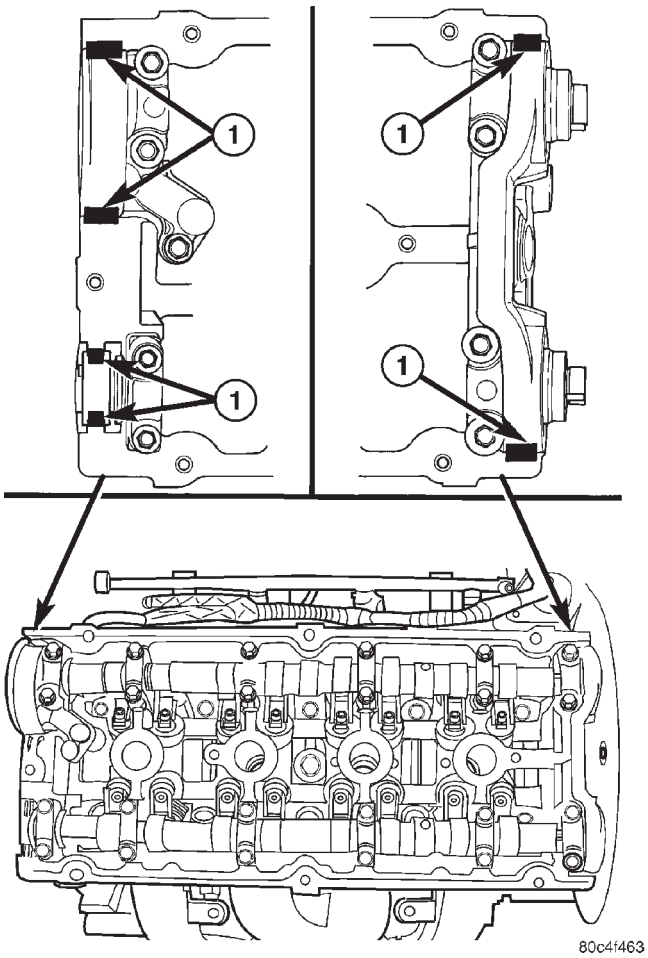

Fig. 83 Sealer Locations

1 – SEALER LOCATION

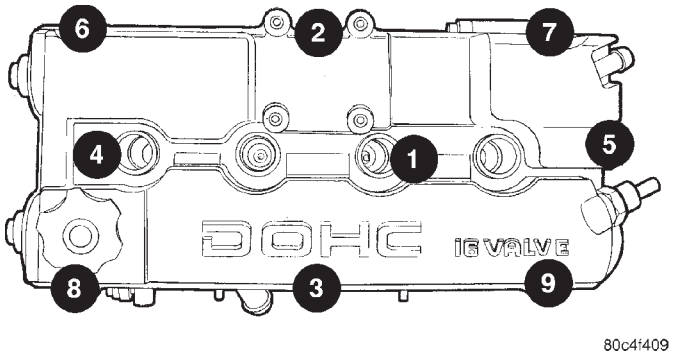

Fig. 84 Cylinder Head Cover Tightening Sequence

(2) Remove camshaft position sensor and camshaft target magnet. Refer to IGNITION SYSTEM for procedure.

(3) Remove timing belt, sprockets and covers. Refer to procedures in this section.

(4) Bearing caps are identified for location. Remove the outside bearing caps first (Fig. 85).

(5) Loosen the camshaft bearing cap attaching fasteners in sequence shown (Fig. 86), one camshaft at a time.

CAUTION: Camshafts are not interchangeable. The left (intake) camshaft thrust bearing face (No. 6) spacing is wider.

(6) Identify the camshafts before removing from the head. The camshafts are not interchangeable.

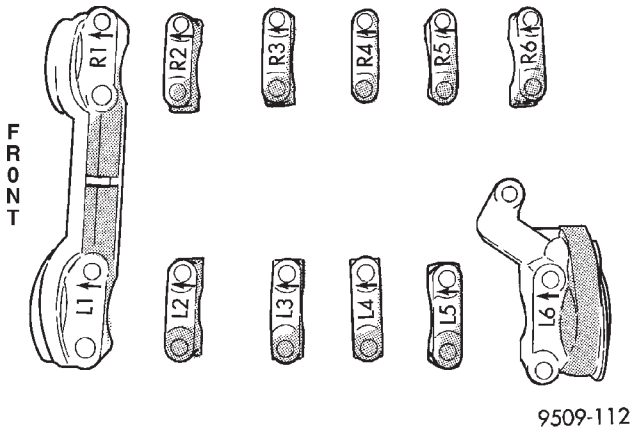

Fig. 85 Camshaft Bearing Cap Identification

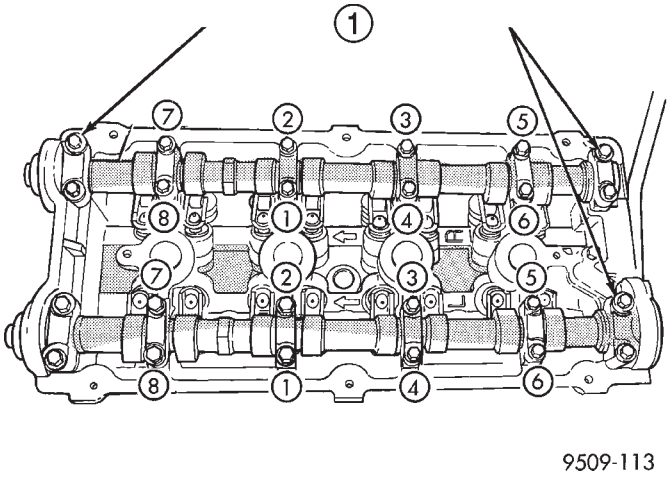

Fig. 86 Camshaft Bearing Cap—Removal

1 – REMOVE OUTSIDE BEARING CAPS FIRST

CAMSHAFT END PLAY

(1) Oil camshaft journals and install camshaft **WITHOUT** cam follower assemblies. Install rear cam caps and tighten screws to specified torque.

(2) Using a suitable tool, move camshaft as far rearward as it will go.

(3) Zero dial indicator (Fig. 87).

(4) Move camshaft as far forward as it will go.

(5) End play travel: 0.05–0.15 mm (0.002–0.010 in.).

(5) If end play is excessive, check cylinder head and camshaft for wear; replace as necessary.

REMOVAL AND INSTALLATION (Continued)

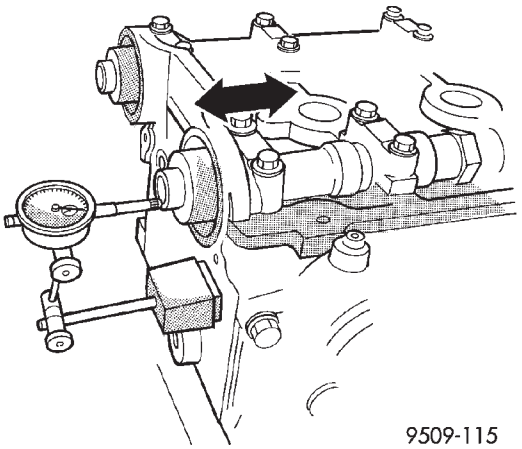

Fig. 87 Camshaft End Play

INSTALLATION

CAUTION: Ensure that NONE of the pistons are at top dead center when installing the camshafts.

(1) Lubricate all camshaft bearing journals, cam followers, and camshafts.

(2) Install cam followers and camshafts.

(3) Install right and left camshaft bearing caps No. 2–5 and right No. 6. Tighten the M6 fasteners to 12 N·m (105 in. lbs.) in sequence shown in (Fig. 88).

(4) Apply Mopar® Gasket Maker to No. 1 and left No. 6 bearing caps as shown in (Fig. 89). Install the bearing caps and tighten the M8 fasteners to 24 N·m (215 in. lbs.).

NOTE: Bearing end caps must be installed before seals can be installed.

(5) Install camshaft seals, timing belt, and sprockets. Refer to procedure in this section.

(6) Install camshaft target magnet and camshaft position sensor. Refer to IGNITION SYSTEM for procedure.

(7) Install cylinder head cover using procedure in this section.

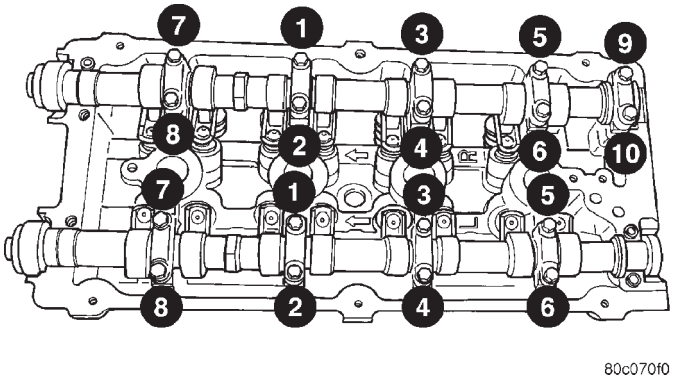

Fig. 88 Camshaft Bearing Cap Tightening Sequence

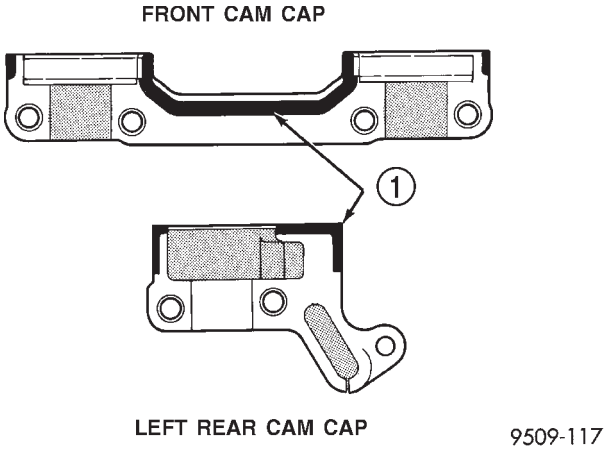

Fig. 89 Camshaft Bearing Cap Sealing

1 – 1.5 mm (.060 in.) DIAMETER BEAD OF MOPAR GASKET MAKER

CAMSHAFT OIL SEAL—FRONT

REMOVAL

(1) Remove timing belt. Refer to procedure in this section.

(2) Hold camshaft sprocket with Special Tool 6847 and remove center bolt (Fig. 90).

(3) Remove rear timing belt cover. Refer to procedure in this section.

(4) Remove camshaft seal using Special Tool C-4679-A (Fig. 91).

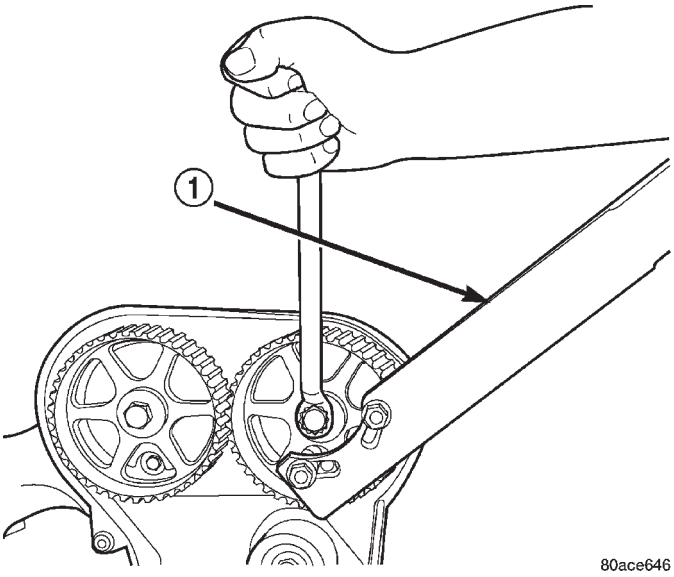

Fig. 90 Camshaft Sprocket—Removal/Installation

1 – SPECIAL TOOL 6847

CAUTION: Do not nick shaft seal surface or seal bore

REMOVAL AND INSTALLATION (Continued)

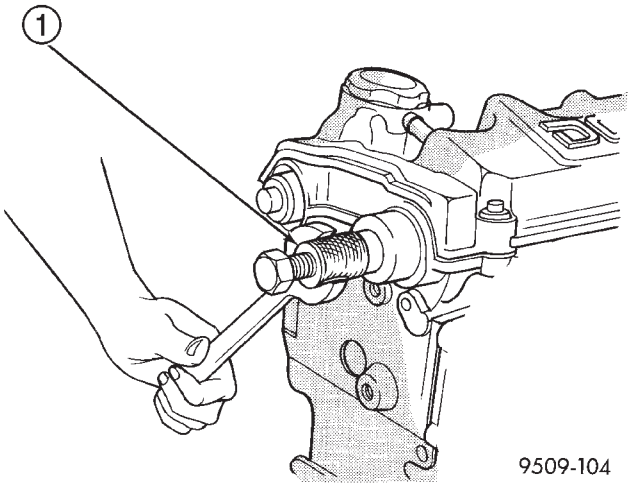

Fig. 91 Camshaft Oil Seal Removal—Typical
1 – SPECIAL TOOL C-4679

INSTALLATION

(1) Clean sealing surfaces. Seal surface must be free of varnish, dirt or nicks. Polish with 400 grit paper if necessary.

(2) Install camshaft seals into cylinder head using Special Tool MD-998306 until flush with head (Fig. 92).

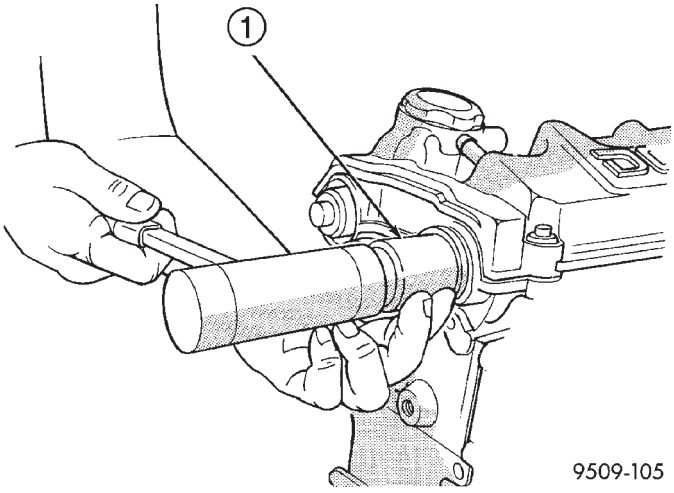

Fig. 92 Camshaft Seal Installation—Typical
1 – SPECIAL TOOL MD 998306

(3) Install rear timing belt cover. Refer to procedure in this section.

CAUTION: Do not use an impact wrench to tighten camshaft sprocket bolts. Damage to camshaft to sprocket locating dowel pin may occur.

(4) Install camshaft sprockets. Hold sprockets with Special Tool 6847. Tighten the center bolt to 101 N·m (75 ft. lbs.) (Fig. 90).

(5) Install timing belt. Refer to procedures in this section.

HYDRAULIC LASH ADJUSTER

REMOVAL

NOTE: This procedure is for in-vehicle service with camshafts installed.

(1) Remove cylinder head cover. Refer to procedure in this section.

(2) Remove cam follower. Refer to procedure in this section.

(3) Remove lash adjuster (Fig. 93).

(4) Repeat removal procedure for each lash adjuster.

(5) If reusing, mark each hydraulic lash adjuster for reassembly in original position. Lash adjusters are serviced as an assembly.

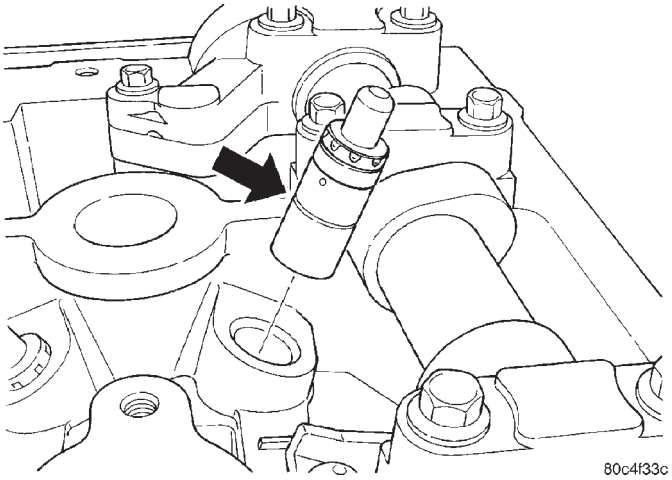

Fig. 93 Hydraulic Lash Adjuster

INSTALLATION

(1) Install hydraulic lash adjuster (Fig. 93). Ensure the adjusters are at least partially full of engine oil. This is indicated by little or no plunger travel when the lash adjuster is depressed.

(2) Install cam follower.

(3) Repeat installation procedure for each lash adjuster.

(4) Install cylinder head cover.

VALVE SPRINGS AND VALVE SEALS IN VEHICLE

REMOVAL

(1) Remove camshafts. Refer to procedure in this section.

(2) Rotate crankshaft until piston is at TDC on compression.

REMOVAL AND INSTALLATION (Continued)

(3) With air hose attached to adapter tool installed in spark plug hole, apply 90-120 psi air pressure.

(4) Using Special Tool MD-998772-A with adapter 6779 (Fig. 94), compress valve springs and remove valve locks.

(5) Remove valve spring(s).

(6) Remove valve stem seal(s) by a using valve stem seal tool.

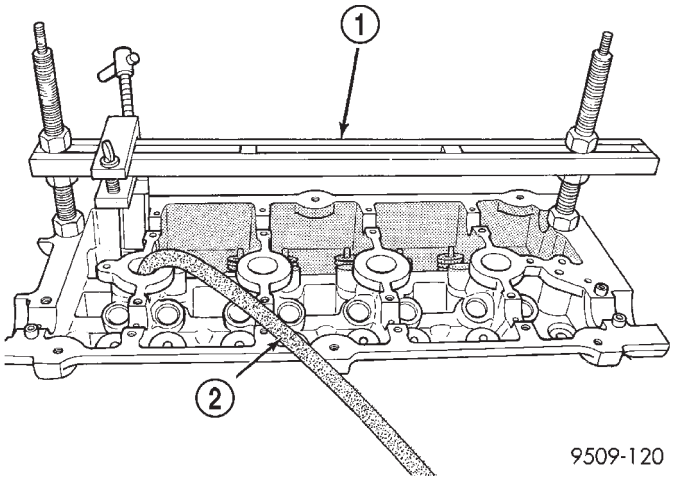

Fig. 94 Valve Spring—Removal/Installation

1 – VALVE SPRING COMPRESSOR MD 998772A
2 – AIR HOSE

INSTALLATION

(1) Install valve seal/valve spring seat assembly (Fig. 95). Push the assembly down to seat it onto the valve guide.

(2) Install valve spring and retainer, use Special Tool MD-998772-A with adapter 6779 to compress valve springs only enough to install locks (Fig. 94). Correct alignment of tool is necessary to avoid nicking valve stems.

(3) Remove air hose and install spark plugs.

(4) Install camshafts and cylinder head cover. Refer to procedures in this section.

CYLINDER HEAD

REMOVAL

(1) Perform fuel system pressure release procedure **before attempting any repairs.** Refer to FUEL SYSTEM for procedure.

(2) Remove air inlet tube and filter housing.

(3) Disconnect negative cable from battery.

(4) Drain cooling system. Refer to COOLING SYSTEM for procedure.

(5) Disconnect all vacuum lines, electrical wiring, ground straps, and fuel line.

(6) Remove throttle linkage. Refer to FUEL SYSTEM for procedure.

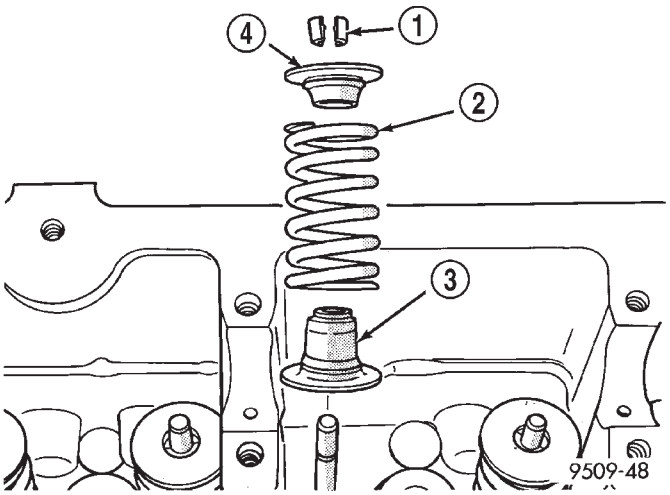

Fig. 95 Valve Stem Seal/Valve Spring Seat

1 – VALVE RETAINING LOCKS
2 – VALVE SPRING
3 – VALVE SEAL AND VALVE SPRING SEAT ASSEMBLY
4 – VALVE SPRING RETAINER

(7) Remove throttle body support and intake manifold support brackets.

(8) Remove heater tube support bracket from cylinder head.

(9) Remove fastener attaching dipstick tube to cylinder head.

(10) Remove upper intake manifold

(11) Disconnect upper radiator and heater hoses from water outlet connections.

(12) Remove accessory drive belts. Refer to COOLING SYSTEM for procedure.

(13) Raise vehicle and remove exhaust pipe from manifold.

(14) Disconnect ignition coil wiring connector. Remove ignition coil and plug wires from engine.

(15) Disconnect cam sensor wiring connectors.

(16) Remove timing belt and camshaft sprockets. Refer to procedures in this section.

(17) Remove timing belt idler pulley and rear timing belt cover.

(18) Remove cylinder head cover using procedure in this section.

(19) Remove camshafts and cam followers. Refer to procedures in this section.

(20) Remove cylinder head bolts.

(21) Remove cylinder head from engine block.

(22) Inspect and clean cylinder head and block sealing surfaces. Refer to Cleaning and Inspection in this section for procedures.

NOTE: Ensure cylinder head bolt holes in the block are clean and threads are not damaged.

REMOVAL AND INSTALLATION (Continued)

INSTALLATION

NOTE: The Cylinder head bolts should be examined BEFORE reuse. If the threads are necked down, the bolts should be replaced (Fig. 96).

Necking can be checked by holding a scale or straight edge against the threads. If all the threads do not contact the scale, the bolt should be replaced.

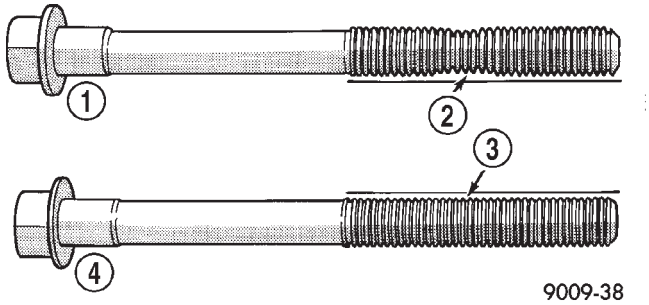

Fig. 96 Checking Bolts for Stretching (Necking)

1 – STRETCHED BOLT
2 – THREADS ARE NOT STRAIGHT ON LINE
3 – THREADS ARE STRAIGHT ON LINE
4 – UNSTRETCHED BOLT

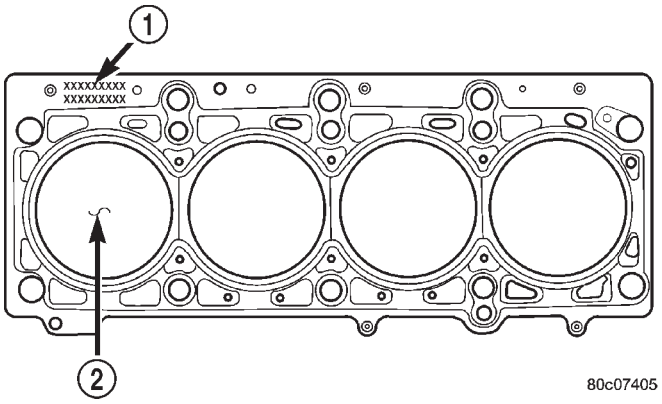

Fig. 97 Cylinder Head Gasket Positioning

1 – PART NUMBER FACES UP
2 – NO. 1 CYLINDER

(1) Position the new cylinder head gasket on cylinder block with the part number facing up (Fig. 97). Ensure gasket is seated over the locating dowels in block.

(2) Before installing the bolts, the threads should be lightly coated with engine oil.

(3) Tighten the cylinder head bolts in the sequence shown in (Fig. 98). Using the 4 step torque-turn method, tighten according to the following values:

- First All to 34 N·m (25 ft. lbs.)
- Second All to 68 N·m (50 ft. lbs.)
- Third All to 68 N·m (50 ft. lbs.)

CAUTION: Do not use a torque wrench for the following step.

- Fourth Turn an additional 1/4 Turn,

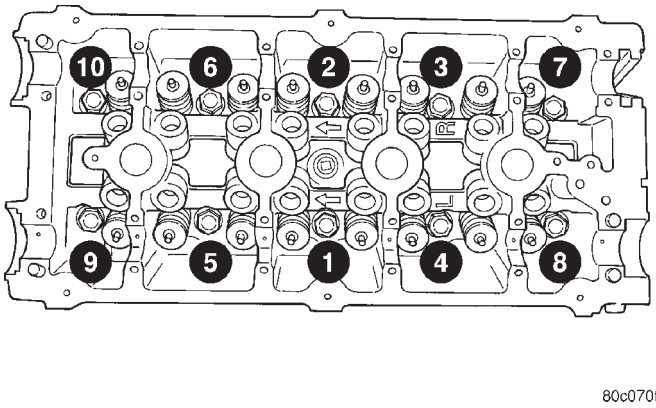

Fig. 98 Cylinder Head Tightening Sequence

(4) Install cam followers and camshafts. Refer to procedures in this section.

(5) Install cylinder head cover using procedure in this section.

(6) Install rear timing belt cover and timing belt idler pulley.

(7) Install camshaft sprockets and timing belt. Refer to procedures in this section.

(8) Connect cam sensor wiring connector.

(9) Install ignition coil and plug wires onto the engine. Connect ignition coil wiring connector.

(10) Install power steering pump reservoir and line support bracket to cylinder head.

(11) Raise vehicle and install the exhaust pipe to the manifold.

(12) Install accessory drive belts. Refer to COOLING SYSTEM for procedure.

(13) Install lower intake manifold. Refer to procedure in this section.

(14) Connect upper radiator and heater hoses to water outlet connections.

(15) Install upper intake manifold. Refer to procedure in this section.

(16) Install throttle body support and intake manifold support brackets.

(17) Install heater tube support bracket to cylinder head.

(18) Install fastener attaching dipstick tube to lower intake manifold

(19) Install throttle linkage. Refer to FUEL SYSTEM for procedure.

(20) Connect all vacuum lines, electrical wiring, ground straps and fuel line.

(21) Fill cooling system. Refer to COOLING SYSTEM for procedure.

(22) Connect negative cable to battery.

(23) Install air inlet tube and filter housing.

REMOVAL AND INSTALLATION (Continued)

OIL PAN

REMOVAL

(1) Drain engine oil.
(2) Remove powertrain bending strut.
(3) Remove structural collar from oil pan to transaxle (Fig. 99).

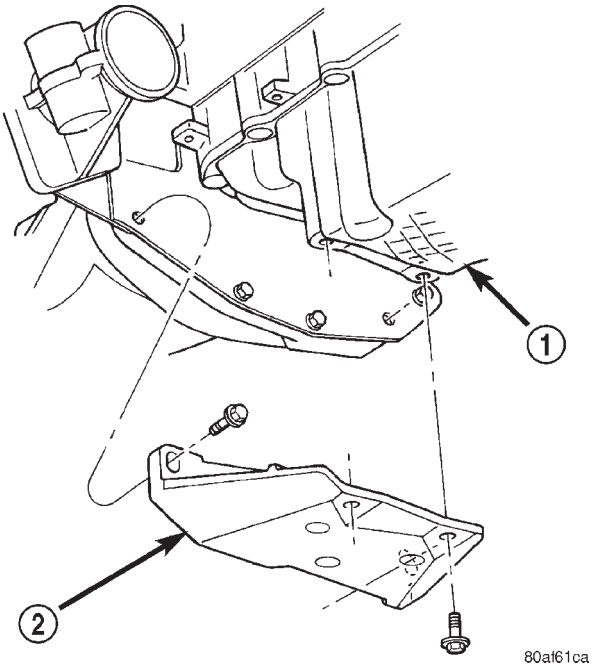

Fig. 99 Structural Collar—Removal and Installation
1 – OIL PAN
2 – STRUCTURAL COLLAR

(4) Remove transaxle lower dust cover.
(5) If equipped with air conditioning, remove oil filter and adaptor. Refer to procedures in this section.
(6) Remove oil pan.
(7) Clean oil pan and all gasket surfaces.

INSTALLATION

(1) Apply Mopar® Engine RTV GEN II or equivalent at the oil pump to engine block parting line (Fig. 100).
(2) Install a new oil pan gasket to pan.
(3) Install pan and tighten screws to 12 N·m (105 in. lbs.).
(4) Install oil filter and adaptor.
(5) Install transaxle lower dust cover.
(6) Install powertrain bending strut.

CAUTION: The torque procedure for the structural collar must be followed, as damage to oil pan or collar could occur.

(7) Install the structural collar (Fig. 99) using the following 3 step torque sequence:

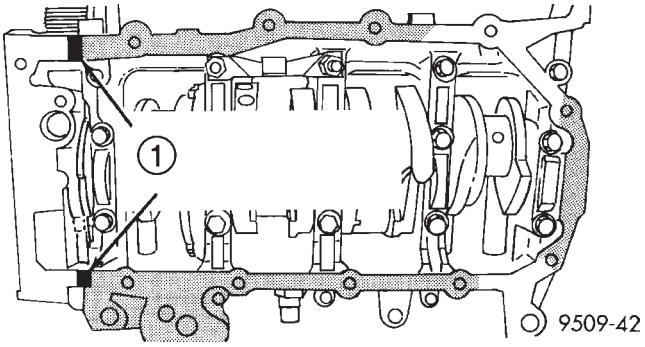

Fig. 100 Oil Pan Sealing
1 – PLACE A 1/8 INCH BEAD OF SEALER AT THE PARTING LINE OF THE OIL PUMP TO ENGINE BLOCK

- Step 1: Install the collar to oil pan bolts and tighten to 3 N·m (30 in. lbs.).
- Step 2: Install collar to transaxle bolts and tighten to 108 N·m (80 ft. lbs.).
- Step 3: Final torque the collar to oil pan bolts to 54 N·m (40 ft. lbs.).

(8) Fill engine crankcase with proper oil to correct level.

CRANKSHAFT OIL SEAL—FRONT

REMOVAL

(1) Using Special Tool 1026 and Insert 6827-A, remove crankshaft damper (Fig. 101).
(2) Remove timing belt. Refer to procedure in this section.
(3) Remove crankshaft sprocket using Special Tool 6793 and insert C-4685-C2 (Fig. 102).

CAUTION: Do not nick shaft seal surface or seal bore.

(4) Using Tool 6771 to remove front crankshaft oil seal (Fig. 103). Be careful not to damage the seal surface of cover.

INSTALLATION

(1) Install new seal by using Special Tool 6780 (Fig. 104).
(2) Place seal into opening with seal spring towards the inside of engine. Install seal until flush with cover.
(3) Install crankshaft sprocket using Special Tool 6792 (Fig. 105).
(4) Install timing belt. Refer to procedure in this section.
(5) Install crankshaft damper (Fig. 106). Use thrust bearing/washer and 12M 1.75 x 150 mm bolt from Special Tool 6792. Install crankshaft damper bolt and tighten to 142 N·m (105 ft. lbs.).

REMOVAL AND INSTALLATION (Continued)

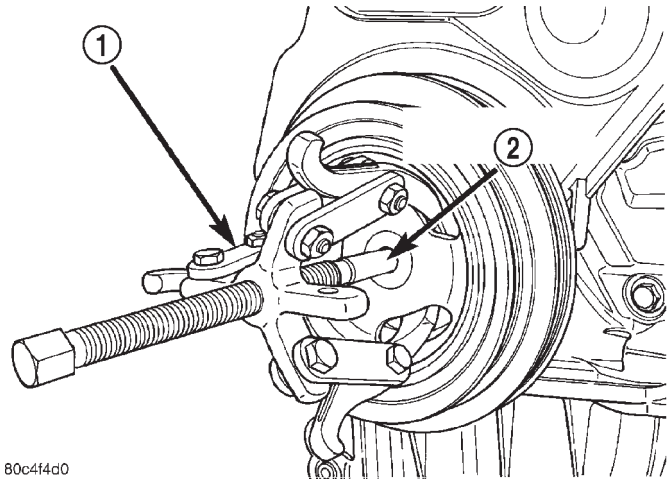

Fig. 101 Crankshaft Damper—Removal

1 – SPECIAL TOOL 1026 3-JAW PULLER
2 – SPECIAL TOOL 6827-A INSERT

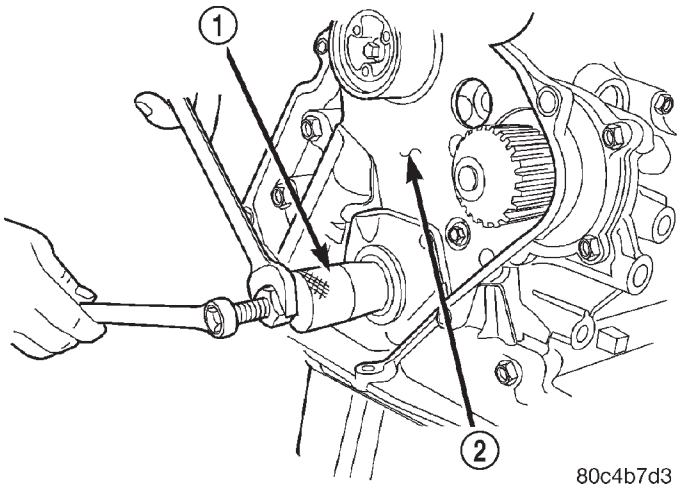

Fig. 103 Front Crankshaft Oil Seal—Removal

1 – SPECIAL TOOL 6771
2 – REAR TIMING BELT COVER

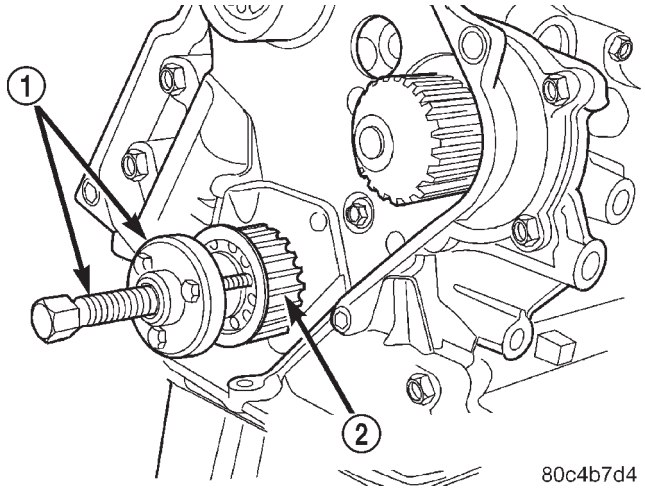

Fig. 102 Crankshaft Sprocket—Removal

1 – SPECIAL TOOL 6793
2 – CRANKSHAFT SPROCKET

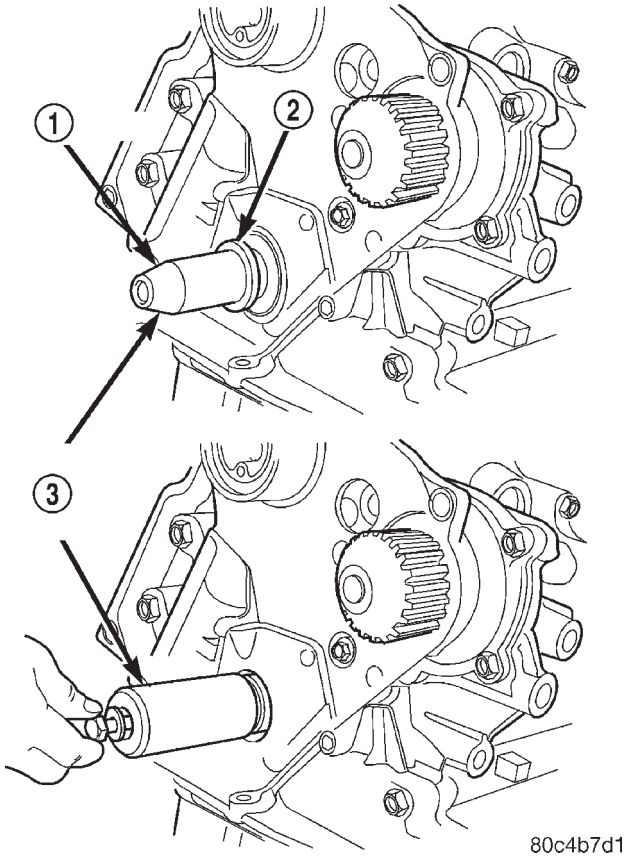

Fig. 104 Front Crankshaft Oil Seal—Installation

1 – PROTECTOR
2 – SEAL
3 – SPECIAL TOOL 6780

REMOVAL AND INSTALLATION (Continued)

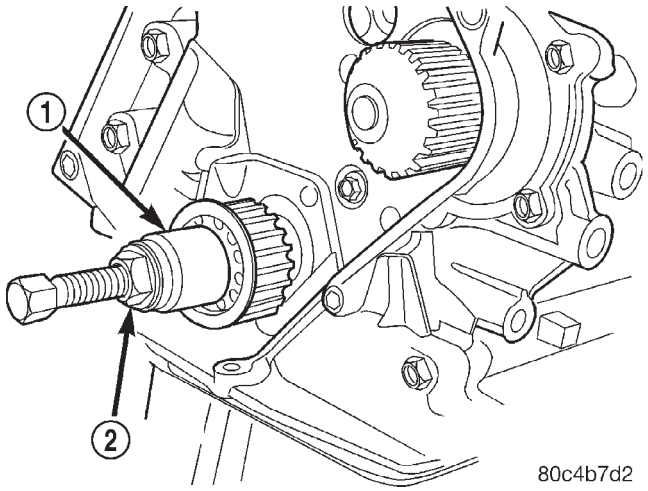

Fig. 105 Crankshaft Sprocket—Installation

1 – SPECIAL TOOL 6792
2 – TIGHTEN NUT TO INSTALL

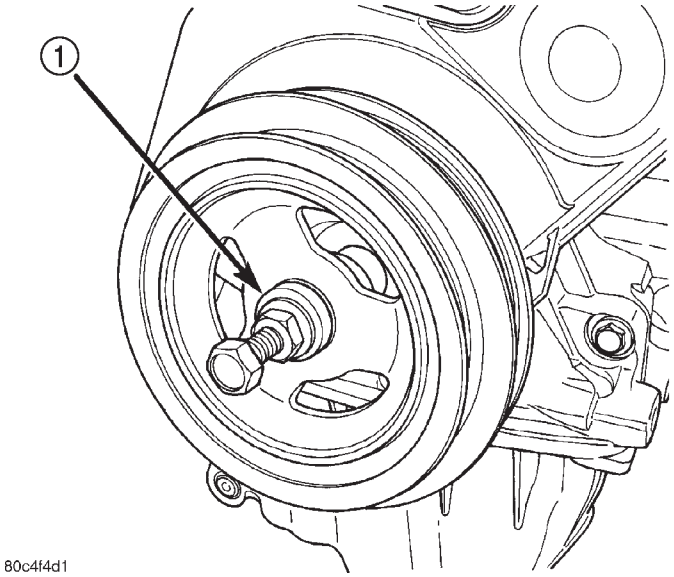

Fig. 106 Crankshaft Damper—Installation

1 – SPECIAL TOOL 6792

CRANKSHAFT OIL SEAL—REAR

REMOVAL

(1) Remove transaxle. Refer to TRANSAXLE for procedure.

(2) Remove flex plate.

(3) Insert a 3/16 flat bladed screwdriver between the dust lip and the metal case of the crankshaft seal. Angle the screwdriver (Fig. 107) through the dust lip against metal case of the seal. Pry out seal.

CAUTION: Do not permit the screwdriver blade to contact crankshaft seal surface. Contact of the screwdriver blade against crankshaft edge (chamfer) is permitted.

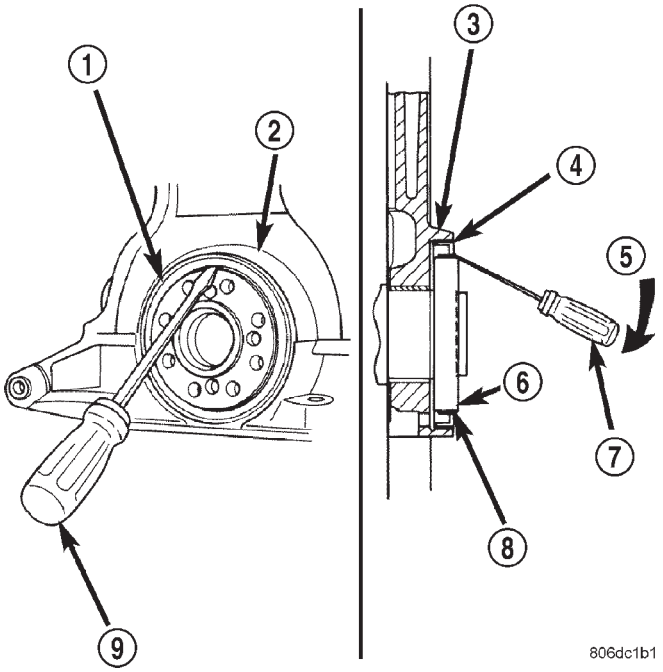

Fig. 107 Rear Crankshaft Oil Seal—Removal

1 – REAR CRANKSHAFT SEAL
2 – ENGINE BLOCK
3 – ENGINE BLOCK
4 – REAR CRANKSHAFT SEAL METAL CASE
5 – PRY IN THIS DIRECTION
6 – CRANKSHAFT
7 – SCREWDRIVER
8 – REAR CRANKSHAFT SEAL DUST LIP
9 – SCREWDRIVER

INSTALLATION

CAUTION: If burr or scratch is present on the crankshaft edge (chamfer), cleanup with 400 grit sand paper to prevent seal damage during installation of new seal.

NOTE: When installing seal, no lube on seal is needed.

(1) Place Special Tool 6926-1 Seal Guide on crankshaft (Fig. 108).

(2) Position seal over guide tool (Fig. 108). Guide tool should remain on crankshaft during installation of seal. Ensure that the lip of the seal is facing towards the crankcase during installation.

CAUTION: If the seal is driven into the block past flush, this may cause an oil leak.

(3) Drive the seal into the block using Special Tool 6926-2 and handle C-4171 (Fig. 109) until the tool bottoms out against the block (Fig. 110).

REMOVAL AND INSTALLATION (Continued)

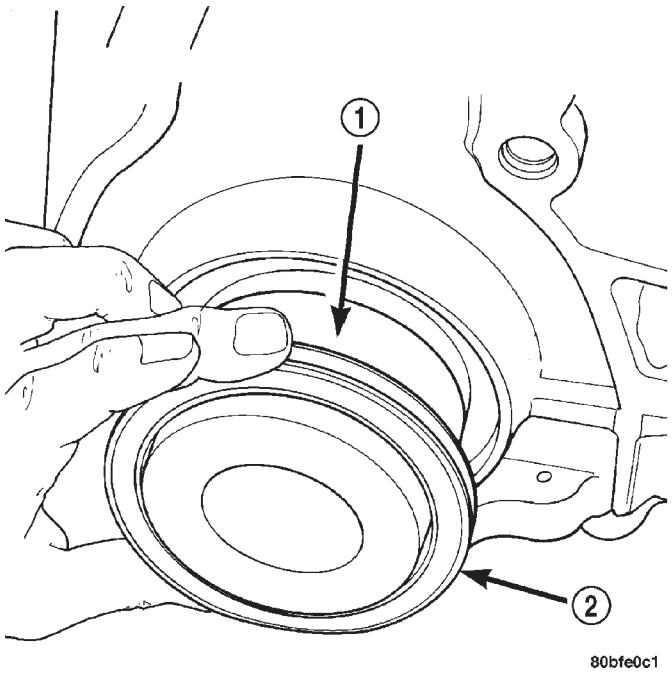

Fig. 108 Rear Crankshaft Seal and Special Tool 6926-1

1 – SPECIAL TOOL 6926–1 PILOT
2 – SEAL

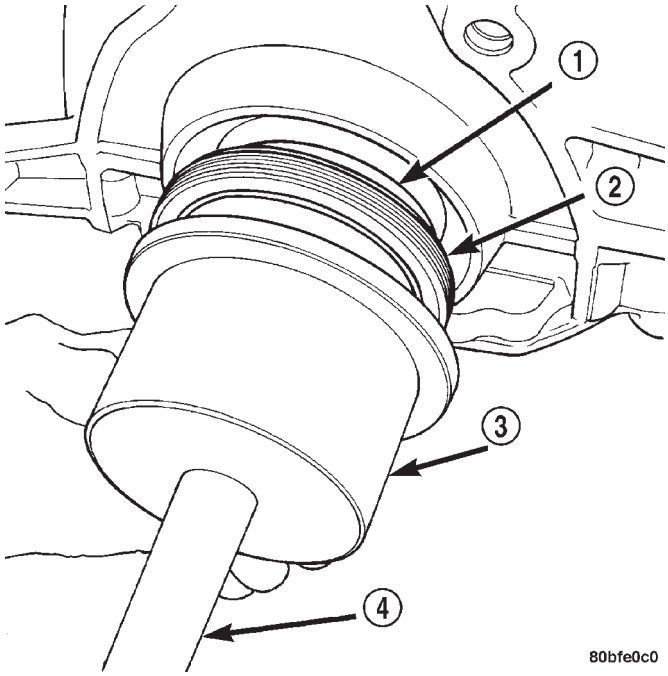

Fig. 109 Crankshaft Seal and Special Tools 6926-2 & C-4171

1 – SPECIAL TOOL 6926–1 PILOT
2 – SEAL
3 – SPECIAL TOOL 6926–2 INSTALLER
4 – SPECIAL TOOL C-4171

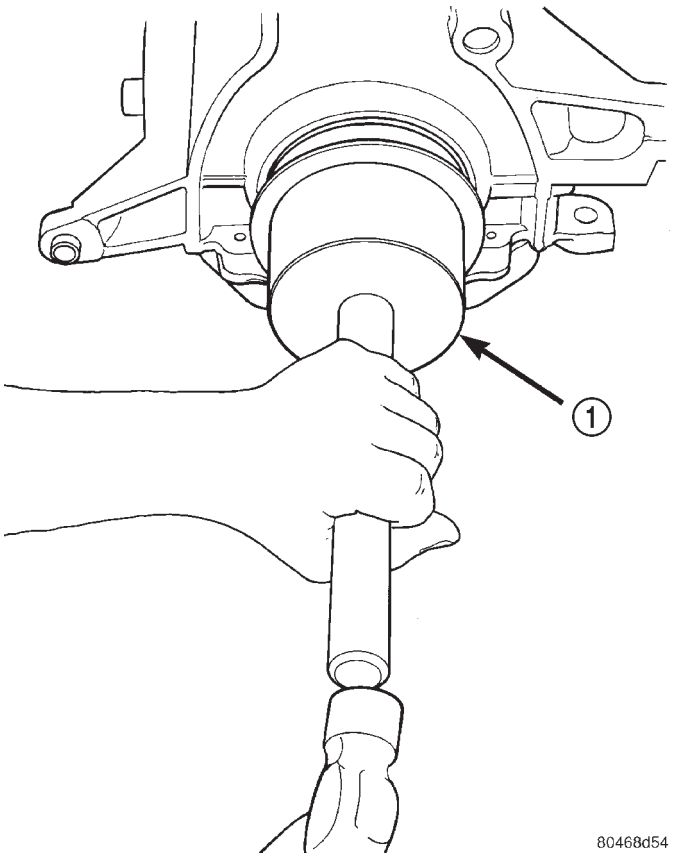

Fig. 110 Rear Crankshaft Seal—Installation

1 – SPECIAL TOOL 6926–2 INSTALLER

(4) Install flex plate. Apply Mopar® Lock & Seal Adhesive to bolt threads and tighten bolts to 95 N·m (70 ft. lbs.).

(5) Install transaxle. Refer to TRANSAXLE for procedure.

CRANKSHAFT

REMOVAL

(1) Remove engine assembly. Refer to procedure in this section.

(2) Remove structural collar from oil pan to transaxle housing.

(3) Separate transaxle from engine.

(4) Remove drive plate/flywheel.

(5) Remove crankshaft rear oil seal. Refer to procedure in this section.

(6) Mount engine on a suitable repair stand.

(7) Remove crankshaft damper, timing belt, and tensioner. Refer to procedures in this section.

(8) Remove camshaft sprocket and rear timing belt cover. Refer to procedures in this section.

(9) Remove crankshaft sprocket. Refer to procedure in this section.

REMOVAL AND INSTALLATION (Continued)

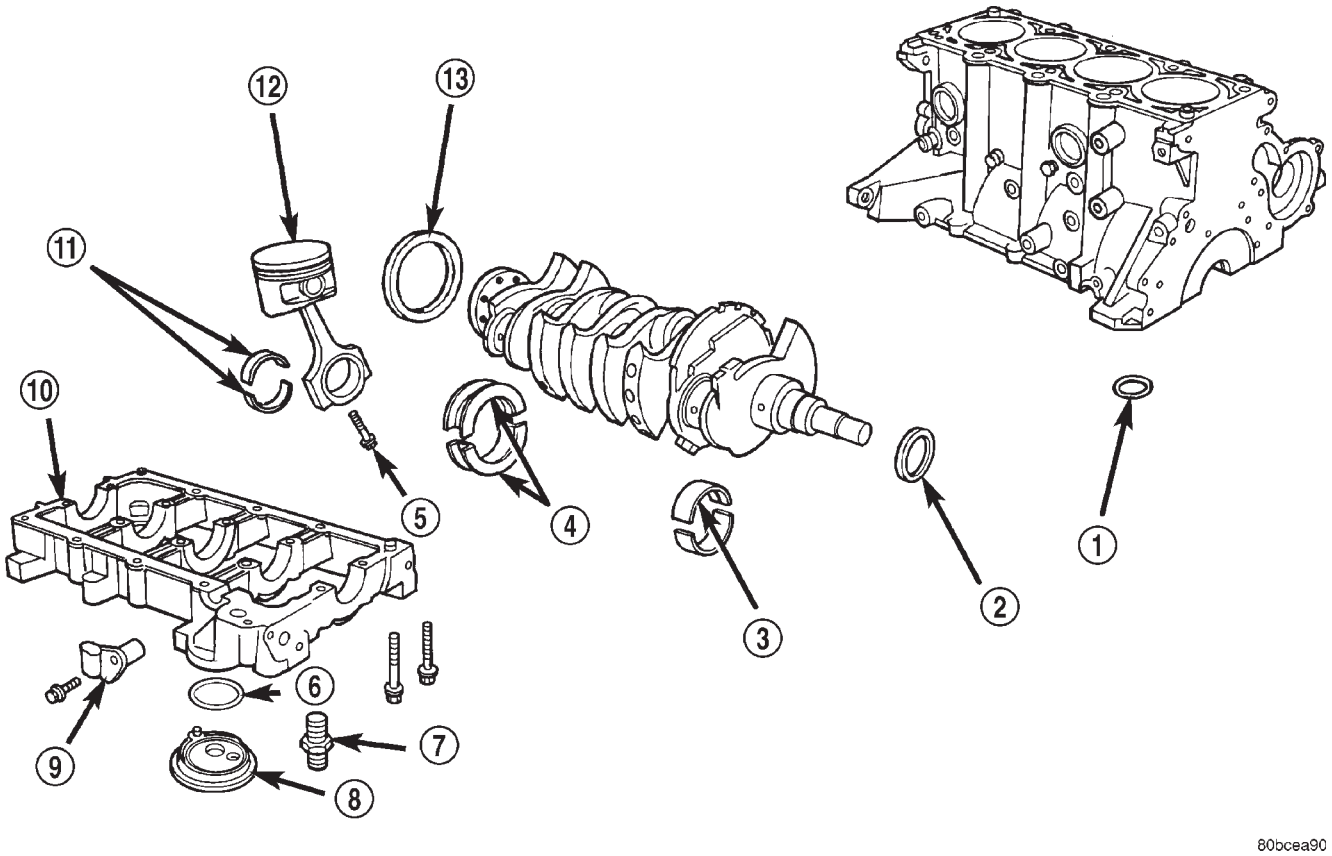

Fig. 111 Crankshaft and Components

1 – OIL PASSAGE O-RING
2 – SEAL
3 – UPPER BEARING (GROOVED)
4 – THRUST BEARINGS
5 – BOLT
6 – O-RING
7 – NIPPLE
8 – OIL FILTER ADAPTER
9 – CRANKSHAFT POSITION SENSOR (CPS)
10 – MAIN BEARING CAP/BED PLATE ASSEMBLY
11 – CONNECTING ROD BEARINGS
12 – PISTON AND CONNECTING ROD ASSEMBLY
13 – SEAL

(10) Remove lower torque strut/air conditioning compressor mounting bracket from engine (Fig. 112).

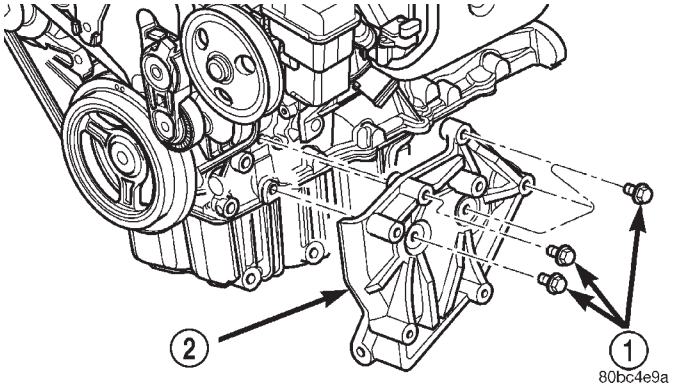

Fig. 112 Torque Strut Bracket

1 – BOLTS
2 – TORQUE STRUT BRACKET

(11) Remove oil filter and adapter.
(12) Remove oil pan.
(13) Remove oil pump pick-up tube.
(14) Remove oil pump.
(15) Remove crankshaft position sensor.
(16) Using a permanent ink or paint marker, identify cylinder number on each connecting rod cap.

CAUTION: DO NOT use a number stamp or a punch to mark connecting rods. Damage to connecting rod could occur.

(17) Remove all connecting rod bolts and caps. Care should be taken not to damage the fracture rod and cap surfaces.

NOTE: Do not reuse connecting rod bolts.

(18) Remove all main bearing cap and bedplate bolts from the engine block (Fig. 113).

REMOVAL AND INSTALLATION (Continued)

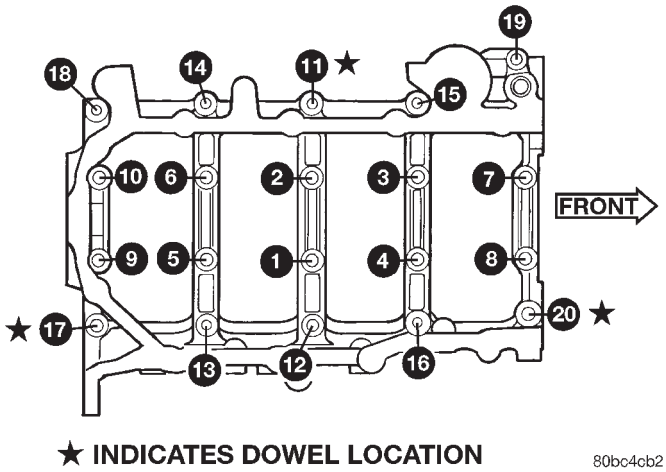

Fig. 113 Bedplate Bolts

(19) Using a mallet tap the bedplate loose from the engine block dowel pins.

CAUTION: Do not pry up on one side of the bedplate. Damage may occur to cylinder block and bedplate alignment.

(20) Bedplate should be removed evenly from the cylinder block dowel pins.

(21) Lift out crankshaft from cylinder block (Fig. 111). Be sure not to damage the main bearings or journals when removing the crankshaft.

CRANKSHAFT MAIN BEARINGS LOCATION

The crankshaft is supported in five main bearings. All upper bearing shells in the crankcase have oil grooves. All lower bearing shells installed in the (bedplate) main bearing cap are plain. Crankshaft end play is controlled by a flanged bearing on the number three main bearing journal (Fig. 114).

NOTE: The upper and lower main Bearing shells are Not interchangeable. The lower shells have a revised tab to prevent improper installation.

CRANKSHAFT MAIN JOURNALS INSPECTION

The crankshaft journals should be checked for excessive wear, taper and scoring. Limits on any crankshaft journals should be held to 0.0038 mm (0.0001 in.) for taper and 0.0035 (0.0001 in.) for out-of-round. Journal grinding should not exceed 0.305 mm (0.012 in.) under the standard journal diameter. DO NOT grind thrust faces of Number 3 main bearing. DO NOT nick crank pin or bearing fillets. After grinding, remove rough edges from crankshaft oil holes and clean out all passages.

CAUTION: With the nodular cast iron crankshafts used it is important that the final paper or cloth polish after any journal regrind be in the same direction as normal rotation in the engine.

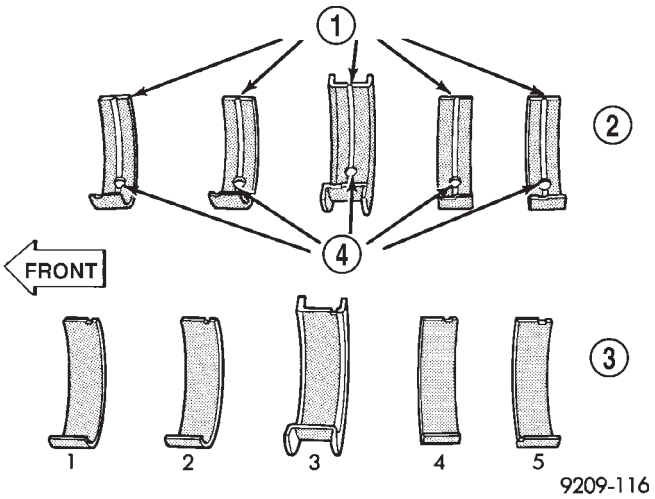

Fig. 114 Main Bearing Identification

1 – OIL GROOVES
2 – UPPER BEARINGS
3 – LOWER BEARINGS
4 – OIL HOLES

Upper and lower Number 3 bearing halves are flanged to carry the crankshaft thrust loads and are NOT interchangeable with any other bearing halves in the engine (Fig. 114). All bearing cap bolts removed during service procedures are to be cleaned and oiled before installation. Bearing shells are available in standard and the following undersized: 0.016 mm (0.0006 in.), 0.032 mm (0.0012 in.), 0.250 mm (0.010 in.). Never install an undersize bearing that will reduce clearance below specifications.

INSTALLATION

(1) Install the main bearing shells with the lubrication groove in the cylinder block. Install O-ring into recess in the block (Fig. 115).

(2) Make certain oil holes in block line up with oil hole in bearings and bearing tabs seat in the block tab slots.

CAUTION: Do Not get oil on the bedplate mating surface. It will affect the sealer ability to seal the bedplate to cylinder block.

(3) Oil the bearings and journals and install crankshaft in cylinder block.

CAUTION: Use only the specified anaerobic sealer on the bedplate or damage may occur to the engine.

REMOVAL AND INSTALLATION (Continued)

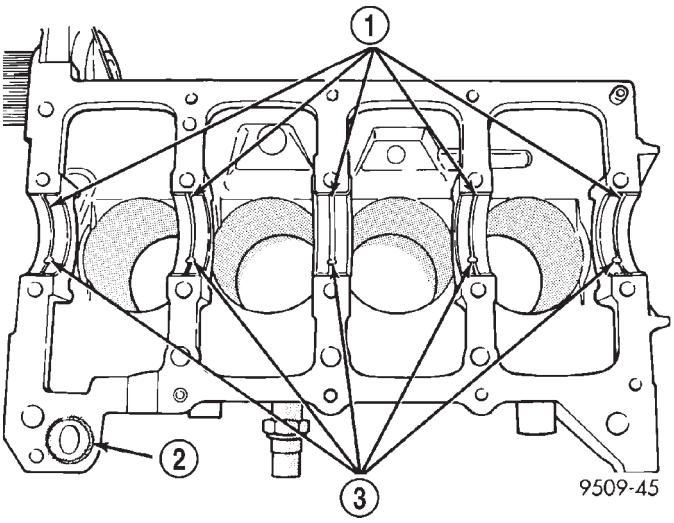

Fig. 115 Installing Main Bearing Upper Shell

1 – LUBRICATION GROOVES
2 – O-RING
3 – OIL HOLES

(4) Apply 1.5–2.0 mm (0.059–0.078 in.) bead of Mopar® Bed Plate Sealant to cylinder block as shown in (Fig. 116).

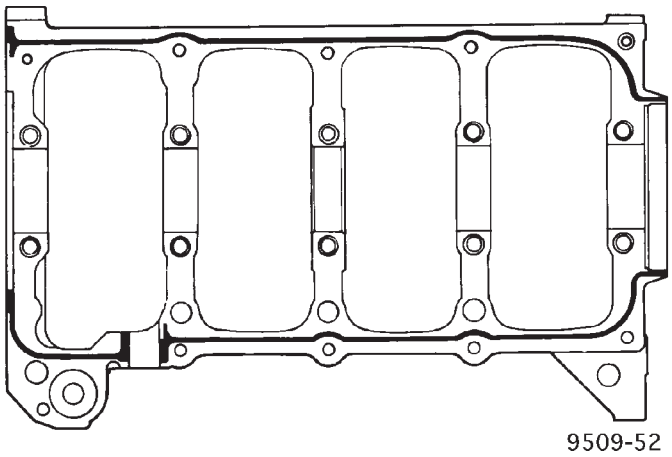

Fig. 116 Main Bearing Caps/Bedplate Sealing

(5) Install lower main bearings into main bearing cap/bedplate. Make certain the bearing tabs are seated into the bedplate slots. Install the main bearing/bedplate into engine block.

(6) Before installing the bolts oil threads with clean engine oil, wipe off any excess oil.

(7) Install main bearing bedplate to engine block bolts 11, 17 and 20 finger tight. Tighten these bolts down together until the bedplate contacts the cylinder block (Fig. 117).

(8) Install main bearing bedplate to engine block bolts (1–10) and torque each bolt to 81 N·m (60 ft. lbs.) in sequence shown in (Fig. 117).

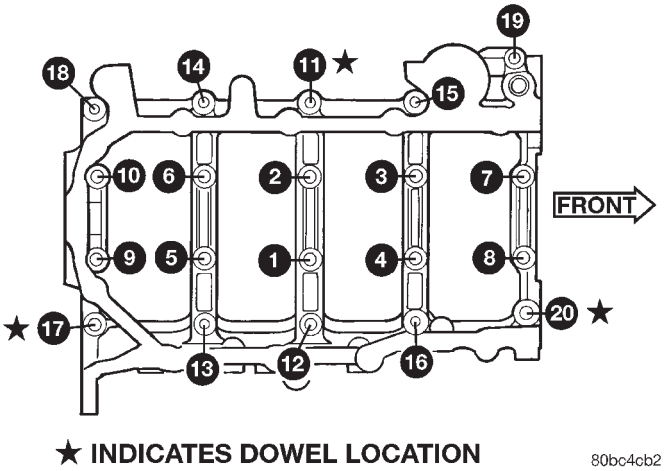

Fig. 117 Main Bearing Caps/Bedplate Torque Sequence

(9) Install main bearing bedplate to engine block bolts (11–20), with baffle studs in positions 12, 13 and 16 and torque each bolt to 34 N·m (25 ft. lbs.) in sequence shown in (Fig. 117).

(10) After the main bearing bedplate is installed, check the crankshaft turning torque. The turning torque should not exceed 5.6 N·m (50 in. lbs.).

(11) If crankshaft end play is to be checked, refer to service procedures in this section.

(12) Install connecting rod bearings and caps. Install new connecting rod bolts and tighten to 27 N·m (20 ft. lbs.) plus 1/4 turn.

(13) Install oil pump and crankshaft front oil seal.

(14) Install oil pick-up tube and oil pan. Refer to procedure in the section.

(15) Install oil filter adapter and filter.

(16) Install lower torque strut/air conditioning compressor mounting bracket to engine (Fig. 112).

(17) Install rear timing belt cover and camshaft sprocket.

(18) Install crankshaft sprocket, timing belt tensioner, timing belt, and cover.

(19) Install front engine mount bracket.

(20) Remove engine from repair stand and position on Special Tools 6135 and 6710 Engine Dolly and Cradle. Install safety straps around the engine to cradle and tighten and lock them into position.

(21) Install crankshaft rear oil seal. Refer to procedure in this section.

(22) Install drive plate/flywheel. Apply Mopar® Lock & Seal Adhesive to bolt threads and tighten to 95 N·m (70 ft. lbs.).

(23) Install transaxle to engine.

(24) Install structural collar. Refer to procedure in this section.

(25) Install engine assembly. Refer to procedure in this section.

REMOVAL AND INSTALLATION (Continued)

(26) Perform camshaft and crankshaft timing relearn procedure as follows:

- Connect the DRB scan tool to the data link (diagnostic) connector. This connector is located in the passenger compartment; at the lower edge of instrument panel; near the steering column.
- Turn the ignition switch on and access the "miscellaneous" screen.
- Select "re-learn cam/crank" option and follow directions on DRB screen.

PISTON AND CONNECTING ROD

REMOVAL

(1) Remove cylinder head and oil pan. Refer to procedures in this section.

(2) Remove top ridge of cylinder bores with a reliable ridge reamer before removing pistons from cylinder block. **Be sure to keep tops of pistons covered during this operation**. Mark piston with matching cylinder number (Fig. 118).

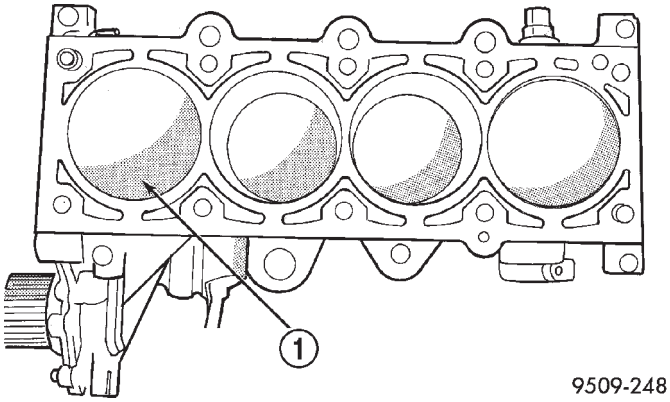

Fig. 118 Piston Markings

1 – WEIGHT DESIGNATION AND DIRECTIONAL ARROW WILL BE IMPRINTED IN THIS AREA

CAUTION: DO NOT use a number stamp or a punch to mark connecting rods. Damage to connecting rod could occur.

(3) Using a permanent ink marker or scribe tool mark the cylinder number on the side of the rod and cap (Fig. 119) for identification.

(4) Pistons will have a stamping in the approximate location shown in (Fig. 118). These stamps will be either a directional arrow or a weight identification for the assembly. L is for light and H is for heavy. These assemblies should all be the same weight class. Service piston assemblies are marked with a S and can be used with either L or H production assemblies. The weight designation stamps should face toward the timing belt side of the engine.

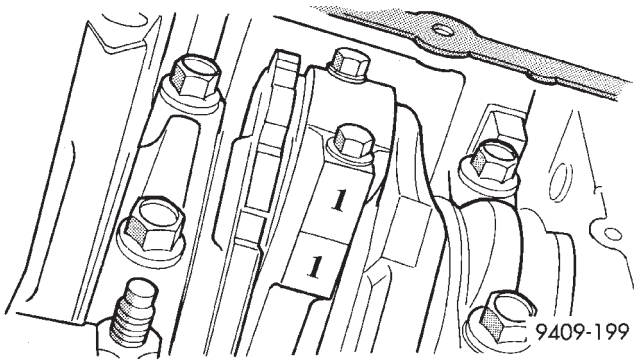

Fig. 119 Identify Connecting Rod to Cylinder

(5) Pistons and connecting rods must be removed from top of cylinder block. Rotate crankshaft so that each connecting rod is centered in cylinder bore.

(6) Remove connecting rod cap bolts **Do not use old bolts if reinstalling connecting rod.** Push each piston and rod assembly out of cylinder bore.

NOTE: Be careful not to nick crankshaft journals.

(7) After removal, install bearing cap on the mating rod.

(8) Piston and rods are serviced as an assembly.

PISTON RING—REMOVAL

(1) ID mark on face of upper and intermediate piston rings must point toward piston crown.

(2) Using a suitable ring expander, remove upper and intermediate piston rings (Fig. 120).

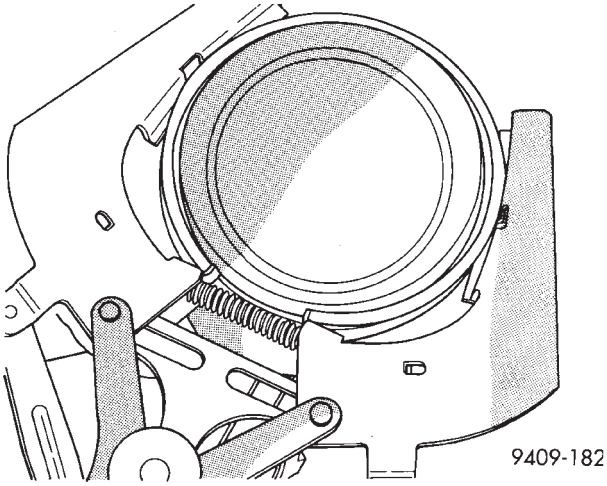

Fig. 120 Piston Rings—Removing and Installing

(3) Remove the upper oil ring side rail, lower oil ring side rail and then oil ring expander from piston.

(4) Clean ring grooves of any carbon deposits.

PISTON RINGS—INSTALLATION

(1) Install rings with manufacturers I.D. mark facing up, to the top of the piston (Fig. 121).

REMOVAL AND INSTALLATION (Continued)

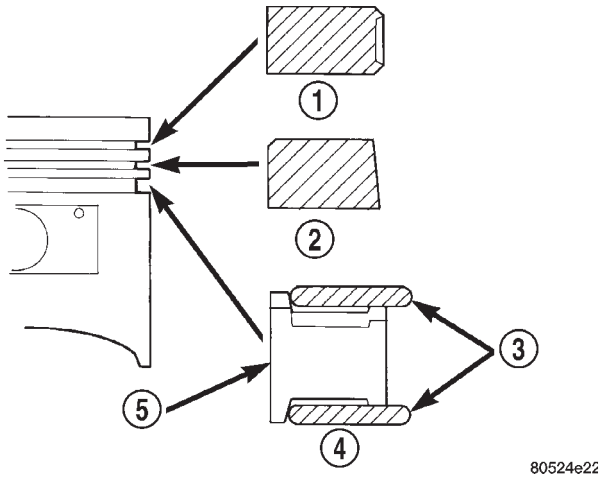

Fig. 121 Piston Ring Installation

1 – NO. 1 PISTON RING
2 – NO. 2 PISTON RING
3 – SIDE RAIL
4 – OIL RING
5 – SPACER EXPANDER

CAUTION: Install piston rings in the following order:

a. Oil ring expander.
b. Upper oil ring side rail.
c. Lower oil ring side rail.
d. No. 2 Intermediate piston ring.
e. No. 1 Upper piston ring.
f. Install the side rail by placing one end between the piston ring groove and the expander. Hold end firmly and press down the portion to be installed until side rail is in position. **Do not use a piston ring expander (Fig. 122).**

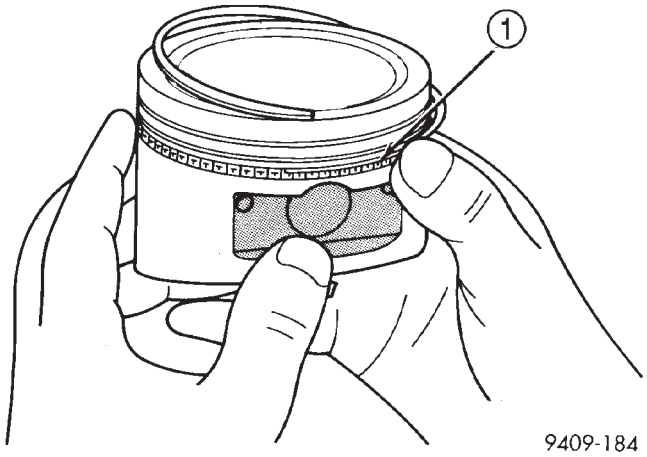

Fig. 122 Installing Side Rail

1 – SIDE RAIL END

(2) Install upper side rail first and then the lower side rail.

(3) Install No. 2 piston ring and then No. 1 piston ring (Fig. 121).

(4) Position piston ring end gaps as shown in (Fig. 123).

(5) Position oil ring expander gap at least 45° from the side rail gaps but **not** on the piston pin center or on the thrust direction. Staggering ring gap is important for oil control.

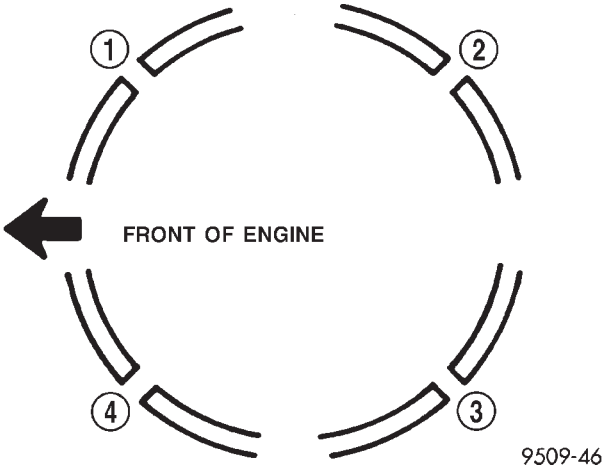

Fig. 123 Piston Ring End Gap Position

1 – GAP OF LOWER SIDE RAIL
2 – NO. 1 RING GAP
3 – GAP OF UPPER SIDE RAIL
4 – NO. 2 RING GAP AND SPACER EXPANDER GAP

PISTON AND ROD —INSTALLATION

(1) Before installing pistons and connecting rod assemblies into the bore, be sure that compression ring gaps are staggered so that neither is in line with oil ring rail gap.

(2) Before installing the ring compressor, make sure the oil ring expander ends are butted and the rail gaps located as shown in (Fig. 123).

(3) Immerse the piston head and rings in clean engine oil, slide the ring compressor, over the piston (Fig. 124). **Be sure position of rings does not change during this operation**.

(4) The weight stamp designation L or H will be in the front half of the piston should face toward the front of the engine for SOHC engine. The arrow should face toward the front of the engine for DOHC engine (Fig. 118).

(5) Rotate crankshaft so that the connecting rod journal is on the center of the cylinder bore. Insert rod and piston assembly into cylinder bore and carefully guide rod over the crankshaft journal.

(6) Tap the piston down in cylinder bore, using a hammer handle. At the same time, guide connecting rod into position on connecting rod journal.

(7) Install rod caps. Install **New** bolts and tighten to 27 N·m (20 ft. lbs.) Plus 1/4 turn.

REMOVAL AND INSTALLATION (Continued)

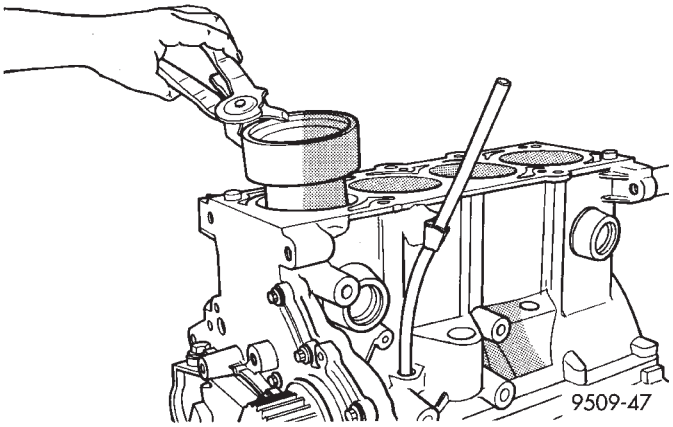

Fig. 124 Installing Piston

(8) Install cylinder head and oil pan. Refer to procedures in this section.

OIL FILTER ADAPTER

REMOVAL

(1) Remove oil filter.
(2) Remove oil filter adapter (Fig. 125).

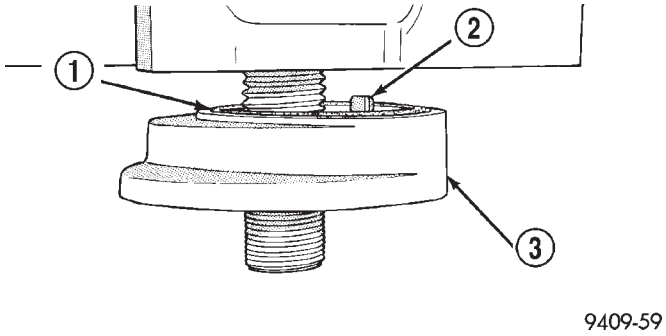

Fig. 125 Engine Oil Filter Adapter to Engine Block

1 – O-RING
2 – LOCATING ROLL PIN
3 – OIL FILTER ADAPTER

INSTALLATION

(1) Clean sealing surfaces.
(2) Ensure O-ring is in the groove on adapter.
(3) Align roll pin into engine block and tighten assembly to 80 N·m (60 ft. lbs.) (Fig. 125).

OIL FILTER

REMOVE AND INSTALL

CAUTION: When servicing the oil filter (Fig. 126), avoid deforming the filter. Use an appropriate oil filter removing tool. Position filter wrench strap close the seam at the base of the filter. The oil filter seam that joins the can to the base, is reinforced by the base plate.

(1) Turn filter counterclockwise to remove.
(2) Clean and check the filter mounting surface. The surface must be smooth, flat and free of debris or old pieces of rubber.
(3) To install, lubricate new filter gasket. Screw filter on until gasket contacts base. Tighten to 21 N·m (15 ft. lbs.).

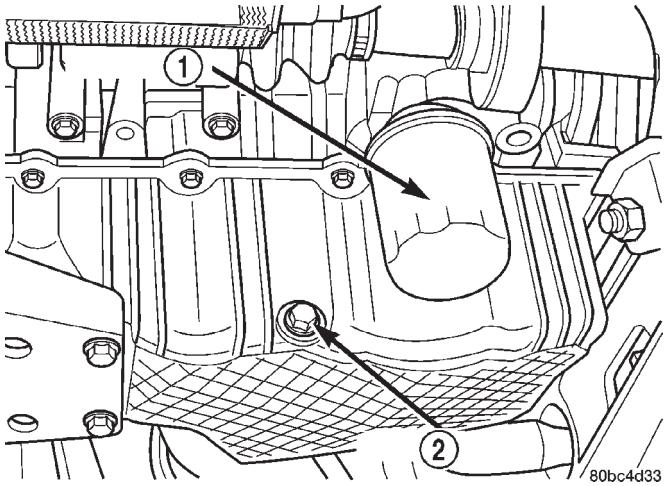

Fig. 126 Engine Oil Filter

1 – OIL FILTER
2 – DRAIN PLUG

OIL PUMP

REMOVAL

(1) Disconnect negative cable from battery.
(2) Remove timing belt. Refer to procedure in this section.
(3) Remove timing belt rear cover. Refer to procedure in this section.
(4) Remove oil pan. Refer to procedure in this section.
(5) Remove crankshaft sprocket using Special Tools 6793 and C-4685-C2 (Fig. 127).
(6) Remove crankshaft key (Fig. 128).
(7) Remove oil pick-up tube.
(8) Remove oil pump (Fig. 129) and front crankshaft seal.

INSTALLATION

(1) Make sure all surfaces are clean and free of oil and dirt.
(2) Apply Mopar® Gasket Maker to oil pump as shown in (Fig. 130). Install O-ring into oil pump body discharge passage.
(3) Prime oil pump with engine oil before installation.
(4) Align oil pump rotor flats with flats on crankshaft. Install the oil pump to the block (Fig. 129).

REMOVAL AND INSTALLATION (Continued)

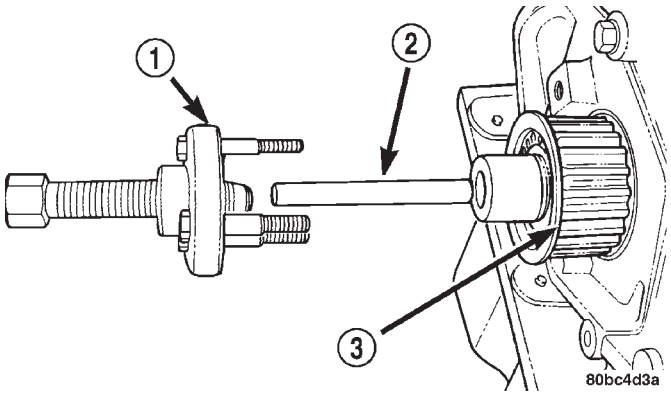

Fig. 127 Crankshaft Sprocket—Removal

1 – SPECIAL TOOL 6793
2 – SPECIAL TOOL C-4685–C2
3 – CRANKSHAFT SPROCKET

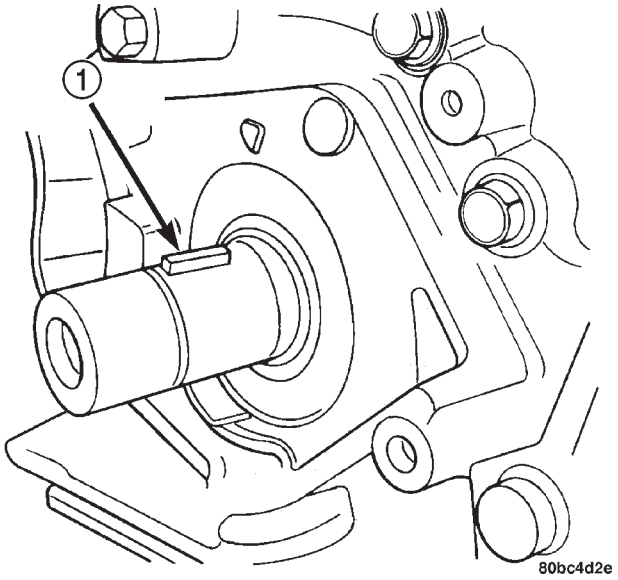

Fig. 128 Crankshaft Key

1 – CRANKSHAFT KEY

CAUTION: To align, the front crankshaft seal MUST be out of pump, or damage may result.

(5) Install new front crankshaft seal using Special Tool 6780 (Fig. 131).

(6) Install crankshaft key (Fig. 128).

(7) Install crankshaft sprocket using Special Tool 6792 (Fig. 132).

(8) Install oil pump pick-up tube.

(9) Install oil pan. Refer to procedure in this section.

(10) Install timing belt rear cover. Refer to procedure in this section.

(11) Install timing belt. Refer to procedure in this section.

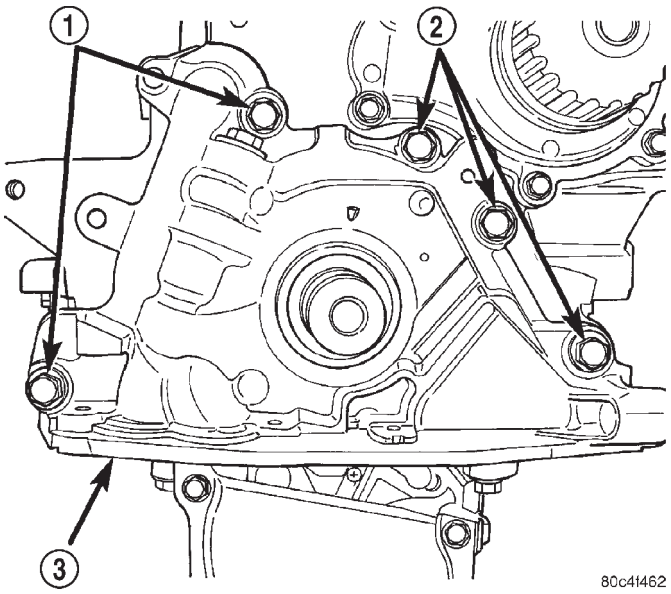

Fig. 129 Oil Pump

1 – BOLTS
2 – BOLTS
3 – OIL PUMP

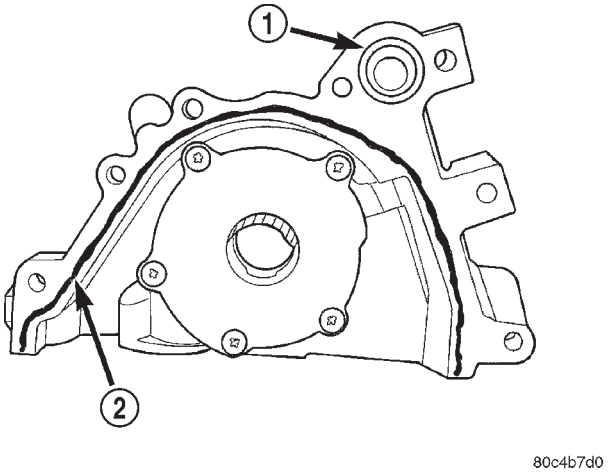

Fig. 130 Oil Pump Sealing

1 – O-RING
2 – SEALER LOCATION

ENGINE CORE PLUGS

REMOVAL

Using a blunt tool such as a drift or a screwdriver and a hammer, strike the bottom edge of the cup plug (Fig. 133). With the cup plug rotated, grasp firmly with pliers or other suitable tool and remove plug (Fig. 133).

CAUTION: Do not drive cup plug into the casting as restricted cooling can result and cause serious engine problems.

REMOVAL AND INSTALLATION (Continued)

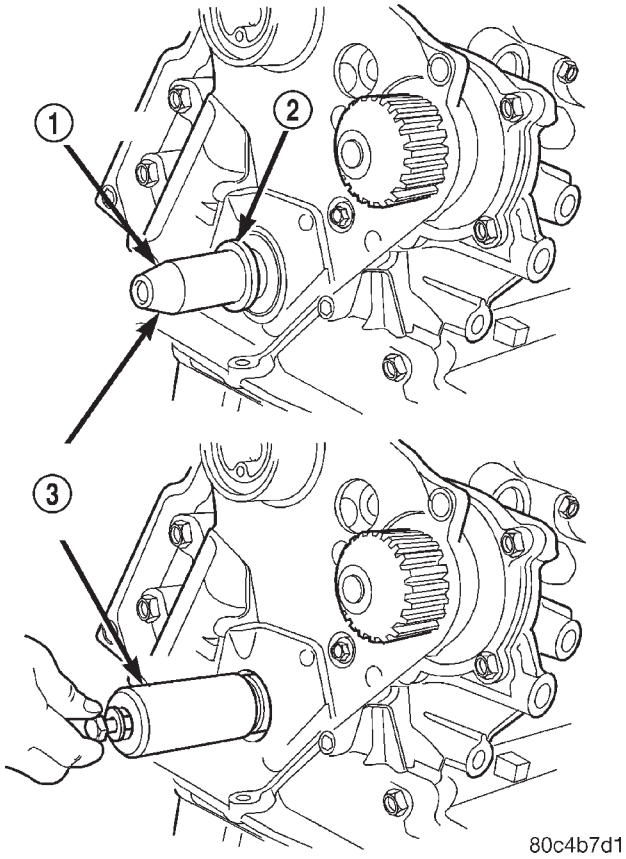

Fig. 131 Front Crankshaft Seal—Installation

1 – PROTECTOR
2 – SEAL
3 – SPECIAL TOOL 6780

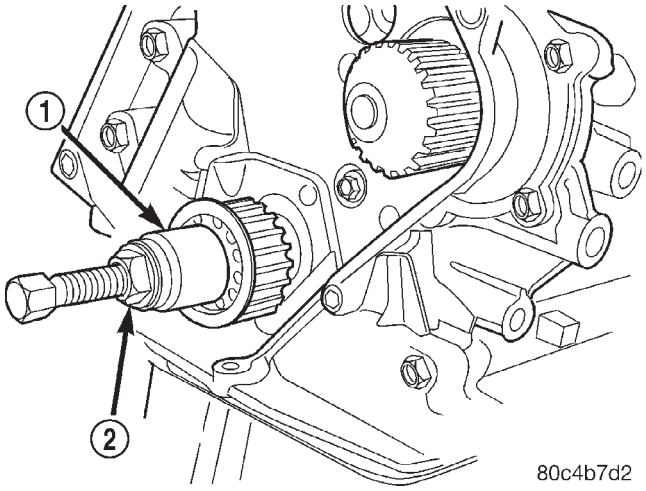

Fig. 132 Crankshaft Sprocket—Installation

1 – SPECIAL TOOL 6792
2 – TIGHTEN NUT TO INSTALL

INSTALLATION

Thoroughly clean all debris/rust from inside of cup plug hole in cylinder block or head. Be sure to remove old sealer. Lightly coat inside of cup plug hole with Mopar® Stud and Bearing Mount Adhesive. Make certain the new plug is cleaned of all oil or grease. Using a proper driver, drive plug into hole so that the sharp edge of the plug is at least 0.5 mm (0.020 inch.) inside the lead in chamfer (Fig. 133).

It is not necessary to wait for curing of the sealant. The cooling system can be refilled and the vehicle placed in service immediately.

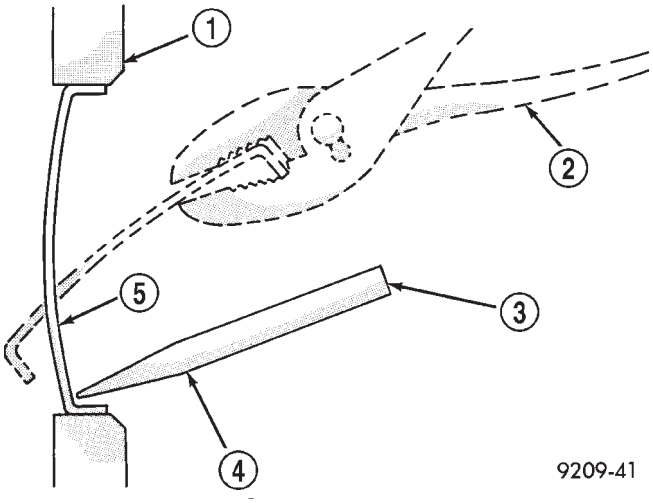

Fig. 133 Core Hole Plug Removal

1 – CYLINDER BLOCK
2 – REMOVE PLUG WITH PLIERS
3 – STRIKE HERE WITH HAMMER
4 – DRIFT PUNCH
5 – CUP PLUG

DISASSEMBLY AND ASSEMBLY

OIL PUMP

DISASSEMBLY

(1) To remove the relief valve, proceed as follows:

(a) Remove the threaded plug and gasket from the oil pump (Fig. 134).

(b) Remove spring and relief valve (Fig. 134).

(2) Remove oil pump cover fasteners, and lift off cover (Fig. 135).

(3) Remove pump rotors (Fig. 135).

(4) Wash all parts in a suitable solvent and inspect carefully for damage or wear.

ASSEMBLY

(1) Assemble pump, using new parts as required. **Install the inner rotor with chamfer facing the cast iron oil pump cover.**

(2) Prime oil pump before installation by filling rotor cavity with engine oil.

DISASSEMBLY AND ASSEMBLY (Continued)

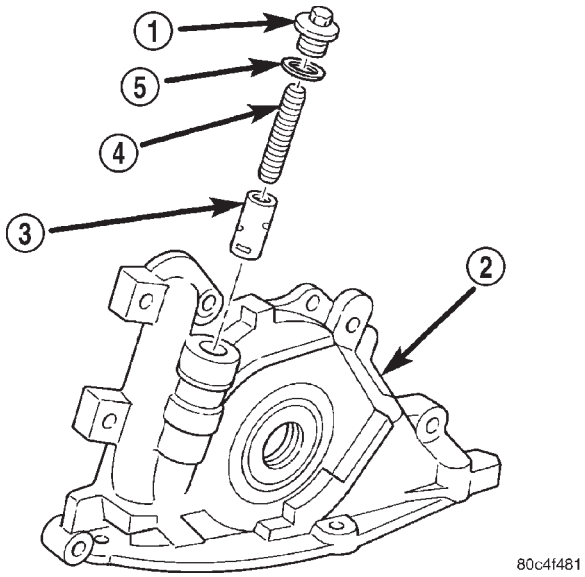

Fig. 134 Oil Pressure Relief Valve

1 – PLUG
2 – OIL PUMP BODY
3 – RELIEF VALVE
4 – SPRING
5 – SEAL

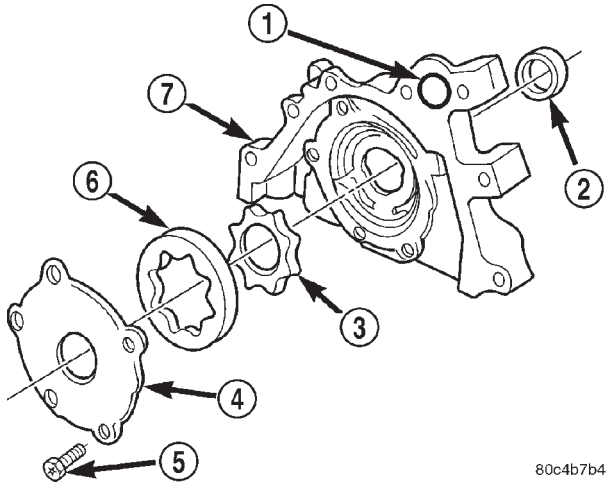

Fig. 135 Oil Pump

1 – O-RING
2 – SEAL
3 – INNER ROTOR
4 – OIL PUMP COVER
5 – FASTENER
6 – OUTER ROTOR
7 – OIL PUMP BODY

(3) Install cover and tighten fasteners to 12 N·m (105 in. lbs.) (Fig. 135).

CAUTION: Oil pump pressure relief valve must be installed as shown in (Fig. 134) or serious damage may occur.

(4) Install relief valve, spring, gasket and cap as shown in (Fig. 134). Tighten cap to 41 N·m (30 ft. lbs.).

VALVE SERVICE—CYLINDER HEAD REMOVED

REMOVAL

(1) With cylinder head removed, compress valve springs using Special Tool C-3422-B with Adaptor 6526.

(2) Remove valve retaining locks, valve spring retainers, valve stem seals and valve springs.

(3) Before removing valves, **remove any burrs from valve stem lock grooves to prevent damage to the valve guides.** Identify valves to insure installation in original location.

VALVE GUIDES

(1) Remove carbon and varnish deposits from inside of valve guides with a reliable guide cleaner.

(2) Using a small hole gauge and a micrometer, measure valve guides in 3 places top, middle and bottom (Fig. 136). Refer to Engine Specifications. Replace guides if they are not within specification.

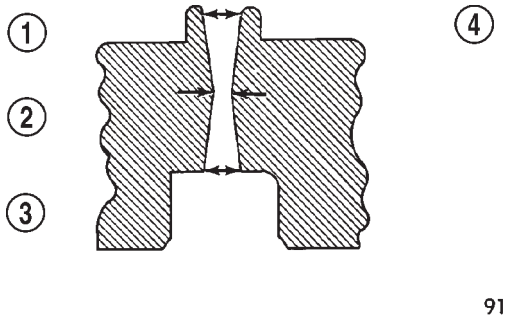

Fig. 136 Checking Wear on Valve Guide—Typical

1 – TOP
2 – MIDDLE
3 – BOTTOM
4 – CUT AWAY VIEW OF VALVE GUIDE MEASUREMENT LOCATIONS

CHECK VALVE GUIDE HEIGHT

TESTING VALVE SPRINGS

(1) Whenever valves have been removed for inspection, reconditioning or replacement, valve springs should be tested Special Tool C-647. As an example, the compression length of the spring to be tested is 33.34 mm (1-5/16 in.). Turn tool table until surface is in line with the 33.34 mm (1-5/16 in.) mark on the threaded stud and the zero mark on the front. Place spring over stud on the table and lift compressing lever to set tone device (Fig. 137). Pull on torque wrench until ping is heard. Take reading on torque wrench at this instant. Multiply this reading by two.

DISASSEMBLY AND ASSEMBLY (Continued)

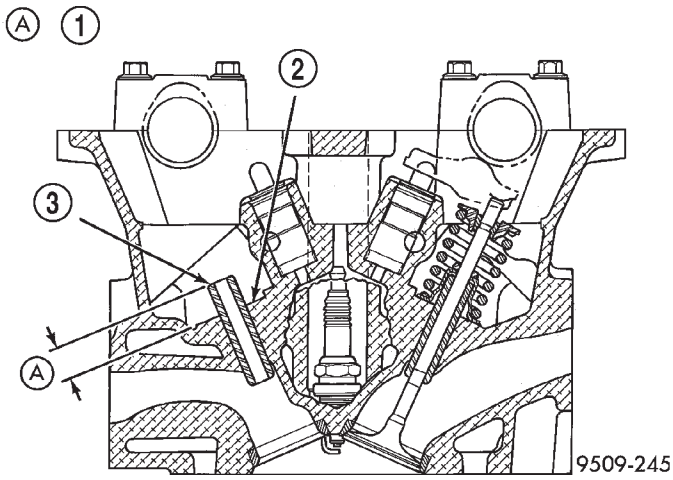

Valve Guide Height

1 – 13.25 — 13.75 mm (.521 —.541 in.)
2 – SPRING SEAT
3 – VALVE GUIDE

This will give the spring load at test length. Fractional measurements are indicated on the table for finer adjustments. Discard the springs that do not meet specifications. The Following specifications apply to both intake and exhaust valve springs:

- Valve Closed Compression Pressure: 246 – 270 N @ 38.0 mm (55 – 60 lbs. @ 1.50 in.)
- Valve Open Compression Pressure: 549 – 611 N @ 29.25 mm (123 – 137 lbs. @ 1.17 in.)

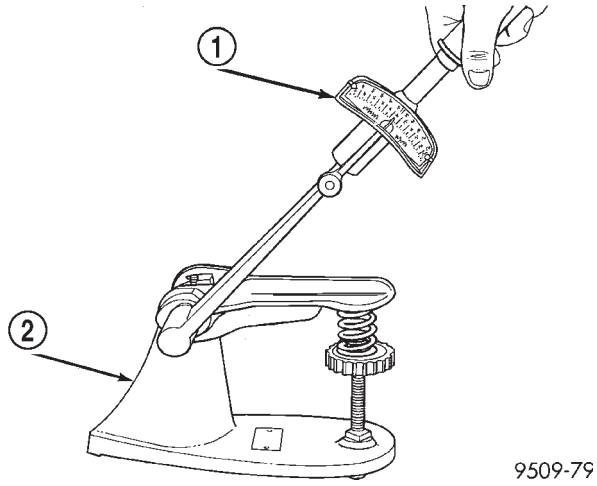

Fig. 137 Testing Valve Spring

1 – TORQUE WRENCH
2 – VALVE SPRING TESTER

(2) Verify springs are not distorted with a steel square and surface plate. Check springs from both ends. Replace spring if the spring is more than 1.5 mm (1/16 in.) out of square.

REFACING VALVES AND VALVE SEATS

(1) The intake and exhaust valve seats and valve face have a 45 and a 45 1/2 degree angles.

(2) Inspect the remaining margin after the valves are refaced (Fig. 138). Intake valves with less than 1.2 mm (3/64 in.) margin and Exhaust valves with less than 0.9 mm (1/32 in.) margin should be discarded.

(3) When refacing valve seats, it is important that the correct size valve guide pilot be used for the reseating stones. A true and complete surface must be obtained.

(4) Measure the concentricity of valve seat and valve guide using a valve seat runout dial indicator. Total runout should not exceed. 0.051 mm (0.002 in.) (total indicator reading).

(5) Inspect the valve seat with Prussian blue to determine where the valve contacts the seat. To do this, coat valve seat **LIGHTLY** with Prussian blue then set valve in place. Rotate the valve with light pressure. If the blue is transferred to the center of valve face, contact is satisfactory. If the blue is transferred to top edge of the valve face, lower valve seat with a 15 degrees stone. If the blue is transferred to the bottom edge of valve face raise valve seat with a 65 degrees stone.

- Intake valve seat diameter is 34.37 – 34.63 mm (1.353 – 1.363 in.)
- Exhaust valve seat diameter is 29.37 – 29.63 mm (1.156 – 1.166 in.)

(6) Valve seats which are worn or burned can be reworked, provided that correct angle and seat width are maintained. The intake valve seat must be serviced when the valve seat width is 2.0 mm (0.079 in.) or greater. The exhaust valve seat must be serviced when the valve seat width is 2.5 mm (0.098 in.) or greater. Otherwise the cylinder head must be replaced. For specification, refer to Engine Specifications.

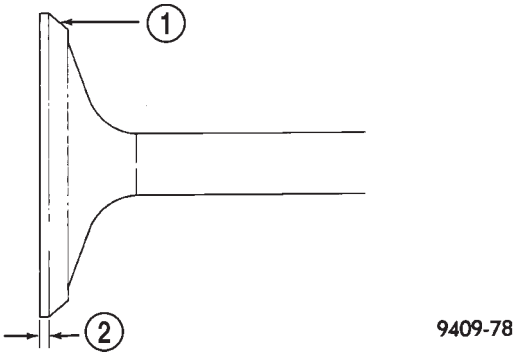

Fig. 138 Refacing Intake and Exhaust Valves

1 – VALVE FACE
2 – VALVE MARGIN

DISASSEMBLY AND ASSEMBLY (Continued)

(7) When seat is properly positioned the width of intake and exhaust seats should be 0.90–1.30 mm (0.035–0.051 in.) (Fig. 139).

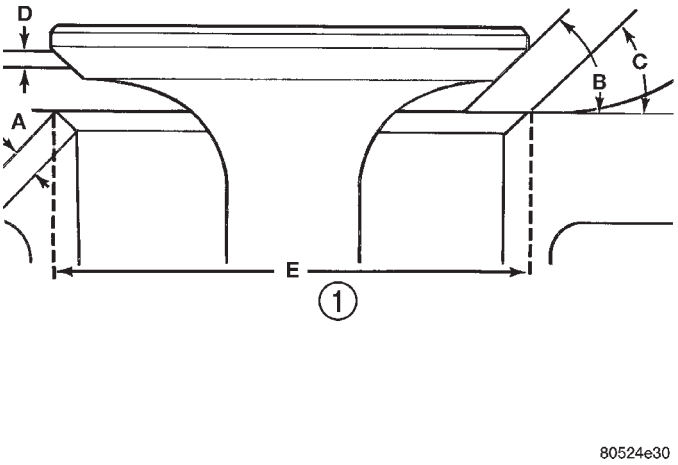

Fig. 139 Refacing Valve Seats

1 – A-SEAT WIDTH (INTAKE AND EXHAUST 0.90 TO 1.30 MM (0.035 TO 0.051 IN.)
B-FACE ANGLE (INTAKE & EXHAUST: 44 1/2°–45°)
C-SEAT ANGLE (INTAKE & EXHAUST: 45°–45 1/2°)
D-SEAT CONTACT AREA
E-SEAT DIAMETER

(8) Check valve tip height dimensions A after grinding the valve seats or faces (Fig. 140). Grind valve tip to 47.99 mm (1.889 in.) for exhaust valve and 48.04 mm (1.891 in.) for intake valve when installed in the head (Fig. 140). The valve tip chamfer may need to be reground to prevent seal damage when the valve is installed.

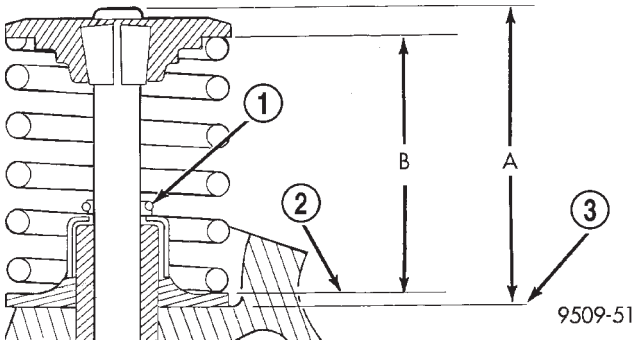

Fig. 140 Checking Spring Installed Height and Valve Tip Height Dimensions

1 – GARTER SPRING
2 – VALVE SPRING SEAT
3 – CYLINDER HEAD SURFACE

VALVE INSTALLATION

(1) Coat valve stems with clean engine oil and insert in cylinder head.

(2) Install new valve stem seals on all valves using a valve stem seal tool (Fig. 141). The valve stem seals should be pushed firmly and squarely over valve guide.

CAUTION: If oversize valves are used, there is only one oversize valve available. The same stem seal is used on both the standard and oversize valve.

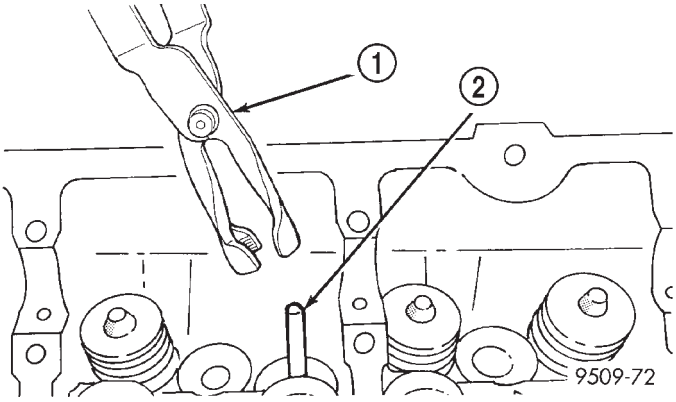

Fig. 141 Valve Stem Oil Seal Tool

1 – VALVE SEAL TOOL
2 – VALVE STEM

(3) Install valve springs and retainers. Compress valve springs only enough to install locks, taking care not to misalign the direction of compression. Nicked valve stems may result from misalignment of the valve spring compressor.

CAUTION: When depressing the valve spring retainers with valve spring compressor the locks can become dislocated. Check to make sure both locks are in their correct location after removing tool.

(4) Check the valve spring installed height B after refacing the valve and seat (Fig. 140). Make sure measurements are taken from top of spring seat to the bottom surface of spring retainer. If height is greater than 38.75 mm (1.525 in.), install a 7.620 mm (0.030 in.) spacer under the valve spring seat to bring spring height back within specification.

(5) Install cam followers and camshaft as previously described in this section.

(6) Checking dry lash. Dry lash is the amount of clearance that exists between the base circle of an installed cam and the rocker arm roller when the adjuster is drained of oil and completely collapsed. Specified dry lash is 1.17 mm (0.046 in.) for intake and 1.28 mm (0.050 in.) for exhaust. After performing dry lash check, refill adjuster with oil and allow 10 minutes for adjuster or adjusters to bleed down before rotating cam.

CLEANING AND INSPECTION

INTAKE MANIFOLD

CLEAN AND INSPECT

Check for:

- Inspect manifold for cracks or distortions.
- Check for torn gasket at the mating surface of the manifold.

EXHAUST MANIFOLD

CLEAN AND INSPECT

(1) Discard gasket and clean all gasket surfaces of manifolds and cylinder head.

(2) Test manifold gasket surfaces for flatness with straight edge. Surface must be flat within 0.15 mm per 300 mm (.006 in. per foot) of manifold length.

(3) Inspect manifolds for cracks or distortion. Replace manifold if necessary.

CYLINDER HEAD

CLEANING

Remove all gasket material from cylinder head. Be careful not to gouge or scratch the aluminum head sealing surface. Clean all engine oil passages.

To ensure engine gasket sealing, proper surface preparation must be performed, especially with the use of aluminum engine components and multi-layer steel cylinder head gaskets.

Never use the following to clean aluminum gasket surfaces:

- Metal scraper
- Abrasive pad or paper to clean cylinder block and head
- High speed power tool with an abrasive pad or a wire brush (Fig. 142)

NOTE: Multi-Layer Steel (MLS) head gaskets require a scratch free sealing surface.

Only use the following for cleaning gasket surfaces:

- Solvent or a commercially available gasket remover
- Plastic or wood scraper (Fig. 142)
- Drill motor with 3M Roloc™ Bristle Disc (white or yellow) (Fig. 142)

CAUTION: Excessive pressure or high RPM can damage the sealing surfaces. The mild (white, 120 grit) bristle disc is recommended. If necessary, the medium (yellow, 80 grit) bristle disc may be used on cast iron surfaces with care.

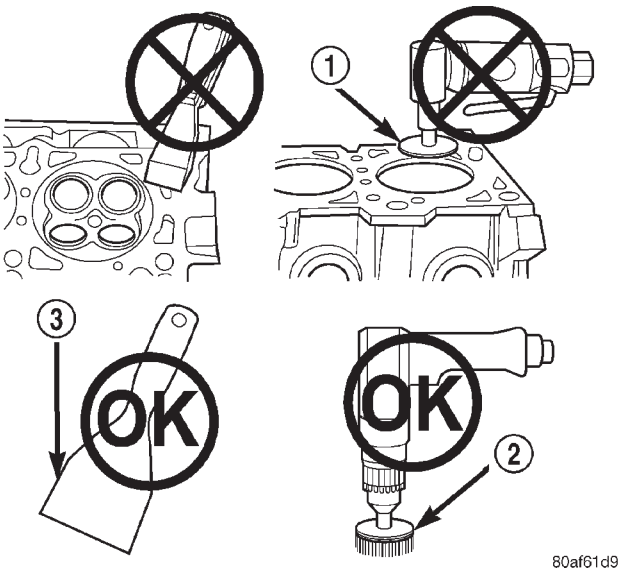

Fig. 142 Proper Tool Usage For Surface Preparation

1 – ABRASIVE PAD
2 – 3M ROLOC™ BRISTLE DISC
3 – PLASTIC/WOOD SCRAPER

INSPECTING CYLINDER HEAD

Check cylinder head for flatness with a straight edge. Cylinder head must be flat within 0.1 mm (0.004 in.) (Fig. 143).

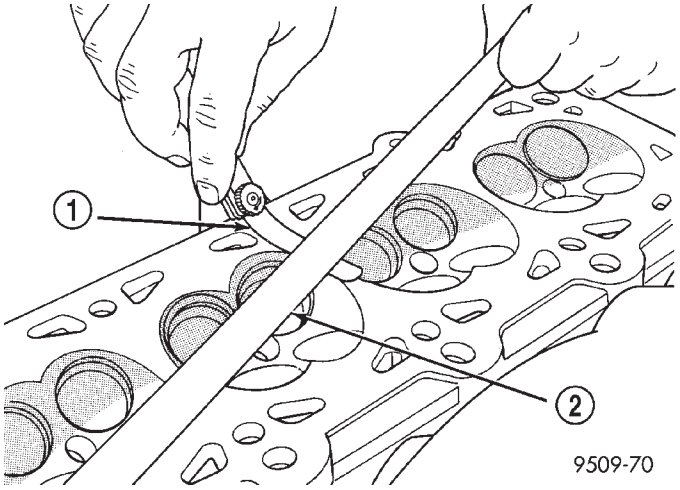

Fig. 143 Checking Cylinder Head Flatness

1 – FEELER GAUGE
2 – STRAIGHT EDGE

Inspect cylinder head camshaft bearings for wear. Check the camshaft journals for scratches and worn areas. If light scratches are present, they may be removed with 400 grit sand paper. If deep scratches are present, replace the camshaft and check the cylinder head for damage. Replace the cylinder head if worn or damaged. Check the lobes for pitting and wear. If the lobes show signs of wear, check the cor-

CLEANING AND INSPECTION (Continued)

responding rocker arm roller for wear or damage. Replace rocker arm/hydraulic lash adjuster if worn or damaged. If lobes show signs of pitting on the nose, flank or base circle; replace the camshaft.

OIL PUMP

CLEANING

Clean all parts thoroughly.

INSPECTION

(1) Inspect the mating surface of the oil pump. Surface should be smooth (Fig. 144). Replace pump cover if scratched or grooved.

(2) Lay a straightedge across the pump cover surface (Fig. 145). If a 0.025 mm (0.001 in.) feeler gauge can be inserted between cover and straight edge, cover should be replaced.

(3) Measure thickness and diameter of outer rotor. If outer rotor thickness measures 9.40 mm (0.370 in.) or less (Fig. 146), or if the diameter is 79.95 mm (3.148 in.) or less, replace outer rotor.

(4) If inner rotor measures 9.40 mm (0.370 in.) or less replace inner rotor (Fig. 147).

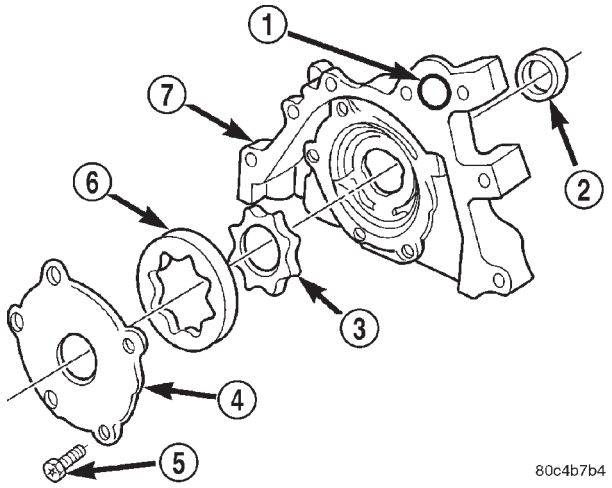

Fig. 144 Oil Pump

1 – O-RING
2 – SEAL
3 – INNER ROTOR
4 – OIL PUMP COVER
5 – FASTENER
6 – OUTER ROTOR
7 – OIL PUMP BODY

(1) Slide outer rotor into pump housing, press to one side with fingers and measure clearance between rotor and housing (Fig. 148). If measurement is 0.39 mm (0.015 in.) or more, replace housing only if outer rotor is in specification.

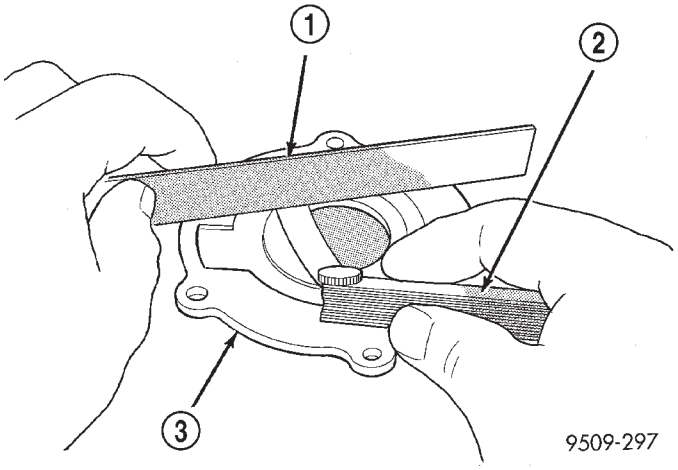

Fig. 145 Checking Oil Pump Cover Flatness

1 – STRAIGHT EDGE
2 – FEELER GAUGE
3 – OIL PUMP COVER

(2) Install inner rotor into pump housing. If clearance between inner and outer rotors (Fig. 149) is 0.203 mm (0.008 in.) or more, replace both rotors.

(3) Place a straightedge across the face of the pump housing, between bolt holes. If a feeler gauge of 0.102 mm (0.004 in.), or more can be inserted between rotors and the straightedge, replace pump assembly (Fig. 150), **ONLY** if rotors are in specifications.

(4) Inspect oil pressure relief valve plunger for scoring and free operation in its bore. Small marks may be removed with 400 grit wet or dry sandpaper.

(5) The relief valve spring has a free length of approximately 60.7 mm (2.39 inches) it should test between 18 and 19 pounds when compressed to 40.5 mm (1.60 inches). Replace spring that fails to meet specifications.

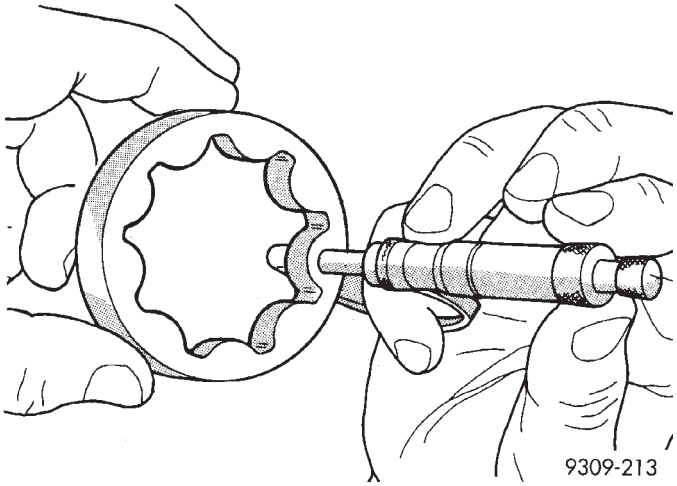

Fig. 146 Measuring Outer Rotor Thickness

CLEANING AND INSPECTION (Continued)

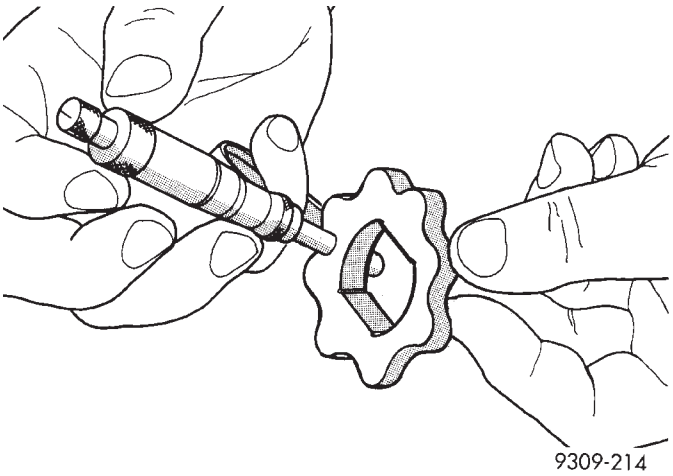

Fig. 147 Measuring Inner Rotor Thickness

(6) If oil pressure is low and pump is within specifications, inspect for worn engine bearings or other reasons for oil pressure loss.

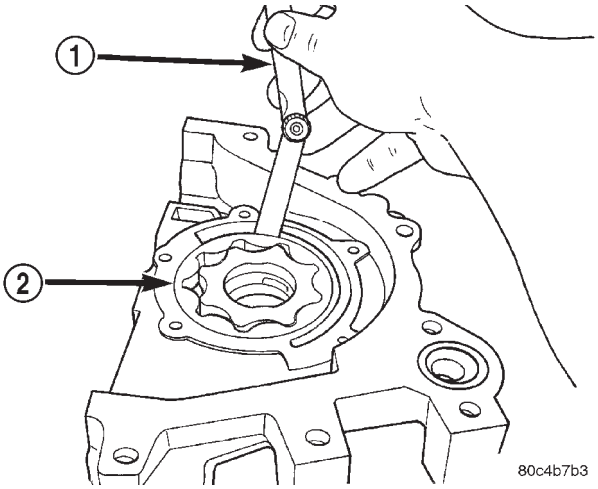

Fig. 148 Measuring Outer Rotor Clearance in Housing

1 – FEELER GAUGE
2 – OUTER ROTOR

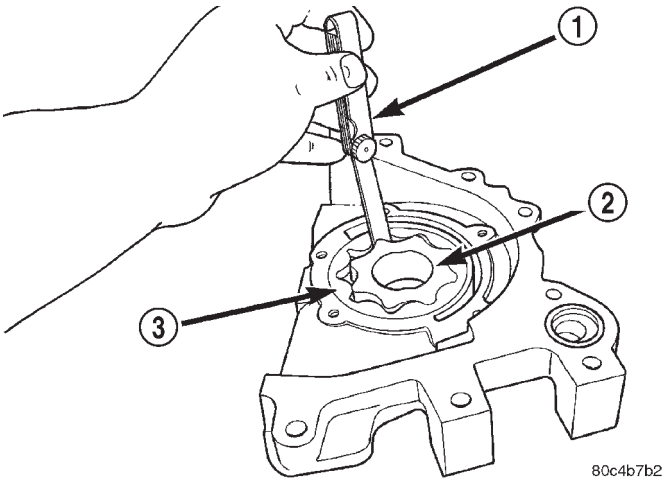

Fig. 149 Measuring Clearance Between Rotors

1 – FEELER GAUGE
2 – INNER ROTOR
3 – OUTER ROTOR

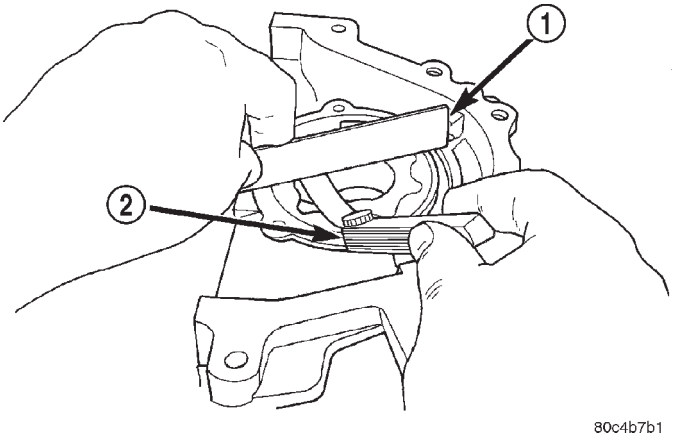

Fig. 150 Measuring Clearance Over Rotors

1 – STRAIGHT EDGE
2 – FEELER GAUGE

CLEANING AND INSPECTION (Continued)

CYLINDER BLOCK

CLEANING

Clean cylinder block thoroughly using a suitable cleaning solvent.

INSPECTION

Inspect all core hole plugs for evidence of leaking. If new core plugs are installed, refer to Engine Core Plugs in this section.

Inspect block and cylinder bores for cracks or fractures.

ADJUSTMENTS

ENGINE TORQUE STRUT ADJUSTMENT

The upper and lower torque struts need to be adjusted together to assure proper engine mount load balance and engine positioning. Whenever a torque strut bolt(s) is loosened the following procedure must be performed.

(1) Remove right side splash shield.

(2) Remove pencil strut (Fig. 152).

(3) Loosen the upper and lower torque strut attaching bolt at the suspension crossmember and shock tower bracket (Fig. 151).

(4) The engine position may now be adjusted by positioning a suitable floor jack on the forward edge of the transmission bell housing (Fig. 153).

NOTE: The floor jack must be positioned as shown in (Fig. 153) to prevent minimal upward lifting of the engine.

(5) Carefully apply upward force, allowing the upper engine to rotate rearward until the distance between the center of the rearmost attaching bolt on the engine mount bracket (point “A”) and the center of the hole on the shock tower bracket (point “B”) is 119 mm (4.70 in.) (Fig. 154).

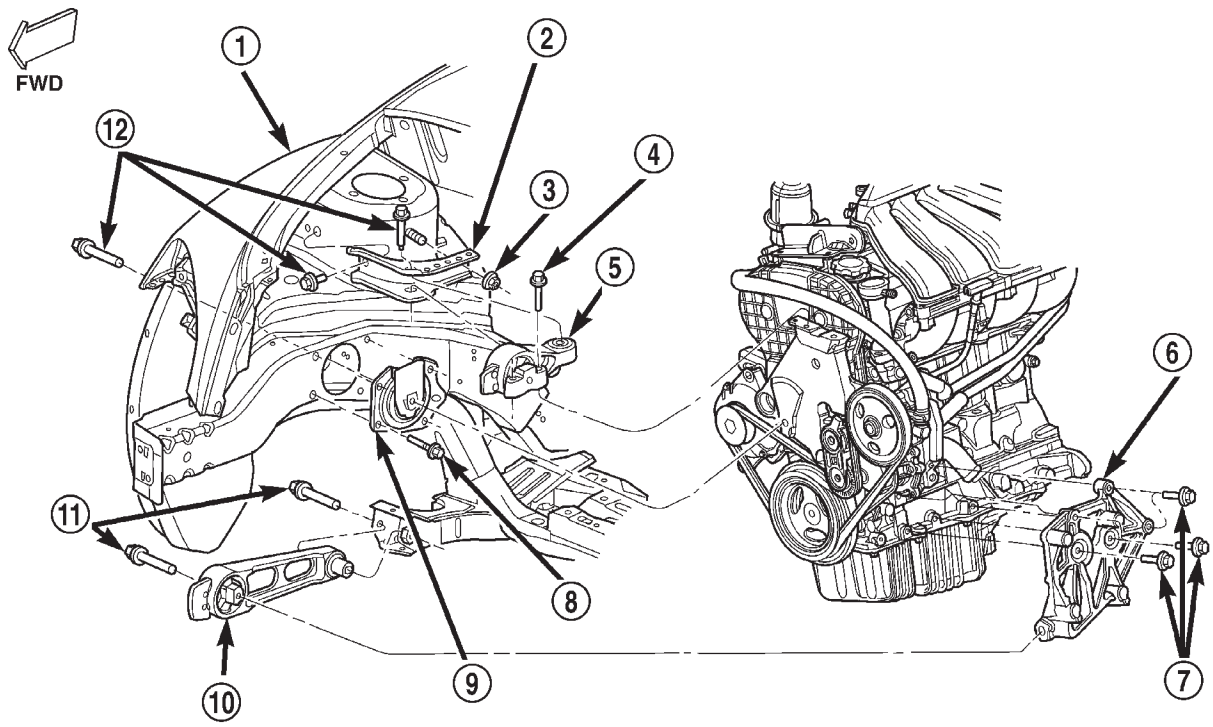

Fig. 151 Torque Strut Bolts

1 – RIGHT FENDER
2 – UPPER TORQUE STRUT BRACKET
3 – NUT
4 – BOLT
5 – UPPER TORQUE STRUT
6 – LOWER TORQUE STRUT BRACKET
7 – BOLTS
8 – BOLTS
9 – RIGHT ENGINE MOUNT
10 – LOWER TORQUE STRUT
11 – BOLTS
12 – BOLTS

ADJUSTMENTS (Continued)

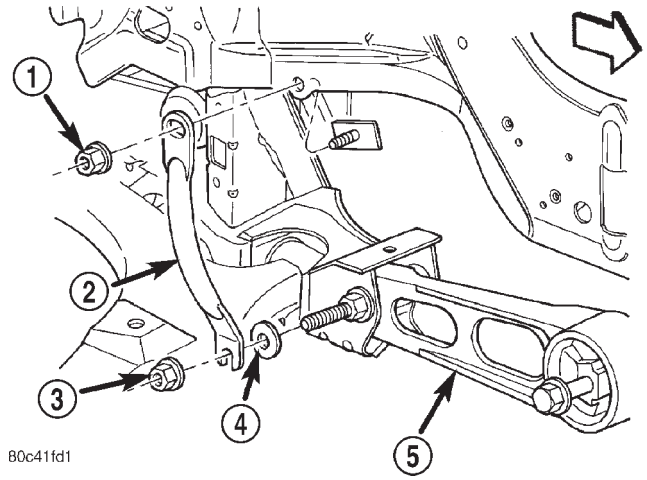

Fig. 152 Pencil Strut

1 – NUT
2 – PENCIL STRUT
3 – NUT
4 – FLAT WASHER
5 – LOWER TORQUE STRUT

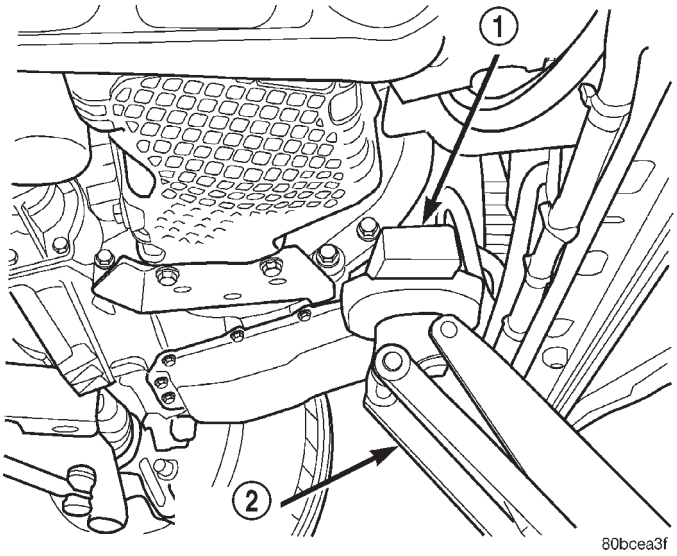

Fig. 153 Floor Jack Positioning

1 – WOOD BLOCK
2 – FLOOR JACK

CAUTION: The engine must be held in position with jack until both the upper and lower torque strut bolts are tightened.

(6) With the engine held at the proper position, tighten both the upper and lower torque strut bolts to 118 N·m (87 ft. lbs.) (Fig. 151).

(7) Remove the floor jack.

(8) Install pencil strut and tighten nuts to 58 N·m (43 ft. lbs.) (Fig. 152).

(9) Install right side splash shield.

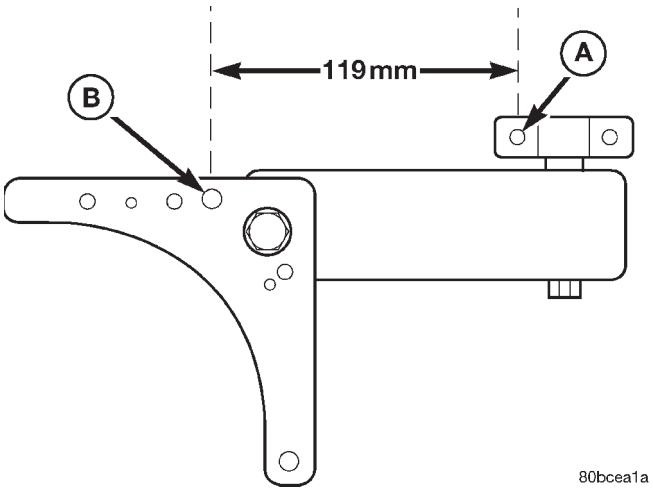

Fig. 154 Engine Position Measurement

SPECIFICATIONS

ENGINE

DESCRIPTION	SPECIFICATION
General Specification	
Type	In-Line OHV, DOHC
Number of Cylinders	4
Displacement	2.0 Liters (122 cu. in.)
Bore	87.5 mm (3.445 in.)
Stroke	83.0 mm (3.268 in.)
Compression Ratio	9.6:1
Firing Order	1-3-4-2
Compression Pressure	1172–1551 kPa (170–225 psi)
Max. Variation Between Cylinders	25%
Cylinder Block	
Cylinder Bore Diameter	87.4924–87.5076 mm (3.4446–3.4452 in.)
Out-of-Round (Max.)	0.051 mm (0.002 in.)
Taper (Max.)	0.051 mm (0.002 in.)
Pistons	
Piston Diameter	87.463–87.481 mm (3.4434–3.4441 in.)

SPECIFICATIONS (Continued)

DESCRIPTION	SPECIFICATION
Clearance @ 17.5 mm (11/16 in.) from bottom of skirt	0.018–0.050 mm (0.0007–0.0020 in.)
Weight	340–350 grams (11.99–12.34 oz.)
Land Clearance (Diametrical)	0.740–0.803 mm (0.029–0.031 in.)
Piston Length	64.8 mm (2.551 in.)
Piston Ring Groove Depth No. 1	3.983–4.132 mm (0.157–0.163 in.)
Piston Ring Groove Depth No. 2	4.456–4.605 mm (0.175–0.181 in.)
Piston Ring Groove Depth No. 3	3.841–4.075 mm (0.151–0.160 in.)
Piston Pins	
Clearance in Piston	0.008–0.020 mm (0.0003–0.0008 in.)
Clearance in Connecting Rod	Interference
Diameter	20.998–21.003 mm (0.8267–0.8269 in.)
End Play	None
Length	74.75–75.25 mm (2.943–2.963 in.)
Piston Rings	
Ring Gap—Top Compression Ring	0.23–0.52 mm (0.009–0.020 in.)
Wear Limit	0.8 mm (0.031 in.)
Ring Gap—2nd Compression Ring	0.49–0.78 mm (0.019–0.031 in.)
Wear Limit	0.8 mm (0.031 in.)
Ring Gap—Oil Control Steel Rails	0.23–0.66 mm (0.009–0.026 in.)
Wear Limit	1.0 mm (0.039 in.)
Ring Side Clearance—Compression Rings	0.025–0.065 mm (0.0010–0.0026 in.)
Wear Limit	0.10 mm (0.004 in.)

DESCRIPTION	SPECIFICATION
Ring Side Clearance—Oil Ring Pack	0.004–0.178 mm (0.0002–0.0070 in.)
Ring Width—Compression Rings	1.17–1.19 mm (0.046–0.047 in.)
Ring Width—Oil Ring Pack	2.854–3.008 mm (0.1124–0.1184 in.)
Connecting Rod	
Bearing Clearance	0.026–0.059 mm (0.001–0.0023 in.)
Wear Limit	0.075 mm (0.003 in.)
Bore Diameter—Piston Pin	20.96–20.98 mm (0.8252–0.8260 in.)
Bore Diameter—Crankshaft End	50.991–51.005 mm (2.0075–2.0081 in.)
Side Clearance	0.13–0.38 mm (0.005–0.015 in.)
Wear Limit	0.40 mm (0.016 in.)
Weight—Total (Less Bearing)	543 grams (19.15 oz.)
Crankshaft	
Connecting Rod Journal Diameter	47.9924–48.0076 mm (1.8894–1.8900 in.)
Main Bearing Journal Diameter	51.9924–52.0076 mm (2.0469–2.0475 in.)
Journal Out-of-Round (Max.)	0.0035 mm (0.0001 in.)
Journal Taper (Max.)	0.0038 mm (0.0001 in.)
End Play	0.09–0.24 mm (0.0035–0.0094 in.)
Wear Limit	0.37 mm (0.015 in.)
Main Bearing Diametrical Clearance	0.022–0.062 mm (0.0008–0.0024 in.)
Hydraulic Lash Adjuster	
Body Diameter	15.901–15.913 mm (0.626–0.6264 in.)
Plunger Travel Minimum (Dry)	3.0 mm (0.118 in.)

SPECIFICATIONS (Continued)

DESCRIPTION	SPECIFICATION
Cylinder Head Camshaft Bearing Bore Diameter	
Journals No.1–6	26.020–26.041 mm (1.024–1.025 in.)
Camshaft	
Journal Diameter No. 1–6	25.951–25.970 mm (1.021–1.022 in.)
Bearing Clearance—Diametrical	0.069–0.071 mm (0.0027–0.003 in.)
End Play	0.05–0.15 mm (0.002–0.006 in.)
Lift (Zero Lash)	
Intake	8.65 mm (0.340 in.)
Exhaust	7.95 mm (0.312 in.)
Intake Valve Timing*	
Closes (ABDC)	33.6°
Opens (BTDC)	3.8°
Duration	212.8°
Exhaust Valve Timing*	
Closes (BTDC)	1°
Opens (BBDC)	41.8°
Duration	220.8°
Valve Overlap	0°
*All readings in crankshaft degrees, at 0.5 mm (0.019 in.) of valve lift.	
Cylinder Head	
Material	Cast Aluminum
Gasket Thickness (Compressed)	1.15 mm (0.045 in.)
Valve Seat	
Angle	44.5°- 45°
Seat Diameter—Intake	34.37 - 34.63mm (1.353 - 1.363in.)
Seat Diameter—Exhaust	27.06 - 27.32mm (1.065 - 1.075in.)
Runout (Max.)	0.05 mm (0.002 in.)
Valve Seat Width—Intake and Exhaust	0.9–1.3 mm (0.035–0.051 in.)

DESCRIPTION	SPECIFICATION
Service Limit—Intake	2.0 mm (0.079 in.)
Service Limit—Exhaust	2.5 mm (0.098 in.)
Valve Guide	
Diameter I.D.	5.975–6.000 mm (0.235–0.236 in.)
Guide Bore Diameter	11.0–11.02 mm (0.4330–0.4338 in.)
Guide Height (spring seat to guide tip)	13.25–13.75 mm (0.521–0.541 in.)
Valves	
Face Angle—Intake and Exhaust	44.5—45°
Head Diameter—Intake	34.67–34.93 mm 1.364–1.375 in.)
Head Diameter—Exhaust	28.32–28.52 mm (1.114–1.122 in.)
Valve Length (Overall)	
—Intake	112.76–113.32 mm (4.439–4.461 in.)
—Exhaust	110.89–111.69 mm (4.365–4.397 in.)
Valve Stem Diameter	
—Intake	5.934–5.952 mm (0.2337–0.2344 in.)
—Exhaust	5.906–5.924 mm (0.2326–0.2333 in.)
Valve Margin	
Intake	1.200–1.700 mm (0.047–0.066
Service Limit	0.95 mm (1/32 in.)
Exhaust	0.985–1.315 mm (0.038–0.051 in.)
Service Limit	1.05 mm (3/64 in.)
Valve Stem Tip Height	
Intake	48.04 mm (1.891 in.)

SPECIFICATIONS (Continued)

DESCRIPTION	SPECIFICATION
Exhaust	47.99 mm (1.889 in.)
Valve Stem to Guide Clearance	
Intake	0.048–0.066 mm (0.0018–0.0025 in.)
Max. Allowable	0.076 mm (0.003 in.)
Service Limit	0.25 mm (0.010 in.)
Exhaust	0.0736–0.094 mm (0.0029–0.0037 in.)
Max. Allowable	0.101 mm (0.004 in.)
Service Limit	0.25 mm (0.010 in.)
Valve Springs	
Free Length (Approx.)	49.3 mm (1.940 in.)
Nominal Force (Valve Closed)	245–328 N @ 38.0 mm (66–74 lbs. @ 1.496 in.)
Nominal Force (Valve Open)	565–627 N @ 29.3 mm (127–141 lbs. @ 1.53 in.)
Installed Height	36.93 - 38.93mm (1.453 - 1.532in.)
Number of Coils	7.80
Wire Diameter	3.61 mm (0.142 in.)
Oil Pump	
Clearance Over Rotors (Max.)	0.10 mm (0.004 in.)
Cover Out-of-Flat (Max.)	0.076 mm (0.003 in.)
Inner Rotor Thickness (Min.)	7.64 mm (0.301 in.)
Outer Rotor Thickness (Min.)	7.64 mm (0.301 in.)
Outer Rotor Clearance (Max.)	0.039 mm (0.015 in.)

DESCRIPTION	SPECIFICATION
Outer Rotor Diameter (Min.)	79.95 mm (3.148 in.)
Tip Clearance Between Rotors (Max.)	0.20 mm (0.008 in.)
Oil Pressure	
At Curb Idle Speed*	25 kPa (4 psi)
At 3000 rpm	170–550 kPa (25–80 psi)
*If pressure is ZERO at curb idle, DO NOT run engine at 3000 rpm.	

TORQUE

DESCRIPTION	N·m	Ft. Lbs.	In. Lbs.
Camshaft Sprocket—Bolt	115	85	—
Connecting Rod Cap—Bolts	27 +¼ turn	20 +¼ turn	—
Crankshaft Main Bearing Cap/Bedplate			
—M8 Bolts	30	22	—
—M11 Bolts	81	60	—
Crankshaft Damper	142	105	—
Cylinder Head—Bolts	Refer to Procedure		
Cylinder Head Cover—Bolts	12	—	105
Drive Plate to Crankshaft	95	70	—
Engine Mount Bracket Right—Bolts	61	45	—
Engine Mount Front and Rear—Through Bolt	61	45	—
Exhaust Manifold to Cylinder Head—Bolts	23	—	200
Exhaust Manifold Heat Shield—Bolts	12	—	105
Intake Manifold—Bolts	28	—	250
Oil Filter	20	15	—
Oil Filter Adaptor	80	60	—
Oil Pan—Bolts	12	—	105
Oil Pan Drain—Plug	34	25	—
Oil Pump to Block—Bolts	28	20	—

SPECIFICATIONS (Continued)

DESCRIPTION	N·m	Ft. Lbs.	In. Lbs.
Oil Pump Cover Plate—Bolts	12	—	105
Oil Pump Pick-up Tube—Bolt	28	20	—
Oil Pump Relief Valve—Cap	55	40	—
PCV Valve	8	—	70
Spark Plugs	28	20	—
Timing Belt Covers			
—Outer Cover to Inner Cover Bolts	4.5	—	40
—Inner Cover Bolts	12	—	105
Timing Belt Tensioner Assembly—Bolts	28	20	—

SPECIAL TOOLS

ENGINE

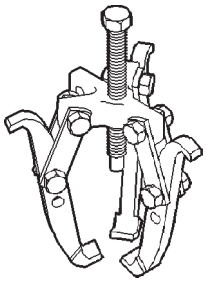

Puller 1026

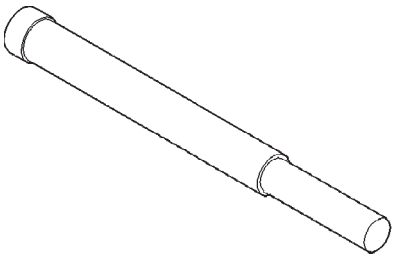

Crankshaft Damper Removal Insert 6827-A

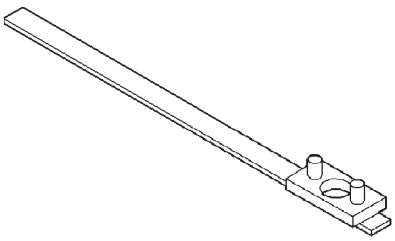

Camshaft Sprocket Remover/Installer C-4687

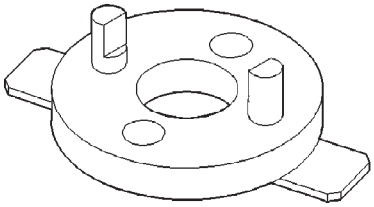

Camshaft Sprocket Remover/Installer Adapter C-4687-1

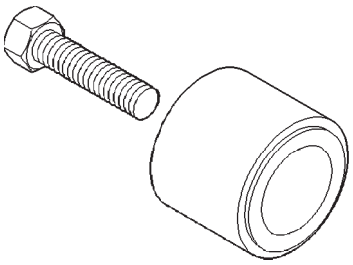

Camshaft Seal Installer MD-998713

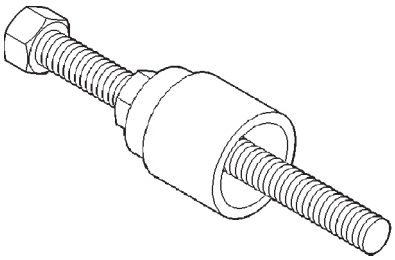

Installer Crankshaft Damper 6792

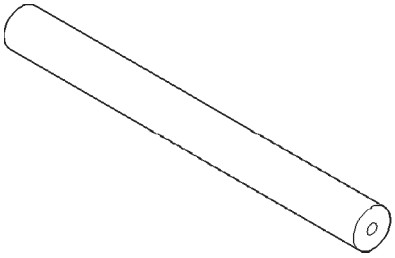

Crankshaft Sprocket Remover Insert C-4685-C2

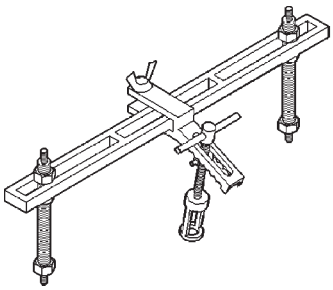

Valve Spring Compressor MD-998772-A

SPECIAL TOOLS (Continued)

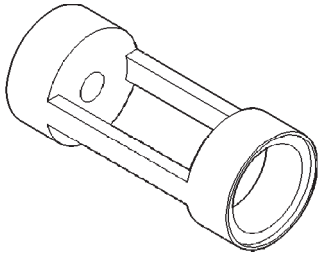

Adapter Spring Compressor 6779

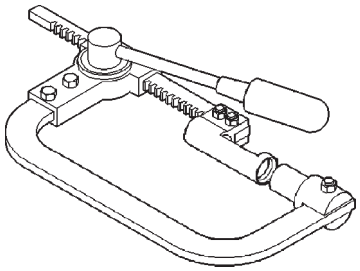

Valve Spring Compressor C-3422-B

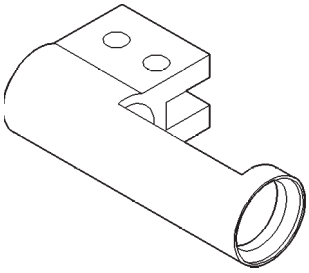

Spring Compressor Adaptor 6526

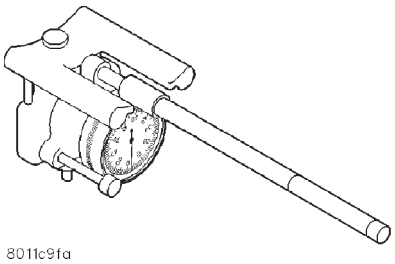

Cylinder Bore Indicator C-119

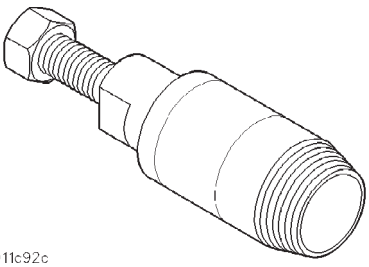

Front Crankshaft Seal Remover 6771

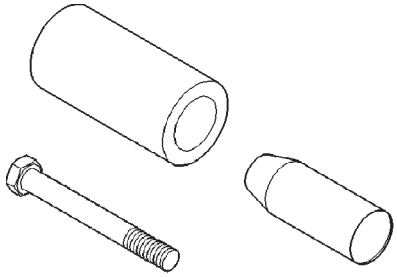

Front Crankshaft Seal Installer 6780

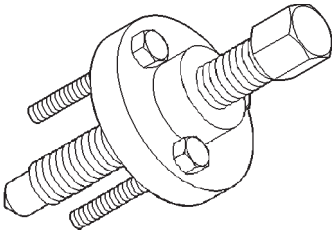

Crankshaft Sprocket Remover 6793

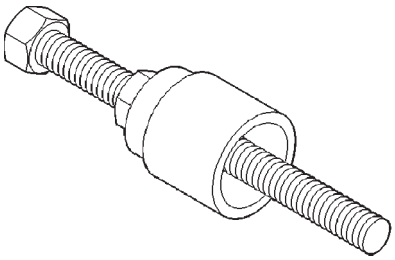

Crankshaft Sprocket Installer 6792

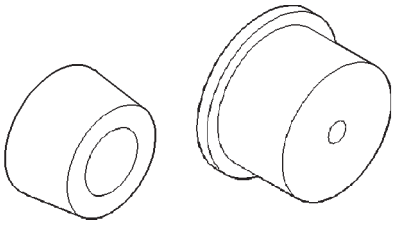

Rear Crankshaft Seal Guide and Installer 6926-1 and 6926-2

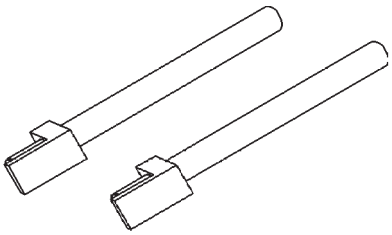

Connecting Rod Guides 8189

SPECIAL TOOLS (Continued)

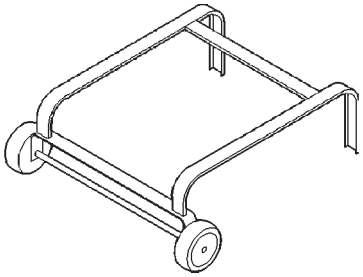

Dolly 6135

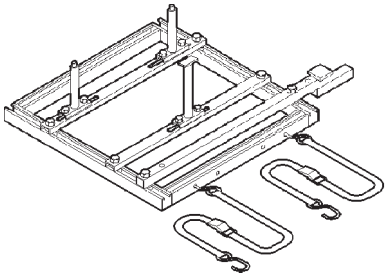

Cradle 6710

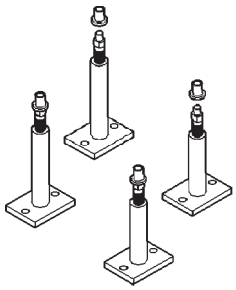

Post Kit—Engine Cradle 6848

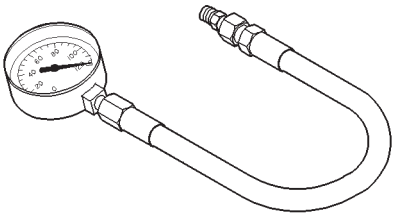

Pressure Gauge C-3292

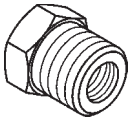

Adaptor 8406

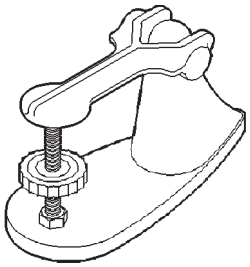

Valve Spring Tester C-647

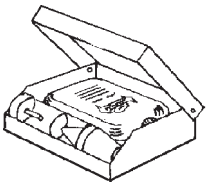

Combustion Leak Tester C-3685-A

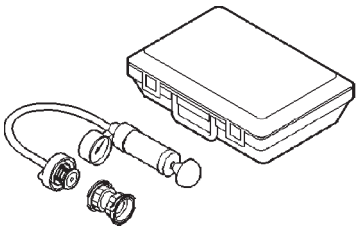

Cooling System Tester 7700

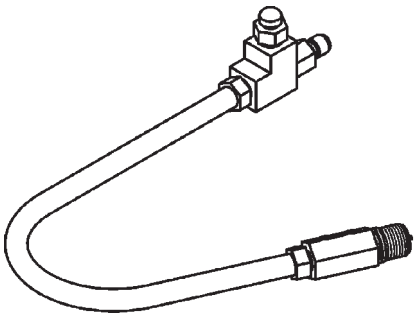

Cylinder Compression Pressure Adaptor 8116

2001 PT CRUISER

EXHAUST SYSTEM

TABLE OF CONTENTS

	page
DESCRIPTION AND OPERATION	
EXHAUST SYSTEM	1
CATALYTIC CONVERTER	1
HEAT SHIELDS	2
DIAGNOSIS AND TESTING	
EXHAUST SYSTEM DIAGNOSIS	4
EXHAUST SYSTEM RESTRICTION CHECK	4
REMOVAL AND INSTALLATION	
MUFFLER	4
INTERMEDIATE PIPE	6
CATALYTIC CONVERTER	6
ISOLATOR AND SUPPORT BRACKET	8
HEAT SHIELDS	8
CLEANING AND INSPECTION	
EXHAUST SYSTEM	10
CATALYTIC CONVERTER	10
ADJUSTMENTS	
EXHAUST SYSTEM ALIGNMENT	10
SPECIFICATIONS	
EXHAUST SYSTEM CLEARANCE	10
TORQUE	12
SPECIAL TOOLS	
EXHAUST SYSTEM	12

DESCRIPTION AND OPERATION

EXHAUST SYSTEM

DESCRIPTION

The exhaust system components consist of a catalytic converter, intermediate pipe, muffler, clamps and support isolators (Fig. 1).

CATALYTIC CONVERTER

DESCRIPTION

An under-floor catalytic converter inlet is attached to the exhaust manifold using fasteners and a gasket for sealing (Fig. 2). A flex joint that is integral to the converter allows movement between the engine and the exhaust system. The converter outlet attaches to the intermediate pipe.

OPERATION

The three-way catalytic converter simultaneously converts three exhaust emissions into harmless gases. Specifically, HC and CO emissions are converted into water (H2O) and carbon dioxide (CO2). Oxides of Nitrogen (NOx) are converted into elemental Nitrogen (N) and water. The three-way catalyst is most efficient in converting HC, CO and NOx at the stoichiometric air fuel ratio of 14.7:1.

The oxygen content in a catalyst is important for efficient conversion of exhaust gases. When a high oxygen content (lean) air/fuel ratio is present for an extended period, oxygen content in a catalyst can reach a maximum. When a rich air/fuel ratio is present for an extended period, the oxygen content in the catalyst can become totally depleted. When this occurs, the catalyst fails to convert the gases. This is known as catalyst “punch through.”

Catalyst operation is dependent on its ability to store and release the oxygen needed to complete the emissions-reducing chemical reactions. As a catalyst deteriorates, its ability to store oxygen is reduced. Since the catalyst’s ability to store oxygen is somewhat related to proper operation, oxygen storage can be used as an indicator of catalyst performance. Refer to the appropriate Powertrain Diagnostic Procedure for diagnosis of a catalyst related Diagnostic Trouble Code (DTC).

The combustion reaction caused by the catalyst releases additional heat in the exhaust system, causing temperature increases in the area of the reactor under severe operating conditions. Such conditions can exist when the engine misfires or otherwise does not operate at peak efficiency. **Do not** remove spark plug wires from plugs or by any other means short out cylinders, if exhaust system is equipped with a catalytic converter. Failure of the catalytic converter can occur due to temperature increases caused by unburned fuel passing through the converter. This deterioration of the catalyst core can result in excessively high emission levels, noise complaints, and exhaust restrictions.

The use of catalysts also involves some non-automotive problems. Unleaded gasoline must be used to avoid poisoning the catalyst core. Do not allow engine to operate above 1200 RPM in neutral for extended periods over 5 minutes. This condition may result in

DESCRIPTION AND OPERATION (Continued)

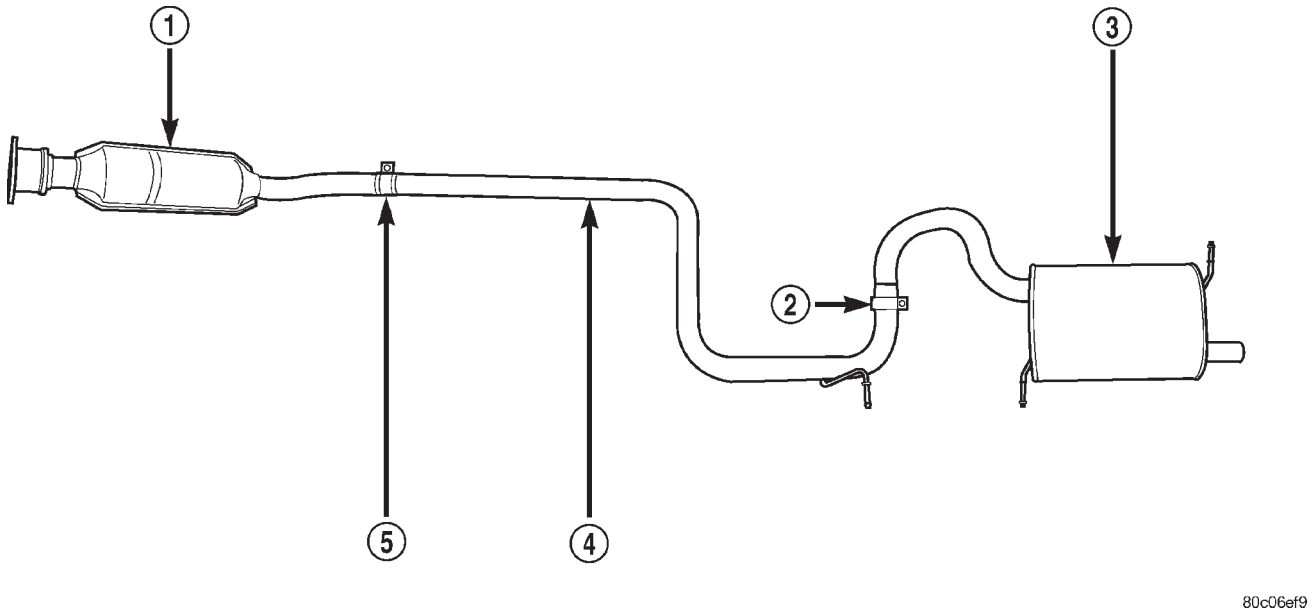

Fig. 1 Exhaust System

1 – CATALYTIC CONVERTER
2 – BAND CLAMP
3 – MUFFLER
4 – INTERMEDIATE PIPE
5 – BAND CLAMP

excessive exhaust system/floor pan temperatures because of no air movement under the vehicle.

There is no regularly scheduled maintenance on any DaimlerChrysler catalytic converter. If damaged, the converter must be replaced.

CAUTION: Due to exterior physical similarities of some catalytic converters with pipe assemblies, extreme care should be taken with replacement parts.

HEAT SHIELDS

DESCRIPTION

Heat shields (Fig. 3), (Fig. 4), (Fig. 5), and (Fig. 6) are needed to protect both the vehicle and the environment from the high temperatures developed in the vicinity of the catalytic converter.

CAUTION: Avoid application of rust prevention compounds or undercoating materials to exhaust system floor pan heat shield on cars if equipped. Light over-spray near the edges is permitted. Application of coating will greatly reduce the efficiency of the heat shields resulting in excessive floor pan temperatures and objectionable fumes.

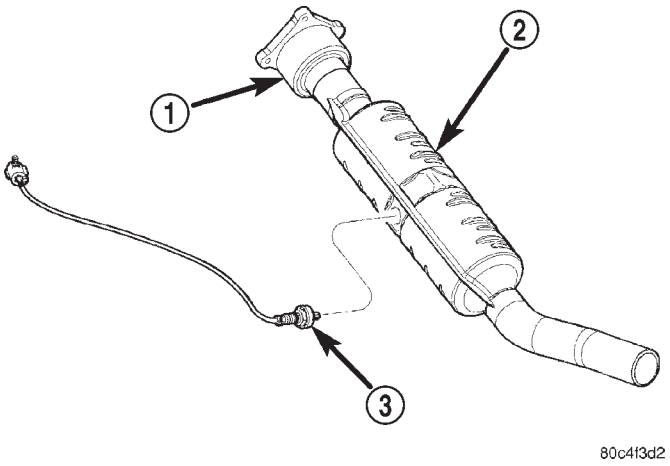

Fig. 2 Catalytic Converter

1 – FLEX JOINT
2 – CATALYTIC CONVERTER
3 – OXYGEN SENSOR

DESCRIPTION AND OPERATION (Continued)

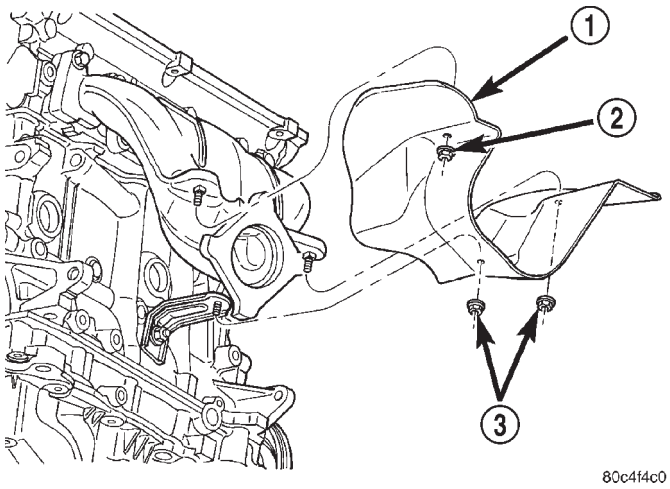

Fig. 3 Heat Shield—Engine Wiring

1 – HEAT SHIELD
2 – NUT
3 – NUT

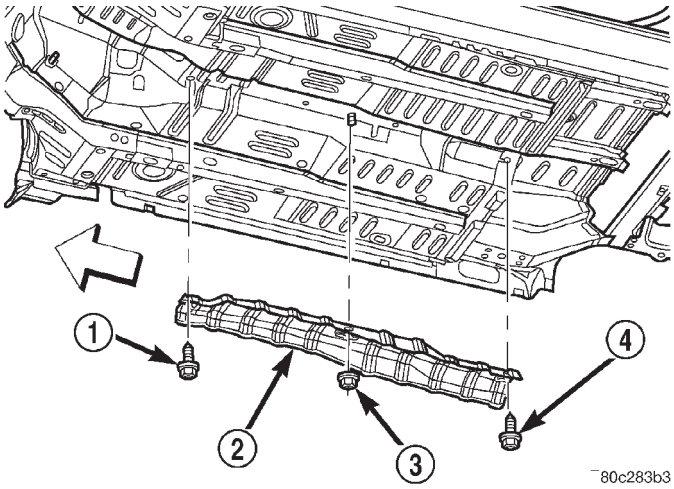

Fig. 5 Heat Shield—Intermediate Pipe

1 – SCREW
2 – HEAT SHIELD
3 – NUT
4 – SCREW

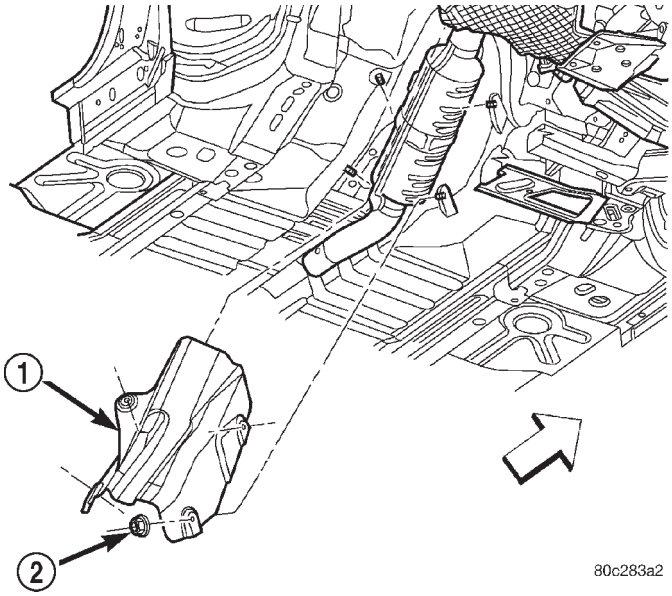

Fig. 4 Heat Shield—Catalytic Converter

1 – HEAT SHIELD
2 – NUT

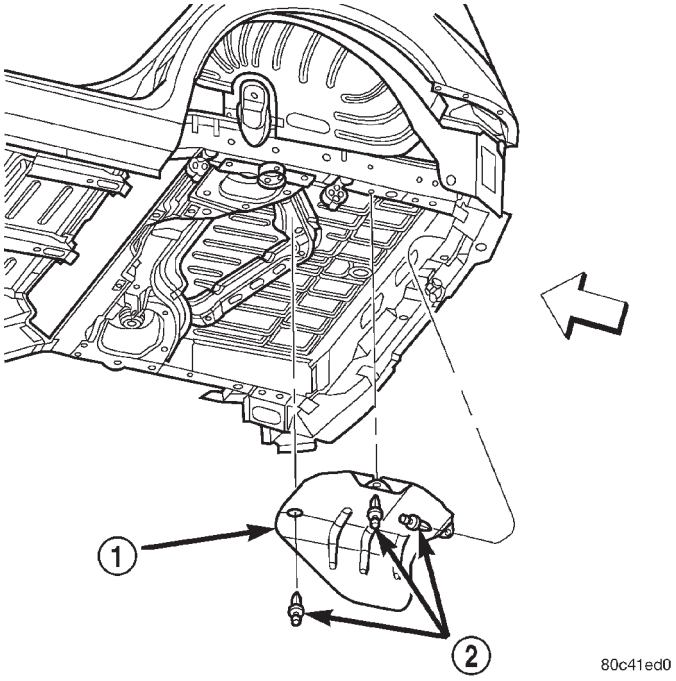

Fig. 6 Heat Shield—Muffler

1 – HEAT SHIELD
2 – FASTENER

DIAGNOSIS AND TESTING

EXHAUST SYSTEM DIAGNOSIS

CONDITION	POSSIBLE CAUSES	CORRECTION
EXCESSIVE EXHAUST NOISE (UNDER HOOD)	1. Exhaust manifold cracked or broken.	1. Replace manifold.
	2. Manifold to cylinder head leak.	2. Tighten manifold and/or replace gasket.
	3. Exhaust flex joint to manifold leak.	3.Tighten fasteners or replace gasket.
	4. Exhaust flex joint.	4. Replace catalytic converter assembly.
	5. Pipe and shell noise from front exhaust pipe.	5. Characteristic of single wall pipes.
EXCESSIVE EXHAUST NOISE	1. Leaks at pipe joints.	1. Tighten or replace clamps at leaking joints.
	2. Burned, blown, or rusted out exhaust pipe or muffler.	2. Replace muffler or exhaust pipes.
	3. Restriction in muffler or tailpipe.	3. Remove restriction, if possible or replace as necessary.
	4. Catalytic converter material in muffler.	4. Replace muffler and converter assembly. Check fuel injection and ignition systems for proper operation.

EXHAUST SYSTEM RESTRICTION CHECK

Exhaust system restriction can be checked by measuring back pressure using the DRB III® and PEP module pressure tester.

WARNING: THE NORMAL OPERATING TEMPERATURE OF THE EXHAUST SYSTEM IS VERY HIGH. THEREFORE, NEVER WORK AROUND OR ATTEMPT TO SERVICE ANY PART OF THE EXHAUST SYSTEM UNTIL IT IS COOLED. SPECIAL CARE SHOULD BE TAKEN WHEN WORKING NEAR THE CATALYTIC CONVERTER. THE TEMPERATURE OF THE CONVERTER RISES TO A HIGH LEVEL AFTER A SHORT PERIOD OF ENGINE OPERATION TIME.

(1) Disconnect and remove the upstream (before catalytic converter) oxygen sensor. Refer to FUEL for procedure.

(2) Install the Exhaust Back Pressure Fitting Adaptor CH8519.

(3) Connect the Low Pressure Sensor (15 psi) CH7063 to the back pressure fitting.

(4) Following the PEP module instruction manual, connect all required cables to the DRB III® and PEP module. Select the available menu options on the DRBIII® display screen for using the digital pressure gauge function.

(5) Start engine and monitor pressure readings.

(6) Raise engine speed to 2000 RPM. Back pressure should not exceed specified limit. Refer to specification in table below.

(7) If pressure exceeds maximum limits, inspect exhaust system for restricted component. Replace as necessary.

Exhaust Back Pressure Limit (Max)	
Vehicle in Park/Neutral (no load) RPM	3.45 Kpa (0.5 psi)

REMOVAL AND INSTALLATION

MUFFLER

REMOVAL

WARNING: THE NORMAL OPERATING TEMPERATURE OF THE EXHAUST SYSTEM IS VERY HIGH. THEREFORE, NEVER WORK AROUND OR ATTEMPT TO SERVICE ANY PART OF THE EXHAUST SYSTEM UNTIL IT IS COOLED. SPECIAL CARE SHOULD BE TAKEN WHEN WORKING NEAR THE CATALYTIC CONVERTER. THE TEMPERATURE OF THE CONVERTER RISES TO A HIGH LEVEL AFTER A SHORT PERIOD OF ENGINE OPERATING TIME.

REMOVAL AND INSTALLATION (Continued)

(1) Raise vehicle on hoist and apply penetrating oil to band clamp fastener of component being removed.

NOTE: Do not use petroleum-based lubricants when removing/installing muffler or exhaust pipe isolators as it may compromise the life of the part. A suitable substitute is a mixture of liquid dish soap and water.

(2) Remove exhaust system ground strap at rear of muffler.

(3) Loosen band clamp and remove support isolators at muffler. Remove muffler from intermediate pipe (Fig. 7).

(4) Clean ends of pipes and muffler to assure mating of all parts. Discard broken or worn isolators, rusted or overused clamps, supports, and attaching parts.

NOTE: When replacement is required on any component of the exhaust system, you must use original equipment parts (or their equivalent).

INSTALLATION

When assembling exhaust system **do not** tighten clamps until components are aligned and clearances are checked.

(1) Install the muffler to intermediate pipe and the isolator supports to the underbody.

(2) Working from the front of system; align each component to maintain position and proper clearance with underbody parts. Refer to Specifications - Exhaust System Clearance (Fig. 18) in this section. Tighten band clamp to 47 N·m (35 ft. lbs.) (Fig. 8).

CAUTION: Band clamps should never be tightened such that the two sides of the clamps are bottomed out against the center hourglass shaped center block. Once this occurs, the clamp band has been stretched and has lost its clamping force and must be replaced.

To replace the band clamp; remove the nut and peel back the ends of the clamp until spot weld breaks.

NOTE: Maintain proper clamp orientation when replacing with new clamp.

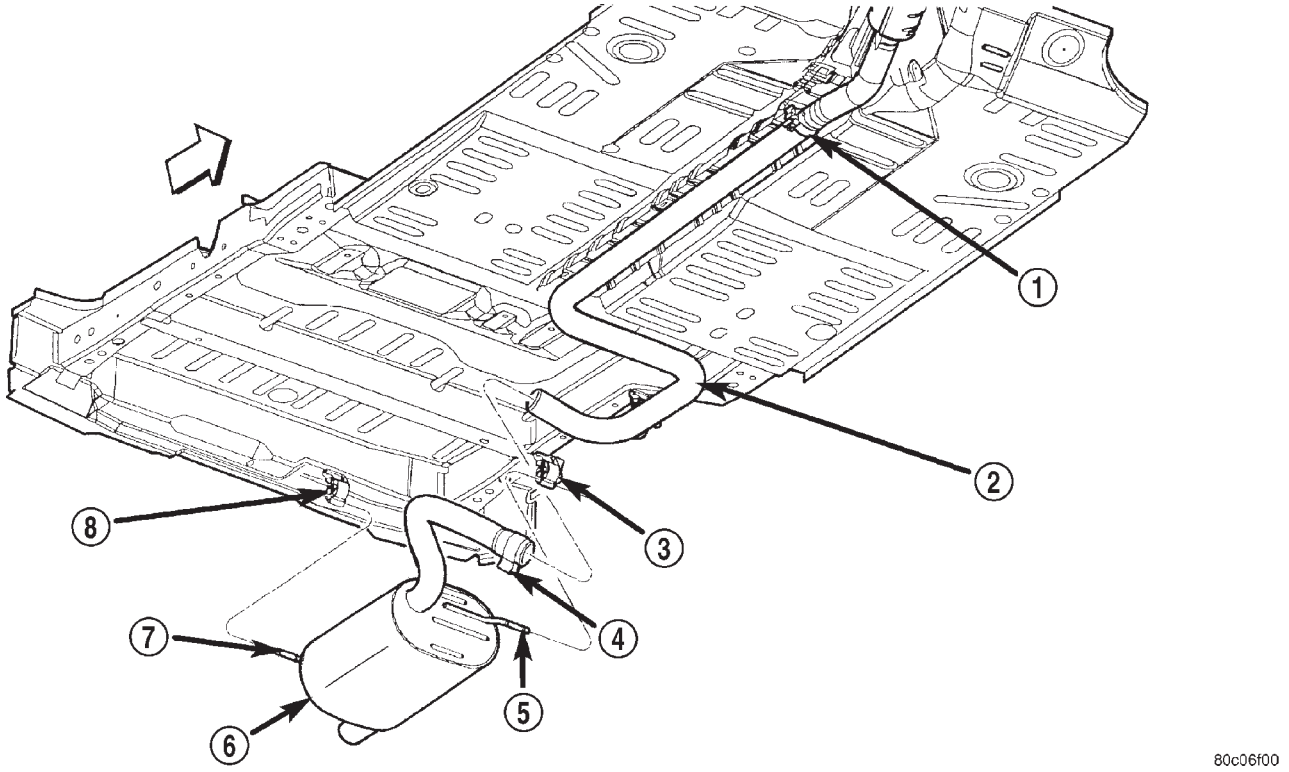

Fig. 7 Muffler

1 – CLAMP
2 – INTERMEDIATE PIPE
3 – ISOLATOR
4 – CLAMP
5 – HANGER
6 – MUFFLER
7 – HANGER
8 – ISOLATOR

REMOVAL AND INSTALLATION (Continued)

(3) Connect the exhaust system ground strap.

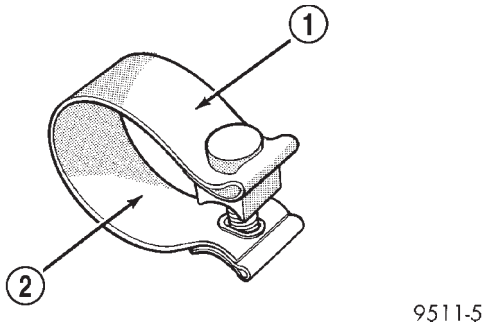

Fig. 8 Band Clamp

1 – CLAMP SIZE
2 – TORQUE SPECIFICATION

INTERMEDIATE PIPE

REMOVAL

WARNING: THE NORMAL OPERATING TEMPERATURE OF THE EXHAUST SYSTEM IS VERY HIGH. THEREFORE, NEVER WORK AROUND OR ATTEMPT TO SERVICE ANY PART OF THE EXHAUST SYSTEM UNTIL IT IS COOLED. SPECIAL CARE SHOULD BE TAKEN WHEN WORKING NEAR THE CATALYTIC CONVERTER. THE TEMPERATURE OF THE CONVERTER RISES TO A HIGH LEVEL AFTER A SHORT PERIOD OF ENGINE OPERATING TIME.

(1) Raise vehicle on hoist and apply penetrating oil to band clamp fastener of component being removed.

NOTE: Do not use petroleum-based lubricants when removing/installing muffler or exhaust pipe isolators as it may compromise the life of the part. A suitable substitute is a mixture of liquid dish soap and water.

(2) Remove muffler. Refer to procedure in this section.

(3) Loosen band clamp and remove support isolator. Remove intermediate pipe from catalytic converter pipe (Fig. 9).

(4) Clean ends of pipes and muffler to assure mating of all parts. Discard broken or worn isolators, rusted or overused clamps, supports, and attaching parts.

NOTE: When replacement is required on any component of the exhaust system, you must use original equipment parts (or their equivalent).

INSTALLATION

When assembling exhaust system **do not** tighten clamps until components are aligned and clearances are checked.

(1) Install intermediate pipe and the isolator supports to the underbody (Fig. 9).

(2) Install muffler. Refer to procedure in this section.

(3) Working from the front of system; align each component to maintain position and proper clearance with underbody parts. Refer to Specifications - Exhaust System Clearance (Fig. 18) in this section.

(4) Tighten band clamps to 47 N·m (35 ft. lbs.) (Fig. 10).

CAUTION: Band clamps should never be tightened such that the two sides of the clamps are bottomed out against the center hourglass shaped center block. Once this occurs, the clamp band has been stretched and has lost its clamping force and must be replaced.

To replace the band clamp; remove the nut and peel back the ends of the clamp until spot weld breaks.

NOTE: Maintain proper clamp orientation when replacing with new clamp.

CATALYTIC CONVERTER

REMOVAL

WARNING: THE NORMAL OPERATING TEMPERATURE OF THE EXHAUST SYSTEM IS VERY HIGH. THEREFORE, NEVER ATTEMPT TO SERVICE ANY PART OF THE EXHAUST SYSTEM UNTIL IT IS COOLED. SPECIAL CARE SHOULD BE TAKEN WHEN WORKING NEAR THE CATALYTIC CONVERTER. THE TEMPERATURE OF THE CONVERTER RISES TO A HIGH LEVEL AFTER A SHORT PERIOD OF ENGINE OPERATION TIME.

NOTE: Before replacing a catalytic converter, determine the root cause of failure. Most catalytic converter failures are caused by air, fuel or ignition problems. Refer to the appropriate service diagnostic information for repair procedures.

(1) Remove muffler and intermediate pipe. Refer to procedures in this section.

(2) Disconnect downstream oxygen sensor electrical connector (Fig. 11).

REMOVAL AND INSTALLATION (Continued)

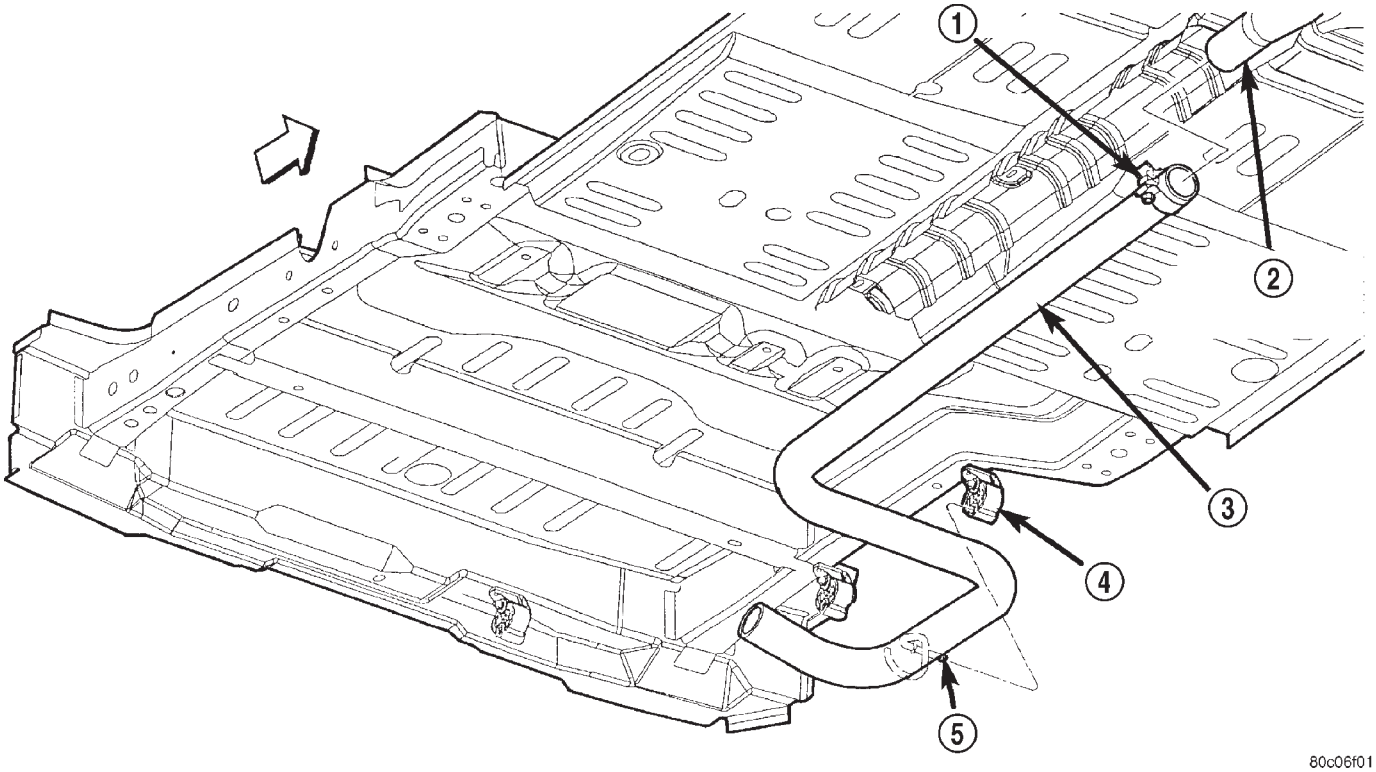

Fig. 9 Intermediate Pipe

1 – CLAMP
2 – CATALYTIC CONVERTER PIPE
3 – INTERMEDIATE PIPE
4 – ISOLATOR
5 – HANGER

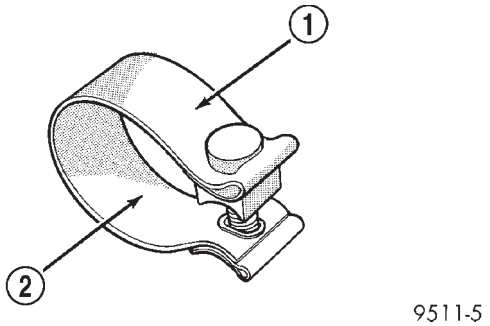

Fig. 10 Band Clamp

1 – CLAMP SIZE
2 – TORQUE SPECIFICATION

(3) Remove catalytic converter to exhaust manifold attaching fasteners and remove converter from vehicle (Fig. 12).

(4) Remove and discard flange gasket.

NOTE: When replacement is required on any component of the exhaust system, original equipment parts (or equivalent) must be used.

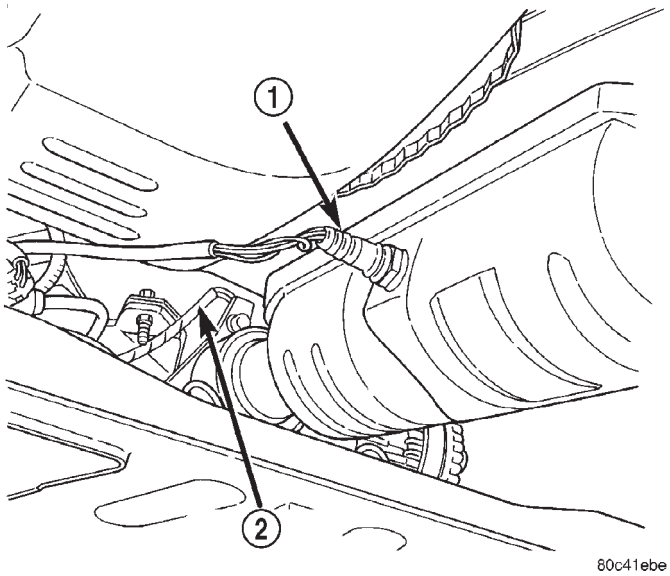

Fig. 11 Downstream 1/2 Oxygen Sensor

1 – DOWN STREAM O2 SENSOR
2 – UP STREAM O2 SENSOR

REMOVAL AND INSTALLATION (Continued)

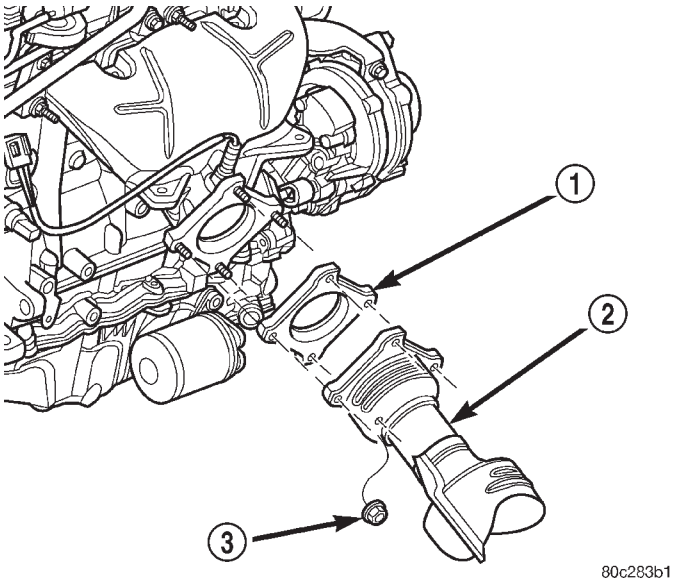

Fig. 12 Catalytic Converter to Exhaust Manifold Connection

1 – GASKET
2 – CATALYTIC CONVERTER
3 – NUT

INSTALLATION

NOTE: When assembling exhaust system do not tighten clamps until all components are aligned and clearances are checked.

(1) Assemble catalytic converter to exhaust manifold connection. Use a new flange gasket.

(2) Tighten the catalytic converter to exhaust manifold fasteners to 28 N·m (250 in. lbs.) (Fig. 12).

(3) Install intermediate pipe and muffler. Working from the front of the system—align each component to maintain position and proper clearance with under body components. Tighten all band clamps to 47 N·m (35 ft. lbs.).

CAUTION: Band clamps should never be tightened such that the two sides of the clamps are bottomed out against the center hourglass shaped center block. Once this occurs, the clamp has lost clamping force and must be replaced.

(4) If removed, install downstream oxygen sensor (Fig. 11).

(5) Connect downstream oxygen sensor electrical connector.

ISOLATOR AND SUPPORT BRACKET

REMOVAL

(1) Disconnect isolator from exhaust system component.

(2) Remove screws attaching isolator bracket to underbody (Fig. 13).

(3) Remove isolator assembly (Fig. 13).

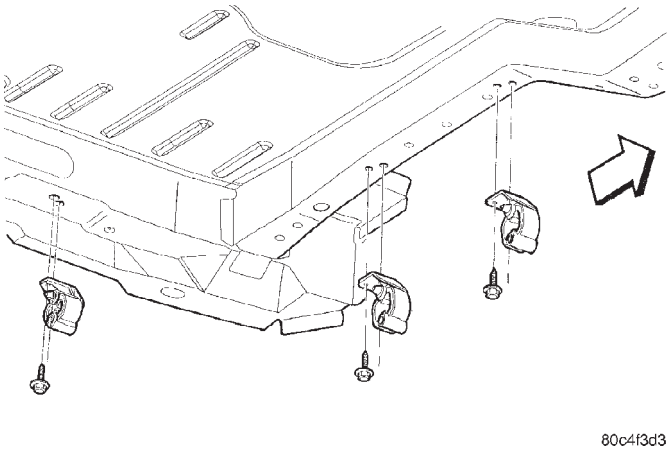

Fig. 13 Exhaust System Isolator and Bracket

INSTALLATION

(1) Position isolator bracket to underbody and install attaching screws (Fig. 13). Tighten bracket screws to frame rail to 8.5 N·m (75 in. lbs.) and bracket screws to the rear panel to 3.7 N·m (33 in. lbs.).

(2) Connect isolator to exhaust system component.

HEAT SHIELDS

REMOVAL

(1) Raise vehicle on hoist.

(2) Remove fasteners attaching heat shield (Fig. 14), (Fig. 15), (Fig. 16), or (Fig. 17).

(3) Remove heat shield(s).

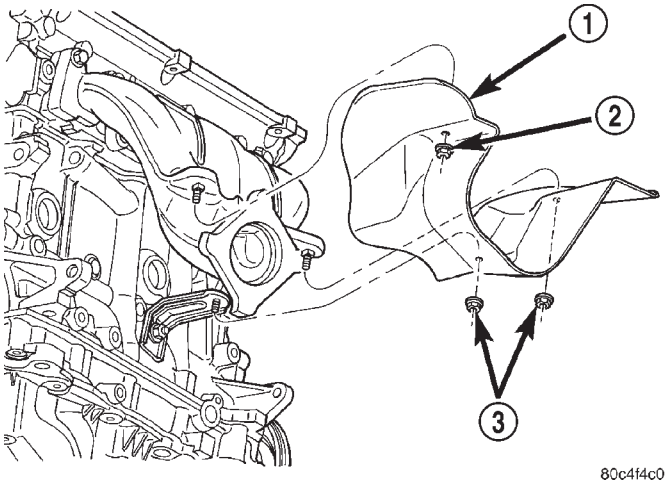

Fig. 14 Heat Shield—Engine Wiring

1 – HEAT SHIELD
2 – NUT
3 – NUT

REMOVAL AND INSTALLATION (Continued)

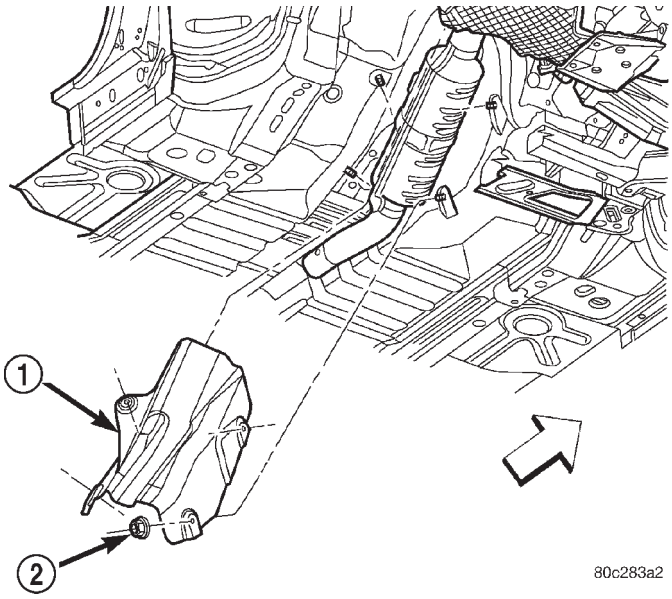

Fig. 15 Heat Shield—Catalytic Converter

1 – HEAT SHIELD
2 – NUT

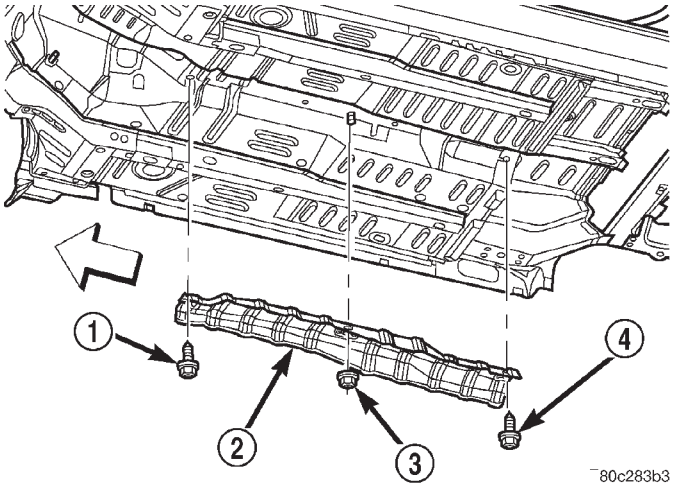

Fig. 16 Heat Shield—Intermediate Pipe

1 – SCREW
2 – HEAT SHIELD
3 – NUT
4 – SCREW

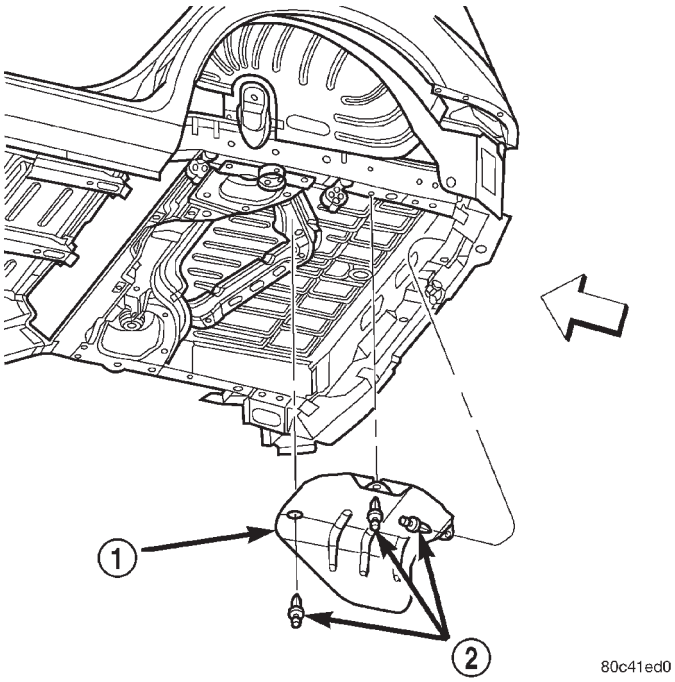

Fig. 17 Heat Shield—Muffler

1 – HEAT SHIELD
2 – FASTENER

INSTALLATION

(1) Position heat shield(s) to underbody.

(2) Install heat shield fasteners (Fig. 14), (Fig. 15), (Fig. 16), or (Fig. 17).

(3) Inspect heat shield to exhaust system clearances and adjust as necessary. Refer to ADJUSTMENTS - Exhaust System Alignment for procedure.

(4) Lower vehicle.

CLEANING AND INSPECTION

EXHAUST SYSTEM

INSPECTION

Inspect the exhaust pipes, catalytic converters, muffler, and resonators for cracked joints, broken welds and corrosion damage that would result in a leaking exhaust system. Inspect the clamps, support brackets, and insulators for cracks and corrosion damage.

NOTE: Slip joint band clamps are spot welded to exhaust system. If a band clamp must be replaced, the spot weld must be ground off.

CATALYTIC CONVERTER

INSPECTION

WARNING: THE NORMAL OPERATING TEMPERATURE OF THE EXHAUST SYSTEM IS VERY HIGH. THEREFORE, NEVER ATTEMPT TO SERVICE ANY PART OF THE EXHAUST SYSTEM UNTIL IT IS COOLED. SPECIAL CARE SHOULD BE TAKEN WHEN WORKING NEAR THE CATALYTIC CONVERTER. THE TEMPERATURE OF THE CONVERTER RISES TO A HIGH LEVEL AFTER A SHORT PERIOD OF ENGINE OPERATION TIME.

Check catalytic converter for a flow restriction. Refer to Diagnosis and Testing - Exhaust System Restriction Check for procedure.

Visually inspect the catalytic converter element by using a borescope or equivalent. Remove an oxygen sensor and insert borescope. If borescope is not available, remove converter and inspect element using a flashlight. Inspect element for cracked or melted substrate.

NOTE: Before replacing a catalytic converter, determine the root cause of failure. Most catalytic converter failures are caused by air, fuel or ignition problems. Refer to the appropriate service diagnostic information for repair procedures.

ADJUSTMENTS

EXHAUST SYSTEM ALIGNMENT

A misaligned exhaust system is usually indicated by a vibration, rattling noise, or binding of exhaust system components. These noises are sometimes hard to distinguish from other chassis noises. Inspect exhaust system for broken or loose clamps, heat shields, insulators, and brackets. Replace or tighten as necessary. It is important that exhaust system clearances and alignment be maintained.

Perform the following procedures to align the exhaust system. Refer to (Fig. 18) for clearance specifications:

(1) Loosen clamps and support brackets.

(2) Align the exhaust system starting at the front, working rearward.

(3) Tighten all clamps and brackets once alignment and clearances are achieved.

SPECIFICATIONS

EXHAUST SYSTEM CLEARANCE

SPECIFICATIONS (Continued)

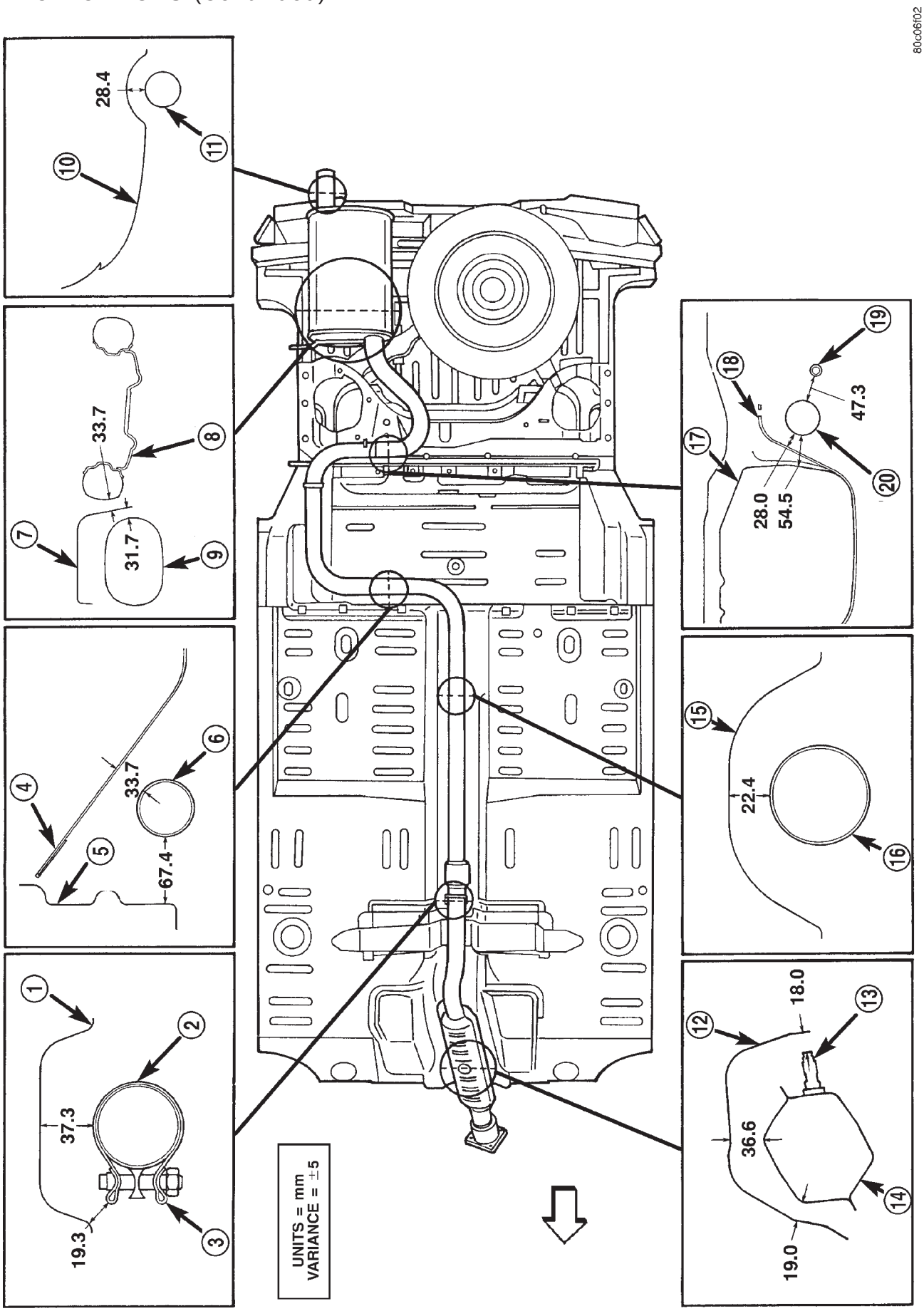

Fig. 18 Exhaust Clearance

SPECIFICATIONS (Continued)

1 – TUNNEL HEAT SHIELD
2 – INTERMEDIATE PIPE
3 – BAND CLAMP
4 – FUEL TANK STRAP
5 – FLOOR PAN
6 – INTERMEDIATE PIPE
7 – HEAT SHIELD
8 – SPARE TIRE
9 – MUFFLER
10 – REAR FASCIA
11 – TAIL PIPE
12 – HEAT SHIELD
13 – OXYGEN SENSOR
14 – CATALYTIC CONVERTER
15 – TUNNEL HEAT SHIELD
16 – INTERMEDIATE PIPE
17 – FUEL TANK
18 – TANK STRAP
19 – SUSPENSION LINKAGE
20 – INTERMEDIATE PIPE

TORQUE

DESCRIPTION	N·m	Ft. Lbs.	In. Lbs.
Band Clamps—Fastener	47	35	—
Catalytic Converter to Exhaust Manifold Flange—Fasteners	28	20	—
Intermediate Pipe Heat Shield—Fasteners	3.7	—	33
Support Brackets (Frame Rail Mounted)—Fasteners	8.5	—	75
Support Bracket (Rear Panel Mounted)—Fasteners	3.7	—	33

SPECIAL TOOLS

EXHAUST SYSTEM

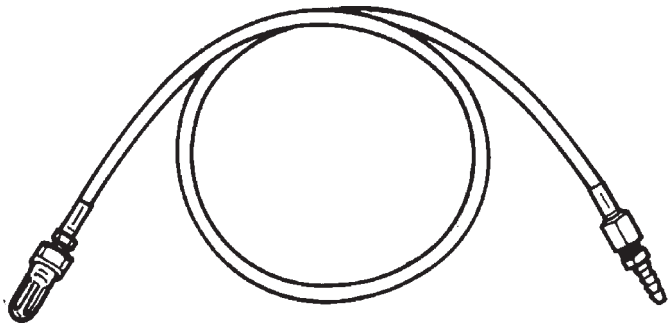

Back Pressure Test Adapter – CH8519

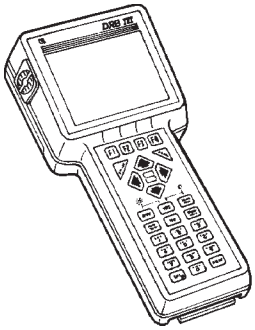

Fig. 19 DRBIII® with PEP Module – OT-CH6010A

FRAME AND BUMPERS

TABLE OF CONTENTS

page page

BUMPERS . . . . . 1 **FRAMES** 5

BUMPERS

TABLE OF CONTENTS

page page

DESCRIPTION AND OPERATION
BUMPER FASCIA. 1
REMOVAL AND INSTALLATION
FRONT BUMPER FASCIA 2
FRONT BUMPER REINFORCEMENT. 3
REAR BUMPER FASCIA 3
REAR BUMPER REINFORCEMENT. 4

DESCRIPTION AND OPERATION

BUMPER FASCIA

The bumper fascia is a decorative covering that is placed over the bumper reinforcement.

FRONT BUMPER FASCIA

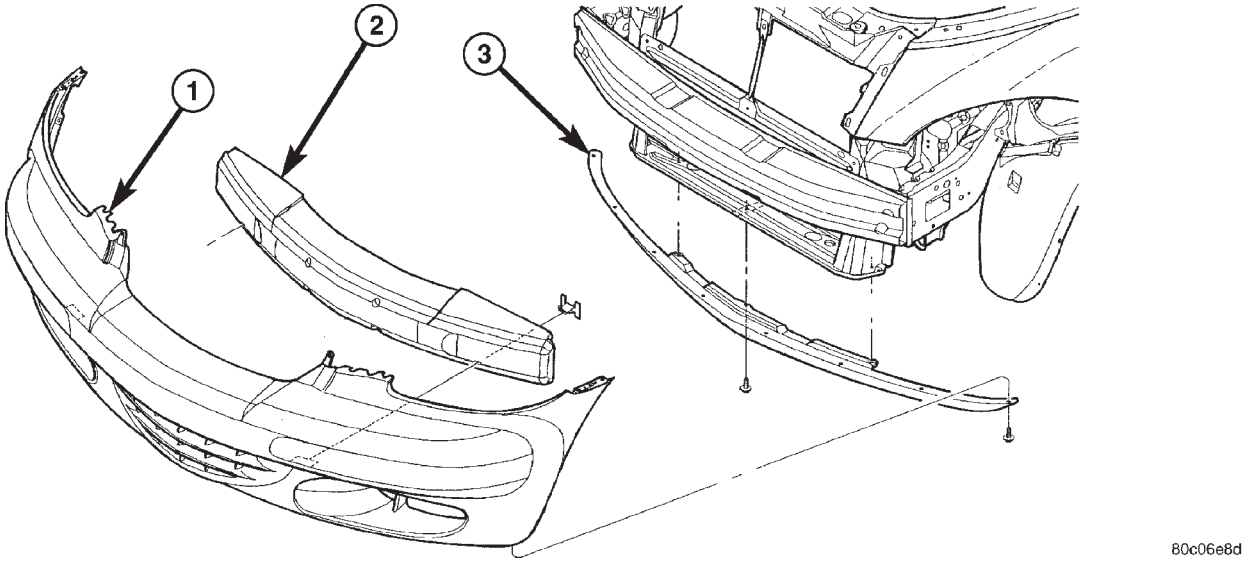

Fig. 1

1 – FRONT BUMPER FASCIA
2 – FRONT BUMPER ENERGY FOAM
3 – RADIATOR AIR DAM

DESCRIPTION AND OPERATION (Continued)

FRONT BUMPER REINFORCEMENT

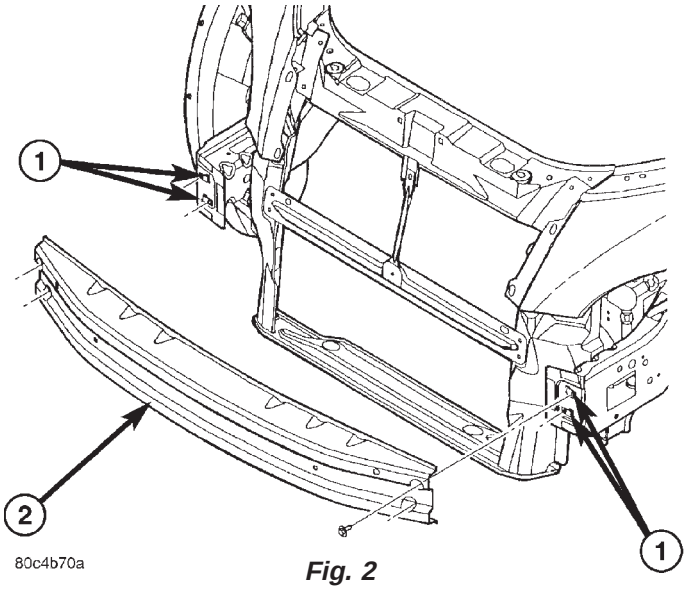

Fig. 2

1 – U-NUTS(S)
2 – FRONT BUMPER FASCIA REINFORCEMENT

REAR BUMPER FASCIA

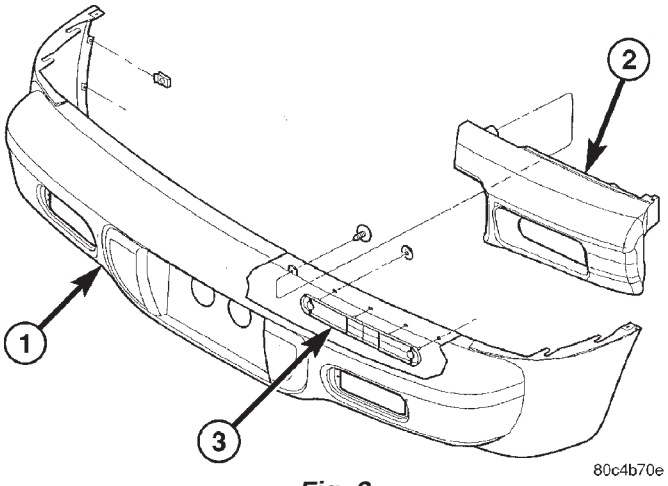

Fig. 3

1 – REAR BUMPER FASCIA
2 – REAR BUMPER FASCIA ENERGY FOAM
3 – REAR FASCIA TO CLOUSER STUD PLATE

REMOVAL AND INSTALLATION

FRONT BUMPER FASCIA

REMOVAL

(1) Remove Grille Attaching bolts.
(2) Remove Grille.
(3) Remove nuts attaching front bumper fascia to bottom of fender flange (Fig. 1).

REAR BUMPER REINFORCEMENT

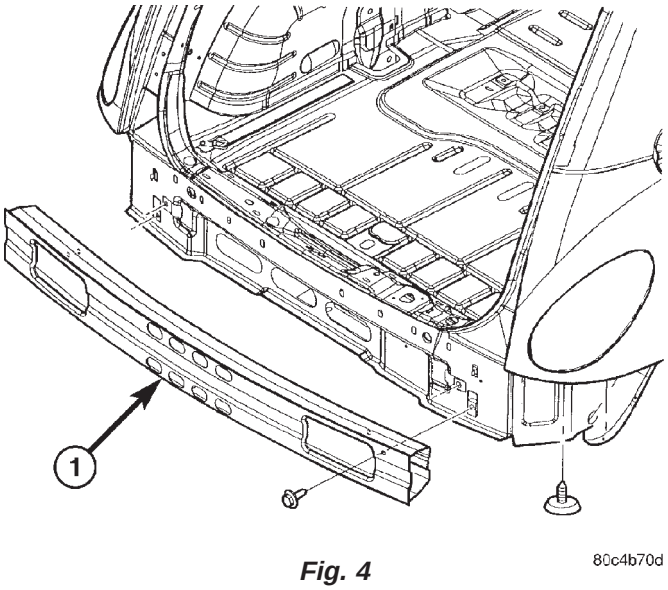

Fig. 4

1 – REAR BUMPER REINFORCEMENT

(4) Remove fasteners attaching fascia to bumper reinforcement forward of radiator (Fig. 5).
(5) Remove fasteners attaching fascia to bottom of bumper reinforcement.
(6) Remove air dam fasteners from crossmember.
(7) Remove splash shield attaching screws.
(8) Remove fascia from vehicle.

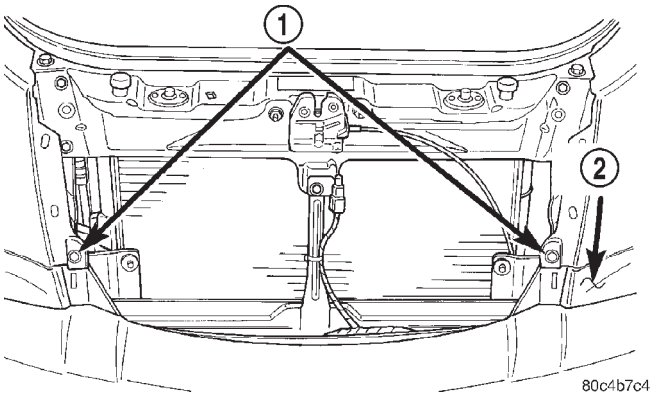

Fig. 5 Front Fascia Attaching Points

1 – ATTACHING POINTS
2 – FRONT FASCIA

INSTALLATION

(1) Position fascia on vehicle (Fig. 1).
(2) Install splash shield attaching screws.
(3) Install air dam fasteners to crossmember.
(4) Install fasteners attaching fascia to bottom of bumper reinforcement.

REMOVAL AND INSTALLATION (Continued)

(5) Install fasteners attaching fascia to bumper reinforcement forward of radiator (Fig. 5).

(6) Install nuts attaching front bumper fascia to bottom of fender flange.

(7) Install Grille and attaching bolts.

FRONT BUMPER REINFORCEMENT

REMOVAL

(1) Remove grille, and front fascia.

(2) Remove nuts attaching reinforcement to the rail assembly and Remove reinforcement (Fig. 6).

(3) Remove bumper reinforcement from vehicle.

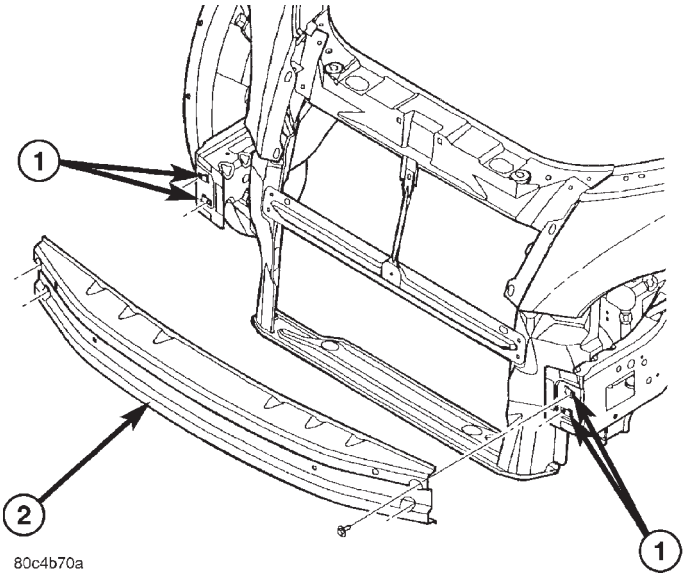

Fig. 6 Front Bumper Reinforcement

1 – U-NUT(S)
2 – FRONT BUMPER REINFORCEMENT

INSTALLATION

(1) Place bumper reinforcement in position (Fig. 6).

(2) Install nuts attaching reinforcement to rail assembly.

(3) Install front fascia and grille.

REAR BUMPER FASCIA

REMOVAL

(1) Open liftgate.

(2) Remove nuts attaching fascia to reinforcement (Fig. 7).

(3) Raise vehicle on hoist.

(4) Disconnect license lamp.

(5) Remove splash shield from fascia in the wheel opening area.

(6) Remove nuts attaching fascia to lower quarter panels.

(7) From under license plate area, remove fasteners attaching fascia.

(8) Remove fascia from vehicle.

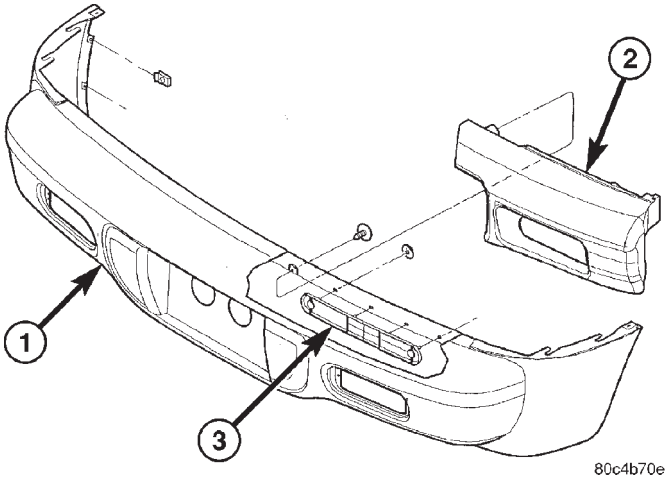

Fig. 7 Rear Bumper Fascia

1 – REAR BUMPER FASCIA
2 – REAR BUMPER ENERGY FOAM
3 – REAR FASCIA TO CLOSURE STUD PLATE

INSTALLATION

(1) Position fascia on vehicle (Fig. 7).

(2) From under license plate area, install fasteners attaching fascia.

(3) Install nuts attaching fascia to lower quarter panels.

(4) Install splash shield in the wheel opening area.

(5) Connect license lamp.

(6) Lower vehicle.

(7) Install nuts attaching fascia to reinforcement.

(8) Close liftgate.

REMOVAL AND INSTALLATION (Continued)

REAR BUMPER REINFORCEMENT

REMOVAL

(1) Remove rear fascia.

(2) Remove screws attaching reinforcement to rear closure panel (Fig. 8).

(3) Remove bumper reinforcement from vehicle.

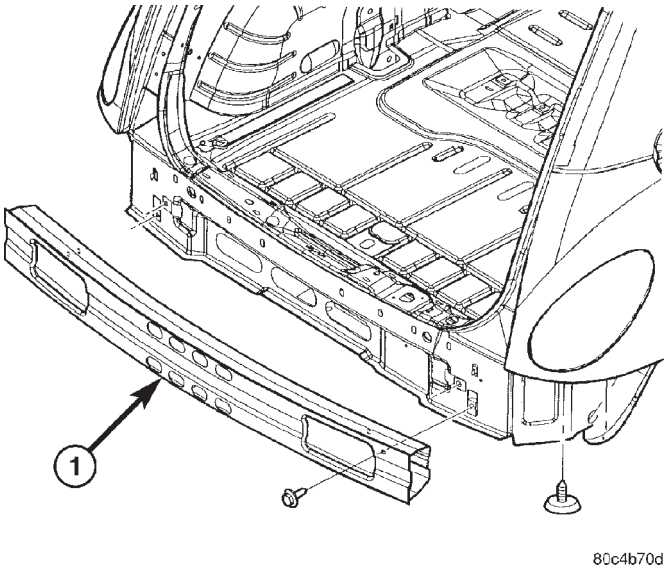

Fig. 8 Rear Bumper Reinforcement

1 – REAR BUMPER REINFORCEMENT

INSTALLATION

(1) Position bumper reinforcement to vehicle (Fig. 8).

(2) Install screws attaching reinforcement to rear closure panel.

(3) Install rear fascia.

FRAMES

TABLE OF CONTENTS

	page
DESCRIPTION AND OPERATION	
FRONT SUSPENSION	5
REMOVAL AND INSTALLATION	
FRONT SUSPENSION CROSSMEMBER	5
SPECIFICATIONS	
STRUCTURAL DIMENSIONS	10
SPECIFICATIONS	14

DESCRIPTION AND OPERATION

FRONT SUSPENSION

The front suspension crossmember must be properly installed to achieve design camber, caster settings and wheel stagger. The crossmember can be installed out of position on the frame rails due to its design. Bolts and cage nuts hold the rear of the crossmember to the frame torque boxes. Bolts and J-nuts hold the front of the crossmember to the frame rails. No designed in locating device is used to position the crossmember in the vehicle. Before removing the crossmember mark the frame torque box around the rear mounting location to aid installation. A crossmember that is removed during service must be installed in the same position from which it was removed. To verify that crossmember is in the proper position, refer to the dimensions provided. Front end dimensions are gauged from the principal locating point (PLP) holes located under the frame torque boxes rearward of the front wheels. After removal and installation of the crossmember is performed, verify that front suspension alignment is within specifications. If camber, caster settings and wheel stagger is not within specifications, loosen and reposition crossmember to bring suspension within specifications. Refer to Front Suspension for additional information.

REMOVAL AND INSTALLATION

FRONT SUSPENSION CROSSMEMBER

CAUTION: If the front suspension crossmember is being replaced due to collision damage, inspect the steering column lower coupling for damage. Refer to STEERING COLUMN in the STEERING section for the procedure.

REMOVAL

(1) Raise the vehicle. Refer to HOISTING in the LUBRICATION AND MAINTENANCE area in this service manual for the correct lifting procedure.

(2) Remove both front tire and wheel assemblies from the vehicle.

(3) Remove both stabilizer bar links from the vehicle (Fig. 1). Remove each link by holding the upper retainer/nut with a wrench and turning the link bolt.

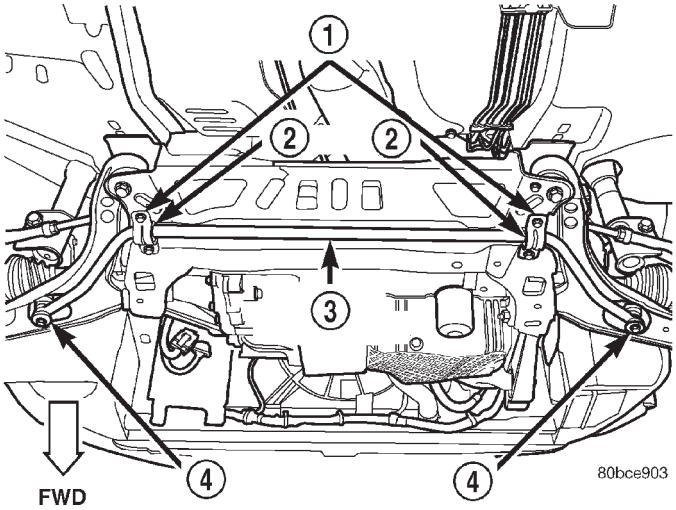

Fig. 1 Stabilizer Bar

1 – STABILIZER BAR CUSHION RETAINERS
2 – CUSHIONS
3 – FRONT STABILIZER BAR
4 – STABILIZER BAR LINKS

(4) Remove the stabilizer bar cushion retainer bolts and retainers (Fig. 1), and remove the stabilizer bar with cushions attached from the vehicle.

(5) Remove the nut and pinch bolt clamping each ball joint stud to the steering knuckle (Fig. 2).

REMOVAL AND INSTALLATION (Continued)

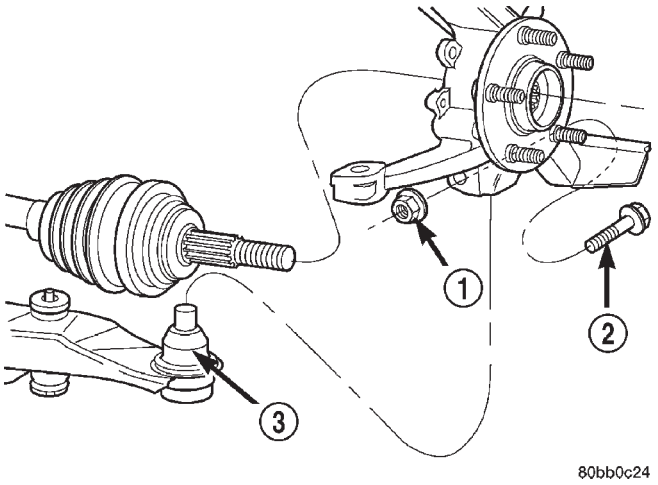

Fig. 2 Ball Joint Bolt And Nut

1 – NUT
2 – BOLT
3 – BALL JOINT

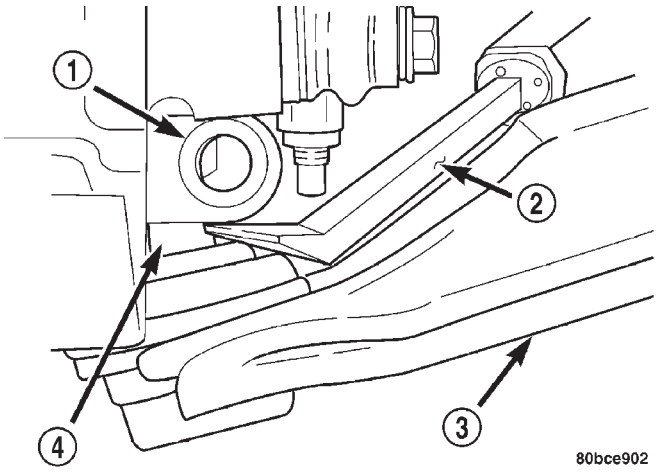

Fig. 3 Pry Bar Usage

1 – STEERING KNUCKLE
2 – PRY BAR
3 – LOWER CONTROL ARM
4 – BALL JOINT STUD

CAUTION: After removing the steering knuckle from the ball joint stud, do not pull outward on the knuckle. Pulling the steering knuckle outward at this point can separate the inner C/V joint on the driveshaft. Refer to FRONT DRIVESHAFTS in the DIFFERENTIAL AND DRIVELINE area for further information.

NOTE: Use caution when separating the ball joint stud from the steering knuckle, so the ball joint seal does not get cut.

(6) Separate each ball joint stud from the steering knuckle by prying down on lower control arm and up against the ball joint boss on the steering knuckle (Fig. 3).

(7) Remove the two screws securing the cooler to the front suspension crossmember. They are located behind the cooler and can be accessed from above. Allow the cooler to hang out of the way.

(8) Using wire or a bungee cord, support and tie off the power steering gear to the underbody of the vehicle, so when the crossmember is lowered, the gear does not fall away, being held to the vehicle by only the steering column coupling and the fluid hoses.

(9) Loosen and remove the four bolts attaching the power steering gear to the front suspension crossmember (Fig. 4). Remove the power steering gear from the front suspension crossmember.

(10) Remove the pencil strut from the right front corner of the crossmember and body of the vehicle. (Fig. 5). Remove the washer behind the strut from the torque strut bolt.

(11) Remove the screws fastening the front fascia to the reinforcement as necessary in order to access the drive-belt splash shield forward fastener screw (Fig. 6).

(12) Remove the drive-belt splash shield fasteners (Fig. 6). Remove the shield.

(13) Remove the bolt mounting the engine torque strut to the right forward corner of the front suspension crossmember (Fig. 5).

NOTE: Before removing the front suspension crossmember from the vehicle, the location of the crossmember must be scribed on the body of the vehicle. Do this so that the crossmember can be relocated upon reinstallation against the body of vehicle in the same location as before removal. If the front suspension crossmember is not reinstalled in exactly the same location as before removal, the preset front wheel alignment settings (caster and camber) will be lost.

REMOVAL AND INSTALLATION (Continued)

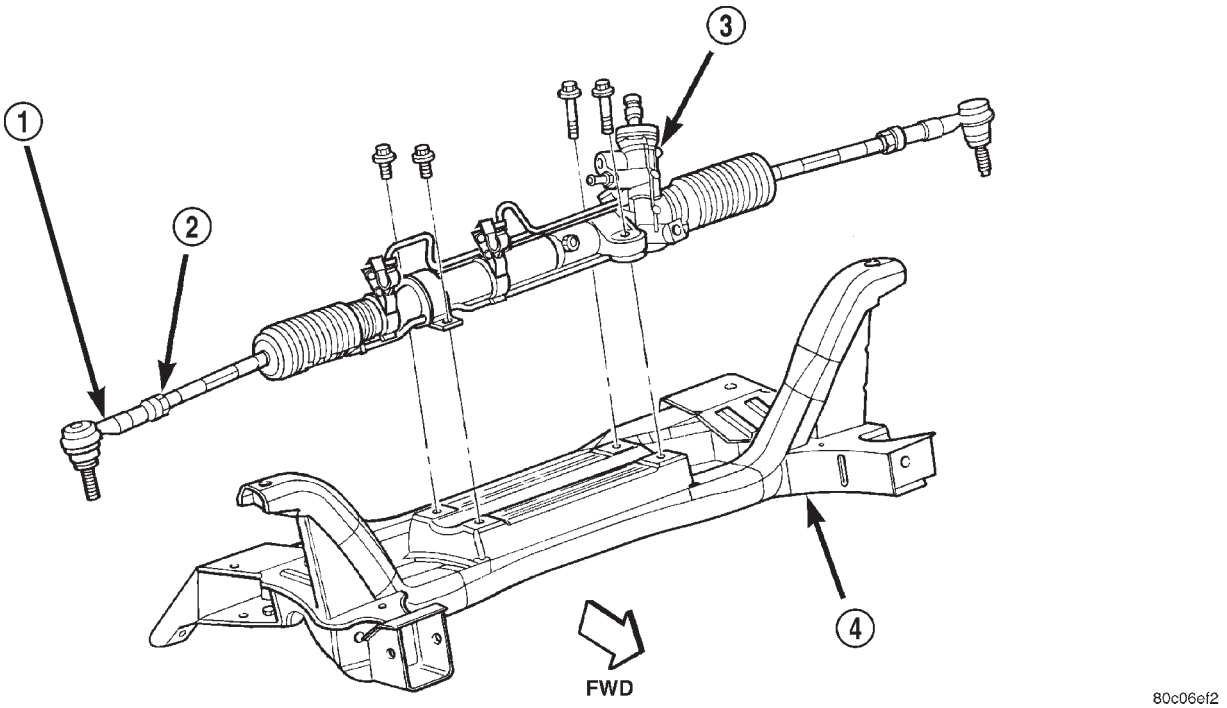

Fig. 4 Steering Gear Mounting

1 – OUTER TIE ROD
2 – JAM NUT
3 – STEERING GEAR
4 – FRONT SUSPENSION CROSSMEMBER

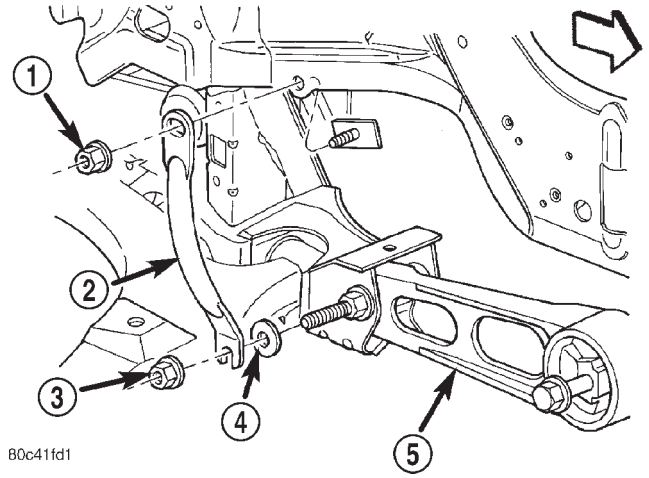

Fig. 5 Strut Mounting

1 – NUT
2 – PENCIL STRUT
3 – NUT
4 – FLAT WASHER
5 – LOWER TORQUE STRUT

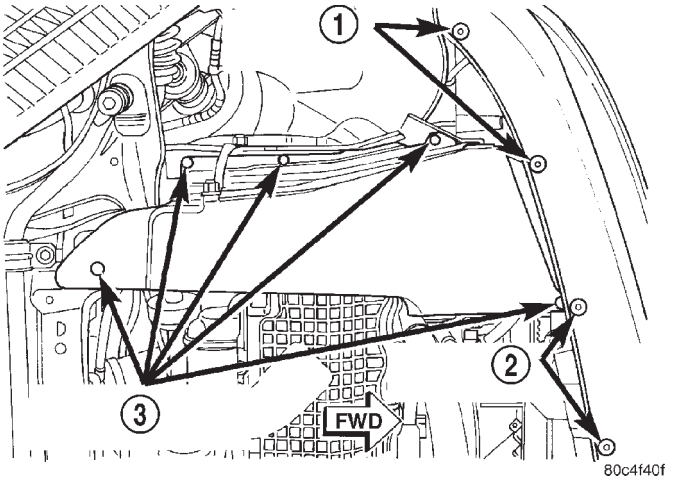

Fig. 6 Fascia And Splash Shield Fasteners

1 – FASCIA FASTENERS
2 – FASCIA FASTENERS
3 – SPLASH SHIELD FASTENERS

REMOVAL AND INSTALLATION (Continued)

(14) Using an awl, scribe a line marking the location of the front suspension crossmember where it is mounted against the body of the vehicle (Fig. 7).

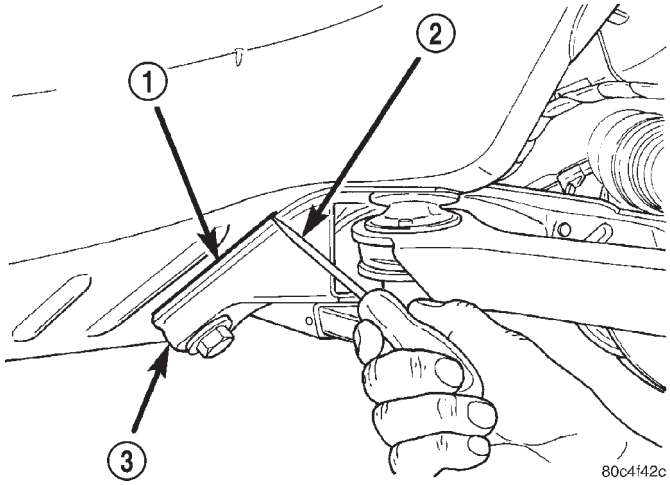

Fig. 7 Marking Crossmember Location

1 – SCRIBED LINE
2 – AWL
3 – CROSSMEMBER

(15) Position a transmission jack under the center of the front suspension crossmember and raise it to support the bottom of the crossmember.

(16) Loosen all six bolts attaching the front suspension crossmember and lower control arms to the body of the vehicle. Do not completely remove the two bolts going through the lower control arm rear isolator bushings. They are designed to disengage from the body threads yet stay within the lower control arm rear isolator bushing. Back the two bolts out just enough to disengage the tapping plates in the body of the vehicle. Completely remove the other four bolts.

(17) Lower the front suspension crossmember.

(18) Remove each lower control arm from the crossmember by removing the pivot bolts.

INSTALLATION

(1) Install the lower control arms on the front suspension crossmember. Install the pivot bolts, but do not completely tighten them at this time.

(2) Using the transmission jack, raise the front suspension crossmember and lower control arms until the crossmember contacts its mounting spot against the body and frame rails of the vehicle. As the crossmember is raised, carefully guide the power steering gear into mounting position.

(3) Start the two crossmember mounting bolts through the lower control arm rear isolator bushings into the tapping plates mounted in the body. Next, install the two front and the two rear mounting bolts attaching front suspension crossmember to frame rails of vehicle. Lightly tighten all six mounting bolts to approximately 2 N·m (20 in. lbs.) to hold the front suspension crossmember in position at this time.

NOTE: When reinstalling the front suspension crossmember back in the vehicle, it is very important that the crossmember be attached to the body in exactly the same spot as when it was removed. Otherwise, the vehicle's wheel alignment settings (caster and camber) will be lost.

(4) Using a soft face hammer, tap the front suspension crossmember back-and-forth or side-to-side until it is aligned with the previously scribed positioning marks on the body of the vehicle (Fig. 7). Once the front suspension crossmember is correctly positioned, tighten the two crossmember mounting bolts through the lower control arm rear isolator bushings to a torque of 250 N·m (185 ft. lbs.), then tighten the four remaining crossmember mounting bolts to a torque of 153 N·m (120 ft. lbs.).

(5) Tighten the lower control arm front pivot bolts to a torque of 163 N·m (120 ft. lbs.).

(6) Remove the wire or bungee cord suspending the power steering gear to the underbody.

(7) Attach the steering gear to the front suspension crossmember (Fig. 4). Install the four power steering gear mounting bolts. Tighten the mounting bolts to a torque of 61 N·m (45 ft. lbs.).

(8) Install the two screws securing the cooler to the front suspension crossmember. They are located behind the cooler.

(9) Install each ball joint stud into the steering knuckle aligning the bolt hole in the knuckle boss with the notch formed in the side of the ball joint stud.

(10) Install a new ball joint stud pinch bolt and nut (Fig. 2). Tighten the nut to a torque of 95 N·m (70 ft. lbs.).

(11) Fasten the engine torque strut to the right forward corner of the front suspension crossmember using its mounting bolt (Fig. 5). Follow the procedure described in the ENGINE service manual area to properly align and tighten the torque strut and it's mounting bolts.

(12) Install the washer on the end of the stud extending from the torque strut bolt (Fig. 5).

(13) Install the pencil strut to the right front corner of the crossmember and body of the vehicle (Fig. 5). Tighten the pencil strut nuts to a torque of 58 N·m (43 ft. lbs.).

(14) Install the drive-belt splash shield and fasteners (Fig. 6).

(15) Install the screws fastening the front fascia to the reinforcement (Fig. 6).

REMOVAL AND INSTALLATION (Continued)

NOTE: Before installing the stabilizer bar, make sure the bar is not upside-down. The stabilizer bar must be installed with the curve on the outboard ends of the bar facing downward to clear the control arms once fully installed (Fig. 8).

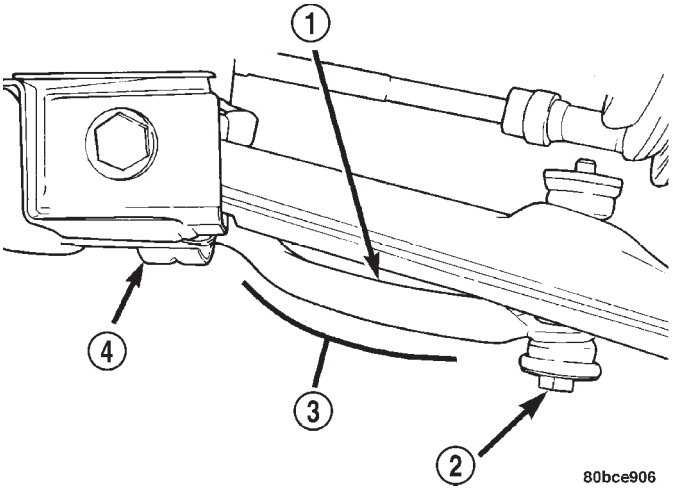

Fig. 8 Downward Curve

1 – STABILIZER BAR
2 – LINK
3 – DOWNWARD CURVE
4 – CUSHION RETAINER

(16) First, place the stabilizer bar in position on the front suspension crossmember. The slits in each cushion must point toward the front of the vehicle and sit directly on top of the raised beads formed into the stamping on the crossmember. Next, install the cushion retainers, matching the raised beads formed into the cushion retainers to the grooves formed into the cushions. Install the cushion retainer bolts, but do not completely tighten them at this time.

(17) Install both stabilizer bar links back on vehicle (Fig. 1). Start each stabilizer bar link bolt with bushing from the bottom, through the stabilizer bar, inner link bushings, lower control arm, and into the upper retainer/nut and bushing. Do not fully tighten the link assemblies at this time.

(18) Install the tire and wheel assemblies back on vehicle. Tighten the wheel mounting nuts to 135 N·m (100 ft. lbs.) torque.

(19) Lower the vehicle.

NOTE: It may be necessary to put the vehicle on a platform hoist or alignment rack to gain access to the stabilizer bar mounting bolts with the vehicle at curb height.

(20) Tighten each stabilizer bar link by holding the upper retainer/nut with a wrench and turning the link bolt. Tighten each link bolt to a torque of 28 N·m (250 in. lbs.).

(21) Tighten the stabilizer bar cushion retainer bolts to a torque of 28 N·m (250 in. lbs.).

(22) Check the front wheel alignment on the vehicle. Refer to WHEEL ALIGNMENT in the SUSPENSION service manual area.

SPECIFICATIONS

STRUCTURAL DIMENSIONS

Structural dimensions are listed in metric measurements. All dimensions are from center to center of Principal Locating Point (PLP), or from center to center of PLP and fastener location.

ENGINE COMPARTMENT TOP VIEW

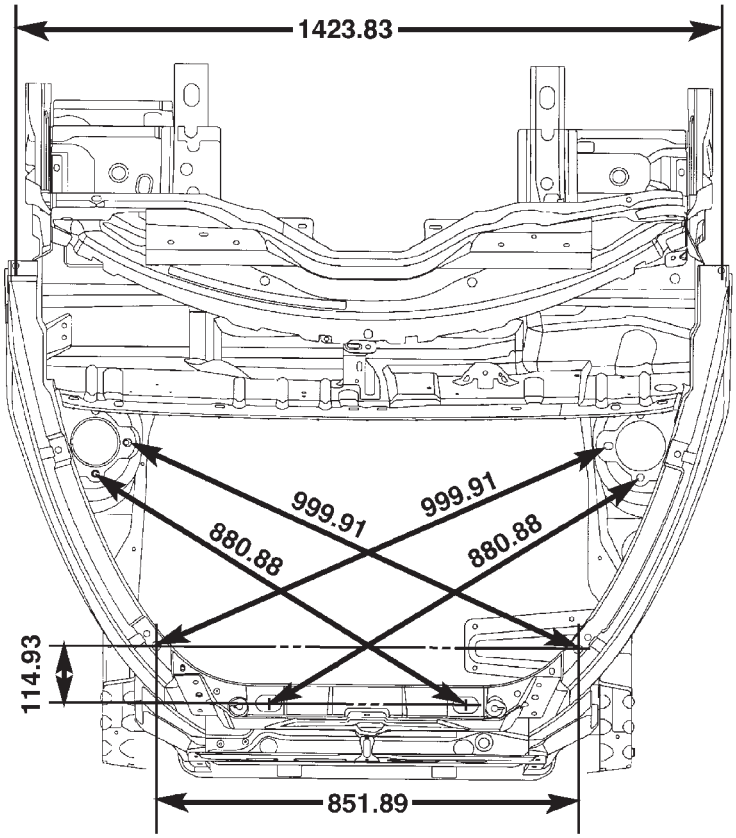

80c57b2d

SPECIFICATIONS (Continued)

ENGINE COMPARTMENT SIDE AND BOTTOM VIEW

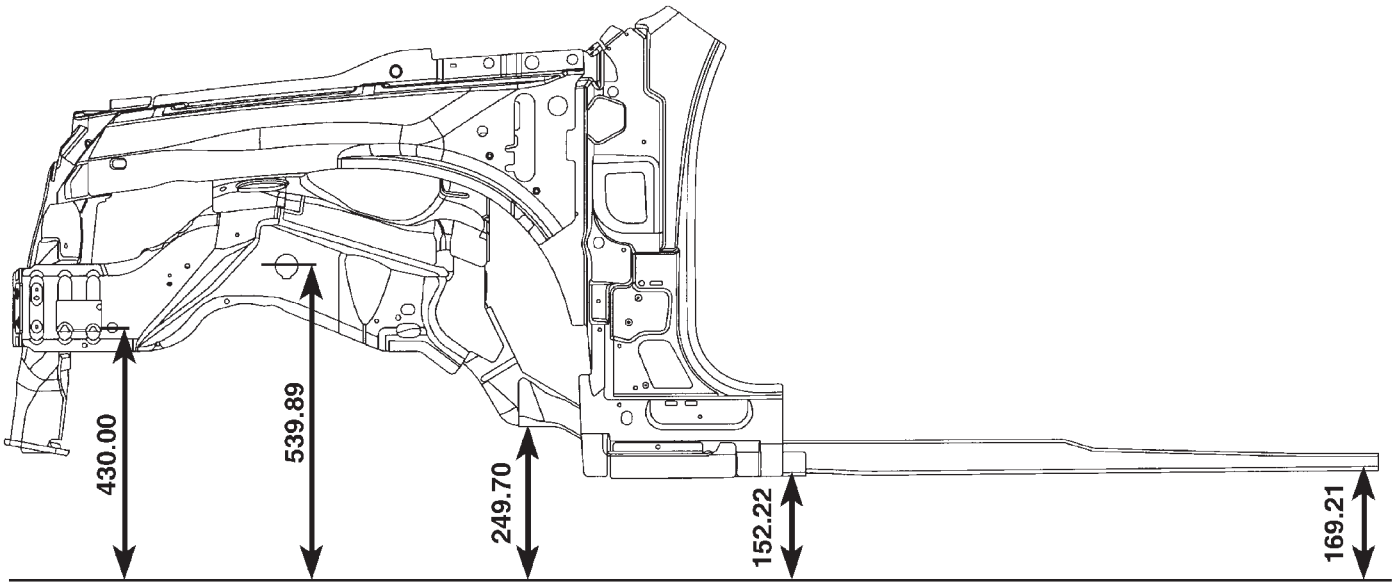

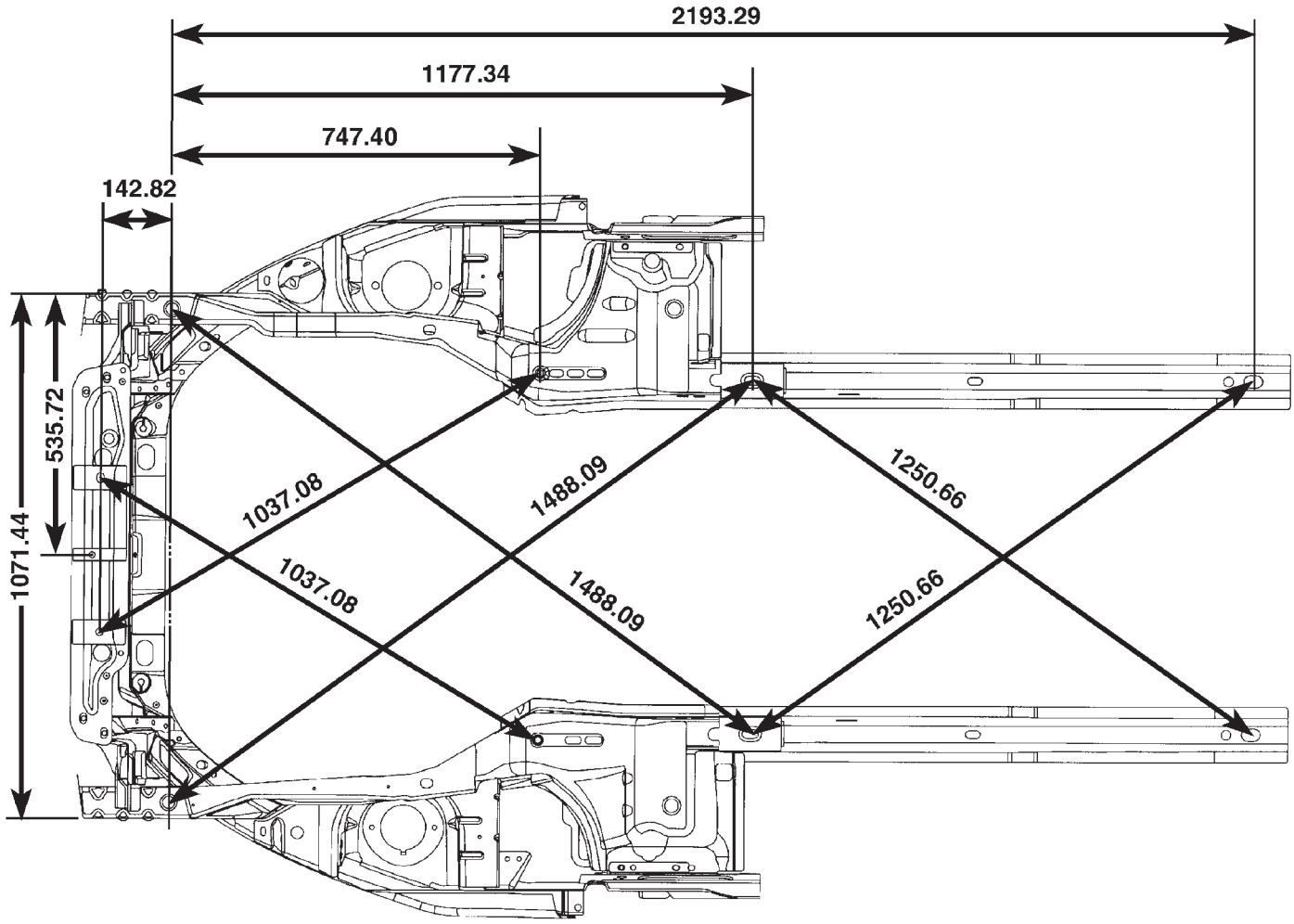

80c57b2e

SPECIFICATIONS (Continued)

REAR FRAME SECTION SIDE AND BOTTOM VIEW

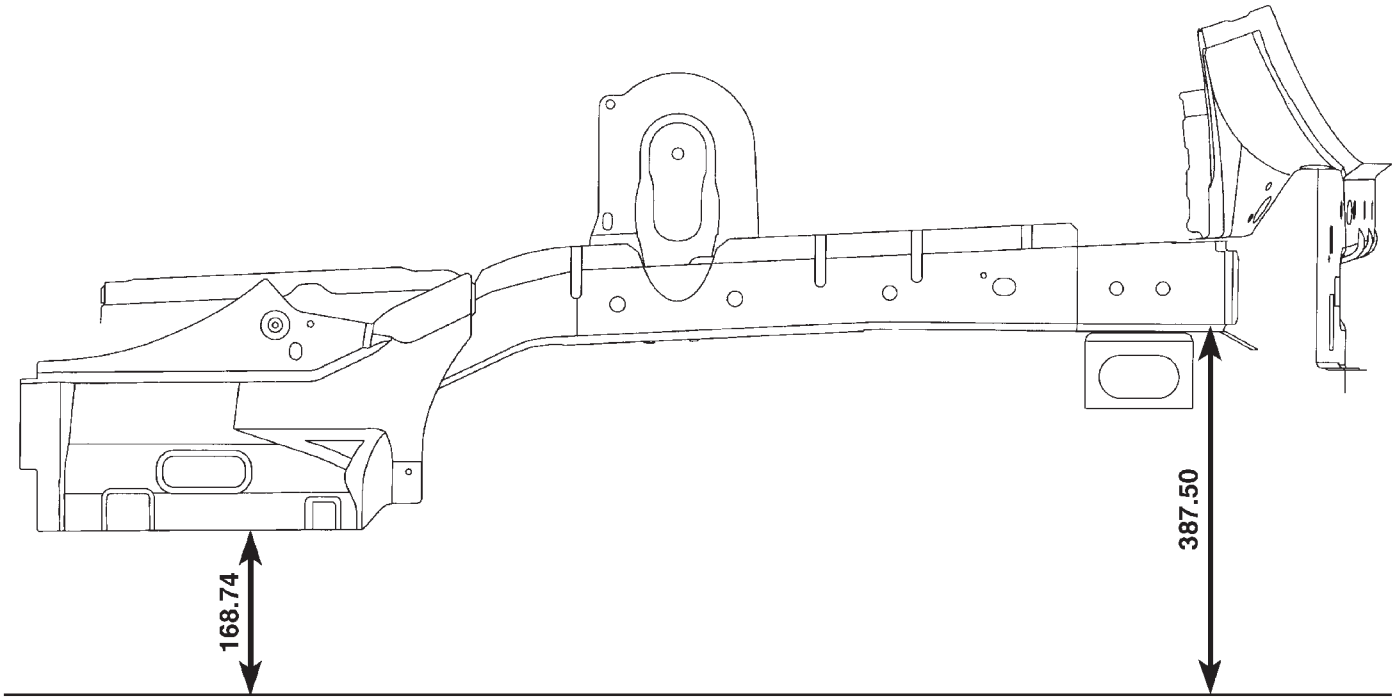

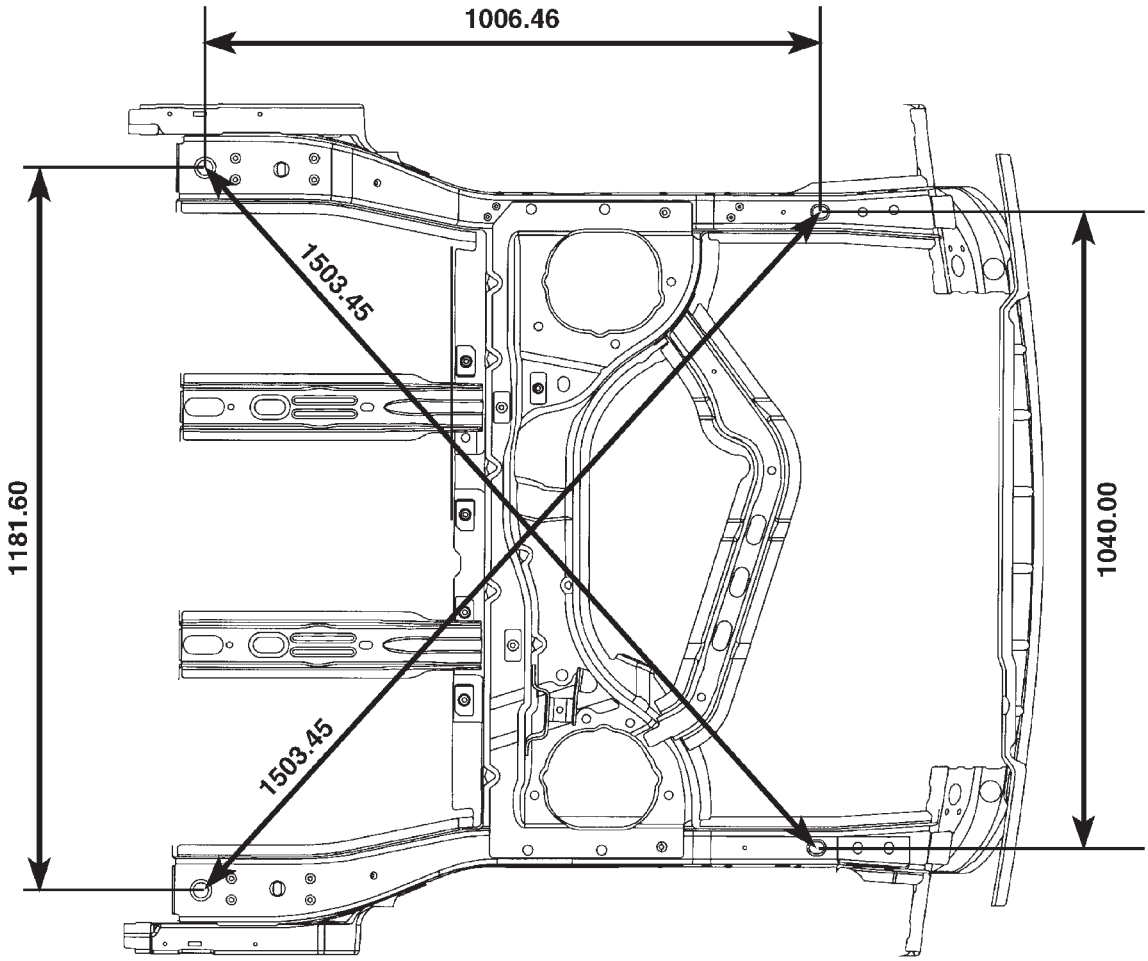

80c57b2f

SPECIFICATIONS (Continued)

WINDSHIELD OPENING DIMENSIONS

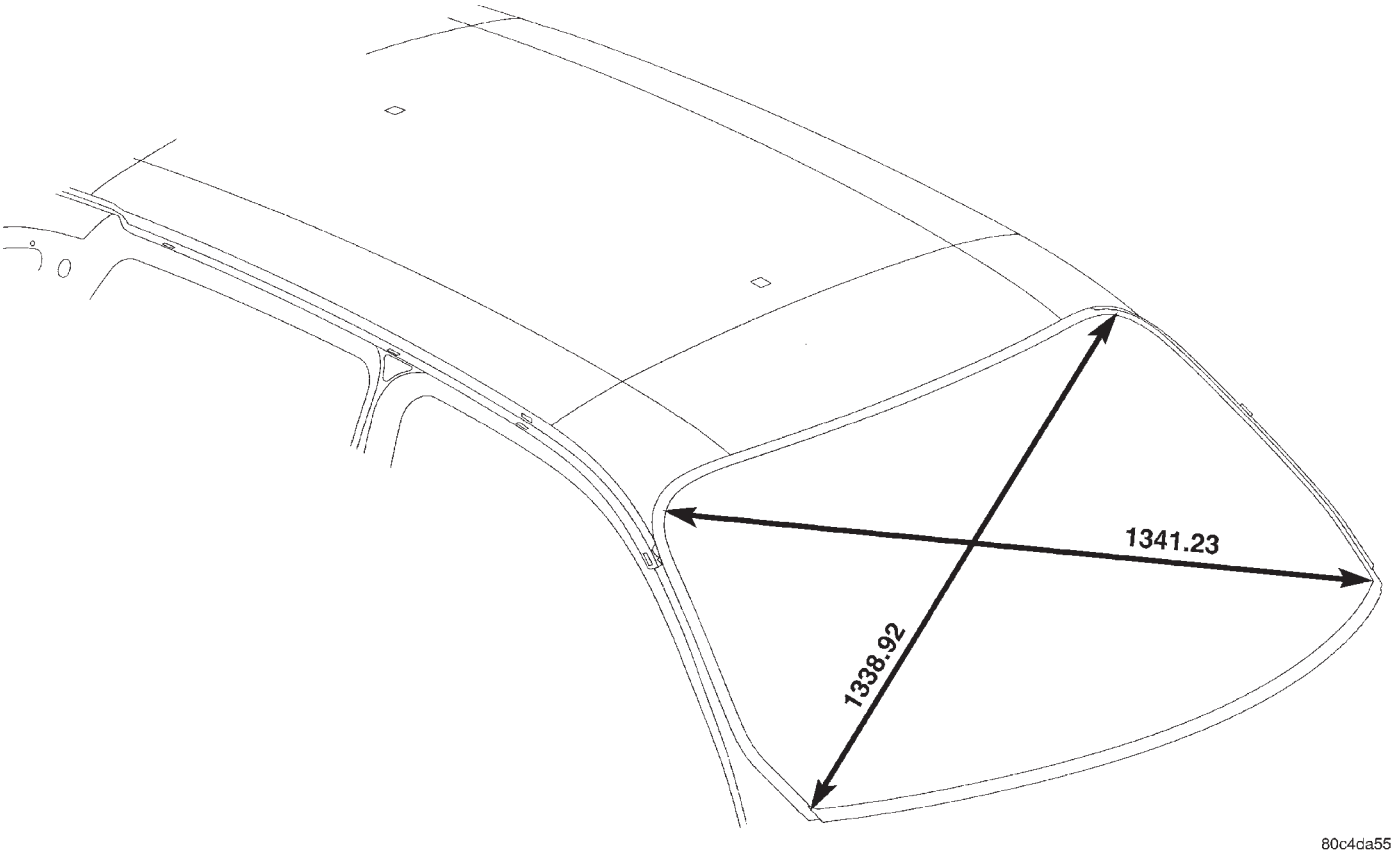

FRONT AND REAR DOOR OPENING DIMENSIONS

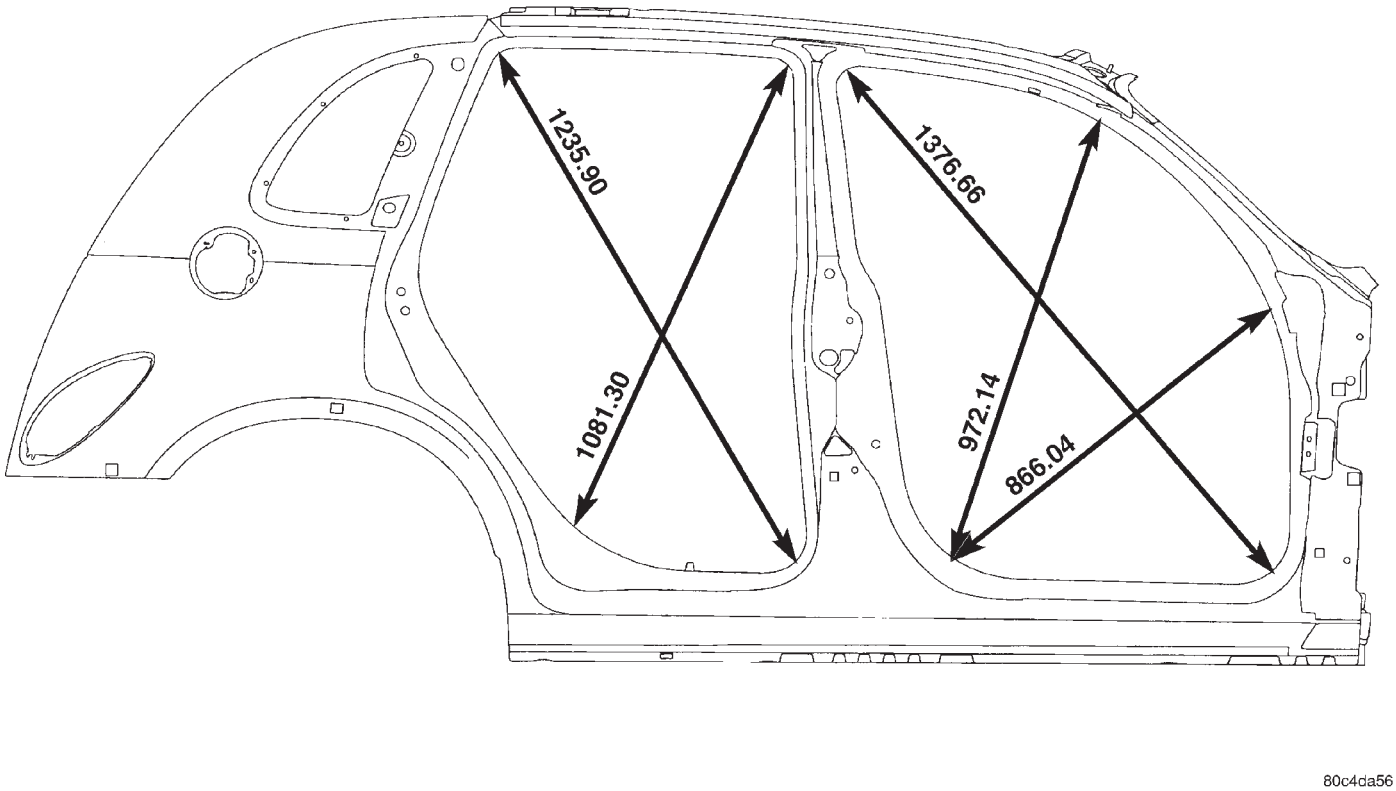

SPECIFICATIONS (Continued)

REAR LIFTGATE OPENING DIMENSIONS

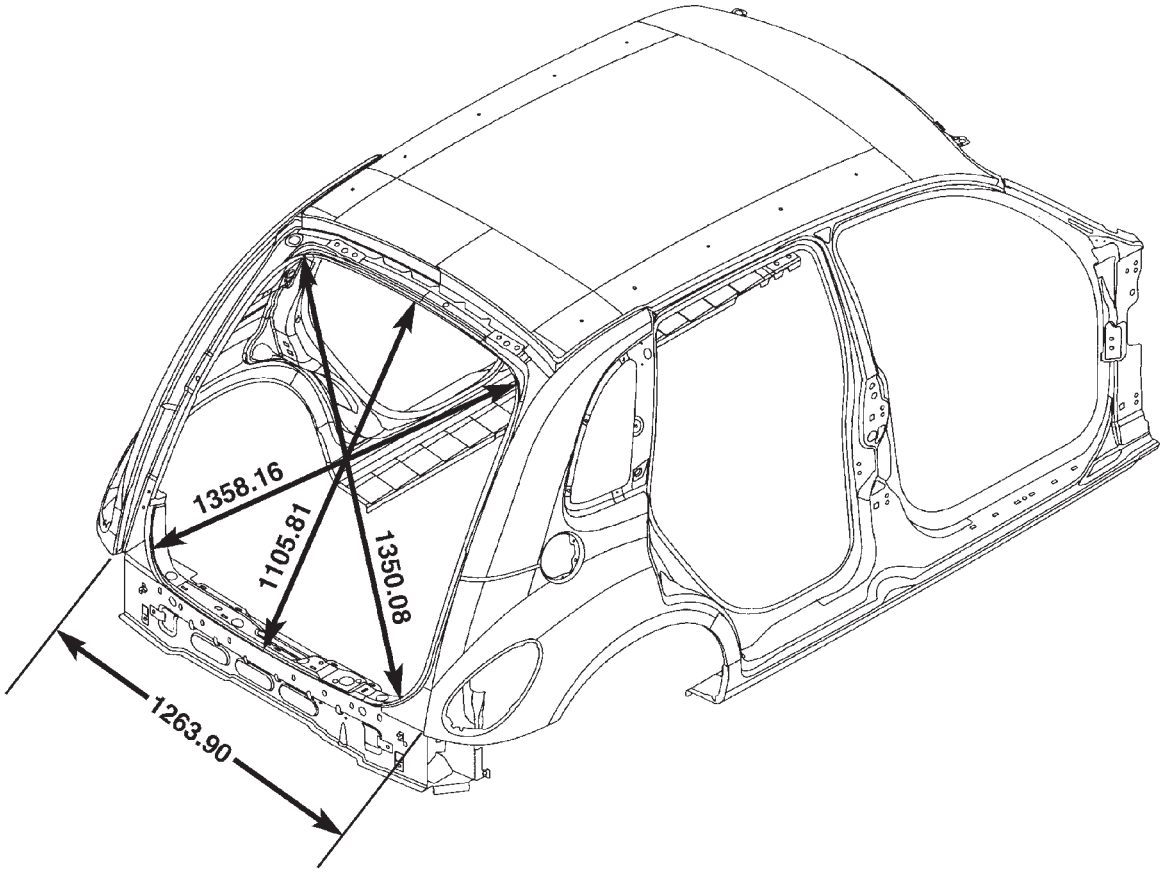

80c4da57

SPECIFICATIONS

Front Bumper Reinforcement Nut 156 N·m (115ft. lbs.)
Rear Bumper Reinforcement Nut 156 N·m (115 ft. lbs.)
Front Crossmember to Body Mounting Bolts 163 N·m (120 ft. lbs.)

FRAME AND BUMPERS

TABLE OF CONTENTS

page

DESCRIPTION AND OPERATION
EMERGENCY FRONT AND REAR TOW EYES . . . 1
REMOVAL AND INSTALLATION
EMERGENCY FRONT TOW EYE 2
REAR TOW EYE 2
SPECIFICATIONS
TORQUE SPECIFICATIONS 3

DESCRIPTION AND OPERATION

EMERGENCY FRONT AND REAR TOW EYES

DESCRIPTION

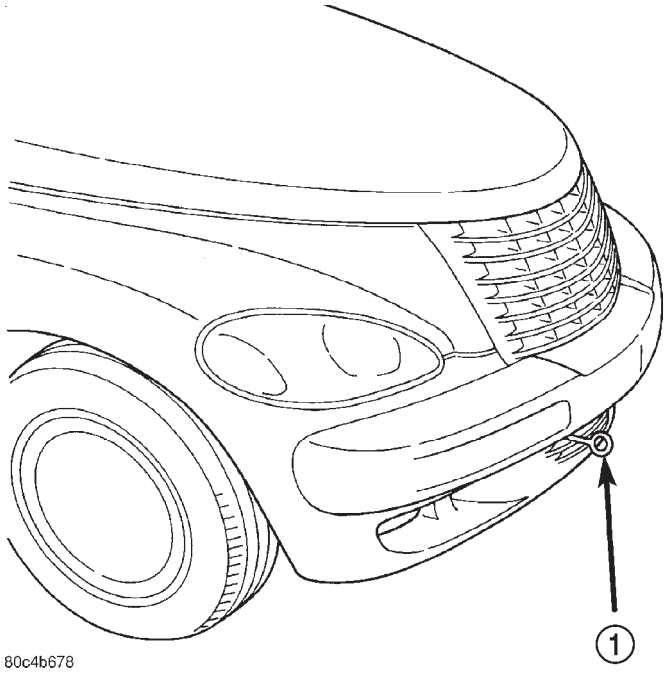

Fig. 1 Emergency Front Tow Eye
1 – FRONT TOW EYE

Some vehicles are equipped with emergency tow eye's (Fig. 1) and (Fig. 2). These tow eyes attach directly to the frame of the vehicle. The tow eyes are intended for short distance emergency towing only. During assembly of a new vehicle the front tow eye is left in the glove compartment for shipping reasons. If a replacement front tow eye is required it can be ordered through local Mopar™ Parts Retailers.

OPERATION

When an emergency occurs and a vehicle must be towed. The front tow eye can be removed from the glove compartment and threaded into the receiving hole in the front tow eye bracket. Located in the bottom of the front fascia (Fig. 1). In some cases a protective plug must be removed from the front tow eye bracket prior to tow eye installation. This will provide sufficient location for hookup of a tow rope or strap without damaging the vehicle.

The rear emergency tow eye is installed at the factory and is not intended to ever be removed from the vehicle (Fig. 2).

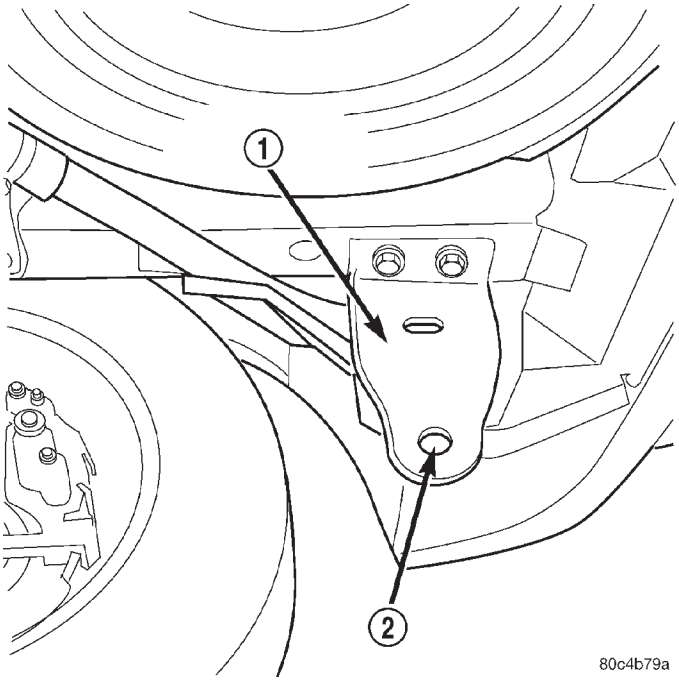

Fig. 2 Emergency Rear Tow Eye
1 – REAR TOW EYE BRACKET
2 – REAR TOW EYE

WARNING: Stand clear of vehicles when towing. Tow straps or ropes may break and cause serious personal injury.

DESCRIPTION AND OPERATION (Continued)

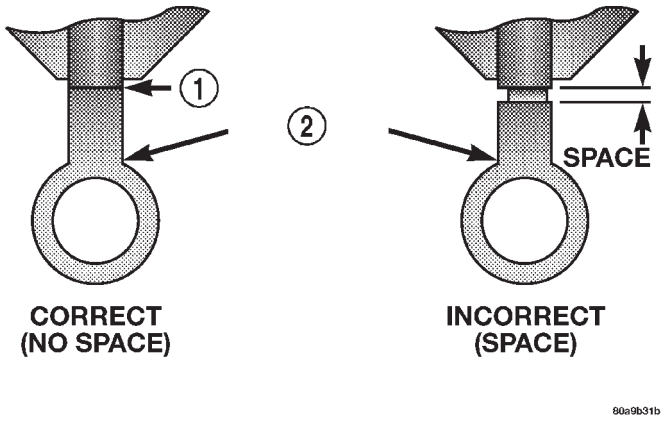

Fig. 3 Front Tow Eye Installation

1 – NO SPACE
2 – TOW HOOK

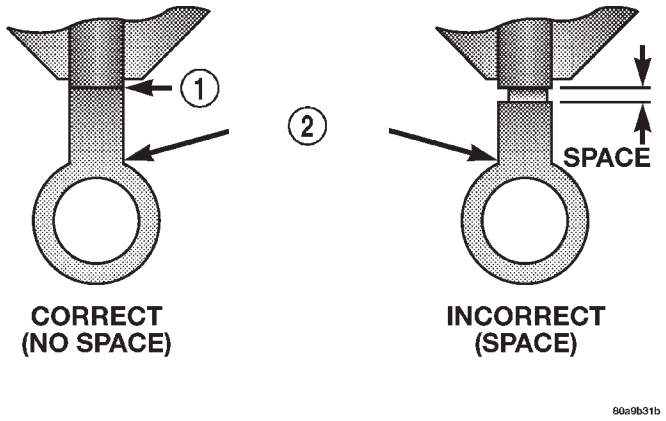

Fig. 4 Front Tow Eye Installation

1 – NO SPACE
2 – TOW HOOK

WARNING: Do not use front tow eye to lift the vehicle off the ground. Serious personal injury could result.

CAUTION: Tow eyes are intended for emergency use only, to rescue a stuck or inoperable vehicle. Do not use tow eye for tow truck hookup or highway towing. You could damage your vehicle.

REMOVAL AND INSTALLATION

EMERGENCY FRONT TOW EYE

REMOVAL

(1) The front tow eye contains left hand threads, simply unthread the tow eye from the tow eye bracket.

INSTALLATION

(1) Lubricate the threads and install the front tow eye in the front tow eye bracket. Tighten tow eye until firmly seated against bracket (Fig. 4). No torque specification is required.

REAR TOW EYE

REMOVAL

(1) Raise the vehicle on hoist. Refer to Group 0, Lubrication and Maintenance for lifting procedure.

(2) Remove the bolts holding rear tow eye to rear frame rail (Fig. 5).

INSTALLATION

(1) Position rear tow eye on vehicle.

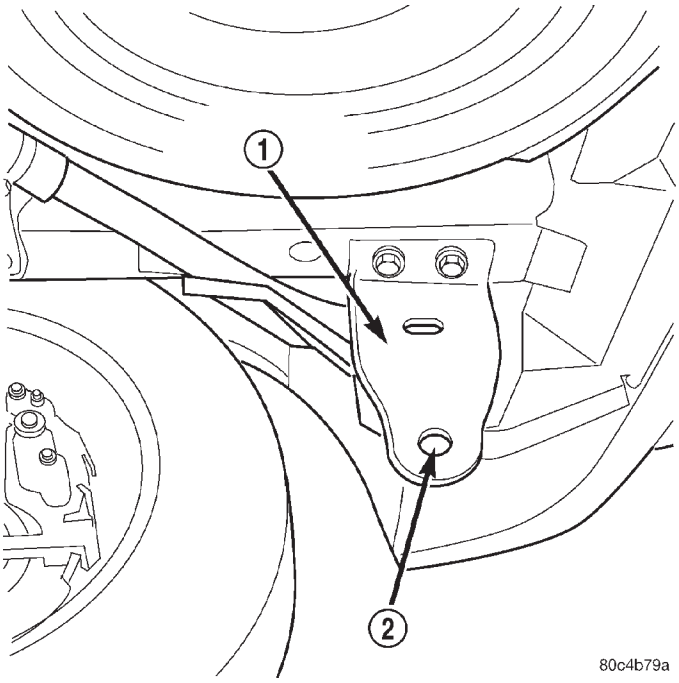

Fig. 5 Rear Tow Eye

1 – REAR TOW EYE BRACKET
2 – REAR TOW EYE

(2) Install bolts to hold rear tow eye bracket to rear frame rail. Torque bolts to 75–115 N·m (55–85 ft. lbs.).

(3) Lower the vehicle from hoist.

SPECIFICATIONS

TORQUE SPECIFICATIONS

DESCRIPTION	TORQUE
REAR TOW BRACKET	
Bolts	75-115 N·m (55-85 ft. lbs.)

2001 PT CRUISER

FUEL SYSTEM

TABLE OF CONTENTS

page

FUEL DELIVERY SYSTEM 1

page

FUEL INJECTION SYSTEM 21

FUEL DELIVERY SYSTEM

TABLE OF CONTENTS

page

DESCRIPTION AND OPERATION
FUEL DELIVERY SYSTEM 1
FUEL PUMP MODULE 2
ELECTRIC FUEL PUMP 2
FUEL LEVEL SENSOR 2
FUEL TANK 3
FUEL INJECTORS 3
FUEL PRESSURE REGULATOR 3
PRESSURE-VACUUM FILLER CAP 4
ONBOARD REFUELING VAPOR RECOVERY (ORVR) 4
FLOW MANAGEMENT VALVE 5
VEHICLE DOES NOT FILL 6
ROLLOVER VALVES 6
QUICK-CONNECT FITTINGS 6
FUEL TUBES/LINES/HOSES AND CLAMPS 6
SERVICE PROCEDURES
FUEL SYSTEM PRESSURE RELEASE PROCEDURE 7
FUEL PUMP REPLACEMENT 7
FUEL TANK DRAINING 7
QUICK-CONNECT FITTINGS 8
HOSES AND CLAMPS 10
REMOVAL AND INSTALLATION
AUTOMATIC SHUTDOWN RELAY 10
FUEL PUMP RELAY 10
FUEL TANK 10
FUEL PUMP MODULE 12
FUEL LEVEL SENSOR 13
FUEL RAIL—2.4L 14
FUEL INJECTOR—2.4L 15
FUEL FILLER NECK 15
ACCELERATOR PEDAL 16
THROTTLE CABLE—2.4L 17
ENGINE COVER 17
SPECIFICATIONS
TORQUE 18
FUEL SYSTEM PRESSURE 19
FUEL TANK CAPACITY 19
FUEL REQUIREMENTS 19

DESCRIPTION AND OPERATION

FUEL DELIVERY SYSTEM

DESCRIPTION

The front wheel drive car uses a plastic fuel tank located rear center of the vehicle.

The in-tank fuel pump module contains the fuel pump and pressure regulator. The pump is serviced as part of the fuel pump module. Refer to Fuel Pump Module.

The fuel delivery system consists of:

- The fuel pump module containing the electric fuel pump, fuel filter/fuel pressure regulator, fuel gauge sending unit (fuel level sensor) and a separate fuel filter located at bottom of pump module
- Fuel tubes/lines/hoses
- Quick-connect fittings
- Fuel injector rail
- Fuel injectors
- Fuel tank
- Fuel tank filler/vent tube assembly
- Fuel tank filler tube cap

OPERATION

A returnless fuel system is used on all vehicles. Fuel is returned through the fuel pump module and back to the fuel tank. A separate fuel return line from the tank to the engine is no longer used.

DESCRIPTION AND OPERATION (Continued)

Relieve fuel system pressure before servicing fuel system components. Refer to the Fuel System Pressure Release Procedure and follow all Cautions and Warnings. Most fuel system components attach to the fuel lines with quick connect fittings. Refer to Quick Connect Fittings in this section.

FUEL PUMP MODULE

DESCRIPTION

The fuel pump module is installed in the top of the fuel tank (Fig. 1).

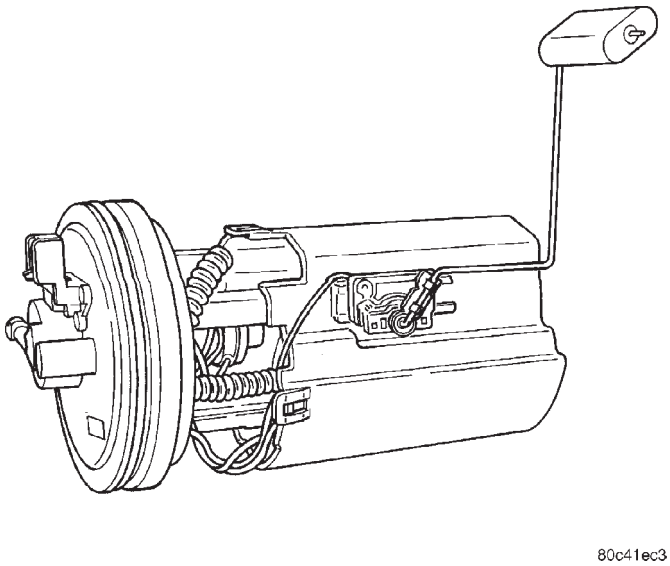

Fig. 1 Fuel Pump Module

The fuel pump module contains the following:

- Electric fuel pump
- Fuel pump reservoir
- Inlet strainer
- Fuel pressure regulator
- Fuel gauge sending unit
- Fuel supply line connection
- Fuel Filter

The fuel level sensor is the only serviceable items. If the fuel pump or electrical wiring harness requires service, replace the fuel pump module.

ELECTRIC FUEL PUMP

DESCRIPTION

The electric fuel pump is located in and is part of the fuel pump module. It is a positive displacement, gerotor type, immersible pump with a permanent magnet electric motor. The fuel pump module is suspended in fuel in the fuel tank.

OPERATION

The pump draws fuel through a strainer and pushes it through the motor to the outlet. The pump contains a check valve. The valve, in the pump outlet, maintains pump pressure during engine off conditions. The fuel pump relay provides voltage to the fuel pump. The fuel pump has a maximum deadheaded pressure output of approximately 880 kPa (130 psi). The regulator adjusts fuel system pressure to approximately 400 ±14 kPa (58 ±2 psi).

FUEL PUMP ELECTRICAL CONTROL

Voltage to operate the electric pump is supplied through the fuel pump relay. For an electrical operational description of the fuel pump refer to fuel Pump Relay—PCM Output.

FUEL LEVEL SENSOR

DESCRIPTION

The level sensor is attached to the side of the fuel pump module (Fig. 2). The level sensor consists of a float, an arm, and a variable resistor.

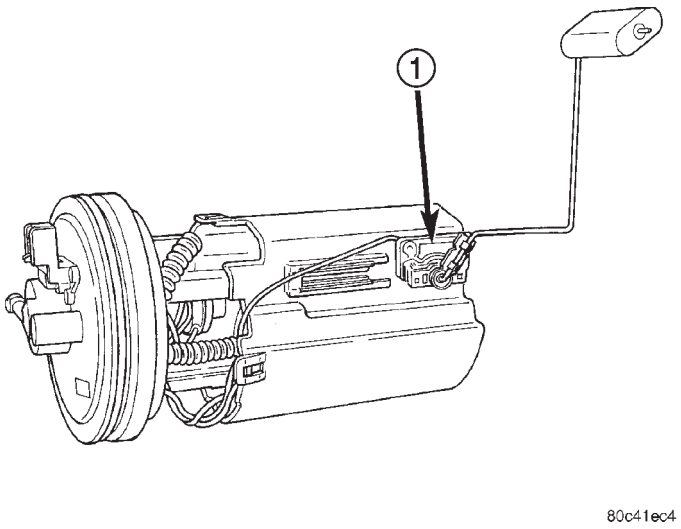

Fig. 2 Fuel Level Sensor

1 – FUEL LEVER SENSOR

OPERATION

As the fuel level increases, the float and arm move up. This decreases the sending unit resistance, causing the fuel gauge on the instrument panel to read full. The fuel level sensor (fuel gauge sending unit) sends a signal to the BCM and the BCM sends the signal over the PCI bus circuit to the PCM to indicate fuel level. The purpose of this feature is to prevent a false setting of misfire and fuel system monitor trouble codes if the fuel level is less than approximately 15 percent of its rated capacity. It is

DESCRIPTION AND OPERATION (Continued)

also used to send a signal for fuel gauge operation via the PCI bus circuits.

FUEL TANK

DESCRIPTION

The fuel tank is constructed of a plastic material. Its main functions are for fuel storage and for placement of the fuel pump module (Fig. 3). The tank is made from High density Polyethylene (HDPE) material.

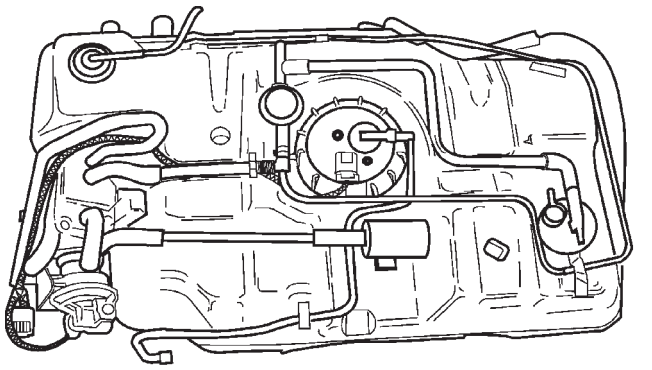

Fig. 3 Fuel Tank

OPERATION

All models pass a full 360 degree rollover test without fuel leakage. To accomplish this, fuel and vapor flow controls are required for all fuel tank connections.

All models are equipped with one rollover valve mounted into the top of the fuel tank.

An evaporation control system is connected to the rollover valve(s) to reduce emissions of fuel vapors into the atmosphere. When fuel evaporates from the fuel tank, vapors pass through vent hoses or tubes to a charcoal canister where they are temporarily held. When the engine is running, the vapors are drawn into the intake manifold. Certain models are also equipped with a self-diagnosing system using a Leak Detection Pump (LDP). Refer to the Emission Control System for additional information.

FUEL INJECTORS

DESCRIPTION

The injectors are positioned in the intake manifold with the nozzle ends directly above the intake valve port (Fig. 4).

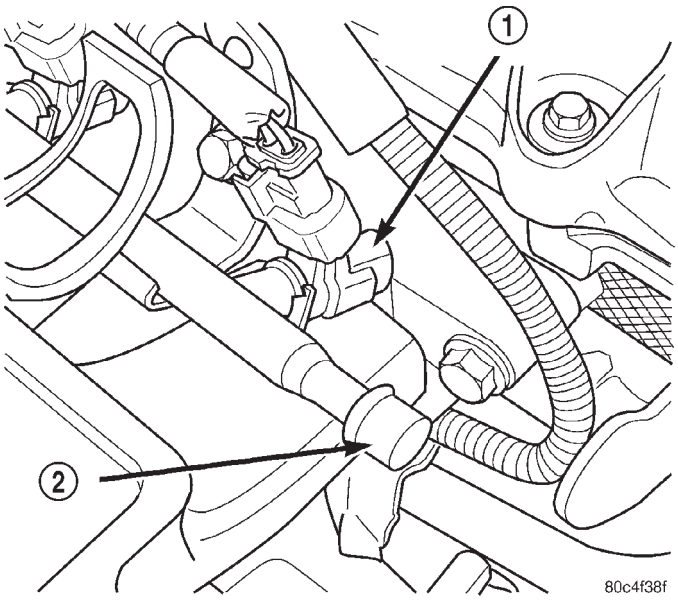

Fig. 4 Fuel Injector Location—Typical

1 – FUEL INJECTOR
2 – FUEL TEST PORT

OPERATION

The fuel injectors are electrical solenoids (Fig. 5). The injector contains a pintle that closes off an orifice at the nozzle end. When electric current is supplied to the injector, the armature and needle move a short distance against a spring, allowing fuel to flow out the orifice. Because the fuel is under high pressure, a fine spray is developed in the shape of a hollow cone. The spraying action atomizes the fuel, adding it to the air entering the combustion chamber. Fuel injectors are not interchangeable between engines.

FUEL PRESSURE REGULATOR

DESCRIPTION

The fuel pressure regulator contains a diaphragm, calibrated spring and a fuel return valve. The regulator is mounted in the fuel pump module (Fig. 6).

OPERATION

The fuel system uses a nonadjustable pressure regulator that maintains fuel system pressure at approximately 400 ±34 kPa (58 ±5 psi). The spring pushes down on the diaphragm and closes off the fuel return port. System fuel pressure reflects the amount of fuel pressure required to open the return port.

The pressure regulator is a mechanical device that is NOT controlled by the PCM or engine vacuum.

DESCRIPTION AND OPERATION (Continued)

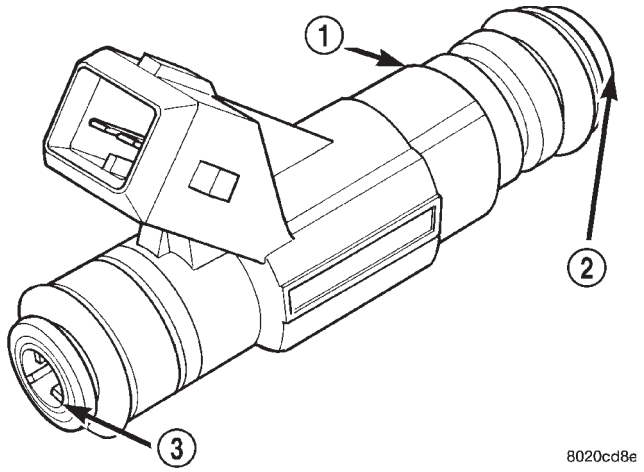

Fig. 5 Fuel Injector

1 – FUEL INJECTOR
2 – NOZZLE
3 – TOP (FUEL ENTRY)

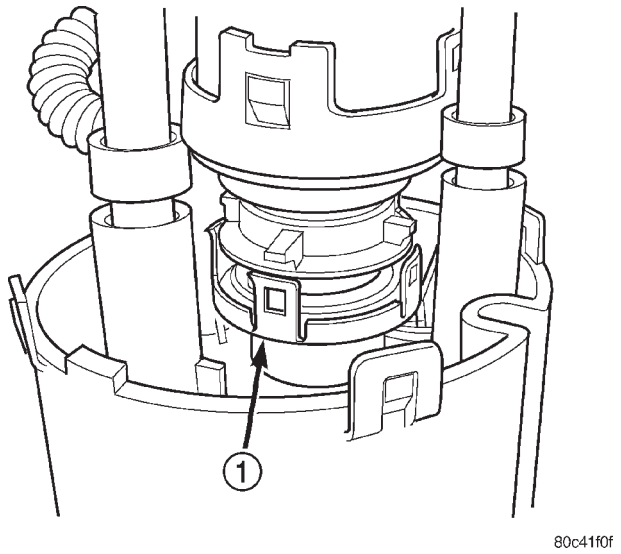

Fig. 6 Fuel Pressure Regulator

1 – FUEL PRESSURE REGULATOR

PRESSURE-VACUUM FILLER CAP

DESCRIPTION

The plastic fuel fill cap is threaded/quarter turn onto the end of the fuel filler tube. Its purpose is to retain vapors and fuel in the fuel tank.

OPERATION

The loss of any fuel or vapor out of the filler tube neck is prevented by the use of a safety filler cap. The cap releases only under significant pressure 17 kPa (2.5 psi). The vacuum relief for all gas caps is between -2.0 and -3.0 kPa (-.29 and -.43 psi). The cap must be replaced by a similar unit in order for the system to remain effective.

WARNING: REMOVE FUEL FILLER TUBE CAP TO RELIEVE TANK PRESSURE BEFORE REMOVING OR REPAIRING FUEL SYSTEM COMPONENTS.

NOTE: THE MALFUNCTION INDICATOR LAMP COULD BE TURNED ON IF THE FUEL FILLER CAP IS LOOSE OR MISSING.

ONBOARD REFUELING VAPOR RECOVERY (ORVR)

DESCRIPTION

ORVR System Schematic and components.

OPERATION

The emission control principle used in the ORVR system is that the fuel flowing into the filler tube (appx. 1” I.D.) creates an aspiration effect which draws air into the fill tube (Fig. 7). During refueling, the fuel tank is vented to the vapor canister to capture escaping vapors. With air flowing into the filler tube, there are no fuel vapors escaping to the atmosphere. Once the refueling vapors are captured by the canister, the vehicle’s computer controlled purge system draws vapor out of the canister for the engine to burn. The vapors flow is metered by the purge solenoid so that there is no or minimal impact on driveability or tailpipe emissions.

As fuel starts to flow through the fill tube, it opens the normally closed check valve and enters the fuel tank. Vapor or air is expelled from the tank through the control valve to the vapor canister. Vapor is absorbed in the canister until vapor flow in the lines stops, either following shut-off or by having the fuel level in the tank rise high enough to close the control valve. The control valve contains a float that rises to seal the large diameter vent path to the canister. At this point in the fueling of the vehicle, the tank pressure increase, the check valve closes (preventing tank fuel from spiting back at the operator), and fuel then rises up the filler tube to shut-off the dispensing nozzle.

If the engine is shut-off while the On-Board diagnostics test is running, low level tank pressure can be trapped in the fuel tank and fuel can not be added to the tank until the pressure is relieved. This is due to the leak detection pump closing the vapor outlet from the top of the tank and the one-way check valve not allowing the tank to vent through the fill tube to atmosphere. Therefore, when fuel is added, it will back-up in the fill tube and shut off the dispensing nozzle. The pressure can be eliminated in two ways:

DESCRIPTION AND OPERATION (Continued)

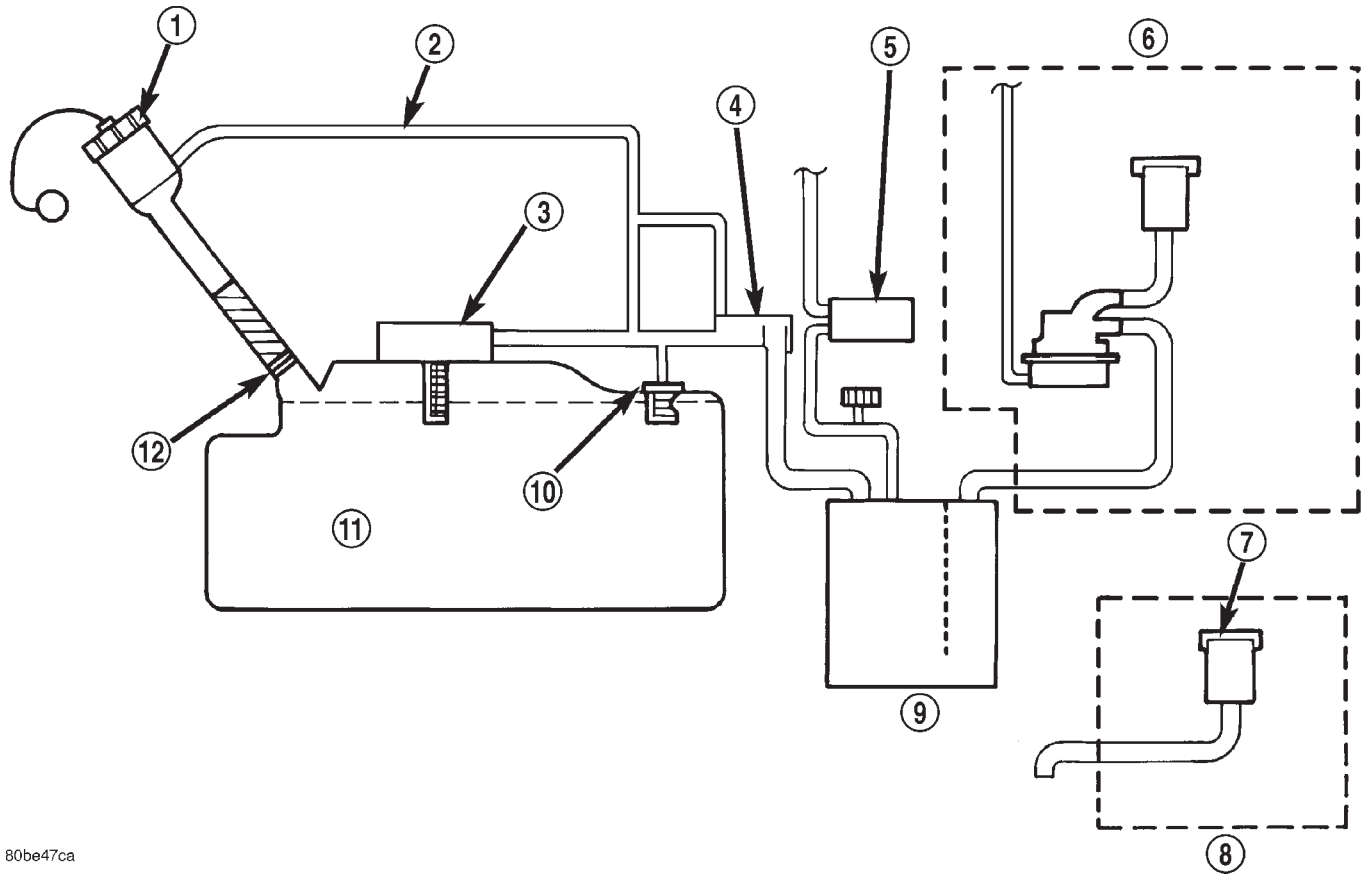

Fig. 7 ORVR System Schematic

1 – FUEL CAP
2 – RECIRCULATION TUBE
3 – CONTROL VALVE
4 – FLOW MANAGEMENT VALVE
5 – PURGE
6 – W/LDP
7 – BREATHER ELEMENT
8 – W/O LDP
9 – CANISTER
10 – ROLLOVER VALVE
11 – FUEL TANK
12 – CHECK VALVE

1. Vehicle purge must be activated and for a long enough period to eliminate the pressure. 2. Removing the fuel cap and allowing enough time for the system to vent thru the recirulation tube.

FLOW MANAGEMENT VALVE

DESCRIPTION

It is a plastic valve inline between the fuel tank and the EVAP canister (Fig. 8).

OPERATION

The flow management valve meters the flow of fuel vapors to the EVAP canister during vehicle run and refueling. Pressure from the tank during refueling opens the main port valve and allows vapors to the EVAP canister. During vehicle run the vapors are metered through an orifice to the EVAP canister. It also is a liquid separator to keep fuel out of the EVAP canister.

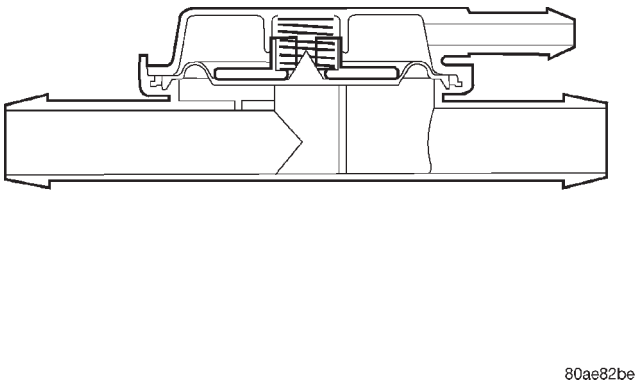

Fig. 8 Flow Management Valve

DESCRIPTION AND OPERATION (Continued)

VEHICLE DOES NOT FILL

Pre-Mature Nozzle Shut-Off.	Defective fuel tank assembly components.	Fill tube improperly installed (sump).
		Fill tube hose pinched.
		Check valve stuck shut.
		Control valve stuck shut.
		Flow Management Valve improperly installed
	Defective vapor/vent components or Recirculation tube pinched or plugged	Vent line from control valve to canister pinched
		Vent line from canister to vent filter pinched.
		Canister vent valve failure (Requires double failure, plugged to LDP and atmosphere).
		Leak detection pump failed closed.
		Leak detection pump filter plugged.
	On-Board diagnostics evaporative system leak test just conducted.	Canister vent valve vent plugged to atmosphere.
		Engine still running when attempting to fill (System designed not to fill).
	Defective fill nozzle.	
Fuel Spits Out Of Filler Tube.	During fill.	See Pre-Mature Shut-Off
	At conclusion of fill.	Defective fuel handling component. (Check valve stuck open).
		Defective vapor/vent handling component
		Defective fill nozzle

ROLLOVER VALVES

DESCRIPTION

All vehicles have rollover valve(s) on top of the fuel tank.

OPERATION

The valves prevent fuel flow through the fuel tank vent valve hoses should the vehicle rollover.

The rollover valves on the fuel tank are not serviceable.

QUICK-CONNECT FITTINGS

DESCRIPTION

Different types of quick-connect fittings are used to attach various fuel system components. These are: a single-tab type, a two-tab type or a plastic retainer ring type. Some are equipped with safety latch clips. Refer to the Service Procedures section for more information.

CAUTION: The interior components (o-rings, spacers) of quick-connect fitting are not serviced separately. Do not attempt to repair damaged fittings or fuel lines/tubes. If repair is necessary, replace the complete fuel tube assembly.

Fuel tubes connect fuel system components with plastic quick-connect fuel fittings. The fitting contains non-serviceable O-ring seals (Fig. 9).

CAUTION: Quick-connect fittings are not serviced separately. Do not attempt to repair damaged quick-connect fittings or fuel tubes. Replace the complete fuel tube/quick-connect fitting assembly.

OPERATION

The quick-connect fitting consists of the O-rings, retainer and casing (Fig. 9). When the fuel tube enters the fitting, the retainer locks the shoulder of the nipple in place and the O-rings seal the tube.

FUEL TUBES/LINES/HOSES AND CLAMPS

DESCRIPTION

Also refer to Quick-Connect Fittings.

WARNING: THE FUEL SYSTEM IS UNDER A CONSTANT PRESSURE (EVEN WITH THE ENGINE OFF). BEFORE SERVICING ANY FUEL SYSTEM HOSES, FITTINGS OR LINES, THE FUEL SYSTEM PRESSURE MUST BE RELEASED. REFER TO THE FUEL SYSTEM PRESSURE RELEASE PROCEDURE IN THIS GROUP.

DESCRIPTION AND OPERATION (Continued)

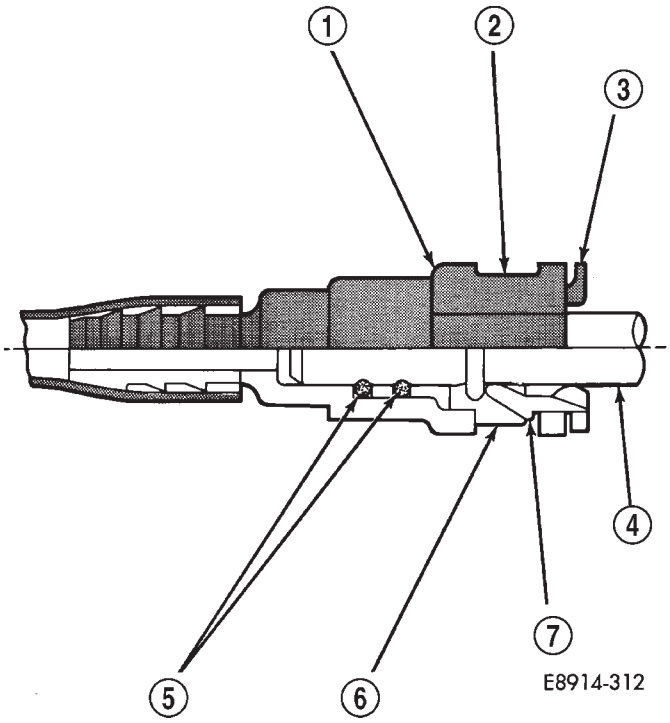

Fig. 9 Typical Plastic Quick-Connect Fittings

1 – CASING
2 – WINDOW
3 – RETAINER TAB
4 – NIPPLE
5 – O RINGS
6 – WINDOW
7 – RETAINER "EAR"

The lines/tubes/hoses used on fuel injected vehicles are of a special construction. This is due to the higher fuel pressures and the possibility of contaminated fuel in this system. If it is necessary to replace these lines/tubes/hoses, only those marked EFM/EFI may be used.

If equipped: The hose clamps used to secure rubber hoses on fuel injected vehicles are of a special rolled edge construction. This construction is used to prevent the edge of the clamp from cutting into the hose. Only these rolled edge type clamps may be used in this system. All other types of clamps may cut into the hoses and cause high-pressure fuel leaks.

Use new original equipment type hose clamps.

SERVICE PROCEDURES

FUEL SYSTEM PRESSURE RELEASE PROCEDURE

(1) Remove Fuel Pump relay from Power Distribution Center (PDC). For location of relay, refer to label on underside of PDC cover.

(2) Start and run engine until it stalls.

(3) Attempt restarting engine until it will no longer run.

(4) Turn ignition key to OFF position.

CAUTION: Steps 1, 2, 3 and 4 must be performed to relieve high pressure fuel from within fuel rail.

(5) Place a rag or towel below fuel line quick-connect fitting at fuel rail.

(6) Return fuel pump relay to PDC.

(7) One or more Diagnostic Trouble Codes (DTC's) may have been stored in PCM memory due to fuel pump relay removal. The DRB III® scan tool must be used to erase a DTC.

FUEL PUMP REPLACEMENT

The electric fuel pump is not serviceable. If the fuel pump or electrical wiring harness needs replacement, the complete fuel pump module must be replaced. Perform the Fuel System Pressure Release procedure before servicing the fuel pump.

FUEL TANK DRAINING

(1) Remove fuel cap slowly to release tank pressure.

(2) With vehicle on a hoist, drain fuel from tank.

(3) Position a fuel approved container, with a capacity of at least 16 gallons, under the drain cap located on the right rear of the tank.

(4) Remove drain cap to allow draining of fuel (Fig. 10).

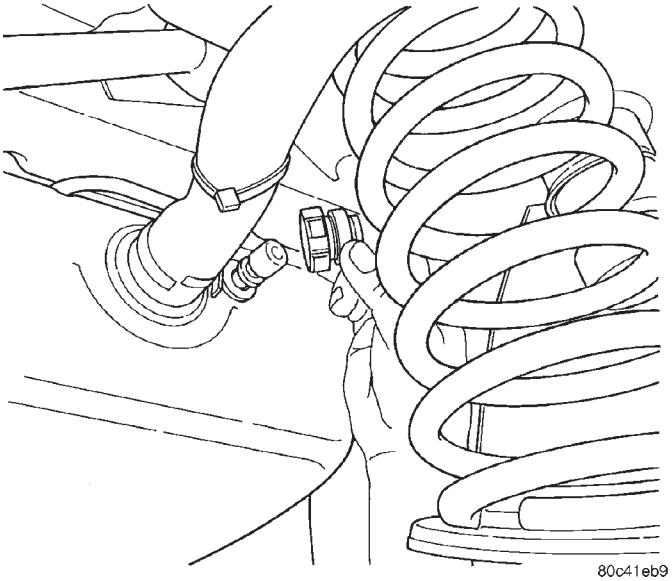

Fig. 10 Fuel Tank Drain Cap

(5) When tank is empty, install the drain cap.

SERVICE PROCEDURES (Continued)

QUICK-CONNECT FITTINGS

REMOVAL

When disconnecting a quick-connect fitting, the retainer will remain on the fuel tube nipple.

WARNING: RELEASE FUEL SYSTEM PRESSURE BEFORE DISCONNECTING A QUICK-CONNECT FITTINGS. REFER TO THE FUEL PRESSURE RELEASE PROCEDURE.

(1) Perform Fuel Pressure Release Procedure. Refer to the Fuel Pressure Release Procedure in this section.

(2) Disconnect negative cable from battery or auxiliary jumper terminal.

(3) Squeeze retainer tabs together and pull fuel tube/quick-connect fitting assembly off of fuel tube nipple. The retainer will remain on fuel tube.

INSTALLATION

CAUTION: Never install a quick-connect fitting without the retainer being either on the fuel tube or already in the quick-connect fitting. In either case, ensure the retainer locks securely into the quick-connect fitting by firmly pulling on fuel tube and fitting to ensure it is secured.

(1) Using a clean lint free cloth, clean the fuel tube nipple and retainer.

(2) Prior to connecting the fitting to the fuel tube, coat the fuel tube nipple with clean 30 weight engine oil.

(3) Push the quick-connect fitting over the fuel tube until the **retainer seats and a click is heard.**

(4) The plastic quick-connect fitting has windows in the sides of the casing. When the fitting completely attaches to the fuel tube, the retainer locking ears and the fuel tube shoulder are visible in the windows. If they are not visible, the retainer was not properly installed (Fig. 11). **Do not rely upon the audible click to confirm a secure connection.**

(5) Connect negative cable to battery or auxiliary jumper terminal.

CAUTION: When using the ASD Fuel System Test, the Auto Shutdown (ASD) Relay remains energized for several minutes, until the test is stopped, or until the ignition switch is turned to the Off position.

(6) Use the DRB scan tool ASD Fuel System Test to pressurize the fuel system. Check for leaks.

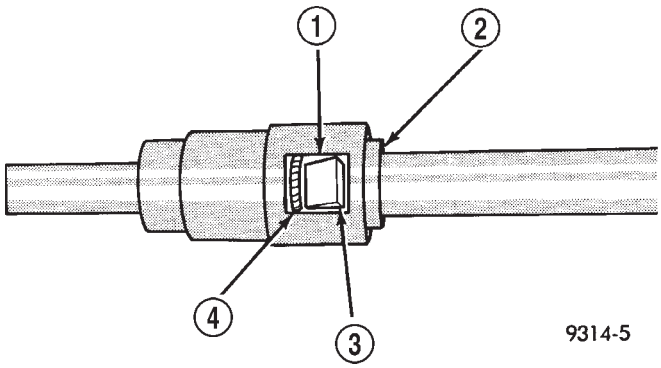

Fig. 11 Plastic Quick-Connect Fitting/Fuel Tube Connection

1 – WINDOW
2 – TAB (2)
3 – EAR
4 – SHOULDER (ON TUBE)

TWO-TAB TYPE FITTING

This type of fitting is equipped with tabs located on both sides of the fitting (Fig. 12). These tabs are supplied for disconnecting the quick-connect fitting from the component being serviced.

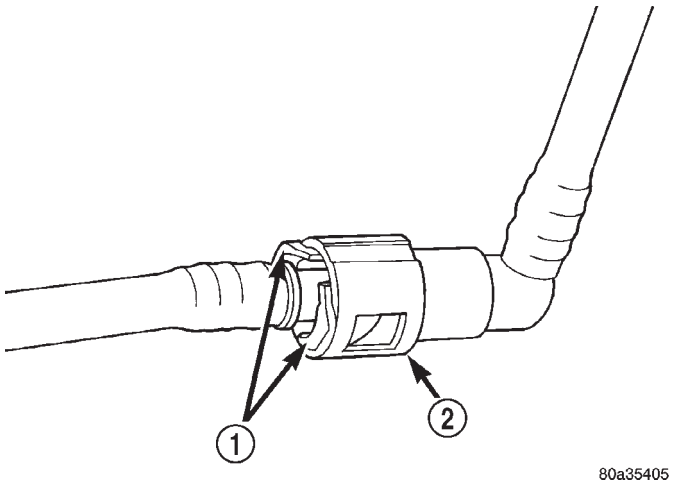

Fig. 12 Typical Two-Tab Type Quick-Connect Fitting

1 – TAB(S)
2 – QUICK-CONNECT FITTING

CAUTION: The interior components (O-rings, spacers) of this type of quick-connect fitting are not serviced separately, but new plastic retainers are available. Do not attempt to repair damaged fittings or fuel lines/tubes. If repair is necessary, replace the complete fuel tube assembly.

SERVICE PROCEDURES (Continued)

WARNING: THE FUEL SYSTEM IS UNDER A CONSTANT PRESSURE (EVEN WITH THE ENGINE OFF). BEFORE SERVICING ANY FUEL SYSTEM HOSES, FITTINGS OR LINES, THE FUEL SYSTEM PRESSURE MUST BE RELEASED. REFER TO THE FUEL PRESSURE RELEASE PROCEDURE IN THIS GROUP.

DISCONNECTION/CONNECTION

(1) Perform fuel pressure release procedure. Refer to Fuel Pressure Release Procedure in this group.

(2) Disconnect negative battery cable from battery or auxiliary jumper terminal.

(3) Clean fitting of any foreign material before disassembly.

(4) To disconnect quick-connect fitting, squeeze plastic retainer tabs (Fig. 12) against sides of quick-connect fitting with your fingers. Tool use is not required for removal and may damage plastic retainer. Pull fitting from fuel system component being serviced. The plastic retainer will remain on component being serviced after fitting is disconnected. The O-rings and spacer will remain in quick-connect fitting connector body.

(5) Inspect quick-connect fitting body and component for damage. Replace as necessary.

CAUTION: When the quick-connect fitting was disconnected, the plastic retainer will remain on the component being serviced. If this retainer must be removed, very carefully release the retainer from the component with two small screwdrivers. After removal, inspect the retainer for cracks or any damage.

(6) Prior to connecting quick-connect fitting to component being serviced, check condition of fitting and component. Clean parts with a lint-free cloth. Lubricate with clean engine oil.

(7) Insert quick-connect fitting to component being serviced and into plastic retainer. When a connection is made, a click will be heard.

(8) Verify a locked condition by firmly pulling on fuel tube and fitting (15-30 lbs.).

(9) Connect negative cable to battery or auxiliary jumper terminal.

(10) Use the DRB scan tool ASD Fuel System Test to pressurize the fuel system. Check for leaks.

PLASTIC RETAINER RING TYPE FITTING

This type of fitting can be identified by the use of a full-round plastic retainer ring (Fig. 13) usually black in color.

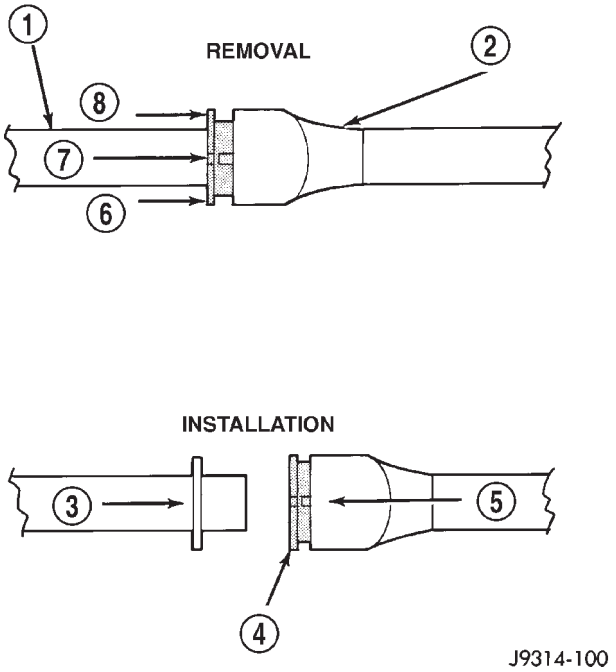

Fig. 13 Plastic Retainer Ring Type Fitting

1 – FUEL TUBE
2 – QUICK CONNECT FITTING
3 – PUSH
4 – PLASTIC RETAINER
5 – PUSH
6 – PUSH
7 – PUSH
8 – PUSH

CAUTION: The interior components (O-rings, spacers, retainers) of this type of quick-connect fitting are not serviced separately. Do not attempt to repair damaged fittings or fuel lines/tubes. If repair is necessary, replace the complete fuel tube assembly.

WARNING: THE FUEL SYSTEM IS UNDER A CONSTANT PRESSURE (EVEN WITH THE ENGINE OFF). BEFORE SERVICING ANY FUEL SYSTEM HOSES, FITTINGS OR LINES, THE FUEL SYSTEM PRESSURE MUST BE RELEASED. REFER TO THE FUEL SYSTEM PRESSURE RELEASE PROCEDURE IN THIS GROUP.

DISCONNECTION/CONNECTION

(1) Perform fuel pressure release procedure. Refer to Fuel Pressure Release Procedure in this section.

(2) Disconnect negative battery cable from battery or auxiliary jumper terminal.

(3) Clean fitting of any foreign material before disassembly.

SERVICE PROCEDURES (Continued)

(4) To release fuel system component from quick-connect fitting, firmly push fitting towards component being serviced while firmly pushing plastic retainer ring into fitting (Fig. 13). With plastic ring depressed, pull fitting from component. **The plastic retainer ring must be pressed squarely into fitting body. If this retainer is cocked during removal, it may be difficult to disconnect fitting. Use an open-end wrench on shoulder of plastic retainer ring to aid in disconnection.**

(5) After disconnection, plastic retainer ring will remain with quick-connect fitting connector body.

(6) Inspect fitting connector body, plastic retainer ring and fuel system component for damage. Replace as necessary.

(7) Prior to connecting quick-connect fitting to component being serviced, check condition of fitting and component. Clean parts with a lint-free cloth. Lubricate with clean engine oil.

(8) Insert quick-connect fitting into component being serviced until a click is felt.

(9) Verify a locked condition by firmly pulling on fuel tube and fitting (15-30 lbs.).

(10) Connect negative battery cable to battery or auxiliary jumper terminal.

(11) Use the DRB scan tool ASD Fuel System Test to pressurize the fuel system. Check for leaks.

HOSES AND CLAMPS

Inspect all hose connections (clamps and quick connect fittings) for completeness and leaks. Replace cracked, scuffed, or swelled hoses. Replace hoses that rub against other vehicle components or show sign of wear.

Fuel injected vehicles use specially constructed hoses. When replacing hoses, only use hoses marked EFM/EFI.

When installing hoses, ensure that they are routed away from contact with other vehicle components that could rub against them and cause failure. Avoid contact with clamps or other components that cause abrasions or scuffing. Ensure that rubber hoses are properly routed and avoid heat sources.

The hose clamps have rolled edges to prevent the clamp from cutting into the hose. Only use clamps that are original equipment or equivalent. Other types of clamps may cut into the hoses and cause high pressure fuel leaks. Tighten hose clamps to 1 N·m (10 in. lbs.) torque.

Inspect all hose connections such as clamps, couplings and fittings to make sure they are secure and leaks are not present. The component should be replaced immediately if there is any evidence of degradation that could result in failure.

Never attempt to repair a plastic fuel line/tube. Replace as necessary.

Avoid contact of any fuel tubes/hoses with other vehicle components that could cause abrasions or scuffing. Be sure that the plastic fuel lines/tubes are properly routed to prevent pinching and to avoid heat sources.

REMOVAL AND INSTALLATION

AUTOMATIC SHUTDOWN RELAY

The relay is located in the Power Distribution Center (PDC) (Fig. 14). For the location of the relay within the PDC, refer to the PDC cover for location. Check electrical terminals for corrosion and repair as necessary.

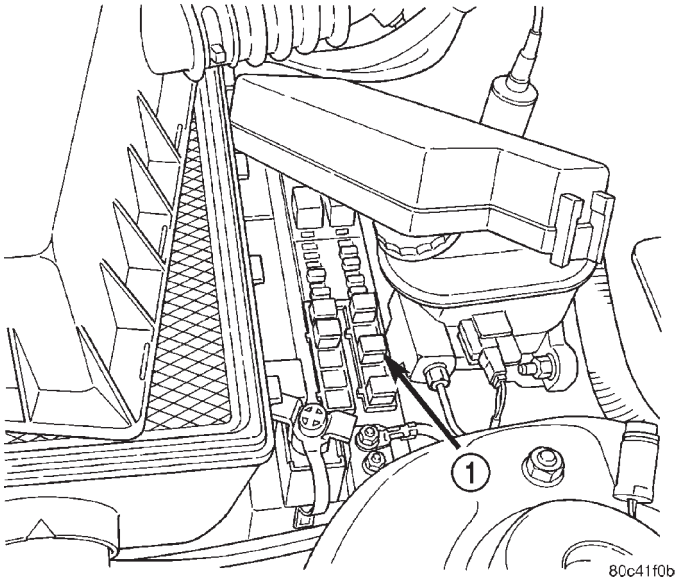

Fig. 14 Power Distribution Center (PDC)

1 – PDC

FUEL PUMP RELAY

The fuel pump relay is located in the PDC (Fig. 14). The inside top of the PDC cover has a label showing relay and fuse location. Check electrical terminals for corrosion and repair as necessary.

FUEL TANK

WARNING: RELEASE FUEL SYSTEM PRESSURE BEFORE SERVICING FUEL SYSTEM COMPONENTS. SERVICE VEHICLES IN WELL VENTILATED AREAS AND AVOID IGNITION SOURCES. NEVER SMOKE WHILE SERVICING THE VEHICLE.

REMOVAL

(1) Release fuel system pressure. Refer to Fuel Pressure Release Procedure in this section.

REMOVAL AND INSTALLATION (Continued)

(2) Remove the air cleaner lid, disconnect the inlet air temperature sensor and makeup air hose.
(3) Remove the negative battery cable.
(4) Remove fuel cap slowly to release tank pressure.
(5) Raise and support the vehicle.
(6) With vehicle on a hoist, drain fuel from tank. Support fuel tank with a support such as a transmission jack stand.
(7) Position a fuel approved container, with a capacity of at least 16 gallons, under the drain cap located on the rear of the tank next to the fuel filler tube.
(8) Remove drain cap and allow fuel to drain (Fig. 15).
(9) Drain fuel tank refer to Draining the Fuel Tank in this section.

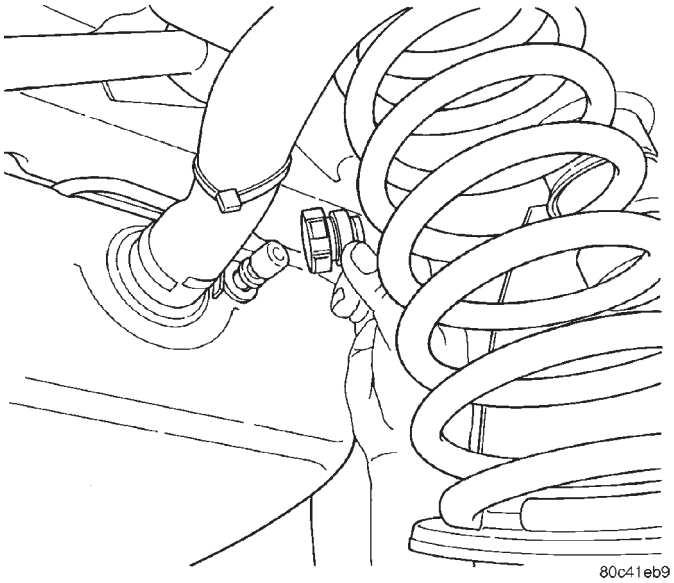

Fig. 15 Fuel Tank Drain Cap

(10) When tank is done draining, install drain cap.

WARNING: There may be fuel in the fill tube. Remove hose carefully to reduce fuel splash.

(11) Disconnect fuel tank from rubber fill hose.

WARNING: WRAP SHOP TOWELS AROUND HOSES TO CATCH ANY GASOLINE SPILLAGE.

(12) Remove bolts from the fuel tank straps (Fig. 16).
(13) Lower fuel tank and remove the EVAP line and recirculation line.
(14) Remove vacuum line from LDP.
(15) Disconnect fuel line, it is in the front of the fuel tank. This is a quick connect fittings (Fig. 17).
(16) Unlock the electrical connector then disconnect the electrical connector (Fig. 18)

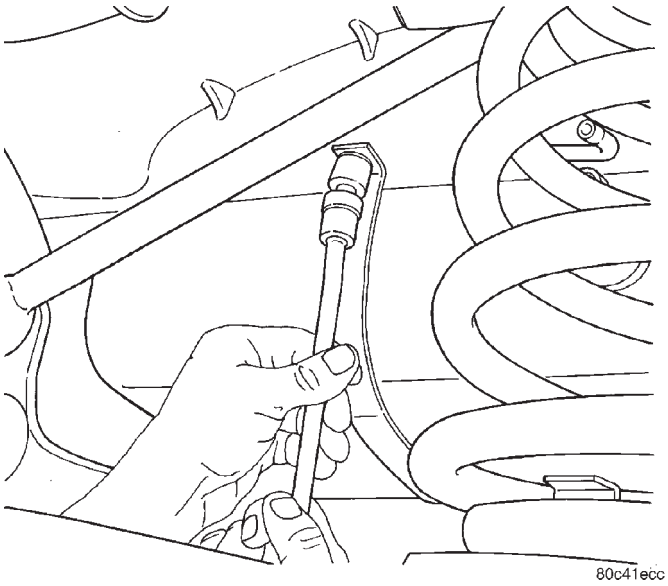

Fig. 16 Fuel Tank Straps

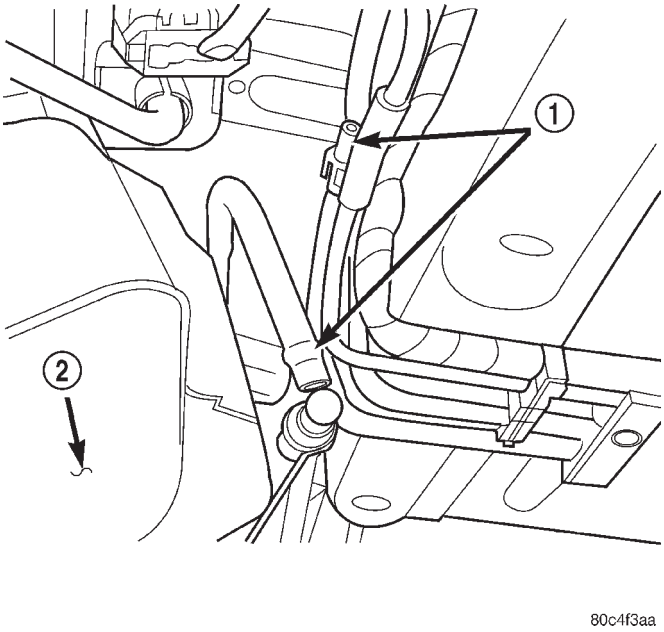

Fig. 17 Fuel Line

1 – FUEL LINE
2 – FUEL TANK

(17) Remove hoses from EVAP canister.
(18) Remove fuel tank from vehicle.

INSTALLATION

(1) Position fuel tank on transmission jack.
(2) Raise fuel tank into position.
(3) Connect vacuum line to LDP.
(4) Install EVAP line and recirculation line.
(5) Connect electrical connector (Fig. 18) and lock the connector.

REMOVAL AND INSTALLATION (Continued)

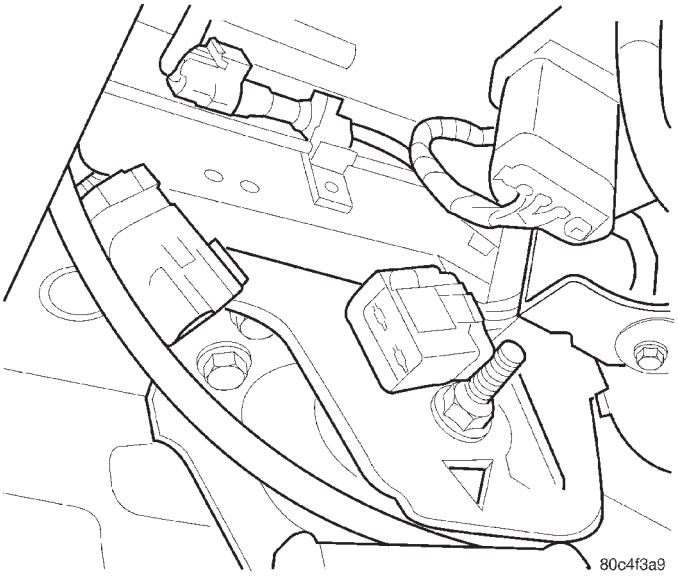

Fig. 18 Electrical Connector

(6) Connect the fuel line (Fig. 17). Refer to Quick Connect Fittings in this section.

(7) Connect fuel fill tube to tank inlet. Tighten hose clamp to 3.5 N·m (31 in. lbs.) torque.

(8) Position fuel tank straps. Tighten fuel tank strap bolts to 23 N·m (250 in. lbs.) torque (Fig. 16). Remove transmission jack. Ensure straps are not twisted or bent.

(9) Lower vehicle.

(10) Fill fuel tank, install filler cap.

(11) Install the negative battery cable.

(12) Install the air cleaner lid, connect the inlet air temperature sensor and makeup air hose.

(13) Use the DRB scan tool ASD Fuel System Test to pressurize the fuel system. Check for leaks.

FUEL PUMP MODULE

WARNING: RELEASE FUEL SYSTEM PRESSURE BEFORE SERVICING FUEL SYSTEM COMPONENTS. SERVICE VEHICLES IN WELL VENTILATED AREAS AND AVOID IGNITION SOURCES. NEVER SMOKE WHILE SERVICING THE VEHICLE.

REMOVAL

(1) Remove fuel filler cap and perform Fuel System Pressure Release procedure.

(2) Remove the air cleaner lid, disconnect the inlet air temperature sensor and makeup air hose.

(3) Remove the negative battery cable.

(4) Raise vehicle and support.

(5) Remove fuel tank, refer to the Fuel Tank Removal in this section.

(6) Clean top of tank to remove loose dirt and debris.

(7) Disconnect fuel filter lines from fuel pump module.

(8) Using Special Tool #6856 Fuel Pump Module Ring Spanner, remove locknut to release pump module (Fig. 19).

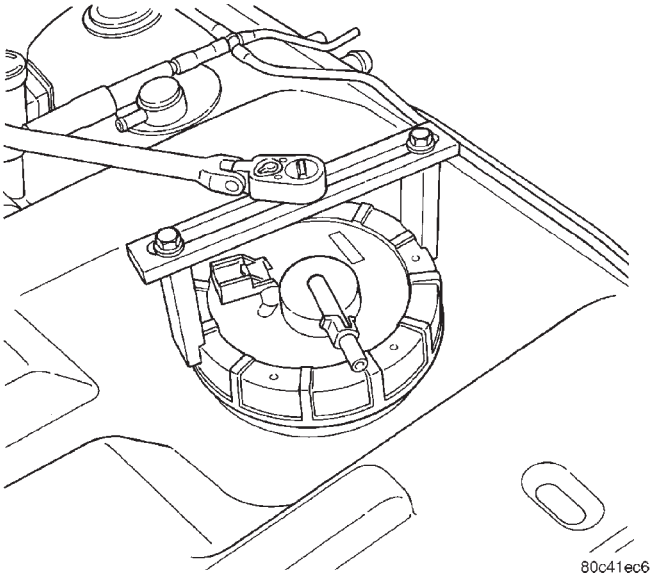

Fig. 19 Fuel Pump Module Locknut

WARNING: THE FUEL RESERVOIR OF THE FUEL PUMP MODULE DOES NOT EMPTY OUT WHEN THE TANK IS DRAINED. THE FUEL IN THE RESERVOIR MAY SPILL OUT WHEN THE MODULE IS REMOVED.

(9) Remove fuel pump module and seal from tank. Discard seal.

INSTALLATION

(1) Wipe seal area of tank clean. Place a new seal between the tank threads and the pump module opening.

(2) Position fuel pump module in tank. Make sure the alignment tab on the underside of the pump module flange sits in the corresponding notch in the fuel tank.

CAUTION: Over tightening the pump lock ring may result in a leak.

(3) While holding the pump module in position, install locknut. Tighten locknut to 74.5 N·m (55 ft. lbs) torque using special tool #6856.

(4) Install fuel tank, refer to the Fuel Tank Installation in this section.

(5) Lower vehicle.

(6) Install the negative battery cable.

(7) Install the air cleaner lid, connect the inlet air temperature sensor and makeup air hose.

(8) Fill fuel tank with clean fuel. Use the DRB scan tool to pressurize the system and check for leaks.

REMOVAL AND INSTALLATION (Continued)

FUEL LEVEL SENSOR

REMOVAL

(1) Remove fuel pump module. Refer to Fuel Pump Module in this section.

(2) Depress retaining tab and remove the fuel pump/level sensor connector from the **BOTTOM** of the fuel pump module electrical connector (Fig. 20).

NOTE: The pump module harness on TOP of flange is not serviceable or removable.

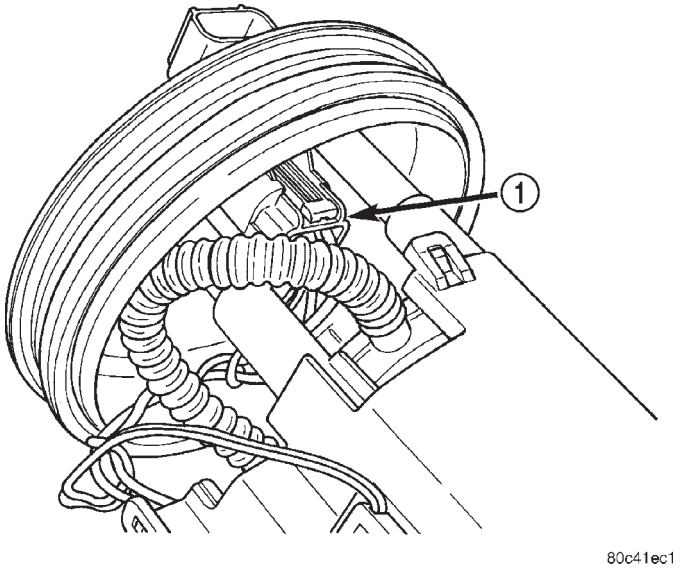

Fig. 20 Fuel Pump/Level Sensor Electrical Connector

1 – ELECTRICAL CONNECTOR

(3) Remove the wedge lock from the electrical connector (Fig. 21).

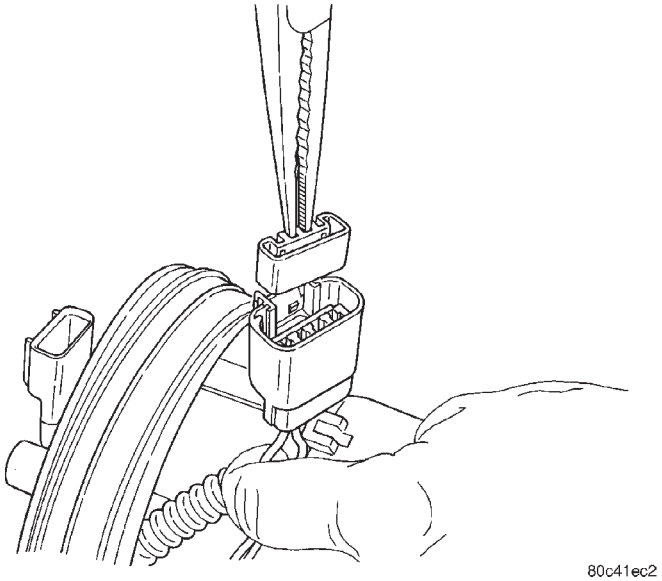

Fig. 21 Wedge Lock

(4) Using Special Tool C-4334 terminal remover or equivalent, remove terminals from level sensor connector (Fig. 22).

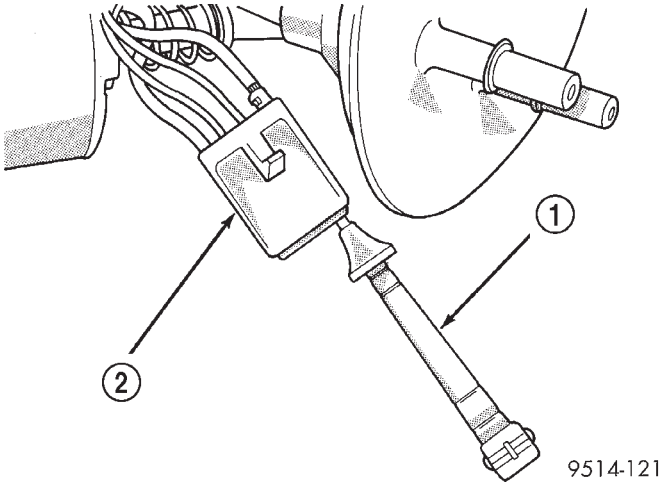

Fig. 22 Terminal Removal Tool-Tyipcal

1 – TERMINAL REMOVAL TOOL
2 – FUEL LEVEL SENSOR CONNECTOR

(5) Depress the tab and slide the sensor toward the bottom of the fuel pump module (Fig. 23).

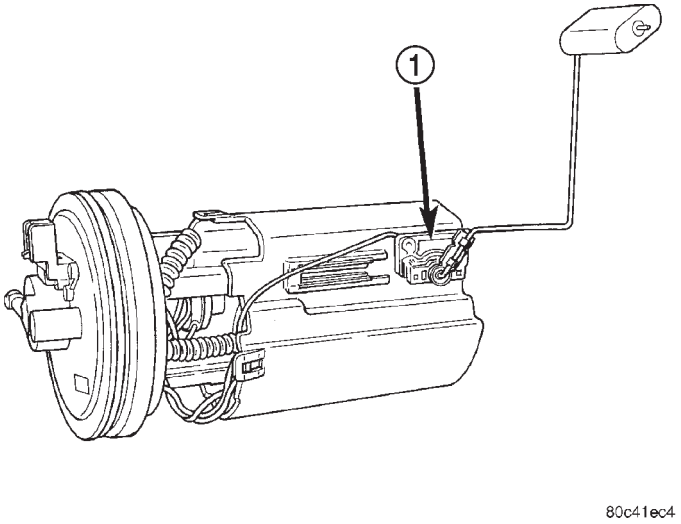

Fig. 23 Level Sensor Removal/Installation

1 – FUEL LEVER SENSOR

(6) Slide level sensor out of channel in module.

INSTALLATION

(1) Wrap wires into groove in back of level sensor (Fig. 24).

(2) While feeding wires into guide grooves, slide level sensor up into channel until it snaps into place (Fig. 23). Ensure tab at bottom of sensor locks in place.

REMOVAL AND INSTALLATION (Continued)

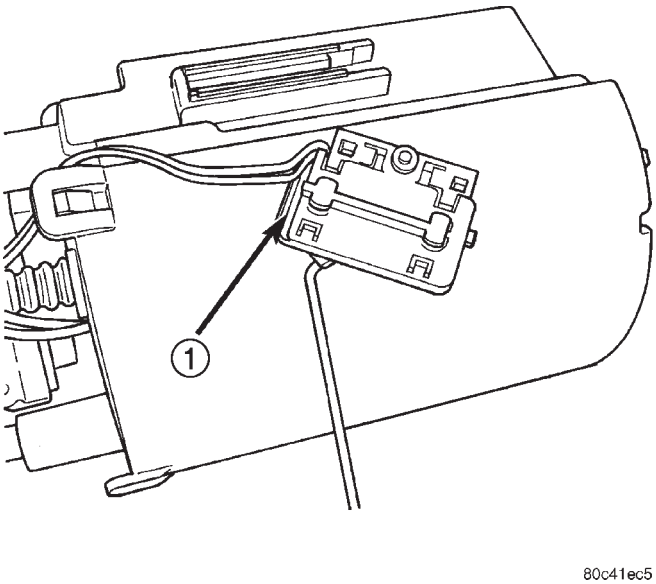

Fig. 24 Groove in Back Side of Level Sensor

1 – WIRING GROOVE

(3) Install level sensor wires in connector. Push the wires up through the connector and then pull them down until they lock in place. Ensure signal and ground wires are installed in the correct position refer to the Wiring section.

(4) Install locking wedge on connector (Fig. 21).

(5) Push connector up into bottom of fuel pump module electrical connector (Fig. 20).

(6) Install fuel pump module. Refer to Fuel Pump Module in this section.

FUEL RAIL—2.4L

REMOVAL

WARNING: RELEASE FUEL SYSTEM PRESSURE BEFORE SERVICING FUEL SYSTEM COMPONENTS. SERVICE VEHICLES IN WELL VENTILATED AREAS AND AVOID IGNITION SOURCES. NEVER SMOKE WHILE SERVICING THE VEHICLE.

(1) Release fuel system pressure. Refer to Fuel System Pressure Release procedure in this section.

(2) Remove the air cleaner lid, disconnect the inlet air temperature sensor and makeup air hose.

(3) Remove the negative battery cable.

(4) Remove the engine cover or throttle control shield if equipped.

WARNING: WRAP SHOP TOWELS AROUND HOSE TO CATCH ANY GASOLINE SPILLAGE.

(5) Disconnect fuel supply tube from rail. Refer to Quick-Connect Fittings in this section.

(6) Remove the Intake Manifold, refer to the Engine section.

(7) Disconnect electrical connectors from fuel injectors (Fig. 25).

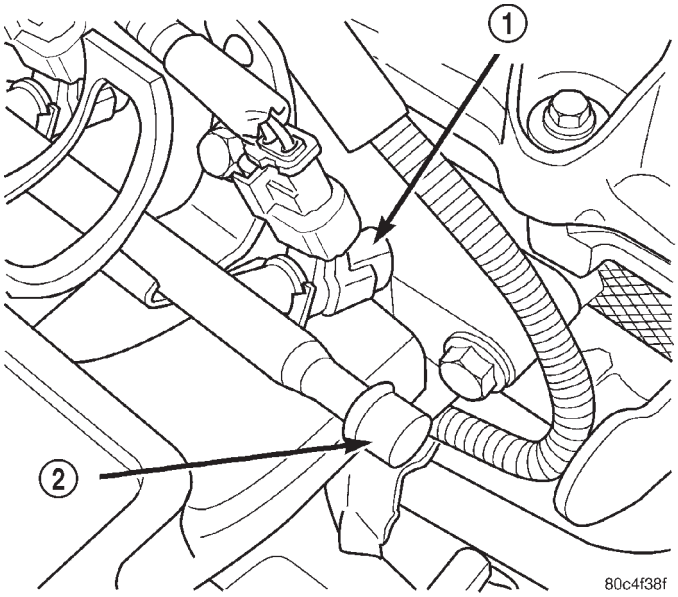

Fig. 25 Fuel Injector

1 – FUEL INJECTOR
2 – FUEL TEST PORT

(8) Remove bolts holding fuel rail (Fig. 26).

(9) Remove the fuel rail and injectors.

(10) Remove the injectors from the fuel rail.

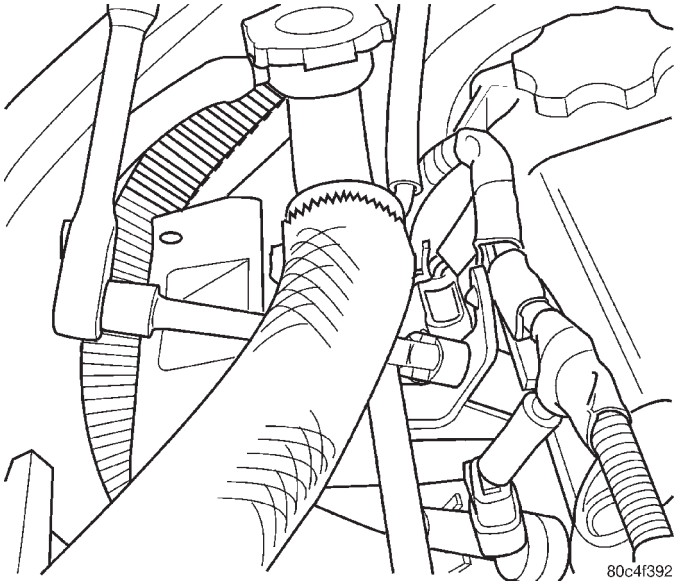

Fig. 26 Fuel Rail

INSTALLATION

(1) Install injectors to the fuel rail.

(2) Apply a light coating of clean engine oil to the O-ring on the nozzle end of each injector.

REMOVAL AND INSTALLATION (Continued)

(3) Insert fuel injector nozzles into openings in intake manifold. Seat the injectors in place. Tighten fuel rail bolts to 23 N·m (17 ft. lbs.) (Fig. 26).
(4) Attach electrical connectors to fuel injectors.
(5) Connect fuel supply tube to fuel rail. Refer to Quick Connect Fittings in the Fuel Delivery section
(6) Install Intake Manifold, refer to the Engine section.
(7) Install the engine cover or throttle control shield if equipped.
(8) Install the negative battery cable.
(9) Install the air cleaner lid, connect the inlet air temperature sensor and makeup air hose. Tighten air inlet tube clamps to 3 N·m ±1 (25 in. lbs. ±5) torque.

FUEL INJECTOR—2.4L

REMOVAL

WARNING: RELEASE FUEL SYSTEM PRESSURE BEFORE SERVICING FUEL SYSTEM COMPONENTS. SERVICE VEHICLES IN WELL VENTILATED AREAS AND AVOID IGNITION SOURCES. NEVER SMOKE WHILE SERVICING THE VEHICLE.

(1) Release fuel system pressure. Refer to Fuel System Pressure Release procedure in this section.
(2) Remove the air cleaner lid, disconnect the inlet air temperature sensor and makeup air hose.
(3) Remove the negative battery cable.
(4) Remove the engine cover or throttle control shield if equipped.

WARNING: WRAP SHOP TOWELS AROUND HOSE TO CATCH ANY GASOLINE SPILLAGE.

(5) Disconnect fuel supply tube from rail. Refer to Quick-Connect Fittings in this section.
(6) Remove the Intake Manifold, refer to the Engine section.
(7) Disconnect electrical connectors from fuel injectors.
(8) Remove bolts holding fuel rail (Fig. 27).
(9) Remove the fuel rail and injectors.
(10) Remove injectors from the fuel rail.

INSTALLATION

(1) Install the fuel injectors to the fuel rail.
(2) Apply a light coating of clean engine oil to the O-ring on the nozzle end of each injector.
(3) Insert fuel injector nozzles into openings in intake manifold. Seat the injectors in place. Tighten fuel rail bolts to 12 N·m (8 ft. lbs.) (Fig. 27).
(4) Attach electrical connectors to fuel injectors.
(5) Connect fuel supply tube to fuel rail. Refer to Quick Connect Fittings in the Fuel Delivery section

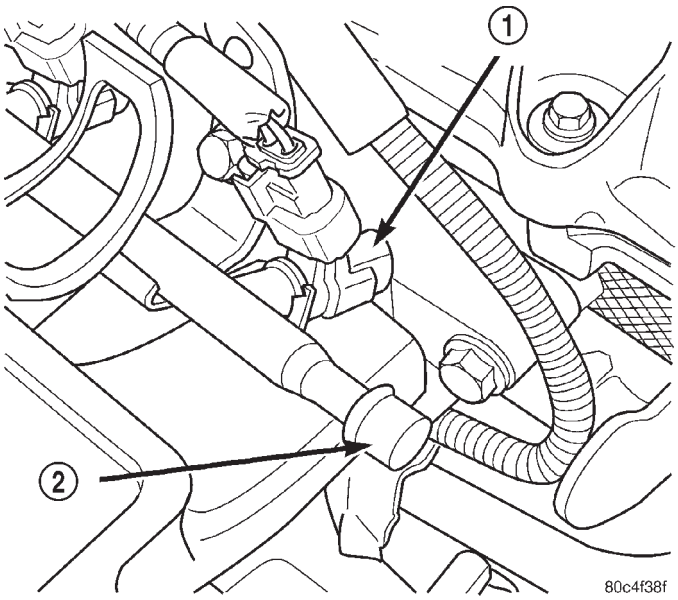

Fig. 27 Fuel Rail
1 – FUEL INJECTOR
2 – FUEL TEST PORT

(6) Install Intake Manifold, refer to the Engine section.
(7) Install the engine cover or throttle control shield if equipped.
(8) Install the negative battery cable.
(9) Install the air cleaner lid, connect the inlet air temperature sensor and makeup air hose. Tighten air inlet tube clamps to 3 N·m ±1 (25 in. lbs. ±5) torque.

FUEL FILLER NECK

REMOVAL

(1) Remove the air cleaner lid and makeup air hose.
(2) Remove the negative battery cable.
(3) Loosen fuel filler tube cap (Fig. 28).
(4) Remove fuel filler neck screws (Fig. 29).
(5) Raise vehicle and support.
(6) Remove the right rear wheel.
(7) Remove the rear half of the inner splash shield (Fig. 30).

NOTE: Drain fuel tank if it is more than half full.

(8) Disconnect fuel filler tube hose from fuel tank neck (Fig. 31). Remove fuel filler tube assembly.

INSTALLATION

(1) Install fuel filler tube. Connect fuel filler tube hose to fuel tank neck and tighten clamp to 4.1 N·m (38 ins. lbs.) (Fig. 31).
(2) Install the rear half of the inner splash shield (Fig. 30).

REMOVAL AND INSTALLATION (Continued)

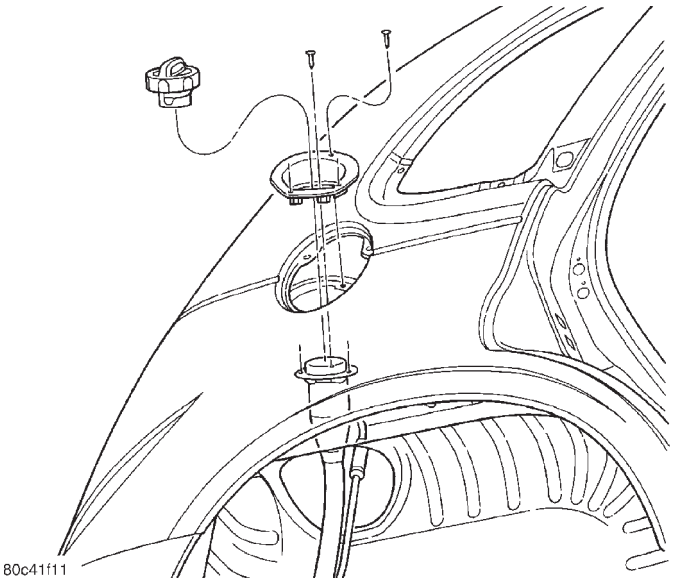

Fig. 28 Fuel Filler Cap

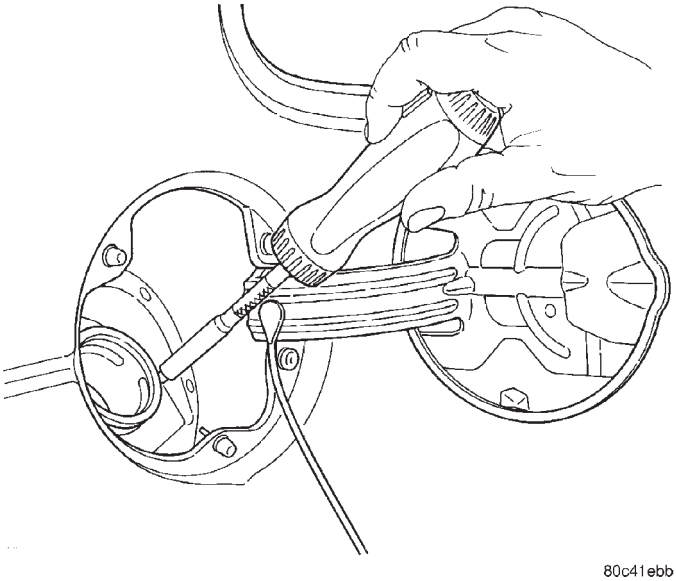

Fig. 29 Fuel Filler Neck Removal/Installation

(3) Lower vehicle.

(4) Install fuel filler neck screws and tighten to 2.7 N·m (24 ins. lbs.) (Fig. 29).

(5) Install fuel filler tube cap.

(6) Install the negative battery cable.

(7) Install the air cleaner lid and makeup air hose.

ACCELERATOR PEDAL

REMOVAL

(1) Remove the throttle cable from the throttle body cam as described in Throttle Cable of this section.

(2) Reach behind the top of the pedal shaft and push the retainer toward rear of vehicle (Fig. 32). It may be necessary to squeeze retainer ears together on dash side of pedal shaft.

(3) Lift cable up through slot in top of pedal shaft.

(4) Remove nuts from accelerator pedal assembly studs. Remove assembly from vehicle.

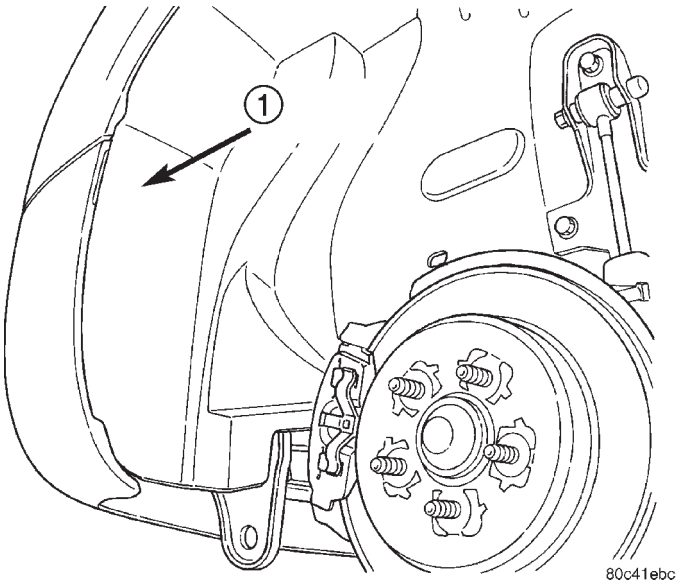

Fig. 30 Slash Shield

1 – SPLASH SHIELD

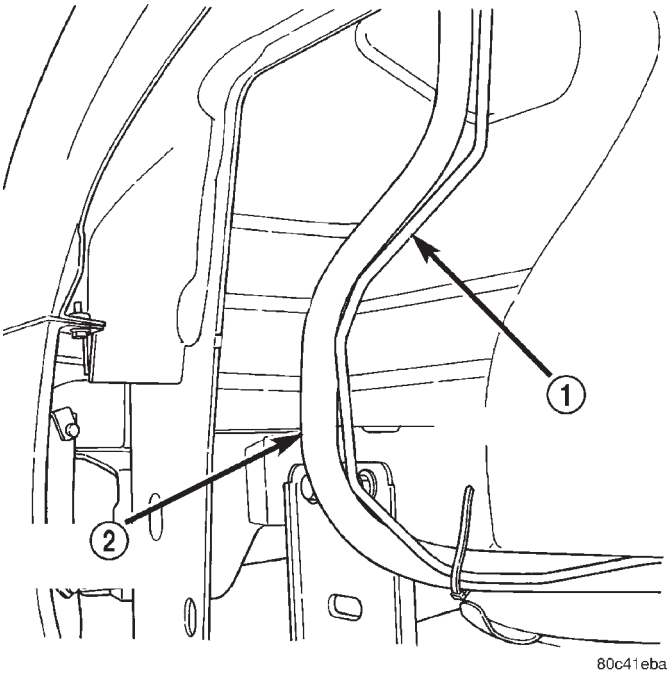

Fig. 31 Filler Tube

1 – VAPOR RECIRCULATION TUBE

2 – FILLER TUBE

REMOVAL AND INSTALLATION (Continued)

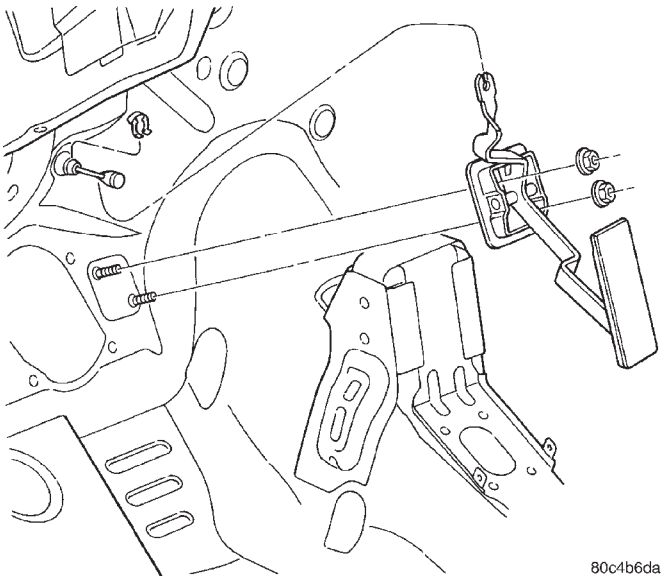

Fig. 32 Accelerator Pedal and Throttle Cable

INSTALLATION

(1) Position accelerator pedal assembly on dash panel. Install retaining nuts. Tighten retaining nuts to 12 N·m (105 in. lbs.) torque.

(2) Place cable through slot in top of pedal shaft.

(3) While holding pedal lever, Push retainer clip forward in vehicle engaging it into the pedal lever.

(4) Hold the throttle body lever in the wide open position and install the throttle cable.

THROTTLE CABLE—2.4L

REMOVAL

(1) Remove the engine cover or throttle control shield if equipped.

(2) Working from the engine compartment, remove the throttle cable from the throttle body lever (Fig. 33).

(3) Lift the retaining tabs on the cable and slide cable out of bracket (Fig. 34).

(4) From inside vehicle, reach behind the top of the pedal shaft and push the retainer toward rear of vehicle. It may be necessary to squeeze retainer ears together on dash side of pedal shaft.

(5) Lift cable up through slot in top of pedal shaft.

(6) Remove throttle cable clip attached at grommet in front of dash panel (Fig. 35).

(7) From the engine compartment, pull the throttle cable and grommet out of the dash panel.

INSTALLATION

(1) From the engine compartment, push the cable end fitting and grommet into the dash panel.

(2) Install throttle cable clip (Fig. 35).

(3) Route the throttle cable (Fig. 36).

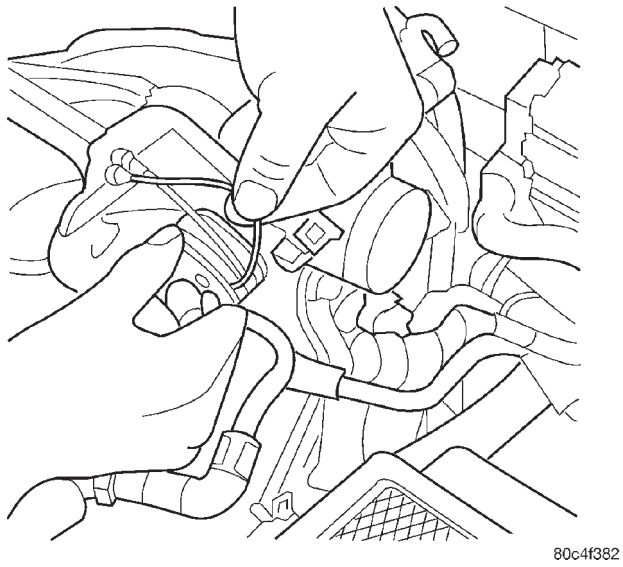

Fig. 33 Throttle Cable Attachment to Throttle Body

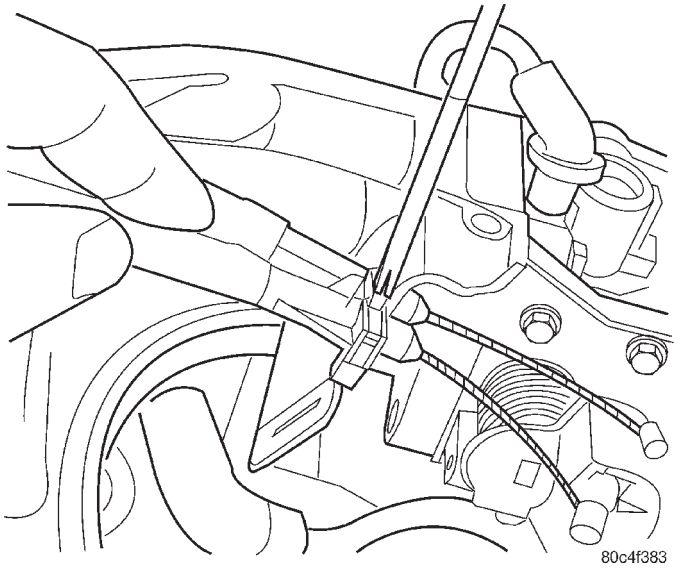

Fig. 34 Disconnecting Throttle Cable

(4) Install cable housing (throttle body end) into the cable mounting bracket on the engine.

(5) Place cable through slot in top of pedal shaft.

(6) While holding the pedal lever, push retainer clip forward in vehicle engaging it into the pedal lever.

(7) From the engine compartment, rotate the throttle lever forward to the wide open position and install cable clasp (Fig. 34).

(8) Install the engine cover or throttle control shield if equipped.

ENGINE COVER

REMOVAL

(1) Grab the cover at the ends and pull straight up.

REMOVAL AND INSTALLATION (Continued)

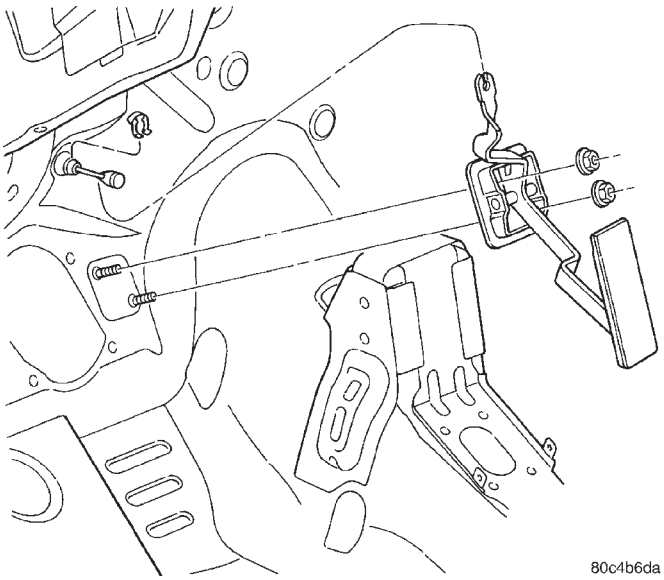

Fig. 35 Throttle Cable Clip

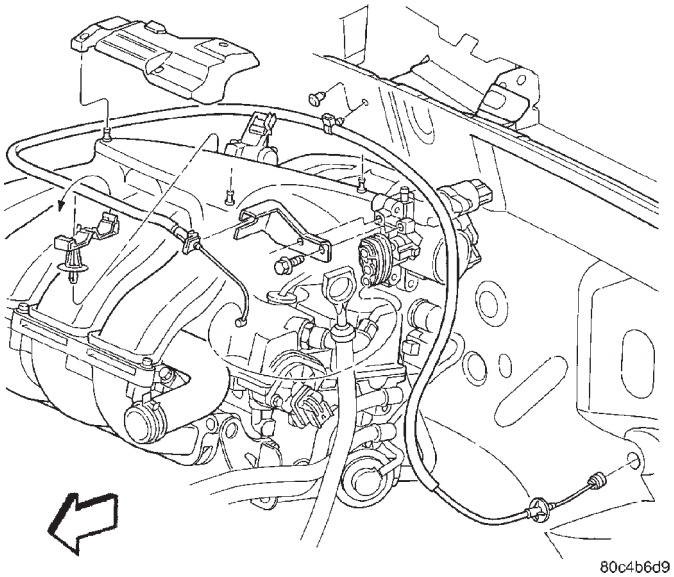

Fig. 36 Cable Routing 2.4L

INSTALLATION

(1) Line up the rubber sockets with the ball stud (Fig. 39).

(2) Push down on cover until all 3 ball studs are seated in the rubber sockets.

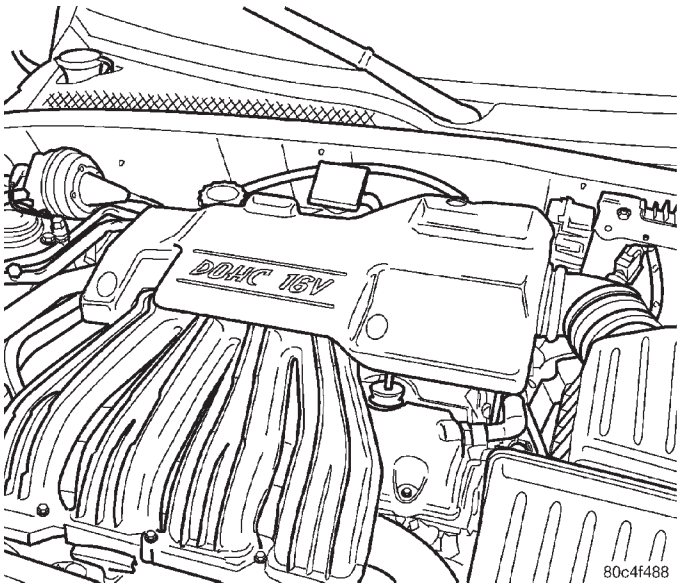

Fig. 37 Engine Cover

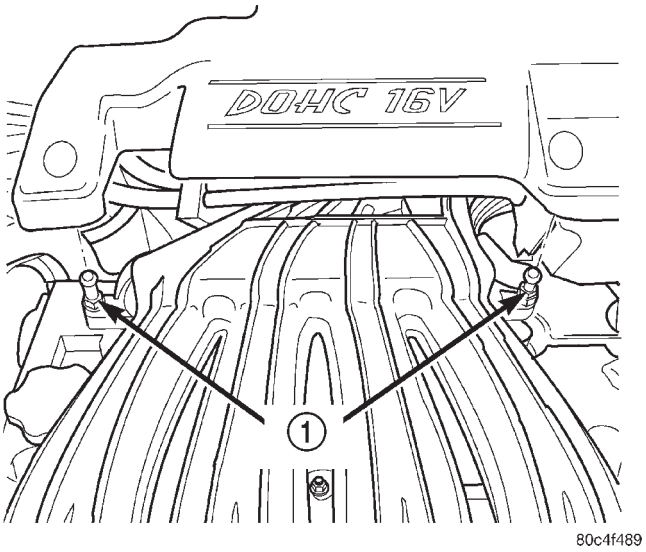

Fig. 38 Ball Studs

1 – BALL STUDS

SPECIFICATIONS

TORQUE

DESCRIPTION	TORQUE
Accelerator Pedal to Dash Nuts	12 N·m (105 in. lbs.)
Fuel Filler Hose Clamp	4.1 N·m (38 ins. lbs.)
Fuel Filler Neck Screws	2.7 N·m (24 ins. lbs.)
Fuel Pump Module Locknut	74.5 N·m (55 ft. lbs.)
Fuel Tank strap Bolts	28.2 N·m (250 in. lbs.)
Fuel Rail Bolts—2.4L	23 N·m (17 ft. lbs.)
Ignition Coil Mounting Bolts	12 N·m (105 in. lbs.)

SPECIFICATIONS (Continued)

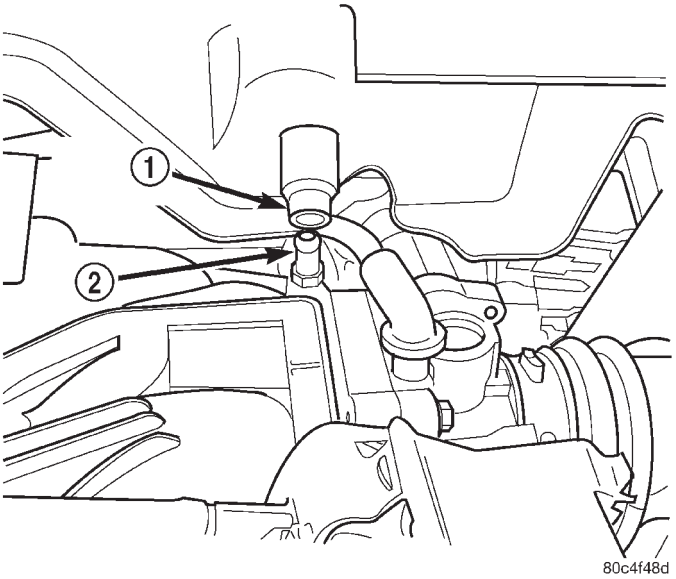

Fig. 39 Ball and Socket

1 – RUBBER SOCKET
2 – BALL STUD

FUEL SYSTEM PRESSURE

400 kpa ±34 kpa (58 psi ± 5 psi)

FUEL TANK CAPACITY

Vehicle	Liters	U.S. Gallons
PT	57	15
Nominal refill capacities are shown. A variation may be observed from vehicle to vehicle due to manufacturing tolerance and refill procedure.		

FUEL REQUIREMENTS

Your engine is designed to meet all emissions regulations and provide excellent fuel economy and performance when using high quality unleaded gasoline having an octane rating of 87. The use of premium gasoline is not recommended. The use of premium gasoline will provide no benefit over high quality regular gasoline, and in some circumstances may result in poorer performance.

Light spark knock at low engine speeds is not harmful to your engine. However, continued heavy spark knock at high speeds can cause damage and immediate service is required. Engine damage resulting from operation with a heavy spark knock may not be covered by the new vehicle warranty.

Poor quality gasoline can cause problems such as hard starting, stalling and hesitations. If you experience these symptoms, try another brand of gasoline before considering service for the vehicle.

Over 40 auto manufacturers world-wide have issued and endorsed consistent gasoline specifications (the Worldwide Fuel Charter, WWFC) to define fuel properties necessary to deliver enhanced emissions, performance and durability for your vehicle. We recommend the use of gasolines that meet the WWFC specifications if they are available.

REFORMULATED GASOLINE

Many areas of the country require the use of cleaner burning gasoline referred to as “reformulated” gasoline. Reformulated gasoline contain oxygenates, and are specifically blended to reduce vehicle emissions and improve air quality.

We strongly supports the use of reformulated gasoline. Properly blended reformulated gasoline will provide excellent performance and durability for the engine and fuel system components.

GASOLINE/OXYGENATE BLENDS

Some fuel suppliers blend unleaded gasoline with oxygenates such as 10% ethanol, MTBE, and ETBE. Oxygenates are required in some areas of the country during the winter months to reduce carbon monoxide emissions. Fuels blended with these oxygenates may be used in your vehicle.

CAUTION: DO NOT use gasoline containing METHANOL. Gasoline containing methanol may damage critical fuel system components.

MMT IN GASOLINE

MMT is a manganese-containing metallic additive that is blended into some gasoline to increase octane. Gasoline blended with MMT provide no performance advantage beyond gasoline of the same octane number without MMT. Gasoline blended with MMT reduce spark plug life and reduce emission system performance in some vehicles. We recommend that gasolines free of MMT be used in your vehicle. The MMT content of gasoline may not be indicated on the gasoline pump; therefore, you should ask your gasoline retailer whether or not his/her gasoline contains MMT.

It is even more important to look for gasoline without MMT in Canada because MMT can be used at levels higher than allowed in the United States. MMT is prohibited in Federal and California reformulated gasoline.

SULFUR IN GASOLINE

If you live in the northeast United States, your vehicle may have been designed to meet California low emission standards with Cleaner-Burning California reformulated gasoline with low sulfur. If such fuels are not available in states adopting California emission standards, your vehicles will operate satisfactorily on fuels meeting federal specifications, but

SPECIFICATIONS (Continued)

emission control system performance may be adversely affected. Gasoline sold outside of California is permitted to have higher sulfur levels which may affect the performance of the vehicle's catalytic converter. This may cause the Malfunction Indicator Lamp (MIL), Check Engine or Service Engine Soon light to illuminate. We recommend that you try a different brand of unleaded gasoline having lower sulfur to determine if the problem is fuel related prior to returning your vehicle to an authorized dealer for service.

CAUTION: If the Malfunction Indicator Lamp (MIL), Check Engine or Service Engine Soon light is flashing, immediate service is required; see on-board diagnostics system section.

MATERIALS ADDED TO FUEL

All gasoline sold in the United States and Canada are required to contain effective detergent additives. Use of additional detergents or other additives is not needed under normal conditions.

FUEL SYSTEM CAUTIONS

CAUTION: Follow these guidelines to maintain your vehicle's performance:

- The use of leaded gas is prohibited by Federal law. Using leaded gasoline can impair engine performance, damage the emission control system, and could result in loss of warranty coverage.
- An out-of-tune engine, or certain fuel or ignition malfunctions, can cause the catalytic converter to overheat. If you notice a pungent burning odor or some light smoke, your engine may be out of tune or malfunctioning and may require immediate service. Contact your dealer for service assistance.
- When pulling a heavy load or driving a fully loaded vehicle when the humidity is low and the temperature is high, use a premium unleaded fuel to help prevent spark knock. If spark knock persists, lighten the load, or engine piston damage may result.
- The use of fuel additives which are now being sold as octane enhancers is not recommended. Most of these products contain high concentrations of methanol. Fuel system damage or vehicle performance problems resulting from the use of such fuels or additives is not the responsibility of DaimlerChrysler Corporation and may not be covered under the new vehicle warranty.

NOTE: Intentional tampering with emissions control systems can result in civil penalties being assessed against you.

FUEL INJECTION SYSTEM

TABLE OF CONTENTS

page

DESCRIPTION AND OPERATION
INJECTION SYSTEM 21
PCM REPLACEMENT 22
MODES OF OPERATION 22
SYSTEM DIAGNOSIS. 24
PROGRAMMABLE COMMUNICATIONS INTERFACE (PCI) BUS 24
POWERTRAIN CONTROL MODULE. 24
PCM GROUND. 25
5-VOLT SUPPLY—PCM OUTPUT 26
8-VOLT SUPPLY—PCM OUTPUT 26
FUEL CORRECTION or ADAPTIVE MEMORIES . . 26
AUTOMATIC SHUTDOWN (ASD) SENSE—PCM INPUT 27
BATTERY VOLTAGE—PCM INPUT. 27
CLUTCH INTERLOCK/UPSTOP SWITCH 27
ENGINE COOLANT TEMPERATURE SENSOR—PCM INPUT. 28
HEATED OXYGEN SENSORS—PCM INPUT 29
IGNITION SENSE—PCM INPUT. 30
INLET/INTAKE AIR TEMPERATURE SENSOR—PCM INPUT. 30
MANIFOLD ABSOLUTE PRESSURE (MAP) SENSOR—PCM INPUT. 31
POWER STEERING PRESSURE SWITCH—PCM INPUT 32
SENSOR RETURN—PCM INPUT. 32
SCI RECEIVE—PCM INPUT. 32
THROTTLE POSITION SENSOR—PCM INPUT . . 32
VEHICLE SPEED SIGNAL—PCM INPUT 33
AUTOMATIC SHUTDOWN RELAY—PCM OUTPUT 34
PROPORTIONAL PURGE SOLENOID—PCM OUTPUT 34
IDLE AIR CONTROL MOTOR—PCM OUTPUT . . . 35
DATA LINK CONNECTOR. 35
MALFUNCTION INDICATOR (CHECK ENGINE) LAMP—PCM OUTPUT 36
SCI TRANSMIT—PCM INPUT 36
RADIATOR FAN RELAYS—PCM OUTPUT 36
TACHOMETER—PCM OUTPUT 36
THROTTLE BODY 36

REMOVAL AND INSTALLATION
THROTTLE BODY—2.4L ENGINES 36
THROTTLE POSITION SENSOR (TPS)—2.4L. . . . 38
IDLE AIR CONTROL MOTOR—2.4L 39
INLET AIR TEMPERATURE SENSOR. 39
MAP SENSOR 39
POWERTRAIN CONTROL MODULE. 40
OXYGEN SENSOR 1/1 UPSTREAM—2.4L 41
OXYGEN SENSOR 1/2 DOWNSTREAM 41
AIR CLEANER 42
FILTER ELEMENT REPLACEMENT 42
ENGINE COOLANT TEMPERATURE SENSOR. . . 42

SPECIFICATIONS
VEHICLE EMISSION CONTROL INFORMATION LABEL 43
TORQUE 43

SPECIAL TOOLS
FUEL 43

DESCRIPTION AND OPERATION

INJECTION SYSTEM

OPERATION

All engines used in this section have a sequential Multi-Port Electronic Fuel Injection system. The MPI system is computer regulated and provides precise air/fuel ratios for all driving conditions. The Powertrain Control Module (PCM) operates the fuel injection system.

The PCM regulates:

- Ignition timing
- Air/fuel ratio
- Emission control devices
- Cooling fan
- Charging system
- Idle speed
- Vehicle speed control

Various sensors provide the inputs necessary for the PCM to correctly operate these systems. In addition to the sensors, various switches also provide inputs to the PCM.

The PCM can adapt its programming to meet changing operating conditions.

Fuel is injected into the intake port above the intake valve in precise metered amounts through electrically operated injectors. The PCM fires the injectors in a specific sequence. Under most operating conditions, the PCM maintains an air fuel ratio of 14.7 parts air to 1 part fuel by constantly adjusting injector pulse width. Injector pulse width is the length of time the injector is open.

The PCM adjusts injector pulse width by opening and closing the ground path to the injector. Engine

DESCRIPTION AND OPERATION (Continued)

RPM (speed) and manifold absolute pressure (air density) are the primary inputs that determine injector pulse width.

PCM REPLACEMENT

DESCRIPTION

USE THE DRB SCAN TOOL TO REPROGRAM THE NEW PCM WITH THE VEHICLES ORIGINAL IDENTIFICATION NUMBER (VIN) AND THE VEHICLES ORIGINAL MILEAGE. IF THIS STEP IS NOT DONE A DIAGNOSTIC TROUBLE CODE (DTC) MAY BE SET.

MODES OF OPERATION

OPERATION

As input signals to the PCM change, the PCM adjusts its response to output devices. For example, the PCM must calculate a different injector pulse width and ignition timing for idle than it does for Wide Open Throttle (WOT). There are several different modes of operation that determine how the PCM responds to the various input signals.

There are two different areas of operation, OPEN LOOP and CLOSED LOOP.

During OPEN LOOP modes the PCM receives input signals and responds according to preset PCM programming. Inputs from the upstream and downstream heated oxygen sensors are not monitored during OPEN LOOP modes, except for heated oxygen sensor diagnostics (they are checked for shorted conditions at all times).

During CLOSED LOOP modes the PCM monitors the inputs from the upstream and downstream heated oxygen sensors. The upstream heated oxygen sensor input tells the PCM if the calculated injector pulse width resulted in the ideal air-fuel ratio of 14.7 to one. By monitoring the exhaust oxygen content through the upstream heated oxygen sensor, the PCM can fine tune injector pulse width. Fine tuning injector pulse width allows the PCM to achieve optimum fuel economy combined with low emissions.

For the PCM to enter CLOSED LOOP operation, the following must occur:

(1) Engine coolant temperature must be over 35°F.

- If the coolant is over 35° the PCM will wait 44 seconds.
- If the coolant is over 50°F the PCM will wait 38 seconds.
- If the coolant is over 167°F the PCM will wait 11 seconds.

(2) For other temperatures the PCM will interpolate the correct waiting time.

(3) O2 sensor must read either greater than 0.745 volts or less than 0.1 volt.

(4) The multi-port fuel injection systems has the following modes of operation:

- Ignition switch ON (Zero RPM)
- Engine start-up
- Engine warm-up
- Cruise
- Idle
- Acceleration
- Deceleration
- Wide Open Throttle
- Ignition switch OFF

(5) The engine start-up (crank), engine warm-up, deceleration with fuel shutoff and wide open throttle modes are OPEN LOOP modes. Under most operating conditions, the acceleration, deceleration (with A/C on), idle and cruise modes, **with the engine at operating temperature** are CLOSED LOOP modes.

IGNITION SWITCH ON (ZERO RPM) MODE

When the ignition switch activates the fuel injection system, the following actions occur:

- The PCM monitors the engine coolant temperature sensor and throttle position sensor input. The PCM determines basic fuel injector pulse width from this input.
- The PCM determines atmospheric air pressure from the MAP sensor input to modify injector pulse width.

When the key is in the ON position and the engine is not running (zero rpm), the Auto Shutdown (ASD) and fuel pump relays de-energize after approximately 1 second. Therefore, battery voltage is not supplied to the fuel pump, ignition coil, fuel injectors and heated oxygen sensors.

ENGINE START-UP MODE

This is an OPEN LOOP mode. If the vehicle is in park or neutral (automatic transaxles) or the clutch pedal is depressed (manual transaxles) the ignition switch energizes the starter relay. The following actions occur when the starter motor is engaged.

- If the PCM receives the camshaft position sensor and crankshaft position sensor signals, it energizes the Auto Shutdown (ASD) relay and fuel pump relay. If the PCM does not receive both signals within approximately one second, it will not energize the ASD relay and fuel pump relay. The ASD and fuel pump relays supply battery voltage to the fuel pump, fuel injectors, ignition coil and heated oxygen sensors.
- The PCM energizes the injectors (on the 69° degree falling edge) for a calculated pulse width until it determines crankshaft position from the camshaft position sensor and crankshaft position sensor signals. The PCM determines crankshaft position within 1 engine revolution.

DESCRIPTION AND OPERATION (Continued)

• After determining crankshaft position, the PCM begins energizing the injectors in sequence. It adjusts injector pulse width and controls injector synchronization by turning the individual ground paths to the injectors On and Off.

• When the engine idles within ±64 RPM of its target RPM, the PCM compares current MAP sensor value with the atmospheric pressure value received during the Ignition Switch On (zero RPM) mode.

Once the ASD and fuel pump relays have been energized, the PCM determines injector pulse width based on the following:

• Battery voltage
• Engine coolant temperature
• Engine RPM
• Inlet/Intake air temperature (IAT)
• MAP
• Throttle position
• The number of engine revolutions since cranking was initiated

During Start-up the PCM maintains ignition timing at 9° BTDC.

ENGINE WARM-UP MODE

This is an OPEN LOOP mode. The following inputs are received by the PCM:

• Engine coolant temperature
• Manifold Absolute Pressure (MAP)
• Inlet/Intake air temperature (IAT)
• Crankshaft position (engine speed)
• Camshaft position
• Knock sensor
• Throttle position
• A/C switch
• Battery voltage
• Power steering pressure switch
• Vehicle speed
• Speed control
• O2 sensors

The PCM adjusts injector pulse width and controls injector synchronization by turning the individual ground paths to the injectors On and Off.

The PCM adjusts ignition timing and engine idle speed. Engine idle speed is adjusted through the idle air control motor.

CRUISE OR IDLE MODE

When the engine is at operating temperature this is a CLOSED LOOP mode. During cruising or idle the following inputs are received by the PCM:

• Inlet/Intake air temperature
• Engine coolant temperature
• Manifold absolute pressure
• Crankshaft position (engine speed)
• Camshaft position
• Knock sensor
• Throttle position
• Exhaust gas oxygen content
• A/C control positions
• Power steering pressure switch
• Battery voltage
• Vehicle speed

The PCM adjusts injector pulse width and controls injector synchronization by turning the individual ground paths to the injectors On and Off.

The PCM adjusts engine idle speed and ignition timing. The PCM adjusts the air/fuel ratio according to the oxygen content in the exhaust gas (measured by the upstream and downstream heated oxygen sensor).

The PCM monitors for engine misfire. During active misfire and depending on the severity, the PCM either continuously illuminates or flashes the malfunction indicator lamp (Check Engine light on instrument panel). Also, the PCM stores an engine misfire DTC in memory.

The PCM performs several diagnostic routines. They include:

• Oxygen sensor monitor
• Downstream heated oxygen sensor diagnostics during open loop operation (except for shorted)
• Fuel system monitor
• EGR monitor
• Purge system monitor
• All inputs monitored for proper voltage range.
• All monitored components (refer to the Emission section for On-Board Diagnostics).

The PCM compares the upstream and downstream heated oxygen sensor inputs to measure catalytic convertor efficiency. If the catalyst efficiency drops below the minimum acceptable percentage, the PCM stores a diagnostic trouble code in memory.

During certain idle conditions, the PCM may enter a variable idle speed strategy. During variable idle speed strategy the PCM adjusts engine speed based on the following inputs.

• A/C sense
• Battery voltage
• Battery temperature
• Engine coolant temperature
• Engine run time
• Inlet/Intake air temperature
• Power steering pressure switch
• Vehicle mileage

ACCELERATION MODE

This is a CLOSED LOOP mode. The PCM recognizes an abrupt increase in Throttle Position sensor output voltage or MAP sensor output voltage as a demand for increased engine output and vehicle acceleration. The PCM increases injector pulse width in response to increased fuel demand.

DESCRIPTION AND OPERATION (Continued)

DECELERATION MODE

This is a CLOSED LOOP mode. During deceleration the following inputs are received by the PCM:

- A/C sense
- Battery voltage
- Inlet/Intake air temperature
- Engine coolant temperature
- Crankshaft position (engine speed)
- Exhaust gas oxygen content (upstream heated oxygen sensor)
- Knock sensor
- Manifold absolute pressure
- Power steering pressure switch
- Throttle position
- IAC motor control changes in response to MAP sensor feedback

The PCM may receive a closed throttle input from the Throttle Position Sensor (TPS) when it senses an abrupt decrease in manifold pressure. This indicates a hard deceleration. In response, the PCM may momentarily turn off the injectors. This helps improve fuel economy, emissions and engine braking.

WIDE-OPEN-THROTTLE MODE

This is an OPEN LOOP mode. During wide-open-throttle operation, the following inputs are used by the PCM:

- Inlet/Intake air temperature
- Engine coolant temperature
- Engine speed
- Knock sensor
- Manifold absolute pressure
- Throttle position

When the PCM senses a wide-open-throttle condition through the Throttle Position Sensor (TPS) it de-energizes the A/C compressor clutch relay. This disables the air conditioning system.

The PCM does not monitor the heated oxygen sensor inputs during wide-open-throttle operation except for downstream heated oxygen sensor and both shorted diagnostics. The PCM adjusts injector pulse width to supply a predetermined amount of additional fuel.

IGNITION SWITCH OFF MODE

When the operator turns the ignition switch to the OFF position, the following occurs:

- All outputs are turned off, unless 02 Heater Monitor test is being run. Refer to the Emission section for On-Board Diagnostics.
- No inputs are monitored except for the heated oxygen sensors. The PCM monitors the heating elements in the oxygen sensors and then shuts down.

SYSTEM DIAGNOSIS

OPERATION

The PCM can test many of its own input and output circuits. If the PCM senses a fault in a major system, the PCM stores a Diagnostic Trouble Code (DTC) in memory.

For DTC information see On-Board Diagnostics.

PROGRAMMABLE COMMUNICATIONS INTERFACE (PCI) BUS

DESCRIPTION

The Programmable Communication Interface Multiplex system (PCI Bus) consist of a single wire. The Body Control Module (BCM) acts as a splice to connect each module and the Data Link Connector (DLC) together. Each module is wired in parallel to the data bus through its PCI chip set and uses its ground as the bus reference. The wiring is a minimum 20 gage wire.

OPERATION

Various modules exchange information through a communications port called the PCI Bus. The Powertrain Control Module (PCM) transmits the Malfunction Indicator Lamp (Check Engine) On/Off signal and engine RPM on the PCI Bus. The PCM receives the Air Conditioning select input, transaxle gear position inputs over the PCI Bus. The PCM also receives the air conditioning evaporator temperature signal from the PCI Bus.

The following components access or send information on the PCI Bus.

- Instrument Panel
- Body Control Module
- Air Bag System Diagnostic Module
- Full ATC Display Head
- ABS Module
- Transmission Control Module
- Powertrain Control Module
- Overhead Travel Module

POWERTRAIN CONTROL MODULE

DESCRIPTION

The Powertrain Control Module (PCM) is a digital computer containing a microprocessor.

OPERATION

The PCM receives input signals from various switches and sensors that are referred to as PCM Inputs. Based on these inputs, the PCM adjusts various engine and vehicle operations through devices that are referred to as PCM Outputs.

DESCRIPTION AND OPERATION (Continued)

NOTE: PCM Inputs:

- Air Conditioning Controls
- Battery Voltage
- Battery Temperature Sensor
- Brake Switch
- Camshaft Position Sensor
- Crankshaft Position Sensor
- CCD Bus
- Engine Coolant Temperature Sensor
- Fuel Level Sensor
- Ignition Switch
- Intake Air Temperature Sensor
- Knock Sensor (2.0/2.4L only)
- Leak Detection Pump
- Manifold Absolute Pressure (MAP) Sensor
- Oxygen Sensors
- Power Steering Pressure Switch
- SCI Receive
- Speed Control Switches
- Throttle Position Sensor
- Transmission Park/Neutral Switch (automatic transmission)
- Vehicle Speed Sensor

NOTE: PCM Outputs:

- Air Conditioning Clutch Relay
- Auto Shutdown (ASD) Relay
- Charging Indicator Lamp
- CCD Bus
- SCI Transmit
- Proportional Purge Solenoid
- EGR Solenoid
- Fuel Injectors
- Fuel Pump Relay
- Generator Field
- Idle Air Control Motor
- Ignition Coils
- Malfunction Indicator (Check Engine) Lamp
- Radiator Fan Relays
- Speed Control Solenoids

Based on inputs it receives, the PCM adjusts fuel injector pulse width, idle speed, ignition spark advance, ignition coil dwell and EVAP canister purge operation. The PCM regulates the cooling fan, air conditioning and speed control systems. The PCM changes generator charge rate by adjusting the generator field. The PCM also performs diagnostics.

The PCM adjusts injector pulse width (air-fuel ratio) based on the following inputs.

- Battery voltage
- Coolant temperature
- Exhaust gas content (oxygen sensor)
- Engine speed (crankshaft position sensor)
- Intake air temperature
- Manifold absolute pressure
- Throttle position

The PCM adjusts ignition timing based on the following inputs.

- Coolant temperature
- Engine speed (crankshaft position sensor)
- Knock sensor
- Manifold absolute pressure
- Throttle position
- Transmission gear selection (park/neutral switch)
- Intake air temperature

The PCM also adjusts engine idle speed through the idle air control motor based on the following inputs.

- Air conditioning sense
- Battery voltage
- Battery temperature
- Brake switch
- Coolant temperature
- Engine speed (crankshaft position sensor)
- Engine run time
- Manifold absolute pressure
- Power steering pressure switch
- Throttle position
- Transmission gear selection (park/neutral switch)
- Vehicle distance (speed)

The Auto Shutdown (ASD) and fuel pump relays are located in the Power Distribution Center (PDC).

The camshaft position sensor and crankshaft position sensor signals are sent to the PCM. If the PCM does not receive the signal within approximately 1 second of engine cranking, it deactivates the ASD relay and fuel pump relay. When these relays are deactivated, power is shut off from the fuel injectors, ignition coils, oxygen sensor heating elements and fuel pump.

The PCM contains a voltage converter that changes battery voltage to a regulated 9 volts direct current to power the camshaft position sensor, crankshaft position sensor and vehicle speed sensor. The PCM also provides a 5 volt direct current supply for the manifold absolute pressure sensor, throttle position sensor, and A/C pressure switch.

PCM GROUND

OPERATION

Ground is provided through multiple pins of the PCM connector. Depending on the vehicle there may be as many as three different ground pins. There are power grounds and sensor grounds.

The power grounds are used to control the ground side of any relay, solenoid, ignition coil or injector. The signal ground is used for any input that uses

sensor return for ground, and the ground side of any internal processing component.

The SBEC III case is shielded to prevent RFI and EMI. The PCM case is grounded and must be firmly attached to a good, clean body ground.

Internally all grounds are connected together, however there is noise suppression on the sensor ground. For EMI and RFI protection the case is also grounded separately from the ground pins.

5-VOLT SUPPLY—PCM OUTPUT

OPERATION

The PCM supplies 5 volts to the following sensors:

- A/C pressure transducer
- Engine coolant temperature sensor
- Manifold absolute pressure sensor
- Throttle position sensor
- Linear EGR solenoid

8-VOLT SUPPLY—PCM OUTPUT

OPERATION

The PCM supplies 8 volts to the crankshaft position sensor, camshaft position sensor.

FUEL CORRECTION or ADAPTIVE MEMORIES

DESCRIPTION

In Open Loop, the PCM changes pulse width without feedback from the O2 Sensors. Once the engine warms up to approximately 30 to 35° F, the PCM goes into closed loop **Short Term Correction** and utilizes feedback from the O2 Sensors. Closed loop **Long Term Adaptive Memory** is maintained above 170° to 190° F unless the PCM senses wide open throttle. At that time the PCM returns to Open Loop operation.

OPERATION

Short Term

The first fuel correction program that begins functioning is the short term fuel correction. This system corrects fuel delivery in direct proportion to the readings from the Upstream O2 Sensor.

The PCM monitors the air/fuel ratio by using the input voltage from the O2 Sensor. When the voltage reaches its preset high or low limit, the PCM begins to add or remove fuel until the sensor reaches its switch point. The short term corrections then begin.

The PCM makes a series of quick changes in the injector pulse-width until the O2 Sensor reaches its opposite preset limit or switch point. The process then repeats itself in the opposite direction.

Short term fuel correction will keep increasing or decreasing injector pulse-width based upon the upstream O2 Sensor input. The maximum range of authority for short term memory is 25% (+/-) of base pulse-width.

Long Term

The second fuel correction program is the long term adaptive memory. In order to maintain correct emission throughout all operating ranges of the engine, a cell structure based on engine rpm and load (MAP) is used.

There number of cells varies upon the driving conditions. Two cells are used only during idle, based upon TPS and Park/Neutral switch inputs. There may be two other cells used for deceleration, based on TPS, engine rpm, and vehicle speed. The other twelve cells represent a manifold pressure and an rpm range. Six of the cells are high rpm and the other six are low rpm. Each of these cells is a specific MAP voltage range.

As the engine enters one of these cells the PCM looks at the amount of short term correction being used. Because the goal is to keep short term at 0 (O2 Sensor switching at 0.5 volt), long term will update in the same direction as short term correction was moving to bring the short term back to 0. Once short term is back at 0, this long term correction factor is stored in memory.

The values stored in long term adaptive memory are used for all operating conditions, including open loop. However, the updating of the long term memory occurs after the engine has exceeded approximately 17° F, with fuel control in closed loop and two minutes of engine run time. This is done to prevent any transitional temperature or start-up compensations from corrupting long term fuel correction.

Long term adaptive memory can change the pulse-width by as much as 25%, which means it can correct for all of short term. It is possible to have a problem that would drive long term to 25% and short term to another 25% for a total change of 50% away from base pulse-width calculation.

DESCRIPTION AND OPERATION (Continued)

TYPICAL ADAPTIVE MEMORY FUEL CELLS

	Open Throttle	Open Throttle	Open Throttle	Open Throttle	Open Throttle	Open Throttle	Idle	Decel
Vacuum	20	17	13	9	5	0		
Above 1,984 rpm	1	3	5	7	9	11	13 Drive	15
Below 1,984 rpm	0	2	4	6	8	10	12 Neutral	14
MAP volt =	0	1.4	2.0	2.6	3.3	3.9		

Fuel Correction Diagnostics

There are two fuel correction diagnostic routines:

- Fuel System Rich
- Fuel System Lean

A DTC is set and the MIL is illuminated if the PCM detects either of these conditions.

AUTOMATIC SHUTDOWN (ASD) SENSE—PCM INPUT

DESCRIPTION

It is an input to the Powertrain Control Module from the rely in the Power Distribution Center, refer to the cover for relay location.

OPERATION

The ASD sense circuit informs the PCM when the ASD relay energizes. A 12 volt signal at this input indicates to the PCM that the ASD has been activated. This input is used only to sense that the ASD relay is energized.

When energized, the ASD relay provides power to operate the injectors, ignition coil, generator field, O2 sensor heaters (both upstream and downstream), and also provides a sense circuit to the PCM for diagnostic purposes. The PCM energizes the ASD any time there is a Crankshaft Position sensor signal that exceeds a predetermined value. The ASD relay can also be energized after the engine has been turned off to perform an O2 sensor heater test, if vehicle is equipped with OBD II diagnostics.

With SBEC III, the ASD relay's electromagnet is fed battery voltage, not ignition voltage. The PCM still provides the ground. As mentioned earlier, the PCM energizes the ASD relay during an O2 sensor heater test. This test is performed only after the engine has been shut off. The PCM still operates internally to perform several checks, including monitoring the O2 sensor heaters. This and other DTC tests are explained in detail in the On-Board Diagnostic Student Reference Book.

BATTERY VOLTAGE—PCM INPUT

DESCRIPTION

The direct battery feed to the PCM is used as a reference point to sense battery voltage.

OPERATION

In order for the PCM to operate, it must be supplied with battery voltage and ground. The PCM monitors the direct battery feed input to determine battery charging rate and to control the injector initial opening point. It also has back-up RAM memory used to store Diagnostic Trouble Codes (supply working DTCs). Direct battery feed is also used to perform key-OFF diagnostics and to supply working voltage to the controller for OBDII.

If battery voltage is low the PCM will increase injector pulse width (period of time that the injector is energized).

Effect on Fuel Injectors

Fuel injectors are rated for operation at a specific voltage. If the voltage increases, the plunger will open faster and conversely, if voltage is low the injector will be slow to open. Therefore, if sensed battery voltage drops, the PCM increases injector pulse-width to maintain the same volume of fuel through the injector.

Charging

The PCM uses sensed battery voltage to verify that target charging voltage (determined by Battery Temperature Sensor) is being reached. To maintain the target charging voltage, the PCM will full field the generator to 0.5 volt above target then turn OFF to 0.5 volt below target. This will continue to occur up to a 100 Hz frequency, 100 times per second.

CLUTCH INTERLOCK/UPSTOP SWITCH

DESCRIPTION

The clutch interlock/upstop switch is an assembly consisting of two switches: an engine starter inhibit

DESCRIPTION AND OPERATION (Continued)

switch (interlock) and a clutch pedal upstop switch (Fig. 1). The switch assembly is located in the clutch/brake pedal bracket assembly (Fig. 2), each switch being fastened by four plastic wing tabs.

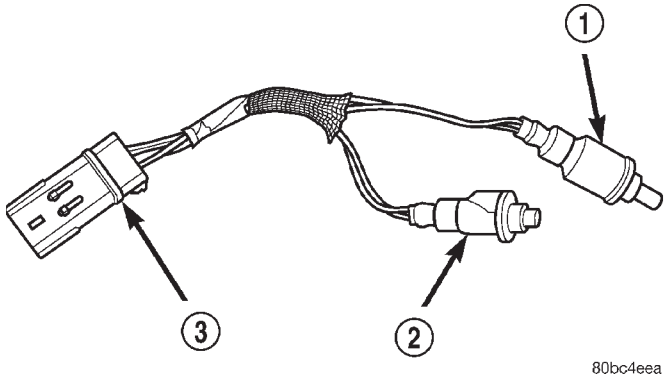

Fig. 1 Clutch Interlock/Upstop Switch

1 – UPSTOP SWITCH
2 – INTERLOCK SWITCH
3 – CONNECTOR

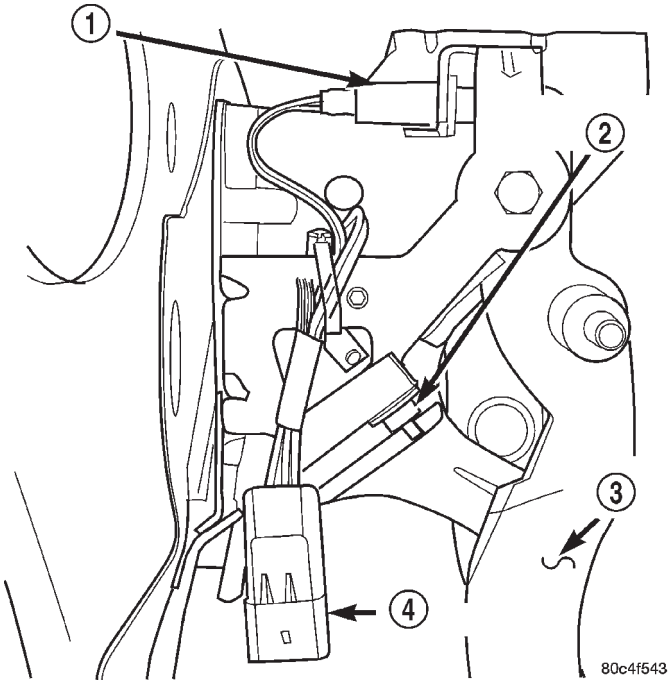

Fig. 2 Clutch/Brake Pedal Bracket Assembly

1 – UPSTOP SWITCH
2 – INTERLOCK SWITCH
3 – CLUTCH PEDAL
4 – CONNECTOR

OPERATION

Clutch Interlock Switch

The clutch interlock switch prevents engine starter operation and inadvertent vehicle movement with the clutch engaged and the transaxle in gear.

The switch is open while the clutch pedal is at rest. When the clutch pedal is fully depressed, the pedal blade contacts and closes the switch, completing the signal circuit from the PCM and closing the ground path, allowing engine starter operation. The interlock switch is not adjustable.

Clutch Pedal Upstop Switch

With the clutch pedal at rest, the clutch pedal upstop switch is closed, allowing speed control operation. When the clutch pedal is depressed, the upstop switch opens and signals the PCM to cancel speed control operation, and enter a modified engine calibration schedule to improve driveability during gear-to-gear shifts. The upstop switch is not adjustable.

ENGINE COOLANT TEMPERATURE SENSOR—PCM INPUT

DESCRIPTION

The coolant sensor threads into the front of the cylinder head near the radiator fill tube (Fig. 3). New sensors have sealant applied to the threads.

The ECT Sensor is a Negative Thermal Coefficient (NTC), dual range Sensor. The resistance of the ECT Sensor changes as coolant temperature changes. This results in different input voltages to the PCM. The PCM also uses the ECT Sensor input to operate the low and high speed radiator cooling fans.

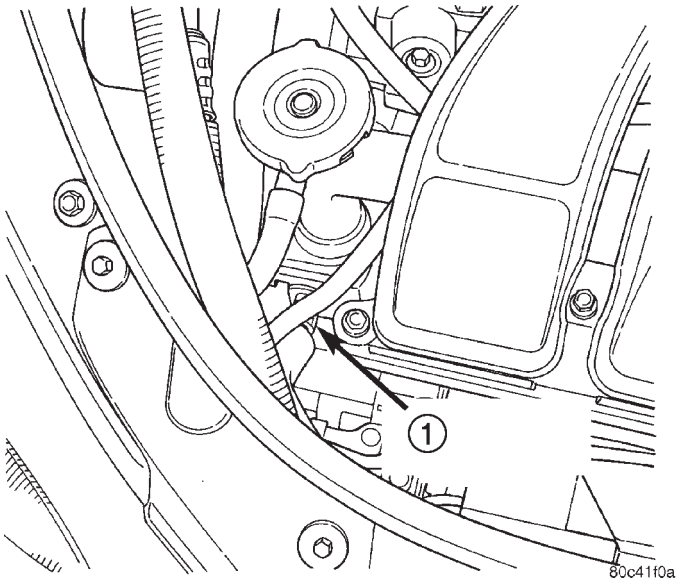

Fig. 3 Engine Coolant Temperature Sensor—2.4L

1 – COOLANT TEMPERATURE SENSOR

OPERATION

The PCM sends 5 volts to the sensor and is grounded through the sensor return line. As temperature increases, resistance in the sensor decreases.

DESCRIPTION AND OPERATION (Continued)

As coolant temperature varies, the coolant temperature sensor resistance changes resulting in a different voltage value at the PCM engine coolant sense circuit.

When the engine is cold, the PCM will provide slightly richer air-fuel mixtures and higher idle speeds until normal operating temperatures are reached.

The combination coolant temperature sensor has two elements. One element supplies coolant temperature signal to the PCM. The other element supplies coolant temperature signal to the instrument panel gauge cluster. The PCM determines engine coolant temperature from the coolant temperature sensor.

As coolant temperature varies the coolant temperature sensors resistance changes resulting in a different input voltage to the PCM and the instrument panel gauge cluster.

When the engine is cold, the PCM will provide slightly richer air- fuel mixtures and higher idle speeds until normal operating temperatures are reached.

The PCM has a dual temperature range program for better sensor accuracy at cold temperatures. At key-ON the PCM sends a regulated five volt signal through a 10,000 ohm resistor to the sensor. When the sensed voltage reaches approximately 1.25 volts the PCM turns on the transistor. The transistor connects a 1,000 ohm resistor in parallel with the 10,000 ohm resistor. With this drop in resistance the PCM recognizes an increase in voltage on the input circuit.

HEATED OXYGEN SENSORS—PCM INPUT

DESCRIPTION

The upstream oxygen sensor threads into the outlet flange of the exhaust manifold (Fig. 4). The downstream oxygen sensor threads into the side of the catalytic converter.

OPERATION

The O2 sensors produce voltages from 0 to 1 volt, depending upon the oxygen content of the exhaust gas in the exhaust manifold. When a large amount of oxygen is present (caused by a lean air/fuel mixture), the sensors produce a voltage below.45 volts. When there is a lesser amount present (rich air/fuel mixture) it produces a voltage above.45 volts. By monitoring the oxygen content and converting it to electrical voltage, the sensors act as a rich- lean switch.

The oxygen sensors are equipped with a heating element that keeps the sensors at proper operating temperature during all operating modes. Maintaining correct sensor temperature at all times allows the system to enter into closed loop operation sooner.

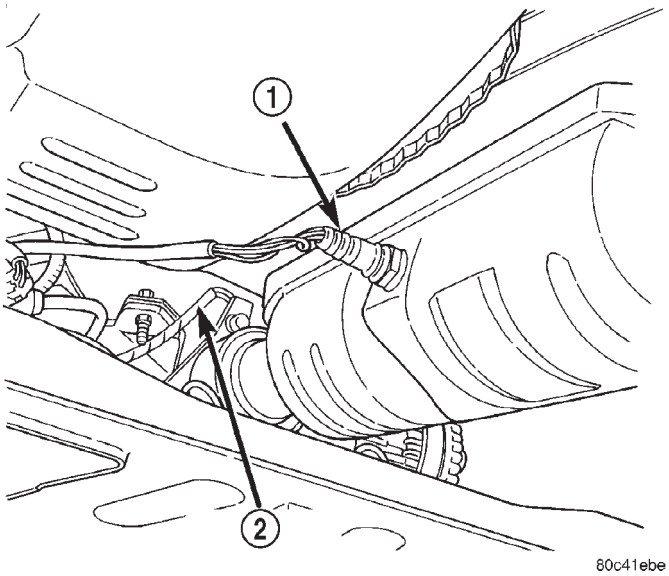

Fig. 4 Oxygen Sensor 1/1 Upstream and 1/2 Downstream

1 – DOWN STREAM O2 SENSOR
2 – UP STREAM O2 SENSOR

Also, it allows the system to remain in closed loop operation during periods of extended idle. Upstream O2s (California emission equipped) are Pulse Width Modulated (PWM). They have a start-up delay to remove moisture from the heater element on cold start. This start-up delay may cause the DRB O2 Heater actuator test to be denied. The ground circuit is controlled by the PCM. This allows the PCM to duty cycle the heating element for the upstream O2s

In Closed Loop operation the PCM monitors the O2 sensor input (along with other inputs) and adjusts the injector pulse width accordingly. During Open Loop operation the PCM ignores the O2 sensor input. The PCM adjusts injector pulse width based on preprogrammed (fixed) values and inputs from other sensors.

The Automatic Shutdown (ASD) relay supplies battery voltage to both the upstream and downstream heated oxygen sensors. The oxygen sensors are equipped with a heating element. The heating elements reduce the time required for the sensors to reach operating temperature.

UPSTREAM OXYGEN SENSOR 1/1

The input from the upstream heated oxygen sensor tells the PCM the oxygen content of the exhaust gas. Based on this input, the PCM fine tunes the air-fuel ratio by adjusting injector pulse width.

The sensor input switches from 0 to 1 volt, depending upon the oxygen content of the exhaust gas in the exhaust manifold. When a large amount of oxygen is present (caused by a lean air-fuel mixture), the

DESCRIPTION AND OPERATION (Continued)

sensor produces voltage as low as 0.1 volt. When there is a lesser amount of oxygen present (rich air-fuel mixture) the sensor produces a voltage as high as 1.0 volt. By monitoring the oxygen content and converting it to electrical voltage, the sensor acts as a rich-lean switch.

The heating element in the sensor provides heat to the sensor ceramic element. Heating the sensor allows the system to enter into closed loop operation sooner. Also, it allows the system to remain in closed loop operation during periods of extended idle.

In Closed Loop, the PCM adjusts injector pulse width based on the upstream heated oxygen sensor input along with other inputs. In Open Loop, the PCM adjusts injector pulse width based on preprogrammed (fixed) values and inputs from other sensors.

DOWNSTREAM OXYGEN SENSOR 1/2

The Downstream O2 Sensor has two functions. One function is measuring catalyst efficiency. This is an OBD II requirement. The oxygen content of the exhaust gasses has significantly less fluctuation than at the inlet if the converter is working properly. The PCM compares upstream and Downstream O2 Sensor switch rates under specific operating conditions to determine if the catalyst is functioning properly.

The other function is a downstream fuel control. The upstream O2 goal varies within the window of operation of the O2 Sensor. In the past the goal was a preprogrammed fixed value based upon where it believed the catalyst operated most efficiently.

While the Upstream O2 Sensor input is used to maintain the 14.7:1 air/fuel ratio, variations in engines, exhaust systems and catalytic converters may cause this ratio to not be the most ideal for a particular catalyst and engine. To help maintain the catalyst operating at maximum efficiency, the PCM will fine tune the air/fuel ratio entering the catalyst based upon the oxygen content leaving the catalyst. This is accomplished by modifying the Upstream O2 Sensor voltage goal.

If the exhaust leaving the catalyst has too much oxygen (lean) the PCM increases the upstream O2 goal which increases fuel in the mixture causing less oxygen to be left over. Conversely, if the oxygen content leaving the catalyst has is too little oxygen (rich) the PCM decreases the upstream O2 goal down which removes fuel from the mixture causing more oxygen to be left over. This function only occurs during downstream closed loop mode operation.

IGNITION SENSE—PCM INPUT

OPERATION

The ignition sense input informs the Powertrain Control Module (PCM) that the ignition switch is in the crank or run position.

INLET/INTAKE AIR TEMPERATURE SENSOR—PCM INPUT

DESCRIPTION

The IAT sensor attaches to the intake air duct (Fig. 5).

The IAT Sensor is a Negative Temperature Coefficient (NTC) Sensor that provides information to the PCM regarding the temperature of the air entering the intake manifold. The PCM sends 5 volts to the sensor and is grounded through the sensor return line. As temperature increases, resistance in the sensor decreases.

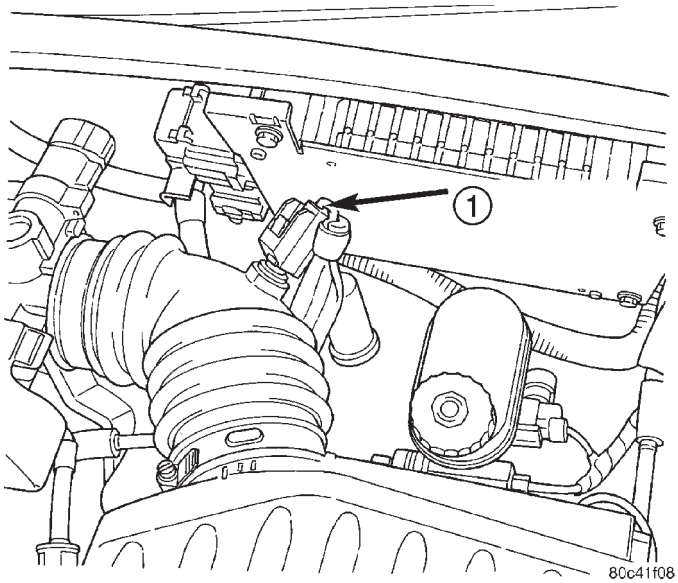

Fig. 5 Inlet Air Temperature Sensor

1 – INLET AIR TEMPERATURE SENSOR

OPERATION

Inlet/Intake Air Temperature

The inlet air temperature sensor replaces the intake air temperature sensor and the battery temperature sensor. The PCM uses the information from the inlet air temperature sensor to determine values to use as an intake air temperature sensor and a battery temperature sensor.

DESCRIPTION AND OPERATION (Continued)

The Intake Air Temperature (IAT) sensor value is used by the PCM to determine air density.

The PCM uses this information to calculate:

- Injector pulse width
- Adjustment of ignition timing (to prevent spark knock at high intake air temperatures)

Battery Temperature

The inlet air temperature sensor replaces the intake air temperature sensor and the battery temperature sensor. The PCM uses the information from the inlet air temperature sensor to determine values for the PCM to use as an intake air temperature sensor and a battery temperature sensor.

The battery temperature information along with data from monitored line voltage (B+), is used by the PCM to vary the battery charging rate. System voltage will be higher at colder temperatures and is gradually reduced at warmer temperatures.

The battery temperature information is also used for OBD II diagnostics. Certain faults and OBD II monitors are either enabled or disabled depending upon the battery temperature sensor input (example: disable purge, enable LDP). Most OBD II monitors are disabled below 20°F.

MANIFOLD ABSOLUTE PRESSURE (MAP) SENSOR—PCM INPUT

DESCRIPTION

The MAP sensor mounts to the intake manifold (Fig. 6).

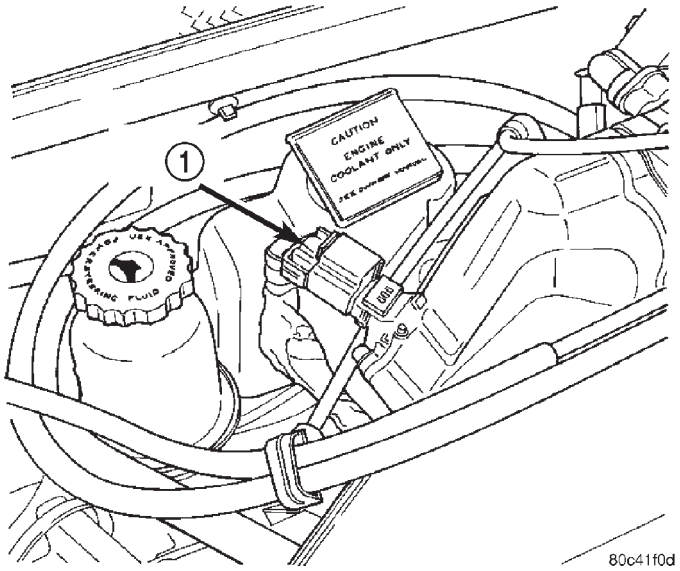

Fig. 6 MAP Sensor

1 – MAP SENSOR

OPERATION

The MAP serves as a PCM input, using a silicon based sensing unit, to provide data on the manifold vacuum that draws the air/fuel mixture into the combustion chamber. The PCM requires this information to determine injector pulse width and spark advance. When MAP equals Barometric pressure, the pulse width will be at maximum.

Also like the cam and crank sensors, a 5 volt reference is supplied from the PCM and returns a voltage signal to the PCM that reflects manifold pressure. The zero pressure reading is 0.5V and full scale is 4.5V. For a pressure swing of 0 — 15 psi the voltage changes 4.0V. The sensor is supplied a regulated 4.8 to 5.1 volts to operate the sensor. Like the cam and crank sensors ground is provided through the sensor return circuit.

The MAP sensor input is the number one contributor to pulse width. The most important function of the MAP sensor is to determine barometric pressure. The PCM needs to know if the vehicle is at sea level or is it in Denver at 5000 feet above sea level, because the air density changes with altitude. It will also help to correct for varying weather conditions. If a hurricane was coming through the pressure would be very, very low or there could be a real fair weather, high pressure area. This is important because as air pressure changes the barometric pressure changes. Barometric pressure and altitude have a direct inverse correlation, as altitude goes up barometric goes down. The first thing that happens as the key is rolled on, before reaching the crank position, the PCM powers up, comes around and looks at the MAP voltage, and based upon the voltage it sees, it knows the current barometric pressure relative to altitude. Once the engine starts, the PCM looks at the voltage again, continuously every 12 milliseconds, and compares the current voltage to what it was at key on. The difference between current and what it was at key on is manifold vacuum.

During key On (engine not running) the sensor reads (updates) barometric pressure. A normal range can be obtained by monitoring known good sensor in you work area.

As the altitude increases the air becomes thinner (less oxygen). If a vehicle is started and driven to a very different altitude than where it was at key On the barometric pressure needs to be updated. Any time the PCM sees Wide Open throttle, based upon TPS angle and RPM it will update barometric pressure in the MAP memory cell. With periodic updates, the PCM can make its calculations more effectively.

The PCM uses the MAP sensor to aid in calculating the following:

- Barometric pressure
- Engine load

DESCRIPTION AND OPERATION (Continued)

- Manifold pressure
- Injector pulse-width
- Spark-advance programs
- Shift-point strategies (F4AC1 transmissions only, via the CCD bus)
- Idle speed
- Decel fuel shutoff

The MAP sensor signal is provided from a single piezoresistive element located in the center of a diaphragm. The element and diaphragm are both made of silicone. As the pressures changes the diaphragm moves causing the element to deflect which stresses the silicone. When silicone is exposed to stress its resistance changes. As manifold vacuum increases, the MAP sensor input voltage decreases proportionally. The sensor also contains electronics that condition the signal and provide temperature compensation.

The PCM recognizes a decrease in manifold pressure by monitoring a decrease in voltage from the reading stored in the barometric pressure memory cell. The MAP sensor is a linear sensor; as pressure changes, voltage changes proportionately. The range of voltage output from the sensor is usually between 4.6 volts at sea level to as low as 0.3 volts at 26 in. of Hg (Table 1). Barometric pressure is the pressure exerted by the atmosphere upon an object. At sea level on a standard day, no storm, barometric pressure is 29.92 in Hg. For every 100 feet of altitude barometric pressure drops.10 in. Hg. If a storm goes through it can either add, high pressure, or decrease, low pressure, from what should be present for that altitude. You should make a habit of knowing what the average pressure and corresponding barometric pressure is for your area. Always use the Diagnostic Test Procedures Manual for MAP sensor testing.

POWER STEERING PRESSURE SWITCH—PCM INPUT

DESCRIPTION

A pressure sensing switch is located on the power steering gear.

OPERATION

The switch (Fig. 7) provides an input to the PCM during periods of high pump load and low engine RPM; such as during parking maneuvers. The PCM sends 12 volts through a resistor to the sensor circuit to ground.

When power steering pump pressure exceeds 4137 kPa (600 psi), the switch is open. The PCM increases idle air flow through the IAC motor to prevent engine stalling. When pump pressure is low, the switch is closed.

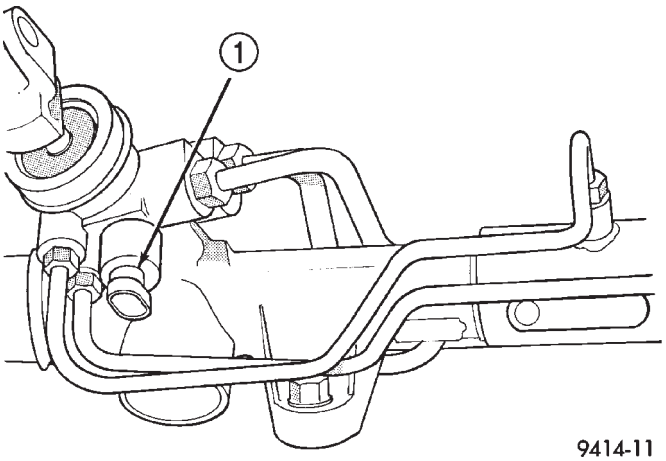

Fig. 7 Power Steering Pressure Switch

1 – POWER STEERING PRESSURE SWITCH

SENSOR RETURN—PCM INPUT

OPERATION

The sensor return circuit provides a low electrical noise ground reference for all of the systems sensors. The sensor return circuit connects to internal ground circuits within the Powertrain Control Module (PCM).

SCI RECEIVE—PCM INPUT

OPERATION

SCI Receive is the serial data communication receive circuit for the DRB scan tool. The Powertrain Control Module (PCM) receives data from the DRB through the SCI Receive circuit.

THROTTLE POSITION SENSOR—PCM INPUT

DESCRIPTION

The throttle position sensor mounts to the side of the throttle body (Fig. 8).

OPERATION

The Throttle Position Sensor (TPS) connects to the throttle blade shaft. The TPS is a variable resistor that provides the PCM with an input signal (voltage). The signal represents throttle blade position. As the position of the throttle blade changes, the resistance of the TPS changes.

The PCM supplies approximately 5 volts DC to the TPS. The TPS output voltage (input signal to the PCM) represents throttle blade position. The TPS output voltage to the PCM varies from approximately 0.5 volt at minimum throttle opening (idle) to a maximum of 3.7 volts at wide open throttle.

DESCRIPTION AND OPERATION (Continued)

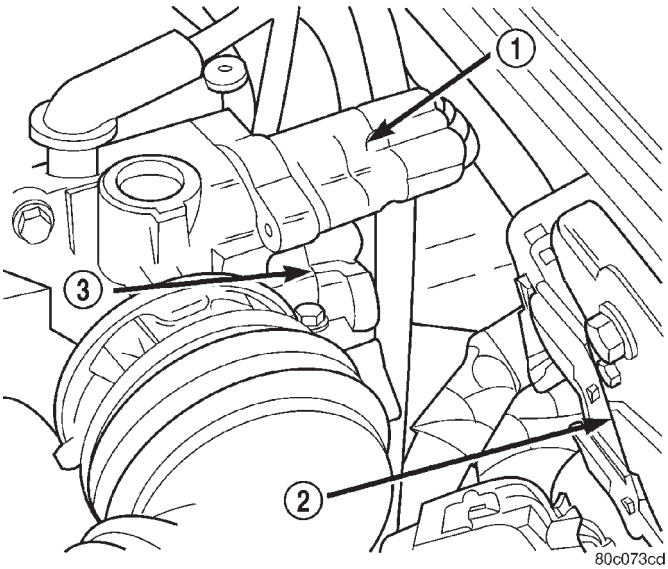

Fig. 8 Throttle Position Sensor—2.4L Engines

1 – IAC
2 – PCM
3 – TPS

Along with inputs from other sensors, the PCM uses TPS input to determine current engine operating conditions. The PCM also adjusts fuel injector pulse width and ignition timing based on these inputs.

VEHICLE SPEED SIGNAL—PCM INPUT

DESCRIPTION

The vehicle speed sensor is located in the transmission extension housing (Fig. 9).

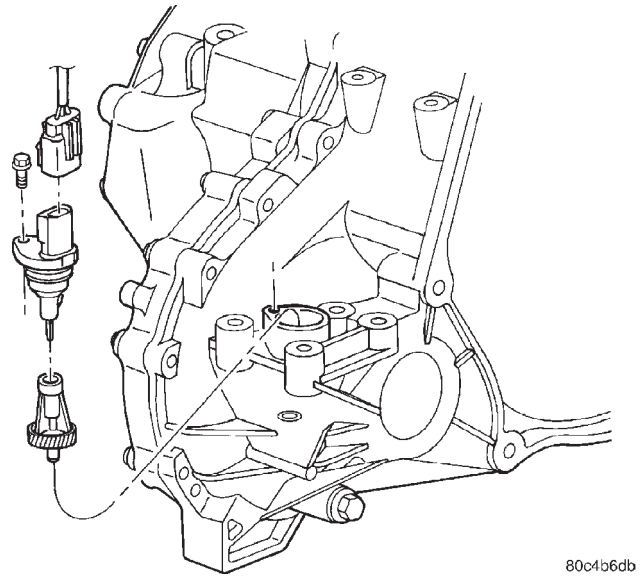

Fig. 9 Vehicle Speed Sensor—Manual Transmission

OPERATION

AUTOMATIC

The transaxle control module (TCM) supplies the vehicle speed signal to the PCM based on the output shaft speed. The PCM sends a 5 volt signal to the TCM. The TCM switches this signal to a ground, and then opens the circuit at a rate of 8000 pulses per mile. When the PCM counts 8000 pulses, the PCM assumes the vehicle has traveled one mile. The output speed sensor is located on the side of the transaxle (Fig. 10).

The speed and distance signals, along with a closed throttle signal from the TPS, determine if a closed throttle deceleration or normal idle condition (vehicle stopped) exists. Under deceleration conditions, the PCM adjusts the idle air control motor to maintain a desired MAP value. Under idle conditions, the PCM adjusts the idle air control motor to maintain a desired engine speed.

MANUAL

The sensor input is used by the PCM to determine vehicle speed and distance traveled and is a Hall-effect sensor.

The Hall-effect sensor generates 8 pulses per sensor revolution. These signals, in conjunction with a closed throttle signal from the throttle position sensor, indicate a closed throttle deceleration to the PCM. Under deceleration conditions, the PCM adjusts the Idle Air Control (IAC) motor to maintain a desired MAP value.

Like all Hall-effect sensors, the electronics of the sensor needs a power source. This power source is provided by the PCM. The sensor switches a 5 volt signal sent from the PCM from a ground to an open circuit. It is the same 9 volt power supply that is used by the CKP and CMP sensors.

When the vehicle is stopped at idle, a closed throttle signal is received by the PCM (but a speed sensor signal is not received). Under idle conditions, the PCM adjusts the IAC motor to maintain a desired engine speed.

The vehicle speed sensor signal is also used to operate the following functions or systems:

- Speedometer
- Speed control
- Daytime Running Lights (Canadian Vehicles only).

The VSS used on 3 speed automatic and manual transaxle vehicles This sensor is mechanically driven by a pinion gear that is in mesh with the right axle drive shaft. When the PCM counts 4000 pulses, the PCM assumes the vehicle has traveled one mile.

DESCRIPTION AND OPERATION (Continued)

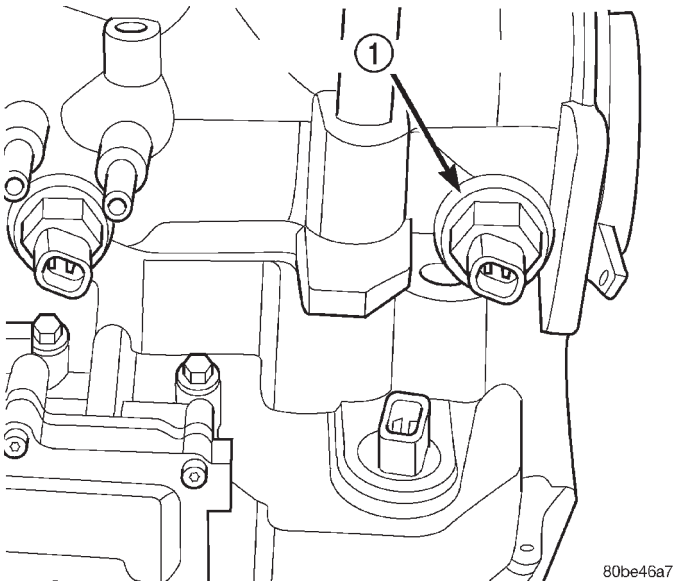

Fig. 10 Output Speed Sensor—Automatic Transaxle
1 – OUTPUT SPEED SENSOR

AUTOMATIC SHUTDOWN RELAY—PCM OUTPUT

DESCRIPTION

The ASD relay and fuel pump relay are located in the Power Distribution Center (PDC) near the Air Cleaner (Fig. 11). The inside top of the PDC cover has a label showing relay and fuse location. They are ISO relays.

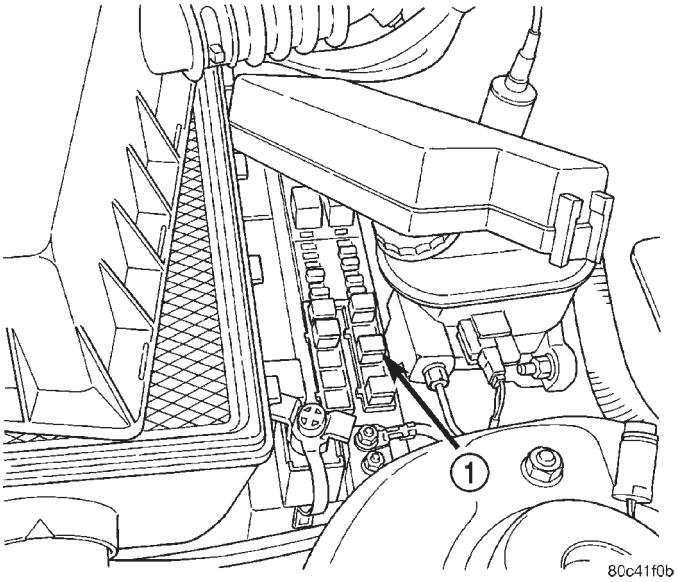

Fig. 11 Power Distribution Center (PDC)
1 – PDC

OPERATION

The PCM operates the Automatic Shut Down (ASD) relay and fuel pump relay. The PCM operates them by switching the ground path for the relays on and off.

The ASD relay connects battery voltage to the fuel injectors, ignition coil, generator field, and the heating elements in the oxygen sensors. The fuel pump relay connects battery voltage to the fuel pump.

The PCM turns the ground path off when the ignition switch is in the Off position. Both relays are off. When the ignition switch is in the On or Crank position, the PCM monitors the crankshaft position sensor and camshaft position sensor signals to determine engine speed. If the PCM does not receive a crankshaft position sensor signal and camshaft position sensor signal when the ignition switch is in the Run position, it de-energizes both relays. When the relays are de-energized, battery voltage is not supplied to the fuel injectors, ignition coil, generator field, and the heating elements in the oxygen sensors, and fuel pump.

PROPORTIONAL PURGE SOLENOID—PCM OUTPUT

DESCRIPTION

All vehicles use a proportional purge solenoid. The solenoid regulates the rate of vapor flow from the EVAP canister to the throttle body. The PCM operates the solenoid (Fig. 12).

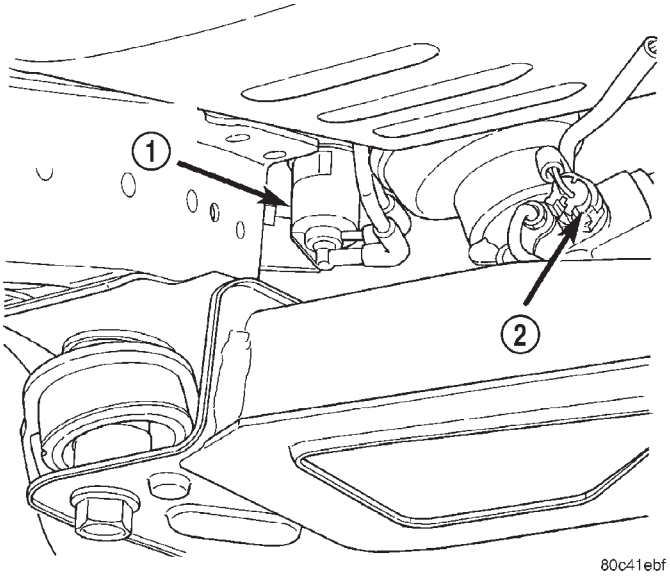

Fig. 12 Proportional Purge Solenoid
1 – POWER STEERING SWITCH
2 – EVAP PURGE SOLENOID

DESCRIPTION AND OPERATION (Continued)

OPERATION

All vehicles use a proportional purge solenoid. The solenoid regulates the rate of vapor flow from the EVAP canister to the throttle body. The PCM operates the solenoid.

During the cold start warm-up period and the hot start time delay, the PCM does not energize the solenoid. When de-energized, no vapors are purged.

The proportional purge solenoid operates at a frequency of 200 hz and is controlled by an engine controller circuit that senses the current being applied to the proportional purge solenoid and then adjusts that current to achieve the desired purge flow. The proportional purge solenoid controls the purge rate of fuel vapors from the vapor canister and fuel tank to the engine intake manifold.

IDLE AIR CONTROL MOTOR—PCM OUTPUT

DESCRIPTION

The Idle Air Control (IAC) motor is mounted on the throttle body. The PCM operates the idle air control motor (Fig. 13).

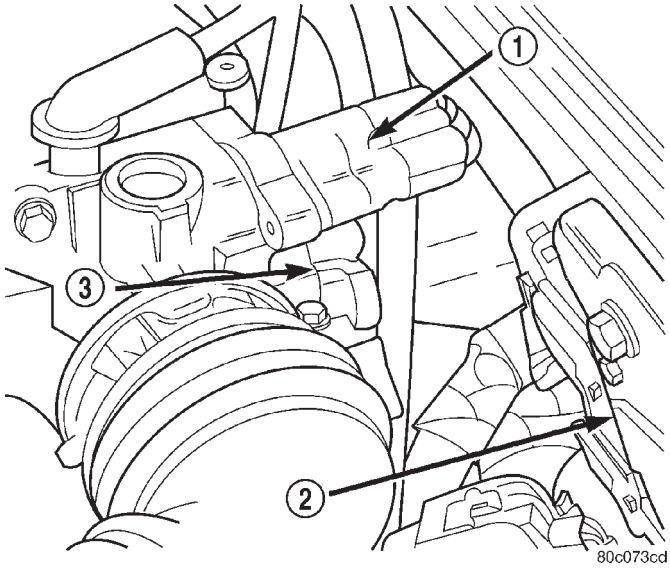

Fig. 13 Idle Air Control Motor—2.4L

1 – IAC
2 – PCM
3 – TPS

OPERATION

The PCM adjusts engine idle speed through the idle air control motor to compensate for engine load, coolant temperature or barometric pressure changes.

The throttle body has an air bypass passage that provides air for the engine during closed throttle idle. The idle air control motor pintle protrudes into the air bypass passage and regulates air flow through it.

The PCM adjusts engine idle speed by moving the IAC motor pintle in and out of the bypass passage. The adjustments are based on inputs the PCM receives. The inputs are from the throttle position sensor, crankshaft position sensor, coolant temperature sensor, MAP sensor, vehicle speed sensor and various switch operations (brake, park/neutral, air conditioning).

When engine rpm is above idle speed, the IAC is used for the following functions:

- Off-idle dashpot
- Deceleration air flow control
- A/C compressor load control (also opens the passage slightly before the compressor is engaged so that the engine rpm does not dip down when the compressor engages)

Target Idle

Target idle is determined by the following inputs:

- Gear position
- ECT Sensor
- Battery voltage
- Ambient/Battery Temperature Sensor
- VSS
- TPS
- MAP Sensor

DATA LINK CONNECTOR

DESCRIPTION

The data link connector is located inside the vehicle, under the instrument panel, at the driver's kick panel (Fig. 14).

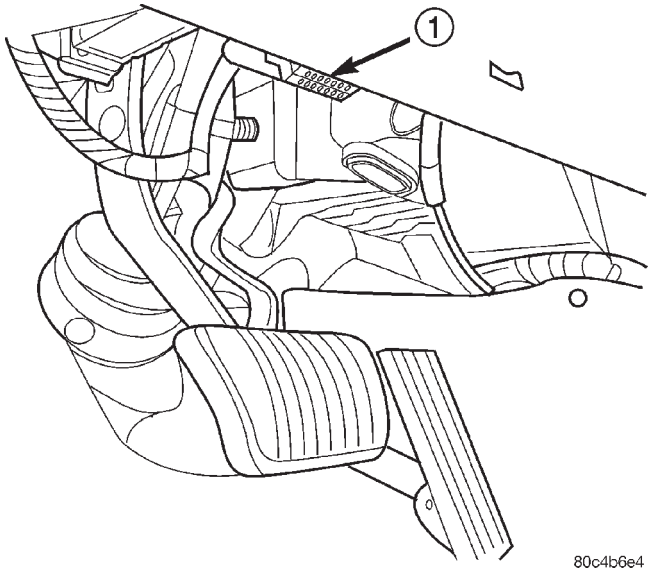

Fig. 14 Data Link (Diagnostic) Connector

1 – DATA LINK CONNECTOR

DESCRIPTION AND OPERATION (Continued)

OPERATION

The data link connector (diagnostic connector) links the DRB scan tool with the Powertrain Control Module (PCM). Refer to On-Board Diagnostics in the Emission Control section.

MALFUNCTION INDICATOR (CHECK ENGINE) LAMP—PCM OUTPUT

DESCRIPTION

Refer to the Instrument Panel Systems for more information.

OPERATION

The PCM supplies the malfunction indicator (check engine) lamp on/off signal to the instrument panel through the PCI Bus. The PCI Bus is a communications port. Various modules use the PCI Bus to exchange information.

The Check Engine lamp comes on each time the ignition key is turned ON and stays on for 3 seconds as a bulb test.

The Malfunction Indicator Lamp (MIL) stays on continuously, when the PCM has entered a Limp-In mode or identified a failed emission component. During Limp-in Mode, the PCM attempts to keep the system operational. The MIL signals the need for immediate service. In limp-in mode, the PCM compensates for the failure of certain components that send incorrect signals. The PCM substitutes for the incorrect signals with inputs from other sensors.

If the PCM detects active engine misfire severe enough to cause catalyst damage, it flashes the MIL. At the same time the PCM also sets a Diagnostic Trouble Code (DTC).

For signals that can trigger the MIL (Check Engine Lamp) refer to the On-Board Diagnostics section.

SCI TRANSMIT—PCM INPUT

OPERATION

SCI Transmit is the serial data communication transmit circuit to the DRB scan tool. The Powertrain Control Module (PCM) transmit data to the DRB through the SCI transmit circuit.

RADIATOR FAN RELAYS—PCM OUTPUT

DESCRIPTION

The radiator fan relays are located in the PDC. The inside top of the PDC cover has a label showing relay and fuse location.

OPERATION

The PCM energizes the radiator fans through either the low or high speed radiator fan relay. The PCM controls the ground circuit for the coil side of the relay. Power for both relay coils is supplied through a 10 amp fuse in the PDC. Power for both relay contacts is supplied power through a 40 amp fuse in the PDC. Refer to the Wiring Diagrams for circuit information.

The PCM monitors the A/C compressor discharge (high side) pressure through the air conditioning pressure transducer. Depending on engine coolant temperature and A/C system high side pressure, both fans operate at either low or high speed.

TACHOMETER—PCM OUTPUT

DESCRIPTION

Refer to the Instrument panel System for more information.

OPERATION

The tachometer receives its information across the PCI Bus from the Body Control Module (BCM). Information on engine RPM is transmitted from the Powertrain Control Module (PCM) across the PCI Bus to the BCM. The BCM calculates the position of the tachometer pointer based on the input from the PCM and adjusts the position of the gauge pointer to the necessary position. This signal is sent over the PCI Bus to the instrument cluster.

THROTTLE BODY

DESCRIPTION

The throttle body mounts to the intake manifold. The throttle position sensor and idle air control motor attach to the throttle body (Fig. 15).

OPERATION

At above idle conditions, air flow through the throttle body is controlled by a cable operated throttle blade. During closed throttle idle conditions, the idle air control motor control air flow. Refer to Idle Air Control Motor in this section.

REMOVAL AND INSTALLATION

THROTTLE BODY—2.4L ENGINES

REMOVAL

(1) Remove the air cleaner lid, disconnect the inlet air temperature sensor and makeup air hose.

(2) Remove the negative battery cable.

REMOVAL AND INSTALLATION (Continued)

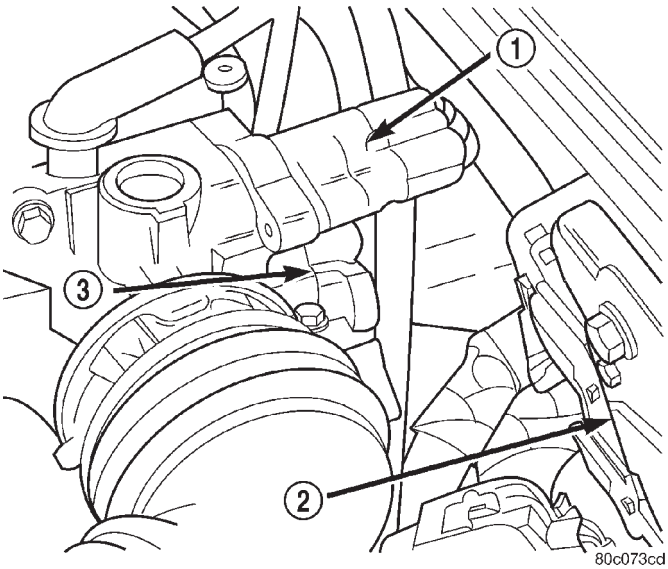

Fig. 15 Throttle Body—2.4L Engines

1 – IAC
2 – PCM
3 – TPS

(3) Remove the engine cover or throttle control shield if equipped.

(4) Remove throttle cable from the throttle body lever (Fig. 16) and (Fig. 17).

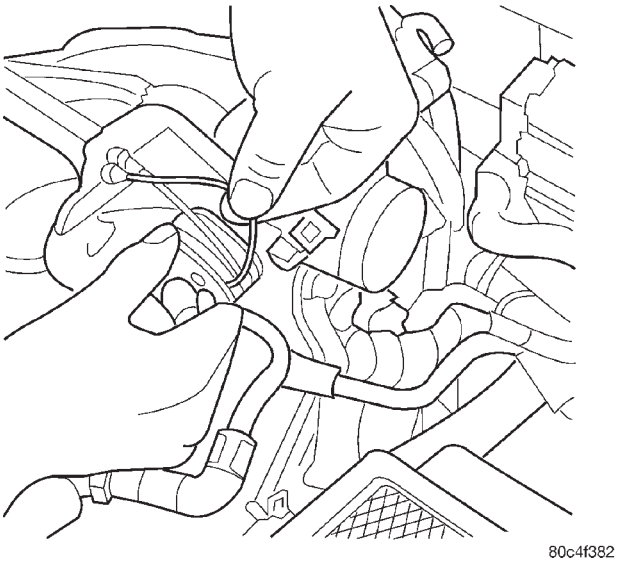

Fig. 16 Throttle Cable Attachment to Throttle Body

(5) Lift the retaining tabs on the cable and slide cable out of bracket.

(6) If equipped with speed control, remove speed control cable from throttle lever by sliding clasp out hole used for throttle cable.

(7) Remove EVAP purge hose from nipple on throttle body.

(8) Remove the electrical connectors from the throttle position sensor and idle air control motor.

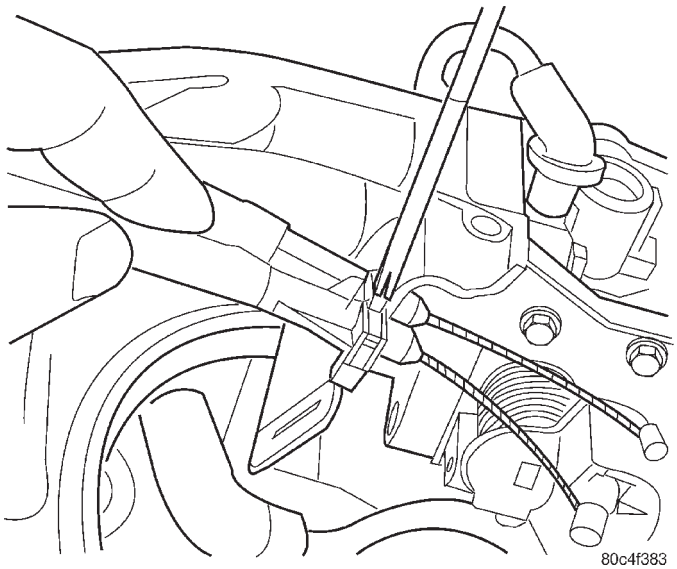

Fig. 17 Disconnecting Throttle Cable

(9) Remove 2 screws holding cable mounting bracket and support bracket.

(10) Remove throttle body mounting bolts (Fig. 18).

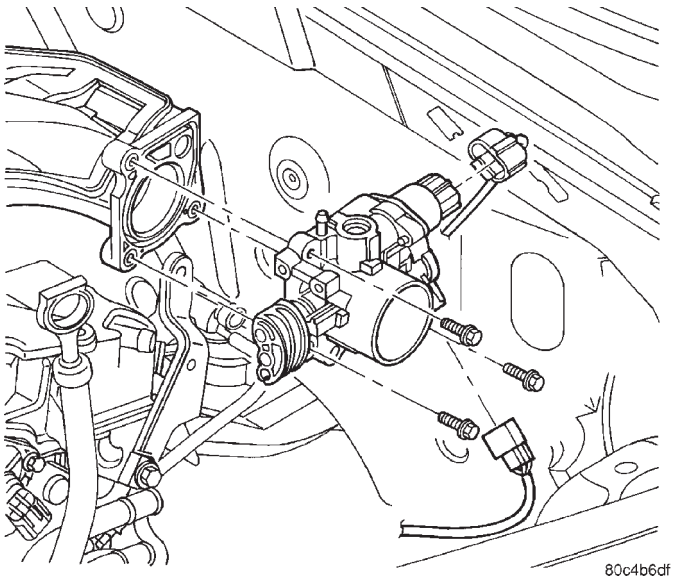

Fig. 18 Throttle Body Bolts

(11) Lift throttle body straight up and to remove the throttle body (Fig. 19).

INSTALLATION

(1) Attach electrical connectors to idle air control motor and throttle position sensor.

(2) Make sure that the throttle body gasket is inplace in the manifold.

(3) Position throttle body on intake and install mounting bolts (Fig. 19). Do Not tighten bolts at this time.

2001 PT Service Manual
Publication No. 81-370-1111
TSB 26-07-00 July, 2000

REMOVAL AND INSTALLATION (Continued)

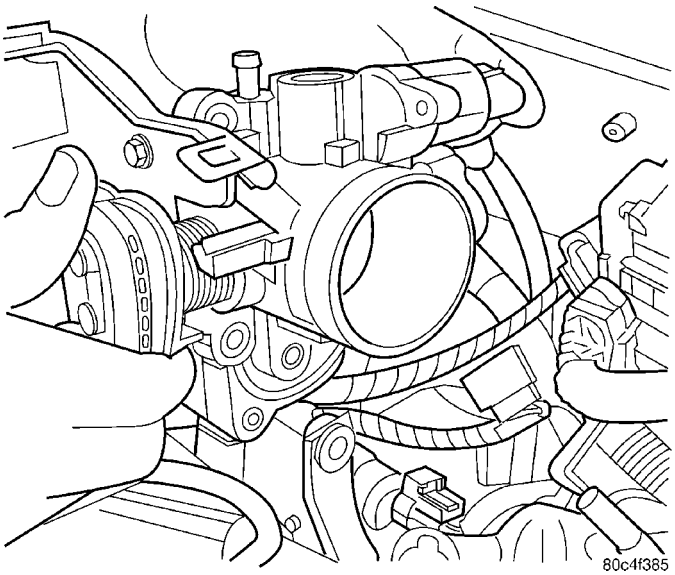

Fig. 19 Throttle Body Removal/Installation

(4) Install throttle cable bracket. Do Not tighten bolts at this time.

(5) Tighten throttle body bolts to 11.75 ±2.25 N·m (105 ±20 in. lbs.) torque.

(6) Tighten throttle cable bracket bolts to 11.75 ±2.25 N·m (105 ±20 in. lbs.) torque.

(7) Install EVAP purge hose to throttle body nipple.

(8) Install cable housing(s) retainer tabs into bracket (Fig. 17).

(9) Install throttle body cables by rotating the throttle lever forward to the wide open position (Fig. 16).

(10) Install throttle control shield.

(11) Install the negative battery cable.

(12) Install the air cleaner lid, connect the inlet air temperature sensor and makeup air hose.

THROTTLE POSITION SENSOR (TPS)—2.4L

The throttle position sensor attaches to the side of the throttle body (Fig. 20).

REMOVAL

(1) Remove the air cleaner lid and makeup air hose. Loosen the clamp and relocate assembly.

(2) Remove the negative battery cable.

(3) Disconnect electrical connector from the throttle position sensor.

(4) Remove throttle position sensor mounting screws.

(5) Remove throttle position sensor.

INSTALLATION

(1) The throttle shaft end of the throttle body slides into a socket in the TPS (Fig. 21). The socket has two tabs inside it. The throttle shaft rests against the tabs. When indexed correctly, the TPS can rotate clockwise a few degrees to line up the mounting screw holes with the screw holes in the throttle body. The TPS has slight tension when rotated into position. If it is difficult to rotate the TPS into position, reinstall the sensor with the throttle shaft on the other side of the tabs in the socket of the TPS. Tighten mounting screws to 6.2 N·m (55 in. lbs.) torque.

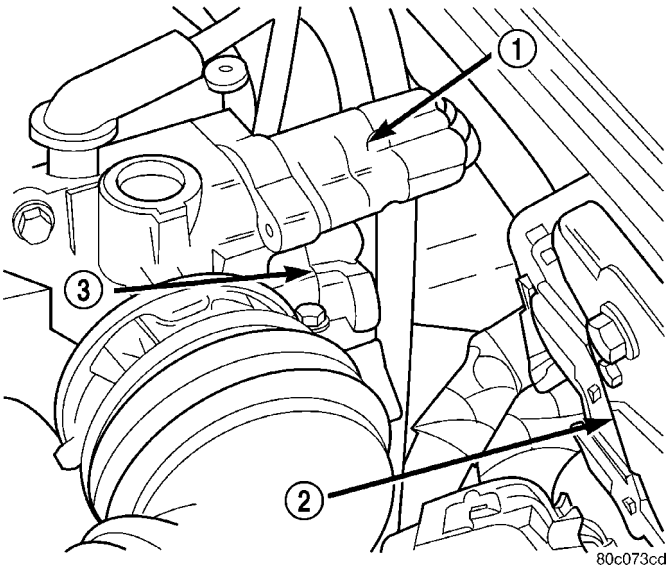

Fig. 20 Throttle Position Sensor and Idle Air Control Motor

1 – IAC
2 – PCM
3 – TPS

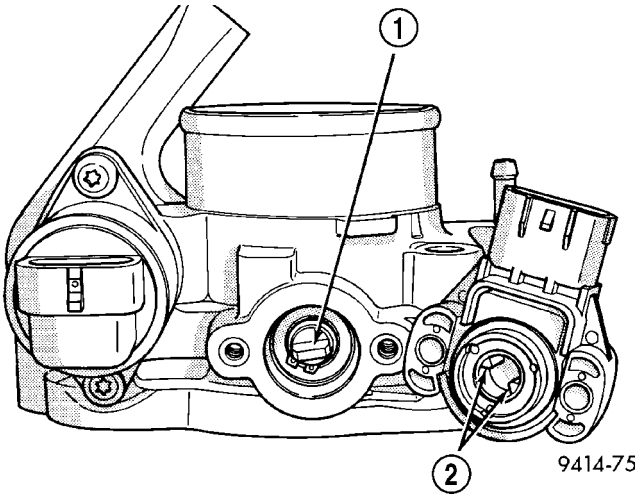

Fig. 21 Throttle Position Sensor Installation—Typical

1 – THROTTLE SHAFT
2 – TABS

REMOVAL AND INSTALLATION (Continued)

(2) After installing the TPS, the throttle plate should be closed. If the throttle plate is open, install the sensor on the other side of the tabs in the socket.

(3) Attach electrical connectors to the throttle position sensor.

(4) Install the negative battery cable.

(5) Install the air cleaner lid and makeup air hose and tighten clamp.

IDLE AIR CONTROL MOTOR—2.4L

The idle air control motor attaches to the side of the throttle body (Fig. 22).

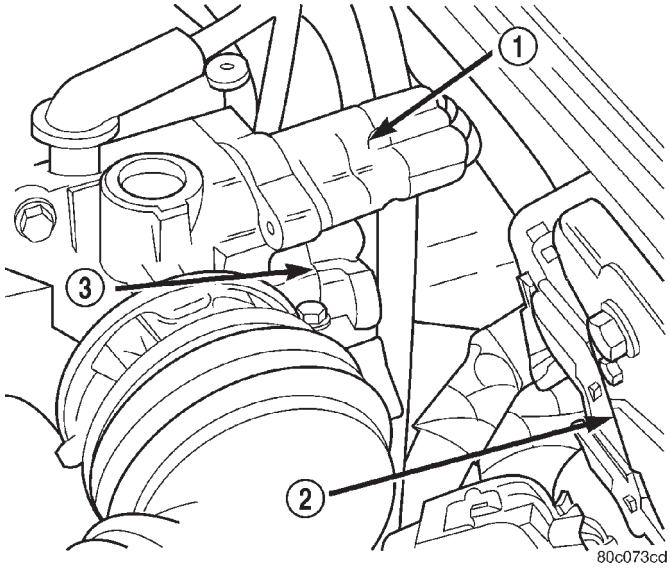

Fig. 22 Throttle Position Sensor and Idle Air Control Motor—2.4L

1 – IAC
2 – PCM
3 – TPS

REMOVAL

(1) Remove the air cleaner lid, disconnect the inlet air temperature sensor and makeup air hose.

(2) Remove the negative battery cable.

(3) Disconnect electrical connector from idle air control motor.

(4) Remove idle air control motor mounting screws.

(5) Remove idle air control motor. Ensure O-ring is removed with the motor.

INSTALLATION

(1) The new idle air control motor has a new O-ring installed on it. If pintle measures more than 1 inch (25 mm) it must be retracted. Use the DRB AIS Motor Open/Close Test to retract the pintle (battery must be connected.)

(2) Carefully place idle air control motor into throttle body.

(3) Install mounting screws. Tighten screws to: 6.2 N·m (55 in. lbs.) torque.

(4) Attach electrical connectors to idle air control motor.

(5) Install the negative battery cable.

(6) Install the air cleaner lid, connect the inlet air temperature sensor and makeup air hose.

INLET AIR TEMPERATURE SENSOR

The sensors is in the air inlet tube.

REMOVAL

(1) Remove the air cleaner lid, disconnect the inlet air temperature sensor and makeup air hose.

(2) Disconnect the negative battery cable.

(3) Disconnect electrical connector from the sensor (Fig. 23).

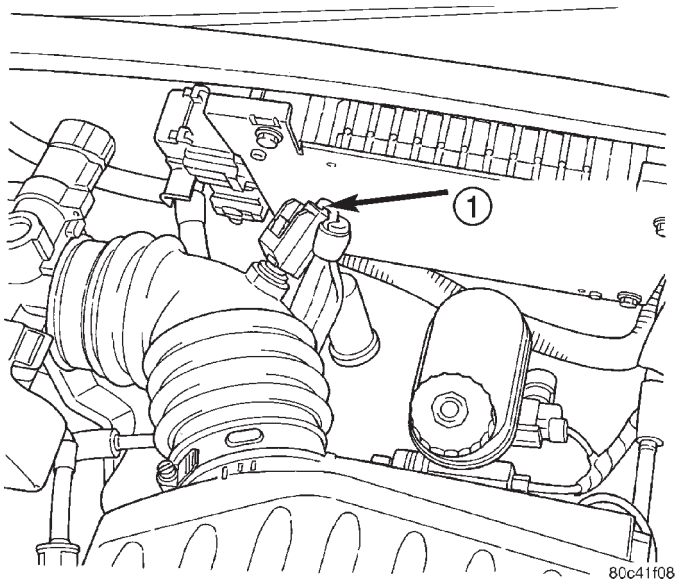

Fig. 23 Inlet Air Temperature Sensor

1 – INLET AIR TEMPERATURE SENSOR

(4) Remove the sensors.

INSTALLATION

(1) Install sensor.

(2) Attach electrical connector to sensor.

(3) Connect the negative battery cable.

(4) Install the air cleaner lid, connect the inlet air temperature sensor and makeup air hose.

MAP SENSOR

The MAP sensor attaches to the intake manifold plenum (Fig. 24).

REMOVAL

(1) Remove the air cleaner lid and makeup air hose.

(2) Remove the negative battery cable.

REMOVAL AND INSTALLATION (Continued)

(3) Disconnect the electrical connector from the MAP sensor.
(4) Remove sensor mounting screws.
(5) Remove sensor.

INSTALLATION

(1) Insert sensor into intake manifold while making sure not to damage O-ring seal.
(2) Tighten mounting screws to 2 N·m (20 in. lbs) torque for plastic manifold.
(3) Attach electrical connector to sensor.
(4) Install the negative battery cable.
(5) Install the air cleaner lid and makeup air hose.

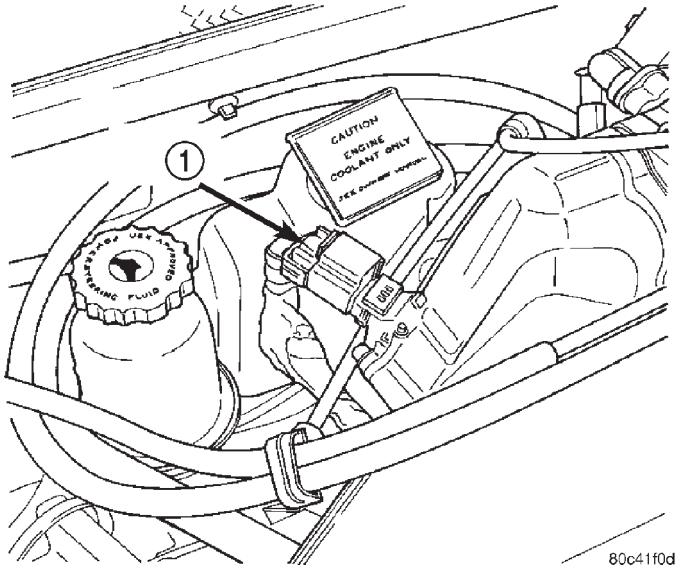

Fig. 24 MAP Sensor

1 – MAP SENSOR

POWERTRAIN CONTROL MODULE

The PCM engine control strategy prevents reduced idle speeds until after the engine operates for 320 km (200 miles). If the PCM is replaced after 320 km (200 miles) of usage, update the mileage and vehicle identification number (VIN) in the new PCM. Use the DRB scan tool to change the millage and VIN in the PCM. If this step is not done a Diagnostic Trouble Code (DTC) may be set. Refer to the appropriate Powertrain Diagnostic Manual and the DRB scan tool.

The PCM attaches to a bracket welded on the dash panel (Fig. 25).

REMOVAL

(1) Remove the air cleaner lid, disconnect the inlet air temperature sensor and makeup air hose.
(2) Remove the negative battery cable.
(3) Remove screws attaching PCM to dashpanel bracket (Fig. 26).

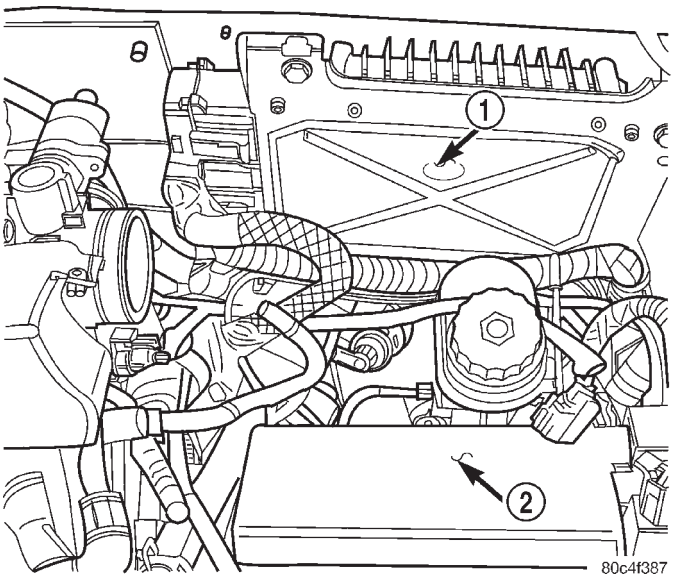

Fig. 25 PCM

1 – PCM
2 – PDC

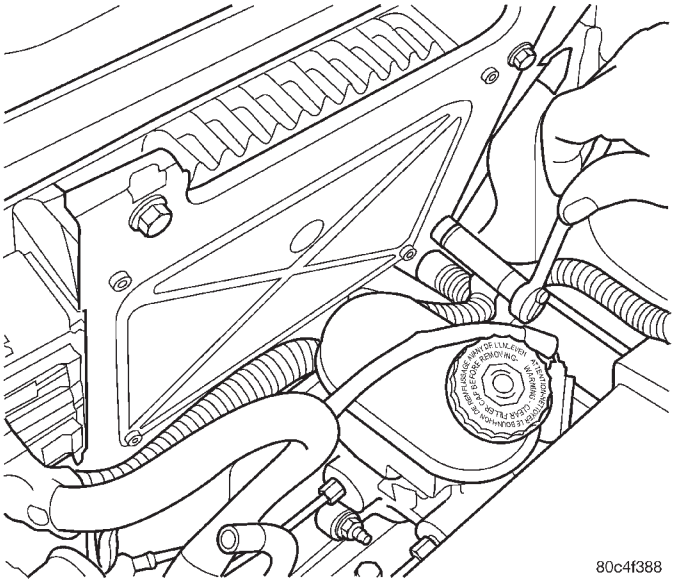

Fig. 26 PCM Screws

(4) Unlock the connector then disconnect both 40-way connectors from the PCM (Fig. 27).
(5) Lift PCM up to remove it from vehicle.

INSTALLATION

(1) Install PCM. Tighten mounting screws to 10.7 N·m (95 ins. lbs.) (Fig. 26).
(2) Attach both 40-way connectors to PCM. Lock the tabs (Fig. 27).
(3) Install the negative battery cable.
(4) Install the air cleaner lid, connect the inlet air temperature sensor and makeup air hose.

REMOVAL AND INSTALLATION (Continued)

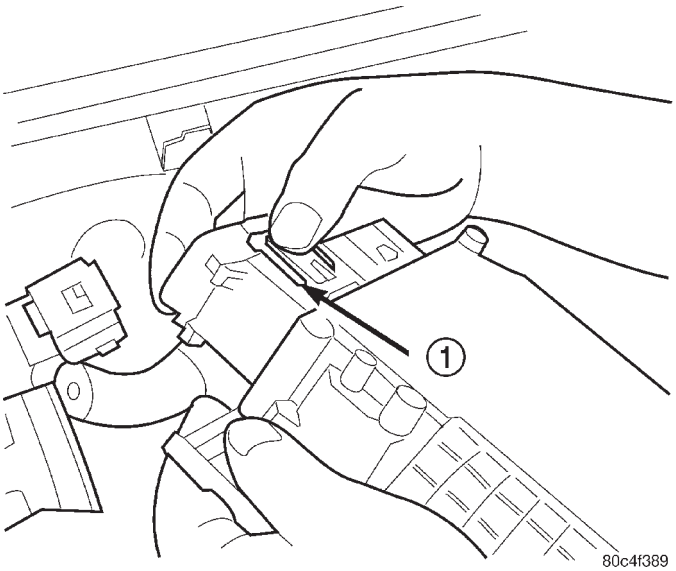

Fig. 27 Locking Tabs

1 – LOCKING TAB

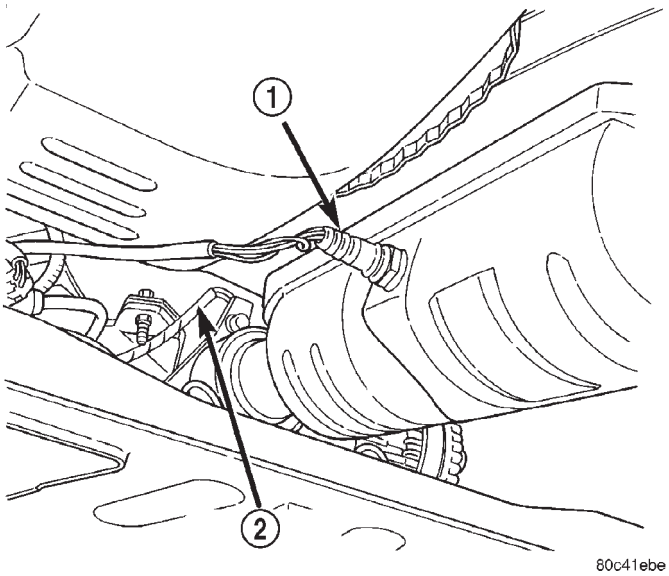

Fig. 28 Oxygen Sensor 1/1 Upstream

1 – DOWN STREAM O2 SENSOR
2 – UP STREAM O2 SENSOR

OXYGEN SENSOR 1/1 UPSTREAM—2.4L

REMOVAL

(1) Remove the air cleaner lid and makeup air hose.
(2) Remove the negative battery cable.
(3) Disconnect electrical connector from sensor.
(4) Remove sensor using an oxygen sensor special tool C-4907 (Fig. 28).

INSTALLATION

(1) After removing the sensor, the exhaust manifold threads must be cleaned with an 18 mm X 1.5 + 6E tap. If reusing the original sensor, coat the sensor threads with an anti-seize compound such as Loctite® 771-64 or equivalent. New sensors have compound on the threads and do not require an additional coating. Tighten the sensor to 28 N·m (20 ft. lbs.) torque.
(2) Connect electrical connector to sensor.
(3) Install the negative battery cable.
(4) Install the air cleaner lid and makeup air hose.

OXYGEN SENSOR 1/2 DOWNSTREAM

The downstream heated oxygen sensor threads into the exhaust pipe behind the catalytic convertor (Fig. 29).

REMOVAL

(1) Remove the air cleaner lid and makeup air hose.
(2) Remove the negative battery cable.
(3) Raise vehicle and support.
(4) Disconnect electrical connector from sensor.

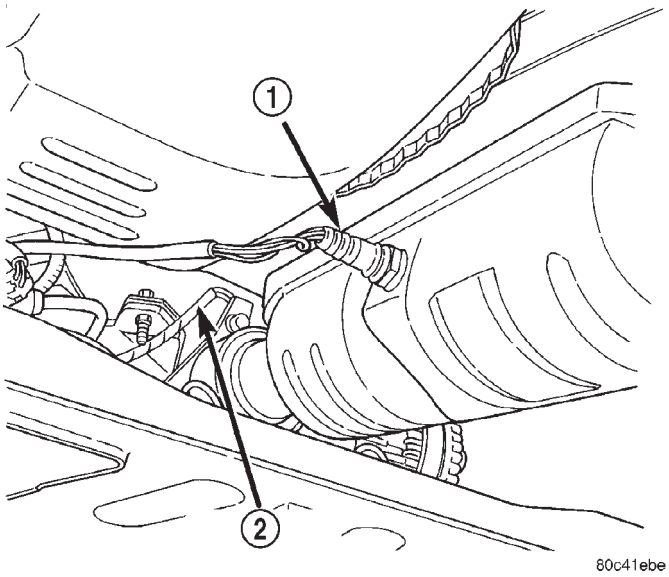

Fig. 29 Oxygen Sensor 1/2 Downstream

1 – DOWN STREAM O2 SENSOR
2 – UP STREAM O2 SENSOR

(5) Disconnect sensor electrical harness from clips along body.
(6) Remove sensor using an oxygen sensor crow foot wrench such as Snap-On tool YA8875 or equivalent (Fig. 30).

INSTALLATION

(1) After removing the sensor, the exhaust manifold threads must be cleaned with an 18 mm X 1.5 + 6E tap. If reusing the original sensor, coat the sensor

REMOVAL AND INSTALLATION (Continued)

threads with an anti-seize compound such as Loctite® 771-64 or equivalent. New sensors have compound on the threads and do not require an additional coating. Tighten the sensor to 28 N·m (20 ft. lbs.) torque.

(2) Connect sensor electrical harness to clips along body.

(3) Connect electrical connector to sensor.

(4) Lower vehicle.

(5) Install the negative battery cable.

(6) Install the air cleaner lid and makeup air hose.

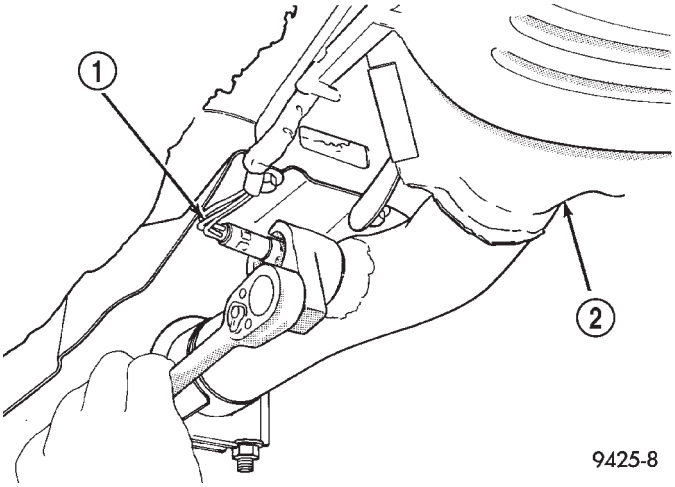

Fig. 30 Oxygen Sensor 1/2 Downstream

1 – DOWNSTREAM HEATED OXYGEN SENSOR
2 – CATALYTIC CONVERTOR

AIR CLEANER

The air cleaner housing attaches to the inner fender in front of the driver's side strut tower (Fig. 31). An ambient air duct supplies underhood air for the engine. It attaches to the lower air cleaner box.

Make sure that the rubber grommets, for the lower pins, are in place when reinstalling the air cleaner box. The rubber grommet for the PDC bracket must be installed also.

FILTER ELEMENT REPLACEMENT

REMOVAL

(1) Unfasten clasps on sides of air cleaner housing cover. Lift cover off air cleaner housing (Fig. 32).

(2) Remove filter element.

(3) If necessary, clean the inside of the air cleaner housing.

INSTALLATION

(1) Install new filter element.

(2) Place cover over air cleaner housing. Snap clasps in place.

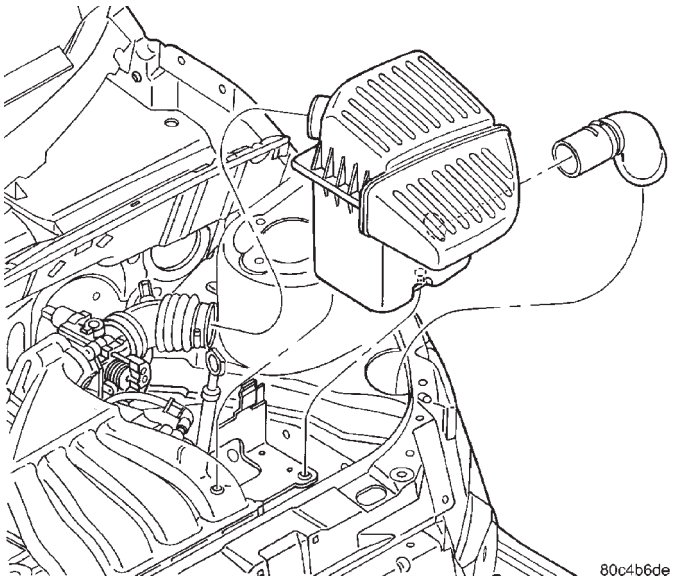

Fig. 31 Air Inlet System

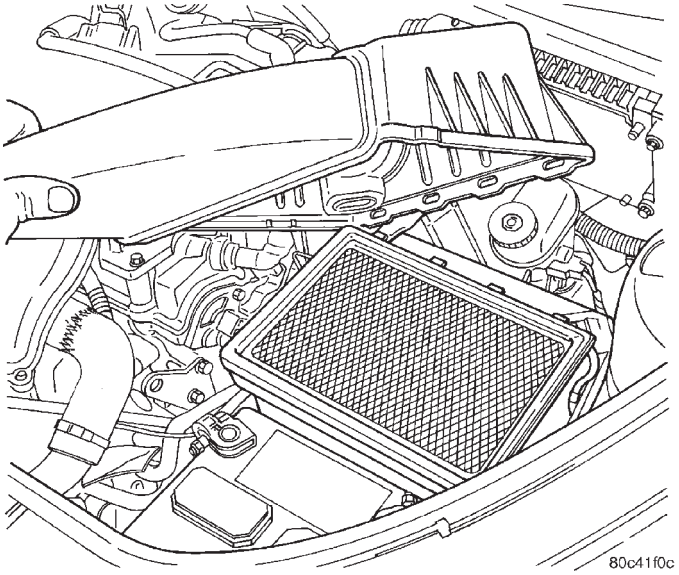

Fig. 32 Air Cleaner Cover

ENGINE COOLANT TEMPERATURE SENSOR

The engine coolant temperature sensor threads into the front of the cylinder head (Fig. 33).

REMOVAL

(1) Remove the air cleaner lid and makeup air hose.

(2) Remove the negative battery cable.

(3) With the engine cold, drain coolant until level drops below sensor level. Refer to the Cooling System section.

(4) Disconnect coolant sensor electrical connector.

(5) Remove coolant sensor.

REMOVAL AND INSTALLATION (Continued)

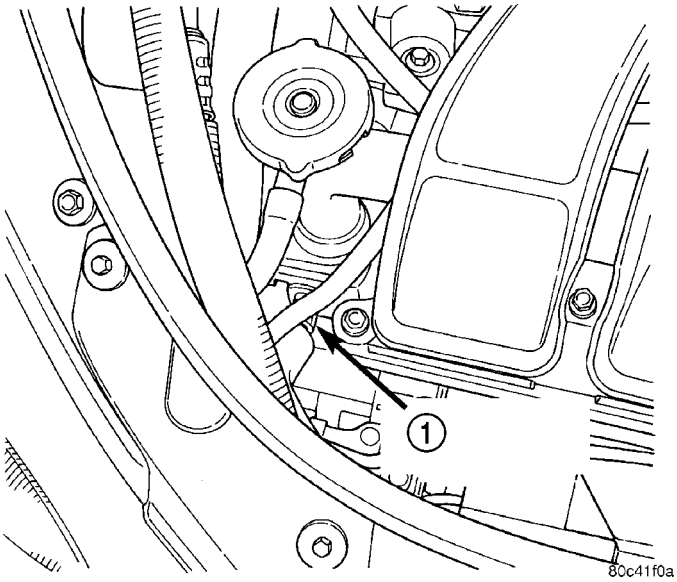

Fig. 33 Engine Coolant Temperature Sensor—2.4L Engine

1 – COOLANT TEMPERATURE SENSOR

INSTALLATION

(1) Install coolant sensor. Tighten sensor to: 19± 2 N·m (14± 2 ft. lbs.) torque.

(2) Attach electrical connector to sensor.

(3) Fill cooling system. Refer to the Cooling System section.

(4) Install the negative battery cable.

(5) Install the air cleaner lid and makeup air hose.

SPECIFICATIONS

VEHICLE EMISSION CONTROL INFORMATION LABEL

DESCRIPTION

All models have a Vehicle Emission Control Information (VECI) Label. Chrysler permanently attaches the label in the engine compartment. It cannot be removed without defacing information and destroying the label.

The label contains the vehicle's emission specifications and vacuum hose routings. All hoses must be connected and routed according to the label.

TORQUE

DESCRIPTION	TORQUE
Camshaft Position Semsor	12 N·m (105 in. lbs.)
Crankshaft Position Sensor	12 N·m (105 in. lbs.)
Engine Coolant Temperature Sensor	19 N·m (14 ft. lbs.)
IAC Motor-To-Throttle Body Bolts	6.2 N·m (55 in. lbs.)
MAP Sensor Mounting Screws	2 N·m (20 in. lbs.)
Oxygen Sensor	28 N·m (20 ft. lbs.)
Powertrain Control Module (PCM) Mounting Screws	4 N·m (35 in. lbs.)
Throttle Body Mounting Bolts	11.75 ±2.25 N·m (105 ±20 in. lbs.)
Throttle Position Sensor	6.2 N·m (55 in. lbs.)
Throttle Cable Bracket Bolts	11.7 N·m (105 in. lbs.)

SPECIAL TOOLS

FUEL

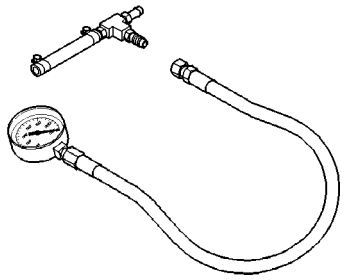

Pressure Gauge Assembly C–4799–B

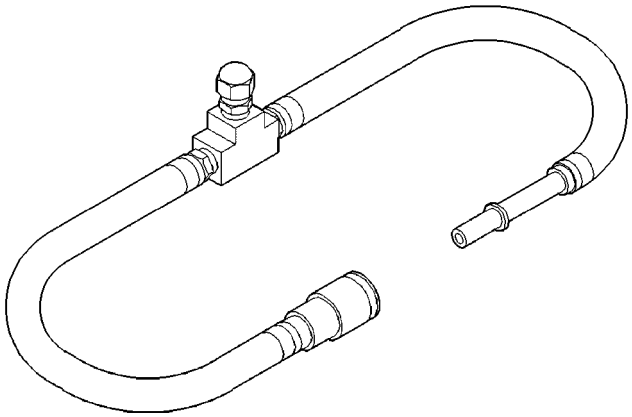

Fuel Pressure Test Adapter 6539

SPECIAL TOOLS (Continued)

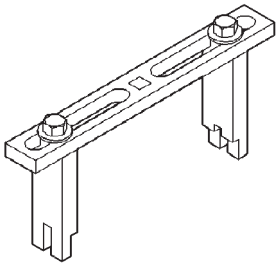

Spanner Wrench 6856

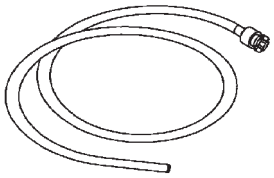

Fuel Line Adapter 1/4

O2S (Oxygen Sensor) Remover/Installer—C-4907

STEERING

TABLE OF CONTENTS

page

POWER STEERING 1
POWER STEERING PUMP 18
STEERING GEAR 26
STEERING COLUMN 34

POWER STEERING

TABLE OF CONTENTS

page

DESCRIPTION AND OPERATION
POWER STEERING SYSTEM 1
POWER STEERING FLUID HOSES 1
POWER STEERING FLUID COOLER 2
POWER STEERING FLUID PRESSURE SWITCH 3
DIAGNOSIS AND TESTING
STEERING SYSTEM DIAGNOSIS CHARTS 3
POWER STEERING FLOW AND PRESSURE TEST 8
SERVICE PROCEDURES
POWER STEERING FLUID LEVEL CHECKING . . 10
REMOVAL AND INSTALLATION
SERVICE WARNINGS AND CAUTIONS 10
POWER STEERING FLUID PRESSURE HOSE . . 10
POWER STEERING FLUID RETURN HOSE 13
POWER STEERING FLUID SUPPLY HOSE 14
POWER STEERING FLUID COOLER 15
POWER STEERING FLUID PRESSURE SWITCH 16
SPECIFICATIONS
POWER STEERING FASTENER TORQUE 17
SPECIAL TOOLS
POWER STEERING 17

DESCRIPTION AND OPERATION

POWER STEERING SYSTEM

DESCRIPTION

This vehicle comes with power steering as standard equipment and it is the only steering system available. The power steering system consists of these major components:

- Power Steering Pump
- Power Steering Gear
- Power Steering Fluid Reservoir
- Power Steering Fluid Supply Hose
- Power Steering Fluid Pressure Hose
- Power Steering Fluid Return Hose

For information on the first two components, refer to their respective sections within this service manual group. Information on the third component can be found in Power Steering Pump. Information on all other components can be found in this section of this service manual group.

OPERATION

Turning of the steering wheel is converted into linear (side-to-side) travel through the meshing of the helical pinion teeth with the rack teeth within the steering gear. The lateral travel pushes and pulls the tie rods to change the direction of the vehicle's front wheels.

Power assist steering is provided by a belt driven rotary type pump. It directs fluid through power steering fluid hoses to the power steering gear where it is used to assist the driver's turning effort.

Manual steering control of the vehicle can be maintained if power steering assist is lost. However, under this condition, steering effort is significantly increased.

POWER STEERING FLUID HOSES

DESCRIPTION

The power steering fluid supply hose is a formed hose that connects the power steering fluid reservoir to the power steering pump. It is secured at both ends using standard adjustable clamps.

DESCRIPTION AND OPERATION (Continued)

The power steering fluid pressure hose is a high pressure hose and tube that connects the power steering pump to the power steering gear. At both ends of the flexible hose portion are steel fittings that are pressure crimped to the flexible hose. A standard tube nut fitting with an O-ring is used at both ends to connect the components.

The power steering fluid return hose is a hose that connects the power steering fluid cooler back to the power steering fluid reservoir. The hose is fastened to the cooler outlet tube using a standard adjustable clamp. The return hose is secured to the fluid reservoir using a standard adjustable clamp.

OPERATION

The power steering fluid hoses connect the components of the power steering system. They transfer fluid from one component to the next.

POWER STEERING FLUID COOLER

DESCRIPTION

All models of this vehicle are equipped with a cooler for the power steering system fluid (Fig. 1). The power steering fluid cooler is located at the front of the front suspension crossmember. It is mounted to the crossmember top surface using 2 fasteners.

The cooler is placed in series with the power steering fluid return hose, between the steering gear fluid outlet port and the fluid return hose leading to the power steering fluid reservoir. The power steering gear has a steel fitting attached to its outlet port that a short hose leading to the cooler is pushed onto. This hose is secured to both the steering gear outlet fitting and the cooler using standard adjustable clamps. The cooler is secured to the power steering fluid return hose using a standard adjustable clamp.

OPERATION

The purpose of the cooler is to keep the temperature of the power steering system fluid from rising to a level that would affect the performance of the power steering system.

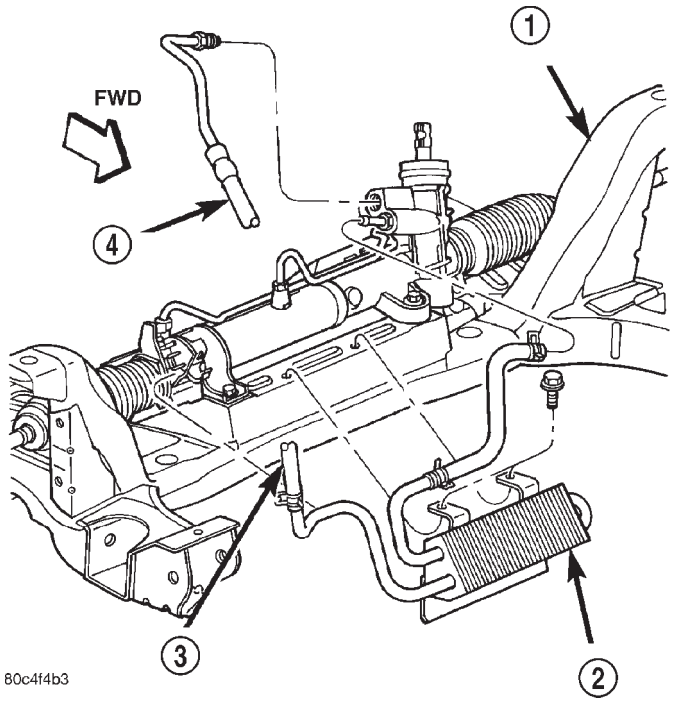

Fig. 1 Power Steering Fluid Cooler

1 – CROSSMEMBER
2 – COOLER
3 – RETURN HOSE
4 – PRESSURE HOSE

The cooler used on this vehicle is referred to as a fluid-to-air type cooler. This means that the air flow across the tubes of the cooler is used to extract the heat from the cooler which it has absorbed from the power steering fluid flowing through it. Utilizing a small air dam mounted to its base to redirect air across its coils, the cooler lowers the temperature of the power steering fluid prior to it entering the power steering fluid reservoir where it is resupplied to the power steering pump.

DESCRIPTION AND OPERATION (Continued)

POWER STEERING FLUID PRESSURE SWITCH

DESCRIPTION

A power steering pressure switch is used to improve the vehicle's idle quality. The pressure switch improves vehicle idle quality by causing a readjustment of the engine idle speed as necessary when increased fluid pressure is sensed in the power steering system.

The power steering pressure switch is mounted directly to the power steering gear (Fig. 2).

OPERATION

The pressure switch functions by signaling the powertrain control module that an increase in pressure of the power steering system is putting additional load on the engine. This type of condition exists when the front tires of the vehicle are turned while the vehicle is stationary and the engine is at idle speed. When the powertrain control module receives the signal from the power steering pressure switch, it directs the engine to increase its idle speed. This increase in engine idle speed compensates for the additional load, thus maintaining the required engine idle speed and idle quality.

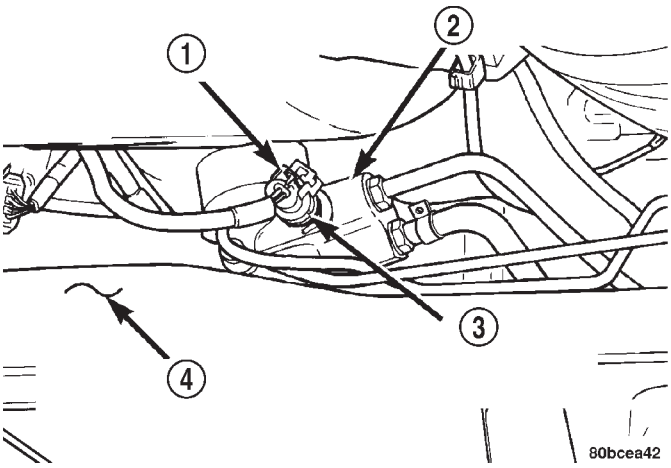

Fig. 2 Switch Location

1 – WIRING HARNESS CONNECTOR
2 – POWER STEERING GEAR
3 – POWER STEERING FLUID PRESSURE SWITCH
4 – REAR OF FRONT SUSPENSION CROSSMEMBER

DIAGNOSIS AND TESTING

STEERING SYSTEM DIAGNOSIS CHARTS

NOTE: There are three diagnosis charts following that cover the topics Power Steering Noise, Steering Wheel Feel, and Power Steering Fluid.

POWER STEERING NOISE

CONDITION	POSSIBLE CAUSES	CORRECTION
OBJECTIONABLE HISS OR WHISTLE*	1. Damaged or mispositioned steering column shaft/coupling dash panel seal.	1. Reposition or replace steering column shaft/coupling dash panel seal.
	2. Noisy valve in power steering gear.	2. Replace power steering gear.
RATTLE OR CLUNK	1. Power steering gear loose on front suspension crossmember.	1. Inspect power steering gear mounting bolts. Replace as necessary. Tighten to the specified torque.
	2. Front suspension crossmember mounting fasteners loose at frame.	2. Tighten the front suspension crossmember mounting fasteners to the specified torque.
	3. Loose tie rod (outer or inner).	3. Check tie rod pivot points for wear. Replace worn/loose parts as required.

DIAGNOSIS AND TESTING (Continued)

CONDITION	POSSIBLE CAUSES	CORRECTION
	4. Loose lower control arm mounting bolts at front suspension crossmember.	4. Tighten control arm mounting bolts to the specified torques.
	5. Loose strut assembly mounting fasteners at strut tower.	5. Tighten strut assembly fasteners to the specified torques.
	6. Power steering fluid pressure hose touching the body of the vehicle.	6. Adjust hose to proper position by loosening, repositioning, and tightening fitting to specified torque. Do not bend tubing.
	7. Internal power steering gear noise.	7. Replace power steering gear.
	8. Damaged front suspension crossmember.	8. Replace front suspension crossmember.
CHIRP OR SQUEAL (POWER STEERING PUMP)	1. Loose power steering pump drive belt.	1. Check and replace automatic belt tensioner as necessary. Replace belt if worn or glazed.
WHINE OR GROWL (POWER STEERING PUMP) **	1. Low fluid level.	1. Fill power steering fluid reservoir to proper level and check for leaks.
	2. Power steering hose touching vehicle body or frame.	2. Adjust hose to proper position by loosening, repositioning, and tightening fitting to specified torque. Do not bend tubing. Replace hose if damaged.
	3. Extreme wear of power steering pump internal components.	3. Replace power steering pump and flush system as necessary.
SUCKING AIR SOUND	1. Loose clamp on power steering fluid return hose.	1. Tighten or replace hose clamp.
	2. Missing O-Ring on power steering hose connection.	2. Inspect connection and replace O-Ring as required.
	3. Low power steering fluid level.	3. Fill power steering fluid reservoir to proper level and check for leaks.
	4. Air leak between power steering fluid reservoir and power steering pump.	4. Replace power steering pump (with reservoir).
SQUEAK OR RUBBING SOUND	1. Steering column shroud rubbing.	1. Realign shrouds as necessary.
	2. Steering column shaft rubbing.	2. Move or realign item rubbing shaft.
	3. Steering column shaft dry-rubbing seal at dash panel.	3. Lubricate contact surface.
	4. Steering gear internally noisy.	4. Replace steering gear.
SCRUBBING OR KNOCKING NOISE.	1. Incorrect tire or wheel size.	1. Replace incorrect size tire or wheel with size used as original equipment.
	2. Interference between steering gear and other vehicle components.	2. Check for bent or misaligned components and correct as necessary.
	3. Steering gear internal stops worn excessively.	3. Replace steering gear.

DIAGNOSIS AND TESTING (Continued)

NOTE: * There is some noise in all power steering systems. One of the most common is a hissing sound evident when turning the steering wheel when at a standstill or when parking and the steering wheel is at the end of its travel. Hiss is a very high frequency noise similar to that experienced while slowly closing a water tap. The noise is present in every valve and results when high velocity fluid passes valve orifice edges. There is no relationship between this noise and the performance of the steering system.

NOTE: ** Power steering pump growl results from the development of high pressure fluid flow. Normally this noise level should not be high enough to be objectionable.

STEERING WHEEL FEEL

CONDITION	POSSIBLE CAUSES	CORRECTION
STEERING WHEEL/ COLUMN CLICKING, CLUNKING OR RATTLING.	1. Steering column preload is not set properly.	1. Loosen steering column coupling pinch bolt to reset steering column preload. Replace pinch bolt and torque to specifications.
	2. Loose steering coupling pinch bolt.	2. Replace pinch bolt and torque to specifications.
	3. Steering column bearings.	3. Replace steering column.
STEERING WHEEL HAS FORE AND AFT LOOSENESS.	1. Steering wheel retaining nut not properly tightened and torqued.	1. Tighten the steering wheel retaining nut to its specified torque.
	2. Steering column preload is not set properly.	2. Loosen steering column coupling pinch bolt to reset steering column preload. Replace pinch bolt and torque to specifications.
	3. Steering column lower bearing spring retainer slipped on steering column shaft.	3. Replace steering column.
STEERING WHEEL OR DASH VIBRATES DURING LOW SPEED OR STANDSTILL STEERING MANEUVERS.	1. Air in the fluid of the power steering system.	1. Bleed air from system following the power steering pump initial operation service procedure.*
	2. Tires not properly inflated.	2. Inflate tires to the specified pressure.
	3. Excessive engine vibration.	3. Ensure that the engine is running properly.
	4. Loose tie rod end jam nut.	4. Tighten the inner to outer tie rod jam nut to the specified torque.
	5.Overcharged air conditioning system.	5.Check air conditioning pump head pressure and correct as necessary.
STEERING CATCHES, STICKS IN CERTAIN POSITIONS OR IS DIFFICULT TO TURN.	1. Low power steering fluid level.	1. Fill power steering fluid reservoir to specified level and check for leaks.
	2. Tires not inflated to specified pressure.	2. Inflate tires to the specified pressure.

DIAGNOSIS AND TESTING (Continued)

CONDITION	POSSIBLE CAUSES	CORRECTION
	3. Lack of lubrication in front suspension control arm ball joints.	3. Lubricate ball joints if ball joints are not a lubricated for life type ball joint. If ball joint is a lubricated for life ball joint, replace ball joint or control arm.
	4. Lack of lubrication in steering gear outer tie rod ends.	4. Lubricate tie rod ends if they are not a lubricated for life type. If tie rod end is a lubricated for life type, replace tie rod end.
	5. Loose power steering pump drive belt.	5. Check and replace automatic belt tensioner as necessary. If drive belt is worn or glazed, replace belt.
	6. Faulty power steering pump flow control (Follow Power Steering System Flow and Pressure Test procedure).	6. Replace power steering pump.
	7. Excessive friction in steering column or intermediate shaft.	7. Isolate and correct condition.
	8. Binding upper strut bearing.	8. Disassemble strut assembly. Correct binding condition in strut bearing or replace bearing.
	9. Excessive friction in power steering gear.	9. Replace power steering gear.
STIFF, HARD TO TURN, SURGE, MOMENTARY INCREASE IN EFFORT WHEN TURNING.	1. Tires not properly inflated.	1. Inflate tires to specified pressure.
	2. Low power steering fluid level.	2. Add power steering fluid as required to power steering fluid reservoir to obtain proper level. Check for leaks.
	3. Loose power steering pump drive belt.	3. Check and replace automatic belt tensioner as necessary. If drive belt is worn or glazed, replace belt.
	4. Lack of lubrication in control arm ball joints.	4. Lubricate ball joints if ball joints are not a lubricated for life type ball joint. If ball joint is a lubricated for life ball joint, replace ball joint or control arm.
	5. Low power steering pump pressure (Follow Power Steering System Flow and Pressure Test procedure).	5. Replace the power steering pump as necessary.
	6. High internal leak in power steering gear (Follow Power Steering System Flow and Pressure Test procedure).	6. Replace power steering gear.
STEERING WHEEL DOES NOT RETURN TO CENTER POSITION.	1. Tires not inflated properly.	1. Inflate tires to specified pressure.
	2. Improper front wheel alignment.	2. Check and adjust wheel alignment as necessary.

DIAGNOSIS AND TESTING (Continued)

CONDITION	POSSIBLE CAUSES	CORRECTION
	3. Lack of lubrication in front suspension control arm ball joints.	3. Lubricate ball joints if ball joints are not a lubricated for life type of ball joint. If ball joint is a lubricated for life ball joint, replace ball joint or control arm.
	4. Steering column coupling joints misaligned.	4. Realign steering column coupling joints.
	5. Steering wheel rubbing.**	5. Adjust steering column shrouds to eliminate rubbing condition.
	6. Damaged, mis-positioned or un-lubricated steering column coupler to dash seal.**	6. Replace, reposition, or lubricate dash seal.
	7. Binding upper strut bearing.	7. Disassemble strut assembly. Correct binding condition in strut bearing or replace bearing.
	8. Tight shaft bearing in steering column.	8. Replace the steering column.
	9. Excessive friction in steering column coupling.	9. Replace steering column coupling.
	10. Excessive friction in power steering gear.	10. Replace power steering gear.
EXCESSIVE STEERING WHEEL KICKBACK OR TOO MUCH STEERING WHEEL FREE PLAY.	1. Air in the fluid of the power steering system.	1. Bleed air from system following the the power steering pump initial operation service procedure.*
	2. Power steering gear loose on front suspension crossmember.	2. Inspect power steering gear mounting bolts. Replace as necessary. Tighten to the specified torque.
	3. Steering column coupling worn, broken or loose.	3. Replace steering column coupling.
	4. Free play in steering column.	4. Check all components of the steering system and repair or replace as required.
	5. Worn control arm ball joints.	5. Replace ball joint or control arm as required.
	6. Loose steering knuckle to ball joint stud pinch bolt.	6. Inspect pinch bolts, replace as necessary, and tighten to specified torque.
	7. Front wheel bearings loose or worn.	7. Replace wheel bearing or knuckle as necessary.
	8. Loose outer tie rod ends.	8. Replace outer tie rod ends that have excessive free play.
	9. Loose inner tie rod ends.	9. Replace power steering gear.
	10 Defective steering gear rotary valve.	10. Replace power steering gear.

NOTE: * Steering shudder can be expected in new vehicles and vehicles with recent steering system repairs. Shudder should dissipate after the vehicle has been driven several weeks.

DIAGNOSIS AND TESTING (Continued)

NOTE: ** To evaluate this condition, it may be necessary to disconnect the coupling at the base of the steering column. Turn the steering wheel and feel or listen for internal rubbing in steering column. To avoid damaging the column clockspring, note the following. Before disconnecting coupling, place tires in the straight-ahead position and center steering wheel. Once disconnected, DO NOT rotate steering wheel more than one revolution in either direction and place steering wheel in original location before reconnecting coupling. If this position is lost, the steering column clockspring must be re-centered following the procedure found within the procedure for steering column installation in the steering column section.

POWER STEERING FLUID

CONDITION	POSSIBLE CAUSES	CORRECTION
LOW FLUID LEVEL WITH VISIBLE LEAK.	1. Loose power steering hose fittings.	1. Tighten the fitting to its specified torque.
	2. Damaged or missing fitting seal, gasket, or O-ring.	2. Replace as necessary.
	3. Power steering pump or power steering gear leaking.	3. Repair or replace the leaking component as required.
AERATED FLUID.*	1. Low fluid level.**	1. Fill power steering fluid reservoir to proper level.
	2. Air leak between power steering fluid reservoir and pump.	2. Inspect for proper sealing. Replace the power steering pump (with reservoir).
	3. Cracked power steering pump housing.	3. Replace the power steering pump.
RESERVOIR FLUID OVERFLOW AND FLUID IS MILKY IN COLOR	1. Water contamination.	1. Drain the power steering fluid from the system. Flush the system with fresh clean power steering fluid, drain, then refill to the proper level.

NOTE: * Aerated fluid will appear with bubbles or foam, somewhat like champagne, when viewed through the reservoir fill opening.

NOTE: ** Extremely cold temperatures may cause power steering fluid aeration, if the power steering fluid is low.

POWER STEERING FLOW AND PRESSURE TEST

WARNING: TO PREVENT PERSONAL INJURY, SAFETY GOGGLES SHOULD BE WORN AT ALL TIMES WHILE PERFORMING ANY TEST PROCEDURES ON THE POWER STEERING SYSTEM.

The following procedure is to be used to test the operation of the power steering system on this vehicle. This test will provide the flow rate of the power steering pump along with the maximum relief pressure. This test is to be performed any time a power steering system problem is present to determine if the power steering pump or power steering gear is not functioning properly. The following flow and pressure test is performed using the Power Steering Analyzer Kit, Special Tool 6815 (Fig. 3), hoses, Special Tools 6905 and 6959, and adapters, Special Tool 8185A.

(1) Assemble hoses on Power Steering Analyzer, Special Tool 6815, as shown (Fig. 3). Install Pressure Hose, Special Tool 6905 (in 6893 kit), in the inlet fitting on Power Steering Analyzer flow meter. Install Pressure Hose, Special Tool 6713 (in 6815 kit) on 6905. Install Pressure Hose, Special Tool 6959, in the outlet fitting on Power Steering Analyzer flow meter.

(2) Install Adapter Fitting, Special Tool 8185-1A, on the end of Pressure Hose, Special Tool 6713. Install Adapter Fitting, Special Tool 8185-2, on Pressure Hose, Special Tool 6959.

(3) Raise the vehicle. Refer to Hoisting in the Lubrication And Maintenance section for the procedure.

DIAGNOSIS AND TESTING (Continued)

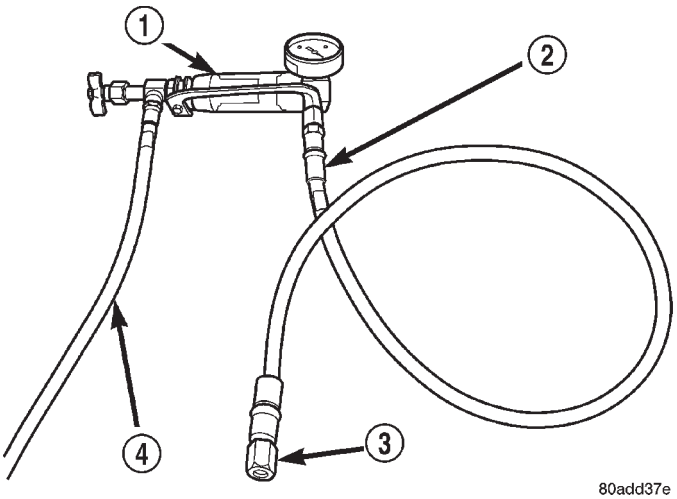

Fig. 3 Power Steering Analyzer With Hoses Installed

1 – SPECIAL TOOL 6815
2 – SPECIAL TOOL 6959
3 – SPECIAL TOOL 8185-2
4 – SPECIAL TOOL 6905 & 6713-1

(4) Unscrew the tube nut and disconnect the power steering fluid pressure hose from the power steering gear (Fig. 4).

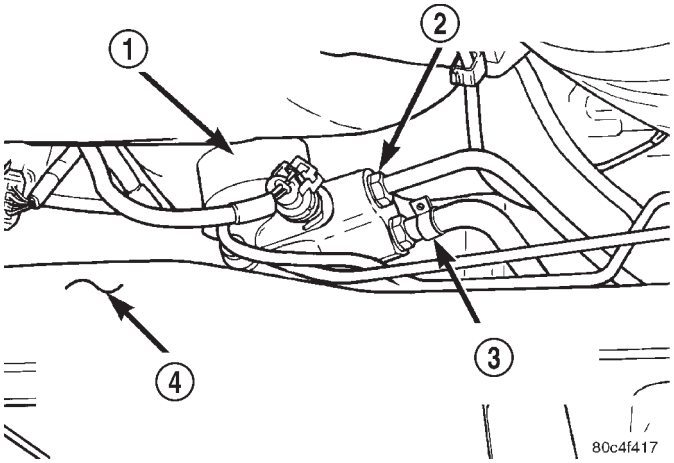

Fig. 4 Hose At Gear

1 – POWER STEERING GEAR
2 – PRESSURE HOSE TUBE NUT
3 – RETURN HOSE CLAMP
4 – REAR OF FRONT SUSPENSION CROSSMEMBER

(5) Connect the vehicle's power steering pressure hose to Adapter Fitting, Special Tool 8185-2, connected to the analyzer (Fig. 5). Tighten the tube nut to a torque of 47 N·m (35 ft. lbs.). Route the hoses away from the exhaust system as well as possible.

(6) Connect Adapter Fitting, Special Tool 8185-1A, which is connected to the analyzer outlet hose (valve end), to the power steering gear port (Fig. 5). Tighten the tube nut to a torque of 47 N·m (35 ft. lbs.).

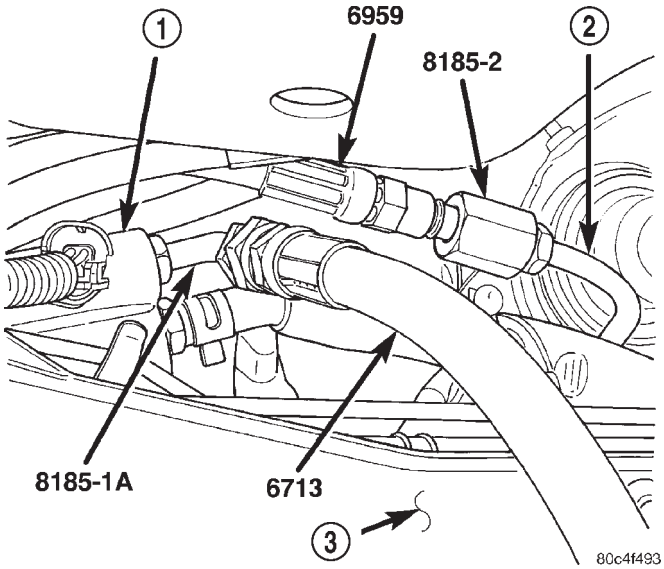

Fig. 5 Analyzer Connected To Vehicle

1 – POWER STEERING GEAR
2 – PRESSURE HOSE
3 – REAR OF FRONT SUSPENSION CROSSMEMBER

(7) Being careful not to kink or pinch the analyzer hoses, lower the vehicle to the ground.

TEST PROCEDURE

(1) Completely open the valve on the Power Steering Analyzer flow meter.

(2) Start the engine and let idle long enough to circulate power steering fluid through the analyzer and hoses, until the air is out of the fluid. Shut the off engine.

(3) Check the power steering fluid level and add fluid as necessary. Start the engine again and let idle.

(4) The analyzer gauge should read below 862 kPa (125 psi). If above, inspect the hoses for restrictions and repair as necessary. The initial pressure should be in the range of 345-552 kPa (50-80 psi). The flow meter should read between 1.5 and 1.7 GPM.

CAUTION: The following test procedure step involves testing maximum pump pressure output and flow control valve operation. Do not leave valve closed for more than five seconds as the pump could be damaged.

NOTE: Power steering pump maximum relief pressure is 9308 to 9998 kPa (1350 to 1450 psi.).

(5) Close the flow meter valve fully three times and record highest pressure indicated each time. **All three readings must be above specifications and within 345 kPa (50 psi) of each other.**

DIAGNOSIS AND TESTING (Continued)

- If the power steering pump pressure's are above specifications, but not within 345 kPa (50 psi) of each other, replace the power steering pump.
- If the pressure's are within 345 kPa (50 psi) of each other, but below specifications, replace the power steering pump.

If the power steering pump requires replacement, refer to the section Power Steering Pump within this group for the removal and installation procedure.

CAUTION: During the next step, do not force the pump to operate against the stops for more than 5 seconds at a time as pump damage may result.

(6) Completely open the valve on the Power Steering Analyzer flow meter. Turn the steering wheel to the extreme left until the stop in the steering gear is met, then turn the steering wheel to the right until the right stop is met. Record the highest indicated pressure at each position. Compare the recorded readings to the specifications. If the highest output pressure reading against one stop is not within 345 kPa (50 psi) of the highest reading at the other stop, the steering gear is leaking internally and must be replaced.

If the power steering gear requires replacement, refer to the section POWER STEERING GEAR within this group for the removal and installation procedure.

SERVICE PROCEDURES

POWER STEERING FLUID LEVEL CHECKING

WARNING: FLUID LEVEL SHOULD BE CHECKED WITH THE ENGINE OFF TO PREVENT PERSONAL INJURY FROM MOVING PARTS.

CAUTION: Use only Mopar® Power Steering Fluid or an equivalent designed for this power steering system. Do not use automatic transmission fluid.

The power steering fluid level can be viewed through the side of the power steering fluid reservoir. There are three levels listed on the side of the reservoir, MIN. COLD, MAX. COLD and MAX. HOT. When the fluid is at normal ambient temperature, approximately 21°C to 27°C (70°F to 80°F), the fluid level should read between the minimum and maximum cold markings. When the fluid is hot, fluid level is allowed to read higher, up to the Maximum Hot marking on the reservoir.

In all power steering systems, use only Mopar® Power Steering Fluid, or its equivalent. Before opening power steering system, wipe the reservoir filler cap free of dirt and debris. Do not overfill the power steering system.

REMOVAL AND INSTALLATION

SERVICE WARNINGS AND CAUTIONS

WARNING: POWER STEERING FLUID, ENGINE PARTS AND EXHAUST SYSTEM MAY BE EXTREMELY HOT IF ENGINE HAS BEEN RUNNING. DO NOT START ENGINE WITH ANY LOOSE OR DISCONNECTED HOSES. DO NOT ALLOW HOSES TO TOUCH HOT EXHAUST MANIFOLD OR CATALYST.

WARNING: FLUID LEVEL SHOULD BE CHECKED WITH THE ENGINE OFF TO PREVENT PERSONAL INJURY FROM MOVING PARTS.

CAUTION: When the system is open, cap all open ends of the hoses, power steering pump fittings or power steering gear ports to prevent entry of foreign material into the components.

CAUTION: Do not use any type of automatic transmission fluid in the power steering system. Use only correct Mopar® Power Steering Fluid or equivalent.

POWER STEERING FLUID PRESSURE HOSE

NOTE: Before proceeding with this removal and installation procedure, review SERVICE WARNINGS AND CAUTIONS at the beginning of REMOVAL AND INSTALLATION in this section.

REMOVAL

(1) Siphon as much fluid as possible from the power steering fluid reservoir.

(2) Raise the vehicle. Refer to HOISTING in the LUBRICATION AND MAINTENANCE section for the correct lifting procedure.

(3) Back out the tube nut securing the power steering fluid pressure hose to the gear (Fig. 6).

(4) Pull the hose tube out of the gear and drain the fluid from the hose.

(5) Remove the bolts securing the pressure hose routing clamps to the engine's structural collar (Fig. 7).

(6) Remove the bolt securing the pressure hose routing clamp to the front of the engine (Fig. 8).

(7) Remove the right front tire and wheel assembly.

REMOVAL AND INSTALLATION (Continued)

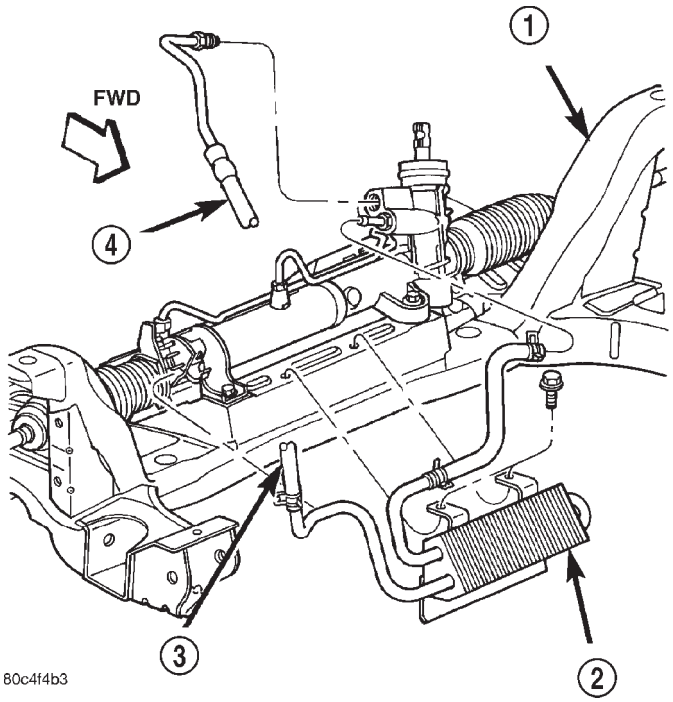

Fig. 6 Power Steering Hoses At Gear

1 – CROSSMEMBER
2 – COOLER
3 – RETURN HOSE
4 – PRESSURE HOSE

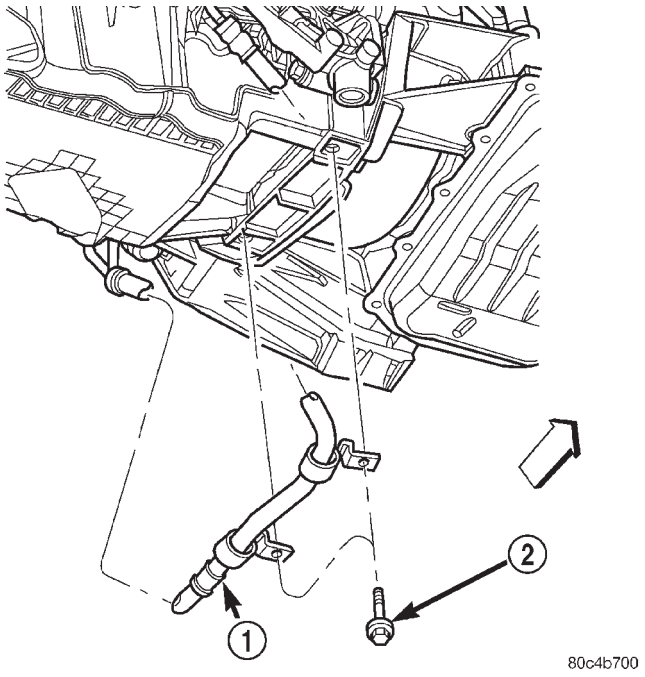

Fig. 7 Routing Clamp Bolts

1 – POWER STEERING HOSE
2 – BOLT

(8) Remove the screws fastening the front fascia to the reinforcement as necessary in order to access the drive-belt splash shield forward fastener screw (Fig. 9).

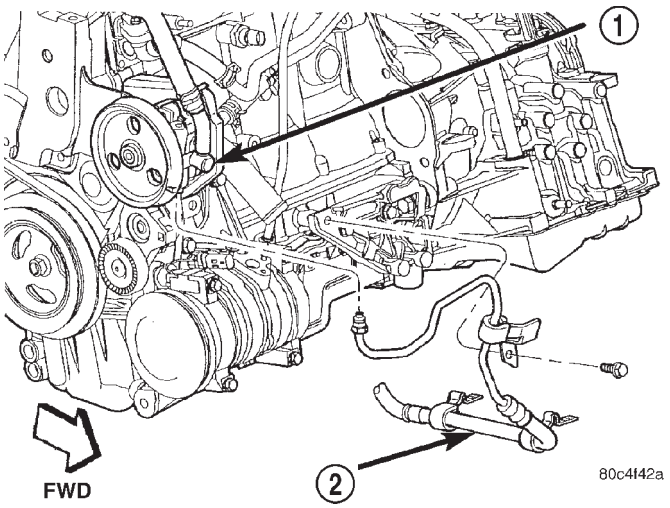

Fig. 8 Hose Connection To Pump And Engine

1 – PUMP
2 – PRESSURE HOSE

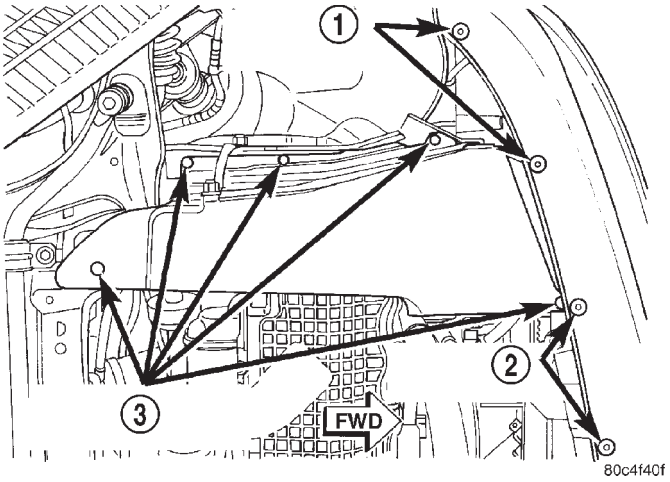

Fig. 9 Fascia And Splash Shield Fasteners

1 – FASCIA FASTENERS
2 – FASCIA FASTENERS
3 – SPLASH SHIELD FASTENERS

(9) Remove the drive-belt splash shield fasteners (Fig. 9). Remove the shield.

(10) Remove the accessory drive-belt from the A/C compressor. Refer to the Cooling section for the procedure.

(11) Remove the electrical connectors from the A/C compressor (Fig. 10).

(12) Remove the four bolts fastening the A/C compressor to the engine (Fig. 10), then move the compressor toward the center of the vehicle, allowing the compressor to settle in place.

REMOVAL AND INSTALLATION (Continued)

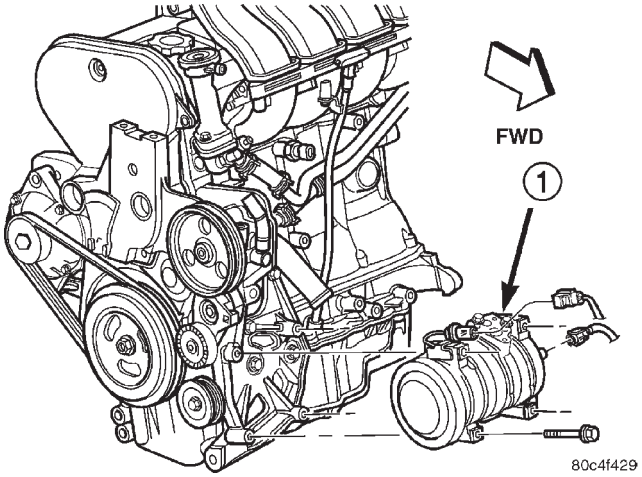

Fig. 10 A/C Compressor Mounting

1 – COMPRESSOR

(13) Remove the pressure hose from the pump in the following fashion (Fig. 8) (Fig. 11):

(a) Place a crowfoot wrench on a long extension onto the pressure hose tube nut at the pump.

(b) Place a shop towel between the crowfoot and the pump pulley to avoid slipping and possibly damaging the pulley.

(c) Unthread the tube nut from the pump.

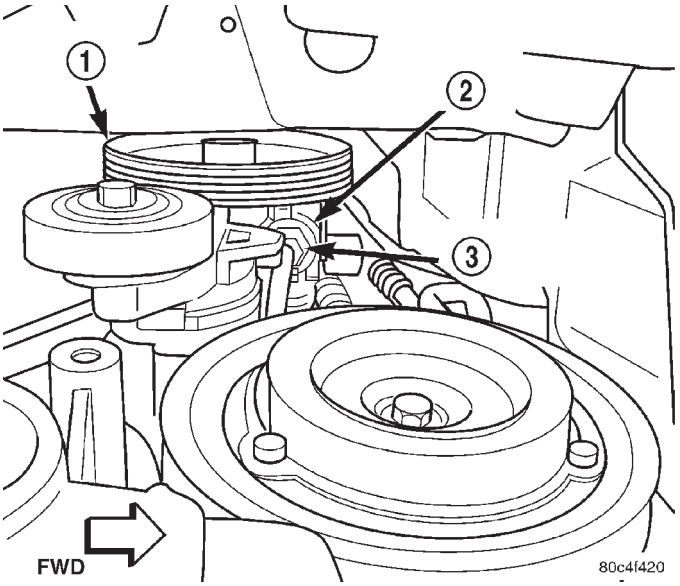

Fig. 11 Hose Fitting At Pump

1 – PUMP PULLEY
2 – POWER STEERING PUMP
3 – PRESSURE HOSE TUBE NUT

(14) Remove the power steering pressure hose from the vehicle.

INSTALLATION

CAUTION: Power steering fluid hoses must remain away from the exhaust system, driveshafts, vehicle components and any unfriendly surface that can possibly damage the hoses.

(1) Using a lint free towel, wipe clean the open power steering hose end and the power steering pump port. Replace any used O-rings with new. Lubricate the O-ring with power steering fluid.

(2) Install the power steering pressure hose into the engine compartment from the bottom. Guide the pump end of the hose up past the left side of the A/C compressor and into the pump pressure fitting (Fig. 8).

(3) Start the mounting bolt through the routing bracket, loosely attaching the pressure hose to the front of the engine (Fig. 8).

(4) Thread the hose tube nut into the pump (Fig. 11).

(5) Using a crowfoot wrench on a long extension with a torque wrench, tighten the pressure hose tube nut at the power steering pump to a torque of 68 N·m (50 ft. lbs.).

(6) Install the four bolts fastening the A/C compressor to the engine (Fig. 10). Tighten the mounting bolts to a torque of 28 N·m (250 in. lbs.).

(7) Install the A/C compressor electrical connectors (Fig. 10).

(8) Install the A/C drive belt. Refer to the Cooling section for the procedure.

(9) Install the drive-belt splash shield and fasteners (Fig. 9).

(10) Install the screws fastening the front fascia to the reinforcement (Fig. 9).

(11) Install the right front tire and wheel assembly. Install and tighten the wheel mounting nuts to a torque of 135 N·m (100 ft. lbs.).

(12) Tighten the mounting bolt securing the pressure hose and routing bracket to the front of the engine to a torque of 61 N·m (45 ft. lbs.).

(13) Attach the pressure hose and routing brackets to the structural collar (Fig. 7). Tighten the mounting bolts to a torque of 61 N·m (45 ft. lbs.).

(14) Using a lint free towel, wipe clean the open power steering hose end and the power steering gear port. Replace any used O-rings with new. Lubricate the O-ring with power steering fluid.

REMOVAL AND INSTALLATION (Continued)

CAUTION: Forward of the steering gear, the power steering fluid pressure hose routes between the front suspension crossmember and the driveshaft. When tightening the pressure hose tube nut to the steering gear, the pressure hose must be positioned (clocked) such that its final routing (after tightened to 47 N·m (35 ft. lbs.)) offers 4–10 mm clearance to the front suspension crossmember (measured at the pressure hose steel-to-rubber coupling).

(15) Attach the power steering fluid pressure hose to its port on the power steering gear (Fig. 6). While making sure the hose is not in contact with any vehicle components (see preceding caution), tighten the pressure hose tube nut at the gear to a torque of 47 N·m (35 ft. lbs.).

(16) Lower the vehicle.

(17) Perform the POWER STEERING PUMP INITIAL OPERATION service procedure which can be found in the POWER STEERING PUMP section.

(18) Check for leaks at all hose connections.

POWER STEERING FLUID RETURN HOSE

NOTE: Before proceeding with this removal and installation procedure, review SERVICE WARNINGS AND CAUTIONS at the beginning of REMOVAL AND INSTALLATION in this section.

REMOVAL

(1) Siphon as much fluid as possible from the power steering fluid reservoir.

(2) Raise the vehicle. Refer to HOISTING in the LUBRICATION AND MAINTENANCE section.

(3) Remove the hose clamp securing the return hose to the power steering fluid cooler (Fig. 12). Slide the hose off the end of the cooler tube.

(4) Lower the vehicle.

(5) Remove the hose clamp securing the return hose to the power steering fluid reservoir (Fig. 13). Slide the hose off the end of the reservoir fitting and remove from vehicle.

INSTALLATION

(1) Slide a hose clamp onto the power steering fluid reservoir end of the hose far enough to clear the molded fitting on the reservoir once the hose is installed.

(2) Install the power steering return hose into the engine compartment from the top. First, place the reservoir end of the hose onto the molded fitting on the power steering fluid reservoir, then route the rest of the hose down the rear of the engine (Fig. 13).

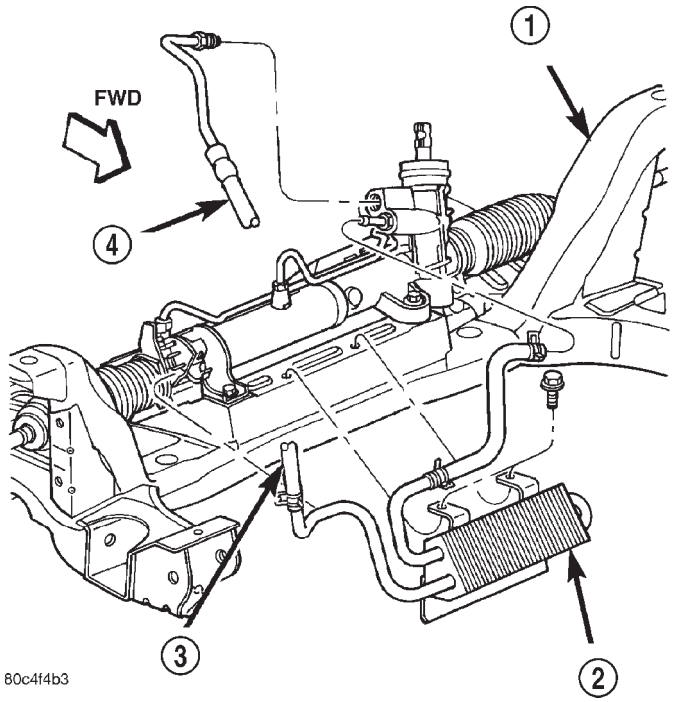

Fig. 12 Return Hose At Cooler

1 – CROSSMEMBER
2 – COOLER
3 – RETURN HOSE
4 – PRESSURE HOSE

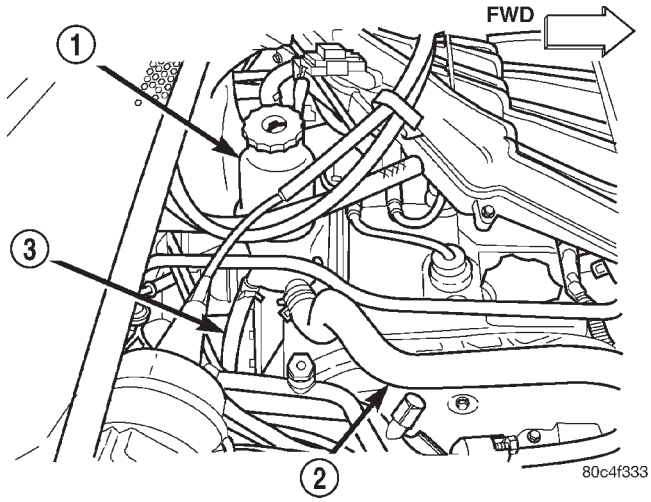

Fig. 13 Hose Connection At Reservoir

1 – POWER STEERING FLUID RESERVOIR
2 – FLUID SUPPLY HOSE
3 – FLUID RETURN HOSE

(3) Expand the hose clamp and slide it onto the fluid reservoir fitting. Secure the clamp once it is past the bead formed into the fluid reservoir fitting.

(4) Raise the vehicle.

REMOVAL AND INSTALLATION (Continued)

CAUTION: The power steering fluid hoses must remain away from the exhaust system, vehicle components, and unfriendly surfaces that can cause possible damage to the power steering hoses.

(5) Using a lint free towel, wipe clean the open power steering hose end and the power steering fluid cooler tube.

(6) Install a hose clamp onto the end of the hose far enough to clear the fitting on the steering gear or cooler once the hose is installed.

(7) Slide the hose onto the end of the cooler tube (Fig. 12). Install the hose clamp past the bead formed into the end of the cooler tube and secure in place.

(8) Lower the vehicle.

(9) Perform the POWER STEERING PUMP INITIAL OPERATION service procedure which can be found in the POWER STEERING PUMP section of this group to properly fill and bleed the power steering system.

(10) Check for leaks at all hose connections.

POWER STEERING FLUID SUPPLY HOSE

NOTE: Before proceeding with this removal and installation procedure, review SERVICE WARNINGS AND CAUTIONS at the beginning of REMOVAL AND INSTALLATION in this section.

REMOVAL

(1) Siphon as much fluid as possible from the power steering fluid reservoir.

(2) Remove the grille from the front of the vehicle (Fig. 14).

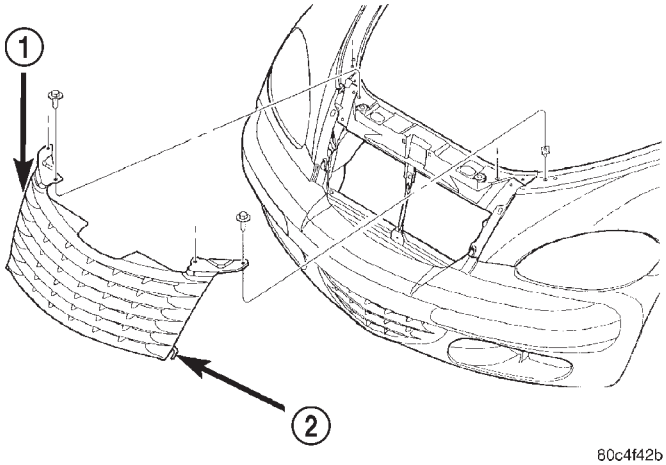

Fig. 14 Grille Attachment

1 – GRILLE
2 – RETAINER

(3) Remove the hood-opening weather-strip from across the radiator closure panel.

(4) Remove the ambient temperature sensor from the radiator closure panel (Fig. 15).

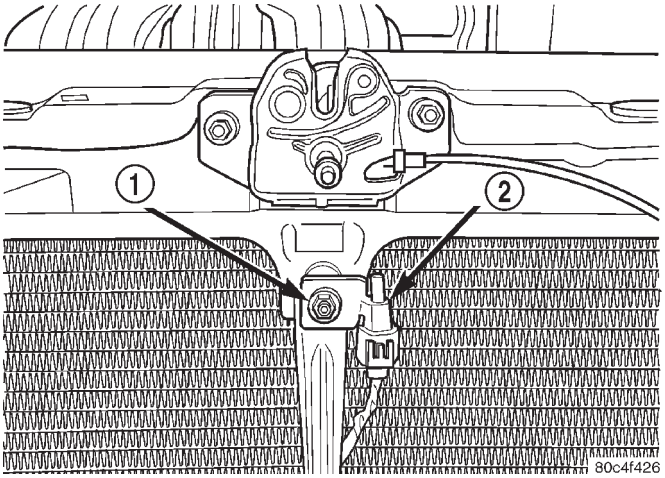

Fig. 15 Ambient Temperature Sensor

1 – FASTENER
2 – SENSOR

(5) Remove the fasteners securing the radiator closure panel in place (Fig. 16), then remove the panel.

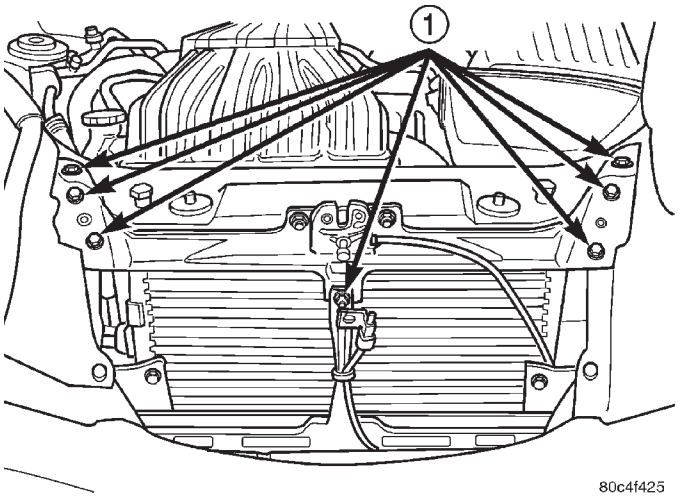

Fig. 16 Radiator Closure Panel

1 – FASTENERS

(6) Remove the clamp securing the supply hose to the power steering pump supply fitting (Fig. 17), then remove the hose from the supply fitting.

(7) Remove the hose clamp securing the supply hose to the power steering fluid reservoir (Fig. 18). Slide the hose off the end of the reservoir fitting and remove from vehicle.

INSTALLATION

(1) Slide hose clamps onto both ends of the power steering fluid supply hose far enough to clear the fit-

REMOVAL AND INSTALLATION (Continued)

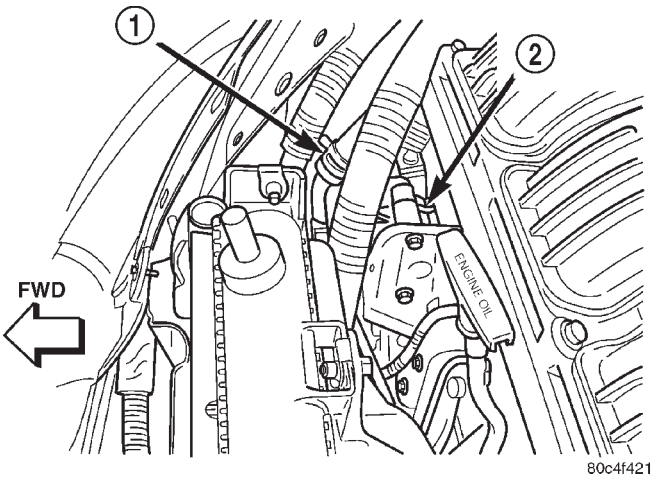

Fig. 17 Supply Hose At Pump

1 – SUPPLY HOSE CLAMP
2 – POWER STEERING PUMP

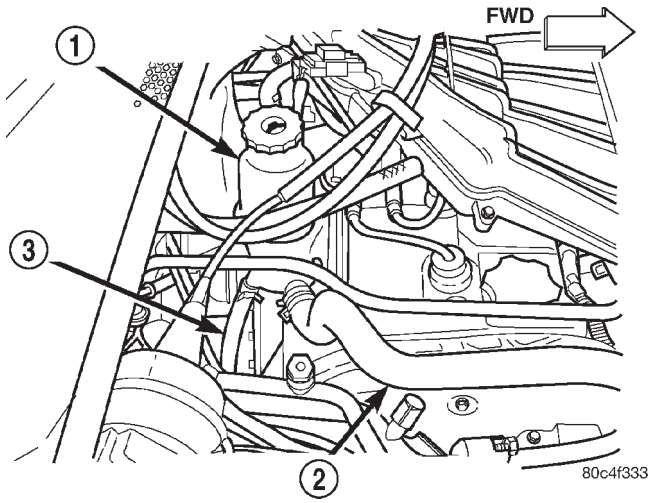

Fig. 18 Hose Connection At Reservoir

1 – POWER STEERING FLUID RESERVOIR
2 – FLUID SUPPLY HOSE
3 – FLUID RETURN HOSE

tings on the reservoir and pump once the hose is installed.

(2) Install the power steering supply hose into the engine compartment. First, route the pump end of the hose down to the pump supply fitting, then place the reservoir end of the hose onto the molded fitting of the power steering fluid reservoir (Fig. 18).

(3) Expand the hose clamp at the fluid reservoir and slide it over the hose and fitting. Secure the clamp once it is past the bead formed into the fluid reservoir fitting.

(4) Expand the remaining hose clamp and slide it over the hose and pump supply fitting (Fig. 17). Secure the clamp once it is past the bead formed into the fluid reservoir fitting.

CAUTION: Make sure the hose routing is above the engine timing chain cover. The power steering fluid supply hose must remain clear of any unfriendly surface that can cause possible damage to it.

(5) Install the radiator closure panel and fasten it in place (Fig. 16).

(6) Install the ambient temperature sensor on the radiator closure panel (Fig. 15).

(7) Install the hood-opening weather-strip across the radiator closure panel.

(8) Install the grille on the front of the vehicle (Fig. 14).

(9) Perform the POWER STEERING PUMP INITIAL OPERATION service procedure which can be found in the POWER STEERING PUMP section of this group to properly fill and bleed the power steering system.

(10) Check for leaks at all hose connections.

POWER STEERING FLUID COOLER

NOTE: Before proceeding with this removal and installation procedure, review SERVICE WARNINGS AND CAUTIONS at the beginning of REMOVAL AND INSTALLATION in this section.

REMOVAL

(1) Siphon as much fluid as possible from the power steering fluid reservoir.

(2) Raise the vehicle. Refer to HOISTING in the LUBRICATION AND MAINTENANCE group in this service manual for the correct lifting procedure.

(3) Remove the hose clamp, attaching the power steering fluid return hose to the power steering fluid cooler. Remove the return hose from the cooler.

(4) Remove the hose clamp attaching the power steering cooler fluid hose to the steel fitting in the power steering gear outlet port (Fig. 19).

(5) Remove the two screws securing the cooler to the front suspension crossmember. They are located behind the cooler. They can be accessed from above.

(6) Open the routing clip on the right front of the power steering gear housing and remove the cooler tube from it.

(7) Remove the cooler from the vehicle.

INSTALLATION

(1) Slide a hose clamp onto the end of the power steering cooler fluid hose far enough to clear the steel fitting on the power steering gear once the hose is installed.

(2) Slide the hose (with cooler attached) onto the fitting on the steering gear, then align the tube on back of the cooler with the open routing clip on the

REMOVAL AND INSTALLATION (Continued)

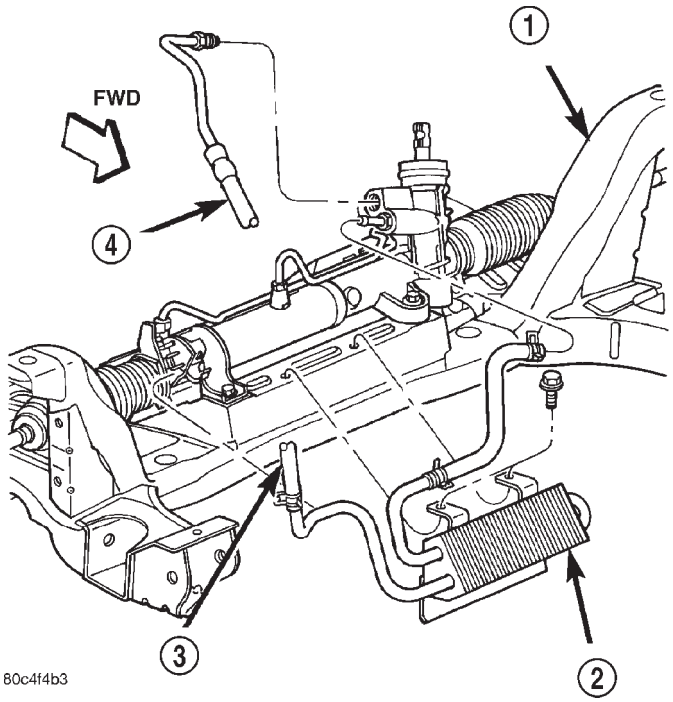

Fig. 19 Power Steering Fluid Cooler

1 – CROSSMEMBER
2 – COOLER
3 – RETURN HOSE
4 – PRESSURE HOSE

right front of the power steering gear housing, and snap it into place. Close the clip.

(3) Install the hose clamp on the power steering cooler fluid hose past the bead formed into the steel fitting and secure in place.

(4) Install the two screws attaching the cooler to the front suspension crossmember. Tighten the cooler attaching screws to a torque of 10 N·m (90 in. lbs.).

(5) Install the power steering fluid return hose on the power steering fluid cooler tube. Install the hose clamp on the power steering return hose securing it to the power steering cooler. Be sure the hose clamp is installed on the return hose past the bead on the end of the cooler tube.

(6) Lower the vehicle.

(7) Perform the POWER STEERING PUMP INITIAL OPERATION service procedure which can be found in the POWER STEERING PUMP section of this group to properly fill and bleed the power steering system.

(8) Check for leaks at all connections.

POWER STEERING FLUID PRESSURE SWITCH

NOTE: Before proceeding with this removal and installation procedure, review SERVICE WARNINGS AND CAUTIONS at the beginning of REMOVAL AND INSTALLATION in this section.

REMOVAL

(1) Disconnect negative battery cable from the negative post of the battery. Be sure cable is isolated from negative post on battery.

(2) Raise the vehicle. Refer to HOISTING in the LUBRICATION AND MAINTENANCE group in this service manual for the correct lifting procedure.

(3) Locate the power steering fluid pressure switch on the back side of the power steering gear (Fig. 20).

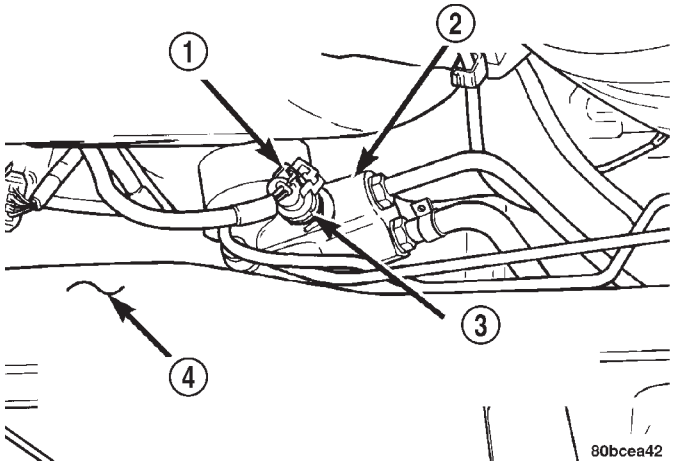

Fig. 20 Switch Location

1 – WIRING HARNESS CONNECTOR
2 – POWER STEERING GEAR
3 – POWER STEERING FLUID PRESSURE SWITCH
4 – REAR OF FRONT SUSPENSION CROSSMEMBER

(4) Remove the vehicle wiring harness connector from the power steering fluid pressure switch.

NOTE: When removing and installing the power steering pressure switch, use a 7/8 inch deep well socket. The deep well socket will prevent damage to the plastic electrical connector area of the power steering fluid pressure switch.

(5) Unscrew and remove the power steering fluid pressure switch from the power steering gear.

INSTALLATION

(1) By hand, screw the power steering pressure switch into the power steering gear until it is fully seated (Fig. 20). Tighten the power steering pressure switch to a maximum torque of 8 N·m (70 in. lbs.). Over-torquing will result in stripping the threads out of the power steering pressure switch port in the steering gear.

(2) Install the vehicle wiring harness connector. Be sure the latch on the wiring harness connector is fully engaged with the locking tab on the power steering pressure switch.

(3) Lower the vehicle.

REMOVAL AND INSTALLATION (Continued)

(4) Fill the power steering fluid reservoir to the correct fluid level. Use only Mopar® Power Steering Fluid, or equivalent.

(5) Connect the negative cable to the negative post of the battery.

(6) Start the engine and turn the steering wheel several times stop-to-stop to bleed any air from the fluid in the power steering system. Stop the engine, check the fluid level, and inspect the system for leaks.

SPECIFICATIONS

POWER STEERING FASTENER TORQUE

DESCRIPTION	TORQUE
Power Steering Fluid Cooler:	
Mounting Screws	10 N·m (90 in. lbs.)
Power Steering Fluid Pressure Hose:	
Tube Nut At Gear	47 N·m (35 ft. lbs.)
Tube Nut At Pump	68 N·m (50 ft. lbs.)
Hose Routing Clamp Bolt-engine front	61 N·m (45 ft. lbs.)
Hose Routing Clamp Bolt-structural collar	61 N·m (45 ft. lbs.)
Power Steering Fluid Pressure Switch:	
Switch	8 N·m (70 in. lbs.)
Power Steering Pump:	
Pressure Fitting	88 N·m (65 ft. lbs.)
Mounting Bolts	28 N·m (250 in. lbs.)
Rear Support Bracket To Engine Bolts	54 N·m (40 ft. lbs.)

SPECIAL TOOLS

POWER STEERING

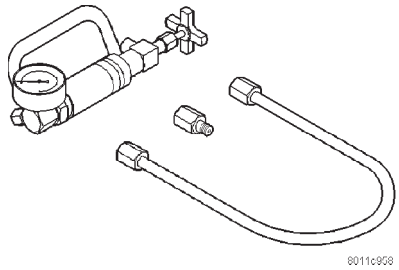

Power Steering Analyzer 6815

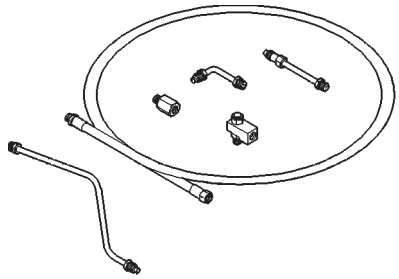

Adapters, Power Steering Analyzer 6893

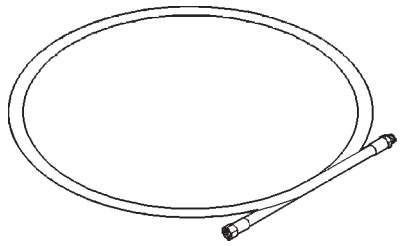

Hose, Power Steering Analyzer 6959

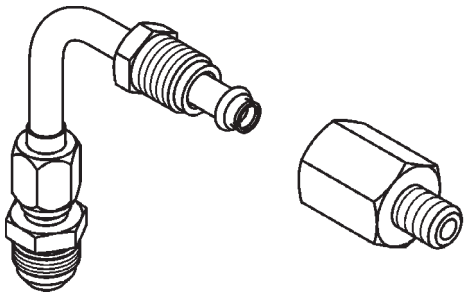

Adapters, Power Steering Analyzer 8185A

POWER STEERING PUMP

TABLE OF CONTENTS

	page
DESCRIPTION AND OPERATION	
POWER STEERING PUMP	18
POWER STEERING FLUID RESERVOIR	19
SERVICE PROCEDURES	
POWER STEERING PUMP INITIAL OPERATION	19
REMOVAL AND INSTALLATION	
SERVICE WARNINGS AND CAUTIONS	19
POWER STEERING PUMP	20
POWER STEERING FLUID RESERVOIR	23
DISASSEMBLY AND ASSEMBLY	
POWER STEERING PUMP (PULLEY)	24
SPECIFICATIONS	
POWER STEERING PUMP FLOW	25
POWER STEERING FASTENER TORQUE	25
SPECIAL TOOLS	
POWER STEERING PUMP	25

DESCRIPTION AND OPERATION

POWER STEERING PUMP

DESCRIPTION

The hydraulic pressure for operation of the power steering gear is provided by a belt-driven power steering pump manufactured by TTA (Fig. 1). The power steering pump is a constant flow rate and displacement vane-type pump.

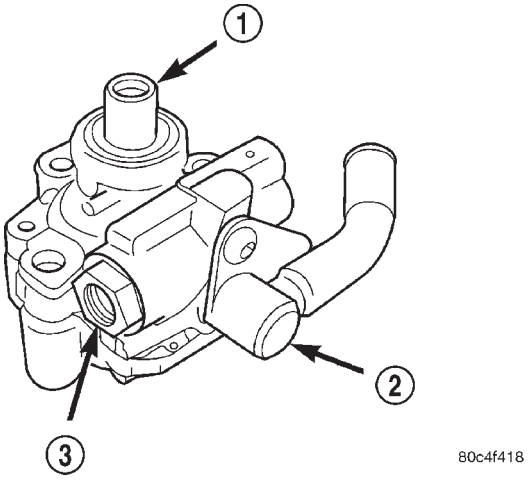

Fig. 1 Power Steering Pump

1 – SHAFT
2 – SUPPLY FITTING
3 – PRESSURE FITTING

The power steering pump consists of the power steering pump internal components and the power steering pump pulley. The power steering fluid reservoir is remotely located on this vehicle.

No repair procedures are to be done on the internal components of the power steering pump.

OPERATION

A belt from the engine crankshaft rotates the power steering pulley turning the pump shaft. The shaft connects to a rotor. Rectangular pumping vanes in the shaft driven rotor move power steering fluid from the fluid intake to the cam ring pressure cavities of the power steering pump. As the rotor begins to turn, centrifugal force throws the vanes against the inside surface of the cam ring to pickup residual fluid. This fluid is then forced into the high pressure area. As more fluid is picked up by the vanes, the additional fluid is forced into the cavities of the thrust plate through two crossover holes in the cam ring and pressure plate. The crossover holes empty into the high pressure area between the pressure plate and the housing end cover.

As the high pressure area is filled, fluid flows under the vanes in the rotor slots, forcing the vanes to follow the inside surface of the cam ring. As the vanes reach the restricted area of the cam ring, fluid is forced out from between the vanes. When excess fluid flow is generated during high-speed operation, a regulated amount of fluid returns to the pump intake side through a flow control valve. The flow control valve reduces the power required to drive the pump and holds down temperature buildup.

When steering conditions exceed maximum pressure requirements, such as when the wheels are turned against the stops, the pressure built up in the power steering gear exerts pressure on the spring end of the flow control valve. The high pressure lifts the relief valve ball from its seat and allows fluid to flow through a trigger orifice located in the outlet fitting. This reduces pressure on the spring end of the flow control valve which then opens and allows the fluid to return to the intake side of the pump. This action limits maximum pressure output of the pump to a safe level.

DESCRIPTION AND OPERATION (Continued)

Under normal power steering pump operating conditions, pressure requirements of the pump are below maximum, causing the pressure relief valve to remain closed.

In the event of a power steering pump drive belt failure, although power assist is lost, manual steering control of the vehicle can still be maintained. However, under these conditions, steering effort will be significantly increased.

POWER STEERING FLUID RESERVOIR

DESCRIPTION

The power steering system uses a remote mounted fluid reservoir. The power steering fluid reservoir is mounted to a dovetail bracket attached to the backside of the engine (Fig. 2).

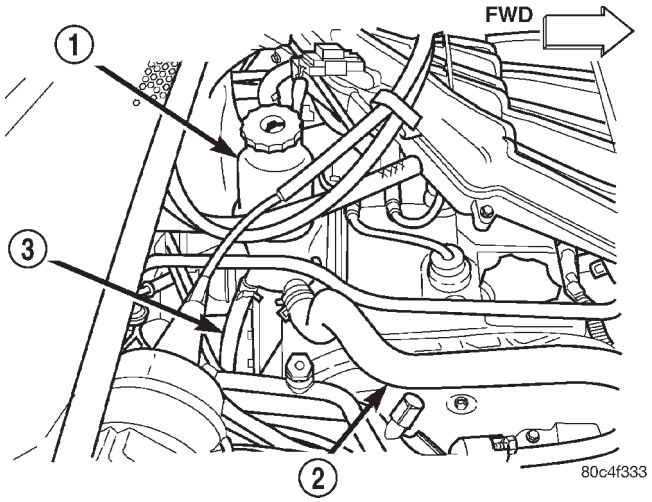

Fig. 2 Power Steering Fluid Reservoir

1 – POWER STEERING FLUID RESERVOIR
2 – FLUID SUPPLY HOSE
3 – FLUID RETURN HOSE

OPERATION

The power steering fluid reservoir stores fluid for the power steering system.

SERVICE PROCEDURES

POWER STEERING PUMP INITIAL OPERATION

WARNING: THE FLUID LEVEL SHOULD BE CHECKED AND ADJUSTED WITH THE ENGINE OFF TO PREVENT INJURY FROM MOVING ENGINE COMPONENTS.

CAUTION: Use only Mopar® Power Steering Fluid. Do not use automatic transmission fluid. Do not overfill.

The fluid level should read between MIN. COLD and MAX. COLD when the fluid is at normal temperature, approximately 21°C to 27°C (70°F to 80°F).

(1) Fill the power steering fluid reservoir to the proper level and let the fluid settle for at least two minutes.

(2) Start the engine and let run for a few seconds, then turn the engine off.

(3) Add fluid if necessary. Repeat the above procedure until the fluid level remains constant after running the engine.

(4) Raise the front wheels off the ground.

(5) Start the engine. Slowly turn the steering wheel right and left, lightly contacting the wheel stops.

(6) Add power steering fluid if necessary.

(7) Lower the vehicle and turn the steering wheel slowly from lock to lock.

(8) Stop the engine. Check the fluid level and refill as required.

(9) If the fluid is extremely foamy, allow the vehicle to stand a few minutes and repeat the above procedure.

REMOVAL AND INSTALLATION

SERVICE WARNINGS AND CAUTIONS

WARNING: POWER STEERING FLUID, ENGINE PARTS AND EXHAUST SYSTEM MAY BE EXTREMELY HOT IF ENGINE HAS BEEN RUNNING. DO NOT START ENGINE WITH ANY LOOSE OR DISCONNECTED HOSES. DO NOT ALLOW HOSES TO TOUCH HOT EXHAUST MANIFOLD OR CATALYST.

WARNING: FLUID LEVEL SHOULD BE CHECKED WITH THE ENGINE OFF TO PREVENT PERSONAL INJURY FROM MOVING PARTS.

CAUTION: When the system is open, cap all open ends of the hoses, power steering pump fittings or power steering gear ports to prevent entry of foreign material into the components.

CAUTION: Do not use any type of automatic transmission fluid in the power steering system. Use only correct Mopar® Power Steering Fluid or equivalent.

REMOVAL AND INSTALLATION (Continued)

POWER STEERING PUMP

NOTE: Before proceeding with this removal and installation procedure, review SERVICE WARNINGS AND CAUTIONS at the beginning of REMOVAL AND INSTALLATION in this section.

REMOVAL

(1) Siphon as much fluid as possible from the power steering fluid reservoir.

(2) Raise the vehicle. Refer to HOISTING in the LUBRICATION AND MAINTENANCE section for the correct lifting procedure.

(3) Remove the right front tire and wheel assembly.

(4) Remove the screws fastening the front fascia to the reinforcement as necessary in order to access the drive-belt splash shield forward fastener screw (Fig. 3).

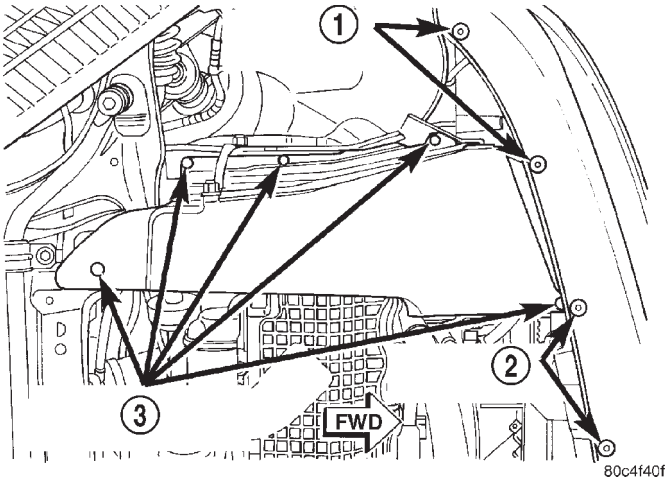

Fig. 3 Fascia And Splash Shield Fasteners

1 – FASCIA FASTENERS
2 – FASCIA FASTENERS
3 – SPLASH SHIELD FASTENERS

(5) Remove the drive-belt splash shield fasteners (Fig. 3). Remove the shield.

(6) Remove the accessory drive-belt from the A/C compressor and power steering pump. Refer to the Cooling section for the procedure.

(7) Remove the electrical connectors from the A/C compressor (Fig. 4).

(8) Remove the four bolts fastening the A/C compressor to the engine (Fig. 4), then move the compressor toward the center of the vehicle, allowing the compressor to settle in place.

(9) Remove the pressure hose from the pump in the following fashion (Fig. 5) (Fig. 6):

(a) Place a crowfoot wrench on a long extension onto the pressure hose tube nut at the pump.

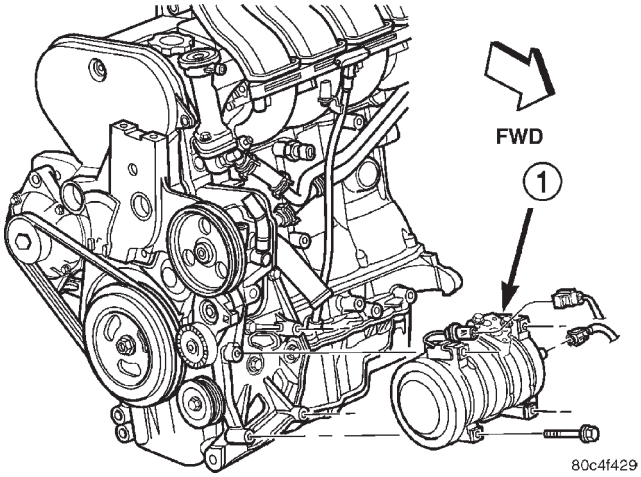

Fig. 4 A/C Compressor Mounting

1 – COMPRESSOR

(b) Place a shop towel between the crowfoot and the pump pulley to avoid slipping and possibly damaging the pulley.

(c) Unthread the tube nut from the pump.

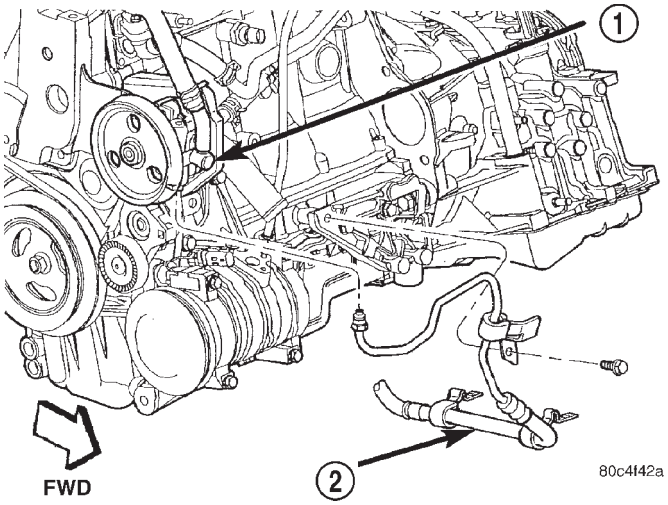

Fig. 5 Pressure Hose Connection To Pump

1 – PUMP
2 – PRESSURE HOSE

(10) Lower the vehicle.

(11) Remove the grille from the front of the vehicle (Fig. 7).

(12) Remove the hood-opening weather-strip from across the radiator closure panel.

(13) Remove the ambient temperature sensor from the radiator closure panel (Fig. 8).

(14) Remove the fasteners securing the upper radiator closure panel in place (Fig. 9), then remove the panel.

(15) Lift the cooling module out of its lower mounts and carefully move it toward the left side of

REMOVAL AND INSTALLATION (Continued)

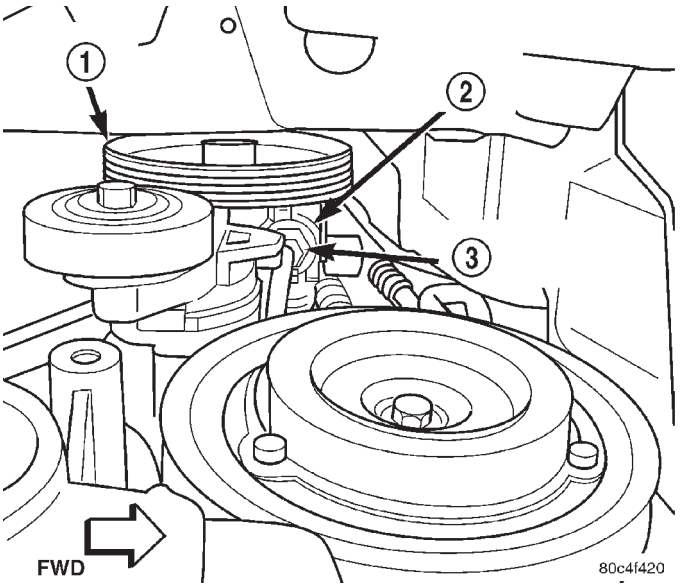

Fig. 6 Pressure Hose Tube Nut

1 – PUMP PULLEY
2 – POWER STEERING PUMP
3 – PRESSURE HOSE TUBE NUT

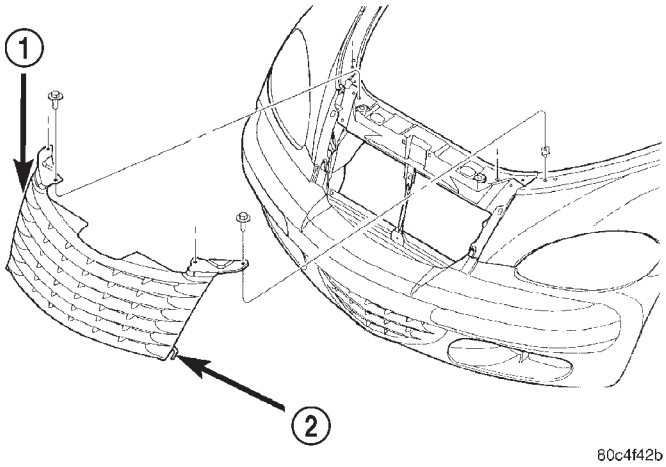

Fig. 7 Grille Attachment

1 – GRILLE
2 – RETAINER

the vehicle. It will move only a limited amount with the hoses still connected. Do not force it.

NOTE: For additional room, the right side bolts securing the lower radiator closure panel in front of the cooling module can be removed.

(16) Using a bungee cord, tie the cooling module forward as shown (Fig. 10). Be sure to attach the cord in a location that will not damage the vehicle. Do not overtighten the bungee cord. It just needs to hold the module forward.

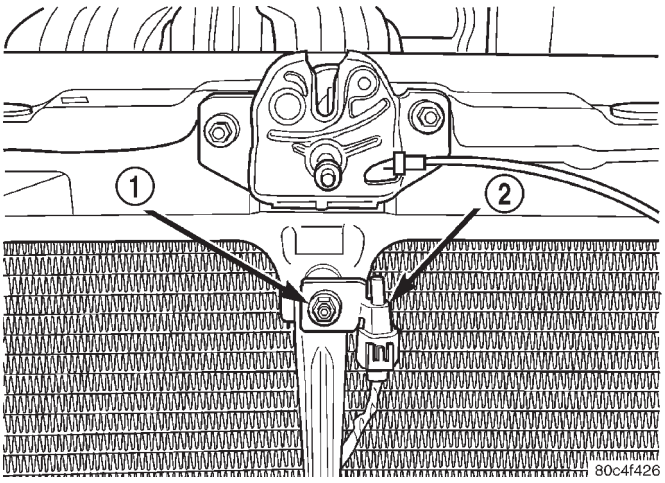

Fig. 8 Ambient Temperature Sensor

1 – FASTENER
2 – SENSOR

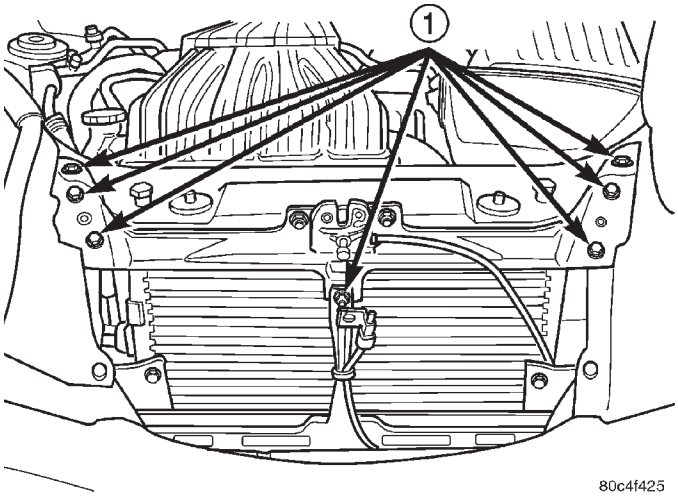

Fig. 9 Radiator Closure Panel

1 – FASTENERS

(17) Remove the clamp securing the supply hose to the power steering pump supply fitting (Fig. 11), then remove the hose from the supply fitting.

(18) Remove the three bolts securing the pump in place (Fig. 12).

(19) Remove the 2 bolts securing the stamped steel support bracket to the engine block (Fig. 12). Remove the bracket.

(20) Ease the cooling module forward, don't force it, and remove the power steering pump and pulley where shown (Fig. 13).

INSTALLATION

(1) Using a lint free towel, wipe clean the open power steering pressure hose end and the power steering pump port. Replace any used O-rings with

REMOVAL AND INSTALLATION (Continued)

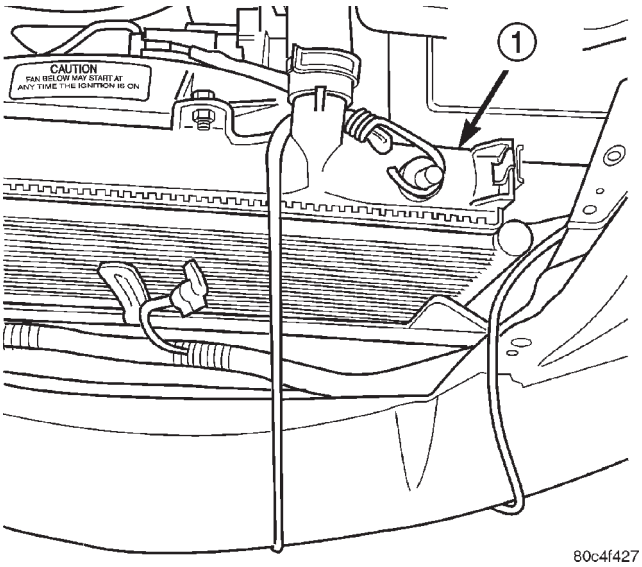

Fig. 10 Cooling Module Tied Forward

1 – COOLING MODULE

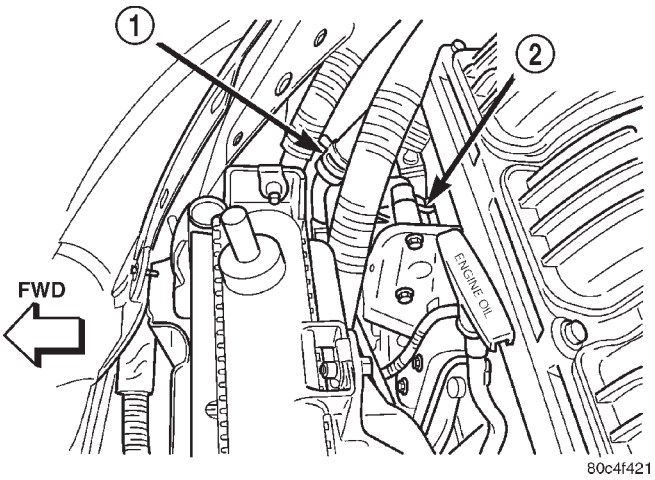

Fig. 11 Supply Hose At Pump

1 – SUPPLY HOSE CLAMP
2 – POWER STEERING PUMP

new. Lubricate the O-ring with clean power steering fluid.

(2) Ease the cooling module forward, don't force it, and install the power steering pump and pulley into its mounting area in the same fashion it was removed (Fig. 13).

(3) Place the pump in mounting position with the stamped steel support bracket behind it (Fig. 12). Install the three bolts through the bracket and pump, into the threaded engine cover. Do not tighten the bolts at this time.

(4) Install the two bolts fastening the bracket to the engine block (Fig. 12). Tighten the two bolts to a torque of 54 N·m (40 ft. lbs.).

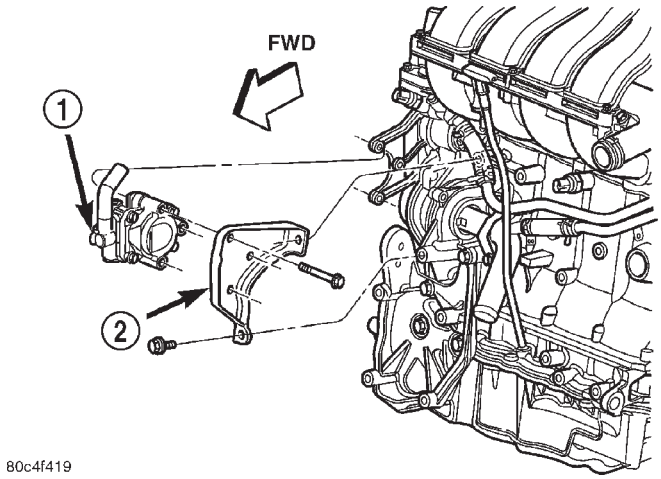

Fig. 12 Mounting Bolts

1 – POWER STEERING PUMP
2 – SUPPORT

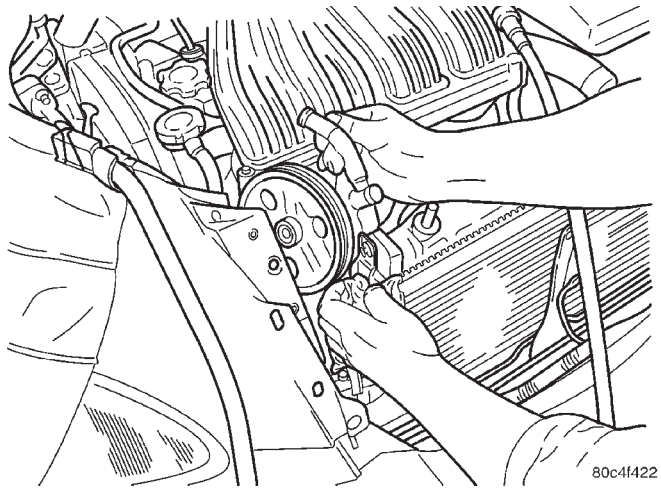

Fig. 13 Power Steering Pump Removal

(5) Tighten the three pump mounting bolts previously installed to a torque of 28 N·m (250 in. lbs.).

(6) Push the fluid supply hose onto the pump supply fitting. Expand the hose clamp and slide it over the hose and pump supply fitting (Fig. 11). Secure the clamp once it is past the bead formed into the fluid reservoir fitting.

CAUTION: Make sure the supply hose is routed above the engine timing chain cover. The power steering fluid supply hose must remain clear of any unfriendly surface that can cause possible damage to it.

(7) Raise the vehicle.

(8) Thread the fluid pressure hose tube nut into the pump (Fig. 5) (Fig. 6).

(9) Using a crowfoot wrench on a long extension with a torque wrench, tighten the pressure hose tube

REMOVAL AND INSTALLATION (Continued)

nut at the power steering pump to a torque of 68 N·m (50 ft. lbs.).

(10) Install the four bolts fastening the A/C compressor to the engine (Fig. 4). Tighten the mounting bolts to a torque of 28 N·m (250 in. lbs.).

(11) Install the A/C compressor electrical connectors (Fig. 4).

(12) Install the A/C drive belt. Refer to the Cooling section for the procedure.

(13) Install the drive-belt splash shield and fasteners (Fig. 3).

(14) Install the screws fastening the front fascia to the reinforcement (Fig. 3).

(15) Install the right front tire and wheel assembly. Install and tighten the wheel mounting nuts to a torque of 135 N·m (100 ft. lbs.).

(16) Lower the vehicle.

(17) Remove the bungee cord and move the cooling module back into is lower mounts.

(18) If previously removed, install the right side bolts securing the lower radiator closure panel in front of the cooling module.

(19) Install the radiator closure panel and fasten it in place (Fig. 9).

(20) Install the ambient temperature sensor on the radiator closure panel (Fig. 8).

(21) Install the hood-opening weather-strip across the radiator closure panel.

(22) Install the grille on the front of the vehicle (Fig. 7).

(23) Perform the POWER STEERING PUMP INITIAL OPERATION service procedure which can be found in the POWER STEERING PUMP section of this group to properly fill and bleed the power steering system.

(24) Check for leaks.

POWER STEERING FLUID RESERVOIR

REMOVAL

(1) Remove the filler cap from remote power steering fluid reservoir (Fig. 14).

(2) Siphon as much fluid as possible from the fluid reservoir.

(3) Remove the clamp attaching the supply hose to the power steering fluid reservoir (Fig. 14). Remove the hose from the reservoir.

(4) Remove the clamp attaching the return hose to the power steering fluid reservoir (Fig. 14). Remove the hose from the reservoir.

(5) Pull outward on the retaining tab and remove the reservoir from its bracket (Fig. 15).

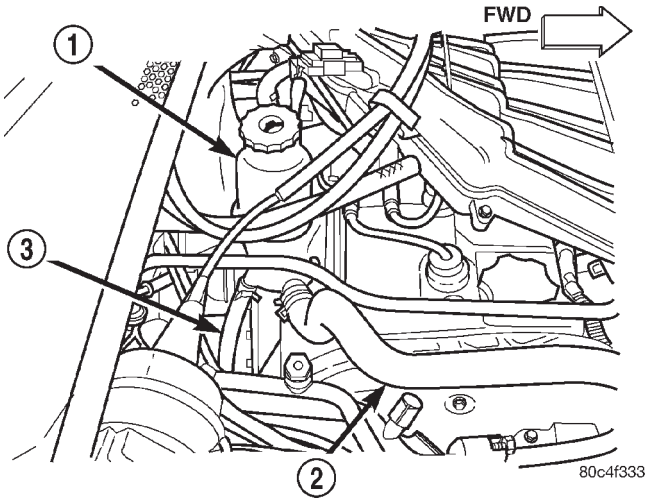

Fig. 14 Power Steering Fluid Reservoir

1 – POWER STEERING FLUID RESERVOIR
2 – FLUID SUPPLY HOSE
3 – FLUID RETURN HOSE

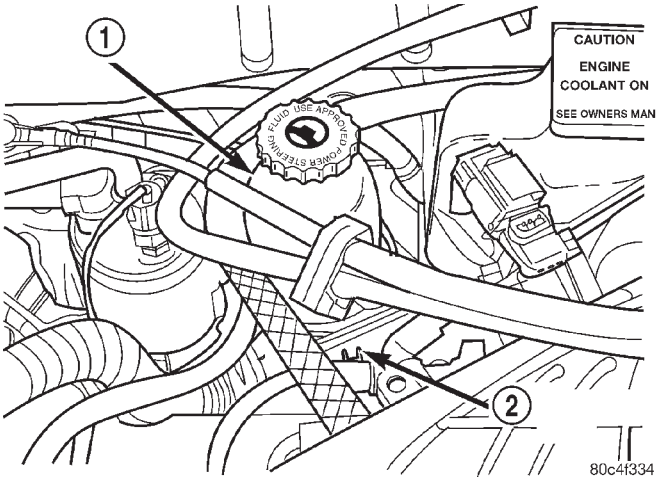

Fig. 15 Retaining Tab

1 – POWER STEERING FLUID RESERVOIR
2 – RETAINING TAB

INSTALLATION

(1) Install the power steering fluid reservoir into the bracket. Push it down into the bracket until the retaining tab locks it in position (Fig. 15).

NOTE: The reservoir must lock securely into position. If it is loose in the bracket, reset the locking tab on the mounting bracket.

(2) Install the fluid supply hose onto the power steering fluid reservoir fitting (Fig. 14).

(3) Slide the hose clamp on the fluid supply hose up into position on the fluid reservoir and install it. Be sure hose clamp in installed past bead on fluid reservoir fitting.

REMOVAL AND INSTALLATION (Continued)

CAUTION: Make sure the supply hose is routed above the engine timing chain cover. The power steering fluid supply hose must remain clear of any unfriendly surface that can cause possible damage to it.

(4) Install the fluid return hose onto the power steering fluid reservoir fitting (Fig. 14).

(5) Slide the hose clamp on the fluid supply hose up into position on the fluid reservoir and install it. Be sure hose clamp in installed past bead on fluid reservoir fitting.

(6) Fill the fluid reservoir to the proper level (MAX. COLD) with Mopar® power steering fluid or an equivalent.

(7) Start the engine and let run for a few seconds, then turn the engine off.

(8) Add fluid if necessary.

(9) Install the filler cap.

DISASSEMBLY AND ASSEMBLY

POWER STEERING PUMP (PULLEY)

NOTE: The only serviceable part of the power steering pump is the pulley. The following procedure is for the removal and installation of the pulley from the pump.

NOTE: The power steering pump must be removed from the vehicle for power steering pump pulley service. Refer to POWER STEERING PUMP in REMOVAL AND INSTALLATION for the required procedure.

CAUTION: Use care when removing and installing the power steering pump pulley. It is made of plastic composite, except for the center shank. Use the special tools in the shank area only as described in the following procedure.

DISASSEMBLY

CAUTION: Do not hammer on the power steering pump pulley or shaft to remove the power steering pump pulley. This will damage the pulley and the power steering pump.

(1) Install Puller, Special Tool C-4333, or an equivalent, on the steering pump pulley as shown (Fig. 16). Tighten the puller screw drive and remove the pulley from the power steering pump shaft.

(2) Remove the puller from the pulley.

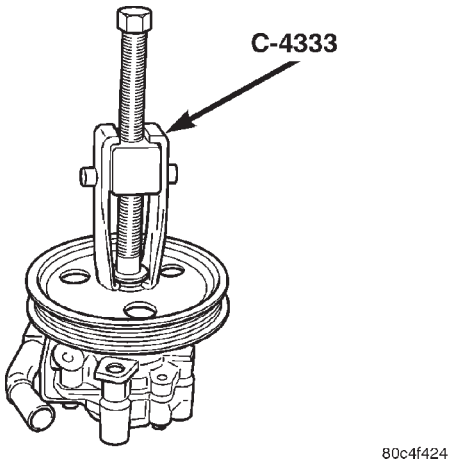

Fig. 16 Pulley Removal

ASSEMBLY

NOTE: Replace the power steering pump pulley if it is cracked or loose.

(1) Place the power steering pump pulley squarely on end of the power steering pump shaft. Mount Installer, Special Tool C-4063, or an equivalent, in the internal threads of the power steering pump shaft and against power steering pump pulley (Fig. 17).

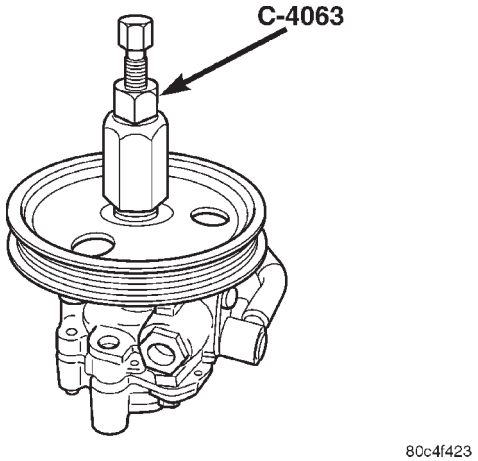

Fig. 17 Pulley Installation

(2) Ensuring that the installer and the pulley remain aligned with the pump shaft, turn the installer outer nut and force the pulley onto the power steering pump shaft until it is flush with the end of the pump shaft. Once the pulley is flush with the end of the shaft, the installer outer nut will no longer be able to turn.

(3) Remove the installer from the power steering pump.

(4) Install the power steering pump back on the engine. Refer to POWER STEERING PUMP in REMOVAL AND INSTALLATION.

SPECIFICATIONS

POWER STEERING PUMP FLOW

Power Steering Pump Flow:
At 1500 RPM And Minimum
Pressure . . . . . 4.2 to 4.9 Liters/Min (1.5 to 1.7 GPM)
Control Valve Pressure Relief . . . 9308 to 9998 kPa (1350 to 1450 psi)

POWER STEERING FASTENER TORQUE

DESCRIPTION	TORQUE
Power Steering Fluid Cooler:	
Mounting Screws	10 N·m (90 in. lbs.)
Power Steering Fluid Pressure Hose:	
Tube Nut At Gear	47 N·m (35 ft. lbs.)
Tube Nut At Pump	68 N·m (50 ft. lbs.)
Hose Routing Clamp Bolt-engine front	61 N·m (45 ft. lbs.)
Hose Routing Clamp Bolt-structural collar	61 N·m (45 ft. lbs.)
Power Steering Fluid Pressure Switch:	
Switch	8 N·m (70 in. lbs.)
Power Steering Pump:	
Pressure Fitting	88 N·m (65 ft. lbs.)
Mounting Bolts	28 N·m (250 in. lbs.)
Rear Support Bracket To Engine Bolts	54 N·m (40 ft. lbs.)

SPECIAL TOOLS

POWER STEERING PUMP

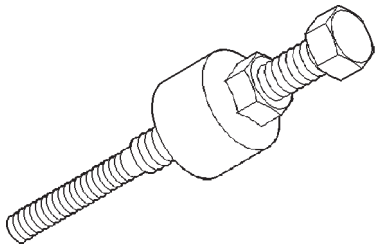

Installer C-4063B

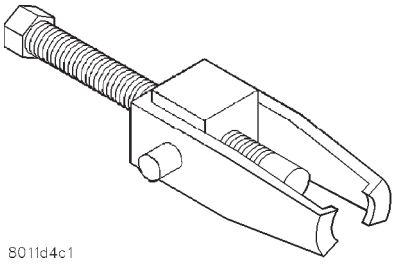

Puller C-4333

STEERING GEAR

TABLE OF CONTENTS

	page
DESCRIPTION AND OPERATION	
POWER STEERING GEAR	26
REMOVAL AND INSTALLATION	
SERVICE WARNINGS AND CAUTIONS	27
POWER STEERING GEAR	27
OUTER TIE ROD	32
SPECIFICATIONS	
POWER STEERING GEAR FASTENER TORQUE	33
SPECIAL TOOLS	
POWER STEERING GEAR	33

DESCRIPTION AND OPERATION

POWER STEERING GEAR

DESCRIPTION

The power steering gear is the rack-and-pinion type. It is mounted on the front suspension crossmember (Fig. 1). The outer ends of the outer tie rods attach to the steering knuckles.

NOTE: The power steering gear should not be serviced or adjusted. If a malfunction or oil leak occurs with the steering gear, the complete steering gear needs to be replaced.

OPERATION

Turning of the steering wheel is converted into linear (side-to-side) travel through the meshing of the helical pinion teeth with the rack teeth in the steering gear. This travel pushes and pulls the tie rods to change the direction of the vehicle's front wheels.

Power assist steering provided by the power steering pump is controlled by an open-center, rotary type control valve which directs fluid from the pump to either side of the integral rack piston upon demand.

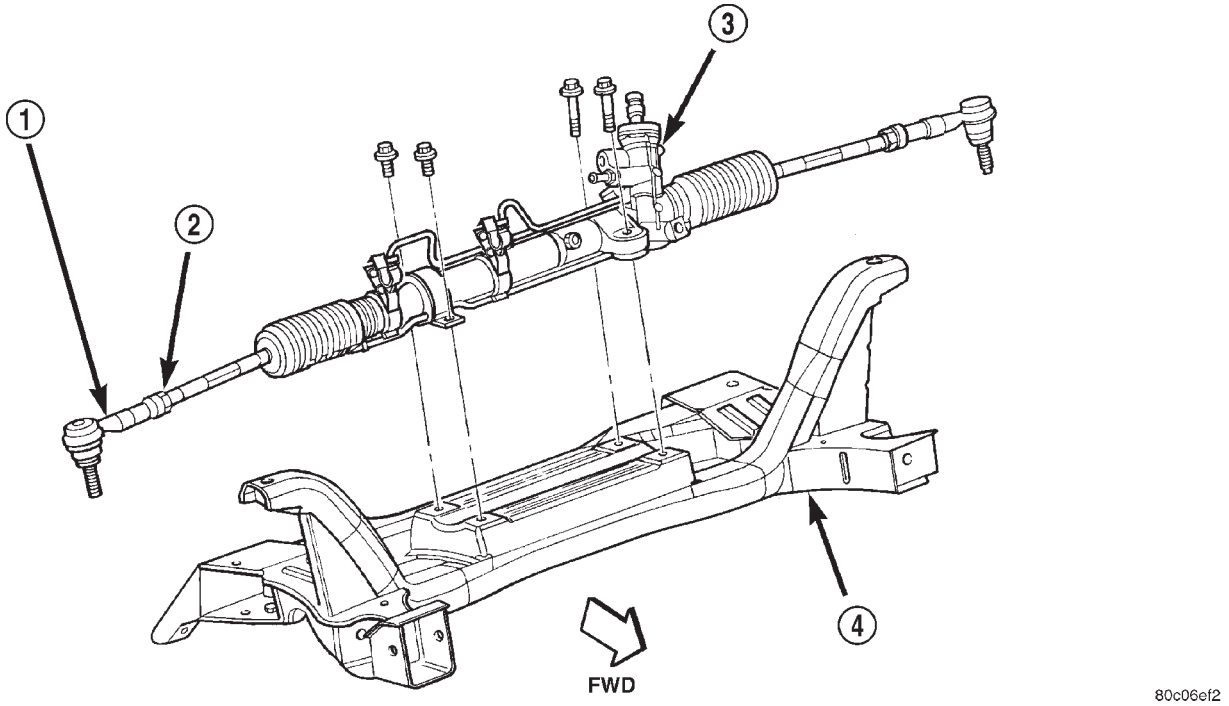

Fig. 1 Power Steering Gear

1 – OUTER TIE ROD
2 – JAM NUT
3 – STEERING GEAR
4 – FRONT SUSPENSION CROSSMEMBER

DESCRIPTION AND OPERATION (Continued)

Road feel is controlled by the diameter of a torsion bar which initially steers the vehicle. As required steering effort increases, as in a turn, the torsion bar twists, causing relative rotary motion between the rotary valve body and the valve spool. This movement directs oil behind the integral rack piston which, in turn, builds up hydraulic pressure and assists in the turning effort.

Manual steering control of the vehicle can be maintained if power steering assist is lost. However, under this condition, steering effort is significantly increased.

REMOVAL AND INSTALLATION

SERVICE WARNINGS AND CAUTIONS

WARNING: POWER STEERING FLUID, ENGINE PARTS AND EXHAUST SYSTEM MAY BE EXTREMELY HOT IF ENGINE HAS BEEN RUNNING. DO NOT START ENGINE WITH ANY LOOSE OR DISCONNECTED HOSES. DO NOT ALLOW HOSES TO TOUCH HOT EXHAUST MANIFOLD OR CATALYST.

WARNING: FLUID LEVEL SHOULD BE CHECKED WITH THE ENGINE OFF TO PREVENT PERSONAL INJURY FROM MOVING PARTS.

CAUTION: When the system is open, cap all open ends of the hoses, power steering pump fittings or power steering gear ports to prevent entry of foreign material into the components.

CAUTION: Do not use any type of automatic transmission fluid in the power steering system. Use only correct Mopar® Power Steering Fluid or equivalent.

POWER STEERING GEAR

NOTE: Before proceeding with this removal and installation procedure, review SERVICE WARNINGS AND CAUTIONS at the beginning of REMOVAL AND INSTALLATION in this section.

REMOVAL

(1) Place the steering wheel in the STRAIGHT-AHEAD position. Using a steering wheel holder, lock the steering wheel in place to keep it from rotating (Fig. 2). This keeps the clockspring in the proper orientation.

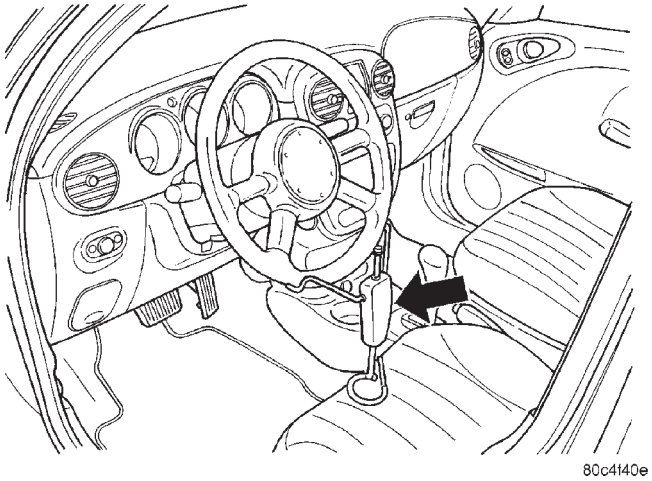

Fig. 2 Steering Wheel Holder

(2) Remove the silencer pad below the knee blocker panel below the steering column.

(3) Fold down and remove the knee blocker.

(4) Remove the steering column coupling retainer pin, back off the pinch bolt nut, and remove the steering column coupling pinch bolt (Fig. 3)(the pinch bolt nut is caged to the coupling and is not removable). Separate the upper and lower steering column couplings.

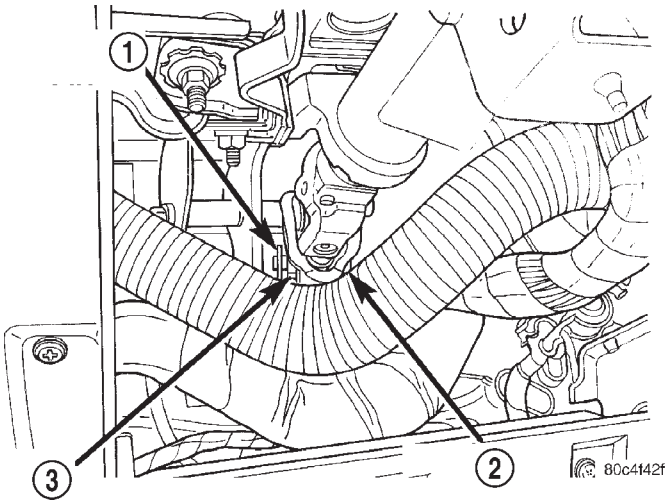

Fig. 3 Steering Column Couplings

1 – RETAINING PIN
2 – PINCH BOLT
3 – NUT

(5) Raise the vehicle. Refer to HOISTING in the LUBRICATION AND MAINTENANCE section.

(6) Remove both front tire and wheel assemblies from the vehicle.

(7) Remove nuts attaching both outer tie rods to the steering knuckles (Fig. 4). Remove each nut by holding the tie rod stud stationary while loosening

REMOVAL AND INSTALLATION (Continued)

and removing the nut with a crowfoot wrench (or open-end wrench).

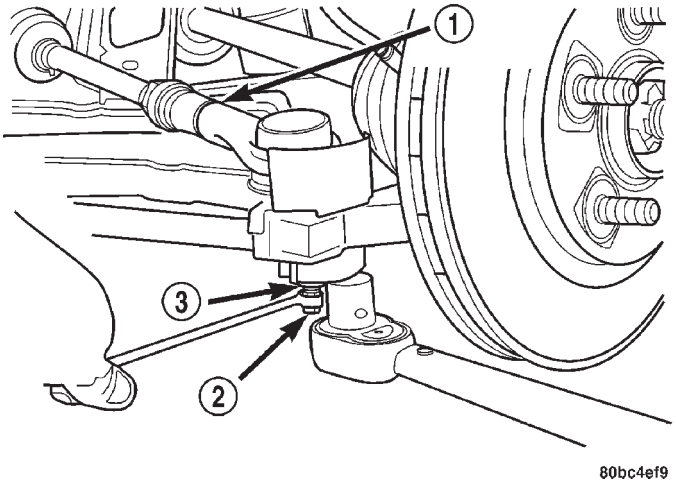

Fig. 4 Tools On Outer Tie Rod Nut

1 – OUTER TIE ROD
2 – STUD
3 – NUT

(8) Remove the outer tie rods from the steering knuckles using Remover, Special Tool MB991113 (Fig. 5).

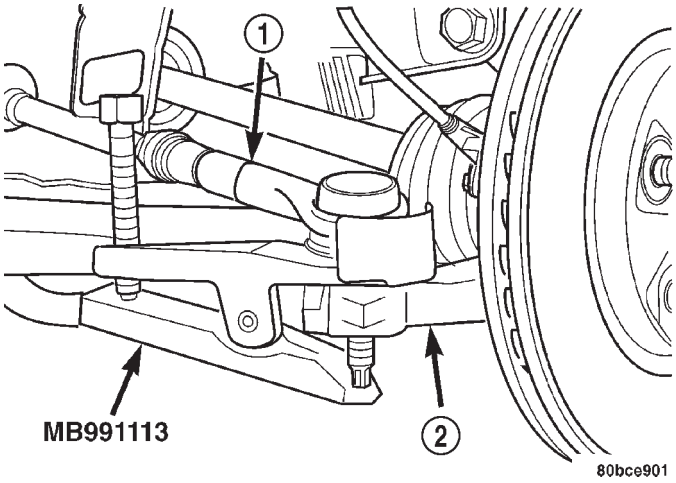

Fig. 5 Tie Rod Removal From Knuckle

1 – OUTER TIE ROD
2 – STEERING KNUCKLE

(9) Remove the tie rod heat shields.

(10) Release the locking tab on the wiring harness connector for the power steering fluid pressure switch, then remove the wiring harness connector from the power steering fluid pressure switch (Fig. 6).

(11) Back out the tube nut securing the power steering fluid pressure hose to the gear (Fig. 7).

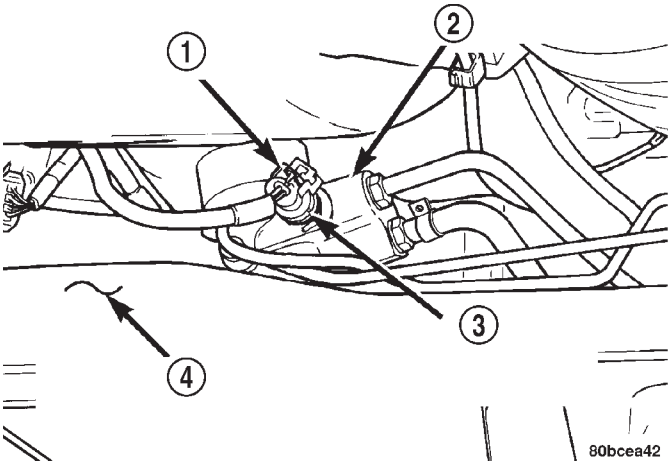

Fig. 6 Power Steering Fluid Pressure Switch

1 – WIRING HARNESS CONNECTOR
2 – POWER STEERING GEAR
3 – POWER STEERING FLUID PRESSURE SWITCH
4 – REAR OF FRONT SUSPENSION CROSSMEMBER

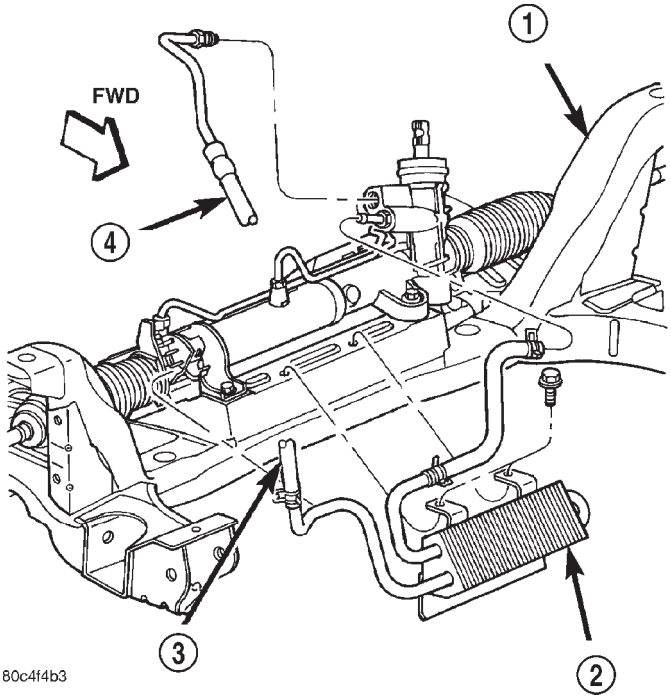

Fig. 7 Cooler And Fluid Hose Mounting

1 – CROSSMEMBER
2 – COOLER
3 – RETURN HOSE
4 – PRESSURE HOSE

(12) Disconnect the cooler hose from the power steering gear fitting (Fig. 7).

(13) Remove the cooler tube from the right routing clip.

REMOVAL AND INSTALLATION (Continued)

(14) Remove the two screws securing the cooler to the front suspension crossmember (Fig. 7). Allow the cooler to hang out of the way.

(15) Remove the pencil strut from the right front corner of the crossmember and body of the vehicle. (Fig. 8). Remove the washer behind the strut from the torque strut bolt.

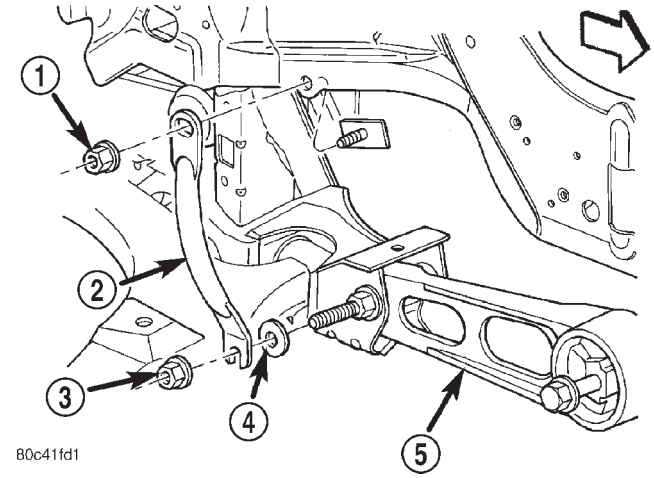

Fig. 8 Strut Mounting

1 – NUT
2 – PENCIL STRUT
3 – NUT
4 – FLAT WASHER
5 – LOWER TORQUE STRUT

(16) Remove the screws fastening the front fascia to the reinforcement as necessary in order to access the drive-belt splash shield forward fastener screw (Fig. 9).

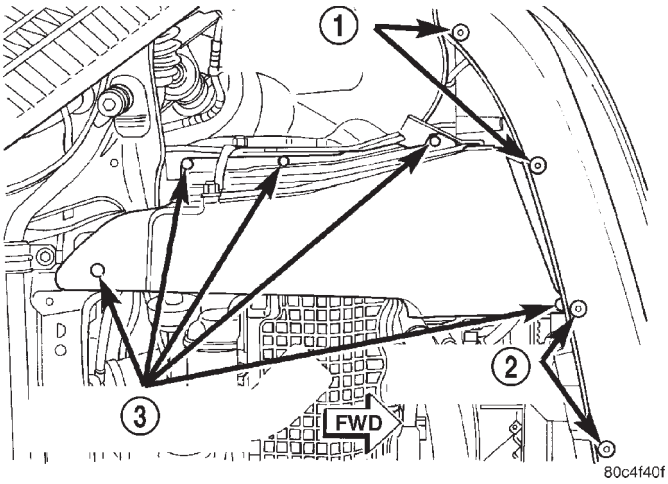

Fig. 9 Fascia And Splash Shield Fasteners

1 – FASCIA FASTENERS
2 – FASCIA FASTENERS
3 – SPLASH SHIELD FASTENERS

(17) Remove the drive-belt splash shield fasteners (Fig. 9). Remove the shield.

(18) Remove the bolt mounting the engine torque strut to the right forward corner of the front suspension crossmember (Fig. 8).

NOTE: Before removing the front suspension crossmember from the vehicle, the location of the crossmember must be scribed on the body of the vehicle (Fig. 9). Do this so the crossmember can be relocated, upon reinstallation, against the body of vehicle in the same location as before removal. If the front suspension crossmember is not reinstalled in exactly the same location as before removal, the preset front wheel alignment settings (caster and camber) will be lost.

(19) Using an awl, scribe a line marking the location of where the front suspension crossmember is mounted against the body of the vehicle (Fig. 10).

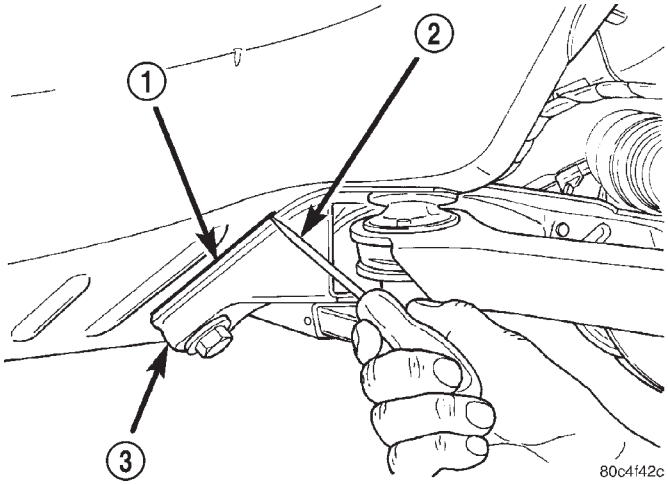

Fig. 10 Marking Crossmember Location

1 – SCRIBED LINE
2 – AWL
3 – CROSSMEMBER

(20) Position a transmission jack under the center of the front suspension crossmember and raise it to support the bottom of the crossmember.

(21) Loosen all six bolts attaching the front suspension crossmember to the frame rails of vehicle. Do not completely remove the two mounting bolts going through the lower control arm rear isolator bushings. They are designed to disengage from the body threads yet stay within the lower control arm rear isolator bushing. Back the two bolts out just enough to disengage the threaded tapping plates in the body of the vehicle. Completely remove the other four bolts.

(22) Lower the front suspension crossmember using the transmission jack enough to allow the

REMOVAL AND INSTALLATION (Continued)

power steering gear to be removed from the rear of the crossmember (Fig. 11). When lowering front suspension crossmember, do not let crossmember hang from lower control arms. The weight should be supported by the transmission jack.

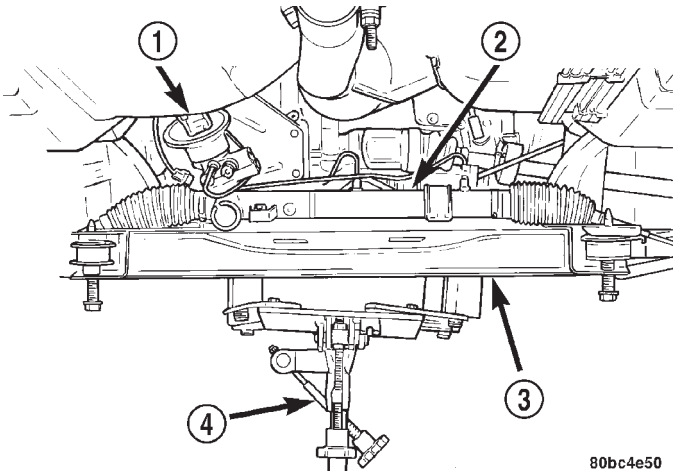

Fig. 11 Crossmember Lowered

1 – STEERING COLUMN LOWER COUPLING
2 – POWER STEERING GEAR
3 – FRONT SUSPENSION CROSSMEMBER
4 – TRANSMISSION JACK

(23) Remove the roll pin securing the steering column lower coupling to the power steering gear pinion shaft using a roll pin punch (Fig. 12). Push the steering column lower coupling up and off of the power steering gear pinion shaft.

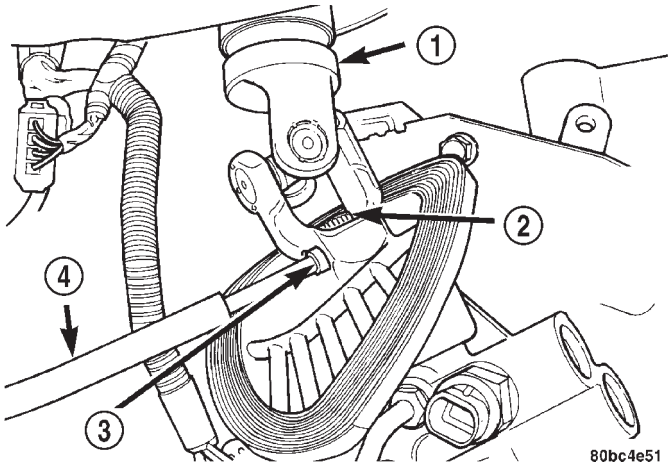

Fig. 12 Coupling Roll Pin

1 – STEERING COLUMN LOWER COUPLING
2 – POWER STEERING GEAR PINION SHAFT
3 – ROLL PIN
4 – ROLL PIN PUNCH

(24) Release the pinion shaft dash cover seal from the tabs cast into the power steering gear housing and remove the seal from the power steering gear (Fig. 13).

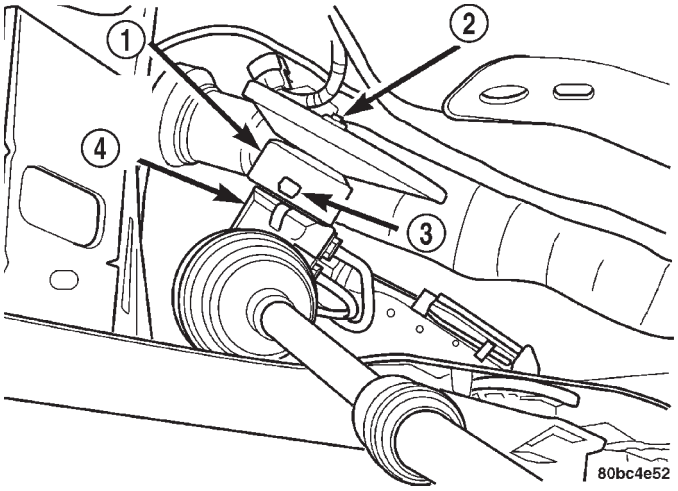

Fig. 13 Pinion Shaft Dash Cover Seal

1 – SEAL
2 – PINION SHAFT
3 – TAB
4 – POWER STEERING GEAR

(25) Loosen and remove the four bolts attaching the power steering gear to the front suspension crossmember (Fig. 1). Remove the power steering gear from the front suspension crossmember.

INSTALLATION

(1) Install the steering gear on the front suspension crossmember (Fig. 1). Install the four power steering gear mounting bolts. Tighten the mounting bolts to a torque of 61 N·m (45 ft. lbs.).

(2) Install the pinion shaft dash cover seal over the power steering pinion shaft and onto the power steering gear housing. Align the holes on each side of the seal with the tabs cast into the power steering gear housing (Fig. 13).

(3) With the steering column lower coupling pushed partway up through its hole in the dash panel, match the flat on the inside of the steering column lower coupling to the flat on the power steering gear pinion shaft and slide the coupling onto the top of the pinion shaft. Align the roll pin hole in the coupling with the groove in the pinion shaft and install the roll pin through the coupling until it is centered (Fig. 12).

(4) Center the power steering gear rack in its travel.

(5) Using the transmission jack, raise the front suspension crossmember and power steering gear until the crossmember contacts its mounting spot against the body and frame rails of the vehicle. As the crossmember is raised, carefully guide the steer-

REMOVAL AND INSTALLATION (Continued)

ing column lower coupling up through its hole in the dash panel.

(6) Start the two crossmember mounting bolts through the lower control arm rear isolator bushings into the tapping plates mounted in the body. Next, install the two front and the two rear mounting bolts attaching front suspension crossmember to frame rails of vehicle. Lightly tighten all six mounting bolts to approximately 2 N·m (20 in. lbs.) to hold the front suspension crossmember in position at this time.

NOTE: When reinstalling the front suspension crossmember back in the vehicle, it is very important that the crossmember be attached to the body in exactly the same spot as when it was removed. Otherwise, the vehicle's wheel alignment settings (caster and camber) will be lost.

(7) Using a soft face hammer, tap the front suspension crossmember back-and-forth or side-to-side until it is aligned with the previously scribed positioning marks on the body of the vehicle (Fig. 10). Once the front suspension crossmember is correctly positioned, tighten the two crossmember mounting bolts through the lower control arm rear isolator bushings to a torque of 250 N·m (185 ft. lbs.), then tighten the four remaining crossmember mounting bolts to a torque of 153 N·m (113 ft. lbs.).

(8) Fasten the engine torque strut to the right forward corner of the front suspension crossmember using its mounting bolt (Fig. 8). Follow the procedure described in the ENGINE section to properly align and tighten the torque strut and it's mounting bolts.

(9) Install the washer on the end of the stud extending from the torque strut bolt (Fig. 8).

(10) Install the pencil strut to the right front corner of the crossmember and body of the vehicle (Fig. 8). Tighten the pencil strut nuts to a torque of 58 N·m (43 ft. lbs.).

(11) Install the drive-belt splash shield and fasteners (Fig. 9).

(12) Install the screws fastening the front fascia to the reinforcement (Fig. 9).

(13) Using a lint free towel, wipe clean the open power steering hose ends and the power steering gear ports. Replace the pressure hose used O-ring with new. Lubricate the O-ring with power steering fluid.

(14) Place the cooler in mounting position and snap the cooler tube going to the gear into the right routing clip on the front of the gear. Close the routing clip.

(15) Install the two screws securing the cooler to the front suspension crossmember (Fig. 7). Tighten the screws to a torque of 10 N·m (90 in. lbs.).

(16) Connect the power steering fluid cooler hose onto the steel gear fitting (Fig. 7). Secure the clamp on the hose past the bead on the steel fitting.

CAUTION: Forward of the steering gear, the power steering fluid pressure hose routes between the front suspension crossmember and the driveshaft. When tightening the pressure hose tube nut to the steering gear, the pressure hose must be positioned (clocked) such that its final routing (after tightened to 47 N·m (35 ft. lbs.)) offers 4–10 mm clearance to the front suspension crossmember (measured at the pressure hose steel-to-rubber coupling).

(17) Attach the power steering fluid pressure hose to its port on the power steering gear (Fig. 7). While making sure the hose is not in contact with any vehicle components (see preceding caution), tighten the pressure hose tube nut at the gear to a torque of 47 N·m (35 ft. lbs.).

(18) Reconnect the wiring harness connector from the power steering fluid pressure switch (Fig. 6). Be sure the locking tab on the wiring harness connector is securely latched.

(19) Perform the following to each outer tie rod:

(a) Place the tie rod heat shield on the knuckle's steering arm, aligning the hole in the shield with the hole in the knuckle and the tangs on the outside of the shield with the outside configuration of the steering arm. The shield should now be facing outboard, away from the power steering gear and tie rod (Fig. 4).

(b) Attach the outer tie rod end to its steering knuckle.

(c) Start the attaching nut onto the stud of the outer tie rod.

(d) While holding the stud of the tie rod stationary with a wrench, tighten the attaching nut (Fig. 4).

(e) Using a crowfoot wrench attached to a torque wrench, tighten the attaching nut to 55 N·m (40 ft. lbs.).

(20) Install the tire and wheel assemblies back on vehicle. Tighten the wheel mounting nuts to 135 N·m (100 ft. lbs.) torque.

(21) Lower the vehicle to ground level.

(22) Install the dash-to-lower coupling seal in place over the lower coupling's plastic collar.

NOTE: Verify that grease is present on the lip of the dash-to-coupling seal where it contacts the coupling's plastic collar.

(23) Inside the passenger compartment, reconnect the steering column lower coupling to the steering column upper coupling (Fig. 3). Install the coupling

REMOVAL AND INSTALLATION (Continued)

pinch bolt and tighten the pinch bolt nut to a torque of 28 N·m (250 in. lbs.). Install the pinch bolt retainer pin.

(24) Remove the steering wheel holder.

(25) While looking under the instrument panel at the lower coupling, rotate the steering wheel back-and-forth to verify that the lower coupling does not squeak against the dash-to-coupling seal.

(26) Install the knee blocker.

(27) Install the silencer pad below the knee blocker panel below the steering column.

(28) Perform the POWER STEERING PUMP INITIAL OPERATION service procedure which can be found in the POWER STEERING PUMP section to properly fill and bleed the power steering system.

(29) Check for fluid leaks.

(30) Adjust the front toe setting on the vehicle. Refer to WHEEL ALIGNMENT in the SUSPENSION section.

OUTER TIE ROD

REMOVAL

(1) Raise the vehicle. Refer to HOISTING in the LUBRICATION AND MAINTENANCE group in this service manual for the correct lifting procedure.

(2) Remove the tire and wheel assembly from the vehicle.

(3) Loosen tie rod jam nut (Fig. 14). Thread the jam nut far enough up the inner tie rod to pull the collar away from the outer tie rod end. Pull the collar off the end of the outer tie rod.

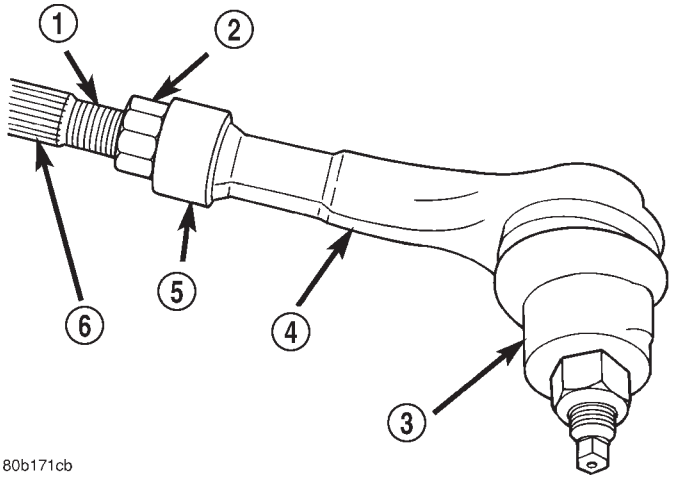

Fig. 14 Outer Tie Rod

1 – INNER TIE ROD
2 – OUTER TIE ROD JAM NUT
3 – STEERING KNUCKLE
4 – OUTER TIE ROD END
5 – COLLAR
6 – INNER TIE ROD SERRATION

(4) Remove the nut attaching the outer tie rod end to steering knuckle (Fig. 15). Remove the nut by holding the tie rod stud stationary while loosening and removing the nut with a wrench.

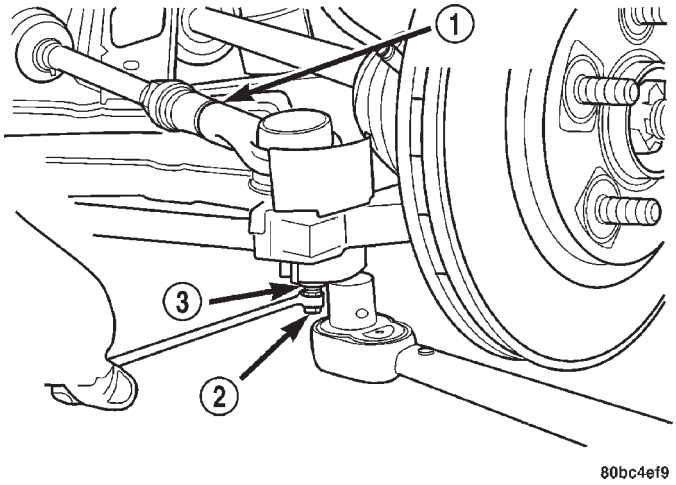

Fig. 15 Tools On Outer Tie Rod Nut

1 – OUTER TIE ROD
2 – STUD
3 – NUT

(5) Remove the outer tie rod from the steering knuckle using Remover, Special Tool MB991113 (Fig. 16).

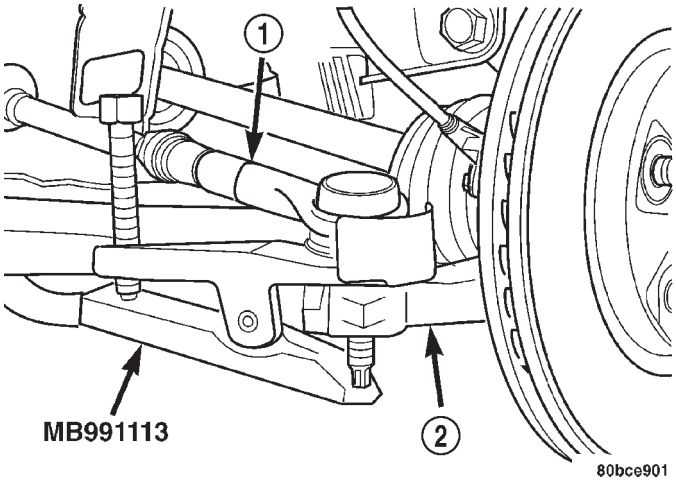

Fig. 16 Tie Rod Removal From Knuckle

1 – OUTER TIE ROD
2 – STEERING KNUCKLE

(6) Remove the tie rod heat shield.

(7) Remove the outer tie rod from the inner tie rod by unthreading it.

INSTALLATION

(1) Install the jam nut on the inner tie rod threads if it is not already installed (Fig. 14).

REMOVAL AND INSTALLATION (Continued)

NOTE: Be sure the collar is installed on the inner tie rod with the flat end of the collar against jam nut and the open end of the collar facing the outer tie rod end.

(2) Install the collar on the inner tie rod (Fig. 14).

(3) Thread the outer tie rod onto the inner tie rod.

(4) Position the collar around the end of the outer tie rod (Fig. 14).

(5) Thread the jam nut down the inner tie rod far enough to hold the collar in place on the outer tie rod. Do not tighten the jam nut.

(6) Place the tie rod heat shield on the knuckle's steering arm, aligning the hole in the shield with the hole in the knuckle and the tangs on the outside of the shield with the outside configuration of the steering arm. The shield should now be facing outboard, away from the power steering gear and tie rod (Fig. 15).

(7) Attach the outer tie rod end to the steering knuckle.

(8) Start the attaching nut onto the stud of the outer tie rod.

(9) While holding the stud of the tie rod stationary with a wrench, tighten the attaching nut (Fig. 15).

(10) Using a crowfoot wrench attached to a torque wrench, tighten the attaching nut to 55 N·m (40 ft. lbs.).

(11) Install the tire and wheel assembly. Tighten the wheel mounting nuts to a torque of 135 N·m (100 ft. lbs.).

(12) Lower the vehicle.

(13) Adjust the front toe setting on the vehicle. Refer to WHEEL ALIGNMENT in the SUSPENSION service manual group.

SPECIFICATIONS

POWER STEERING GEAR FASTENER TORQUE

DESCRIPTION	TORQUE
Outer Tie Rod:	
Steering Knuckle Nut	55 N·m (40 ft. lbs.)
Tie Rod Jam Nut	75 N·m (55 ft. lbs.)
Steering Gear:	
Mounting Bolts	61 N·m (45 ft. lbs.)
Tube Nuts At Gear	47 N·m (35 ft. lbs.)
Suspension Crossmember (Front):	
Mounting Bolts Through Lower Control Arm	250 N·m (185 ft. lbs.)
All Other Mounting Bolts	153 N·m (113 ft. lbs.)

SPECIAL TOOLS

POWER STEERING GEAR

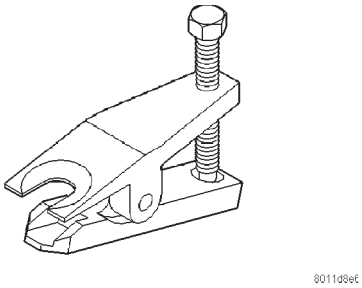

Remover MB991113

STEERING COLUMN

TABLE OF CONTENTS

	page
DESCRIPTION AND OPERATION	
STEERING COLUMN	34
STEERING COLUMN LOWER COUPLING	34
DIAGNOSIS AND TESTING	
STEERING COLUMN	35
STEERING COLUMN LOWER COUPLING	35
REMOVAL AND INSTALLATION	
SERVICE WARNINGS AND CAUTIONS	35
STEERING COLUMN	36
STEERING COLUMN LOWER COUPLING	42
SPECIFICATIONS	
STEERING COLUMN FASTENER TORQUE	45

DESCRIPTION AND OPERATION

STEERING COLUMN

DESCRIPTION

This vehicle is equipped with a tilt type steering column. The steering column is designed to be serviced only as complete assembly if an internal component is found to be defective (Fig. 1). The shaft, bearings and upper coupling are all serviced with the column.

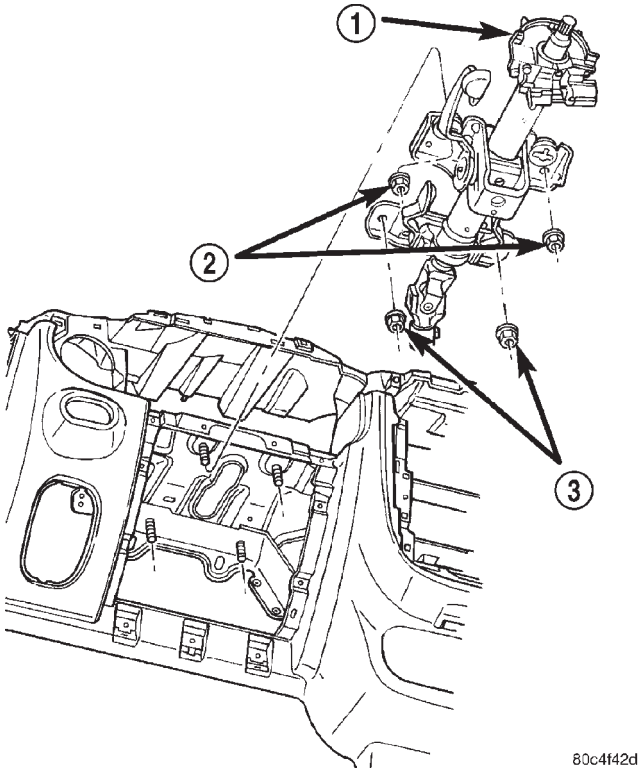

Fig. 1 Steering Column

1 – STEERING COLUMN
2 – UPPER MOUNTING NUTS
3 – LOWER MOUNTING NUTS

The replaceable components on the steering column assembly are:

- The key cylinder
- The ignition switch
- The multi-function switch
- The clockspring
- The trim shrouds
- The steering wheel
- The driver airbag module

These components can be serviced without removal of the steering column from the vehicle. Refer to the appropriate section for servicing these components separately.

OPERATION

Turning of the steering wheel is transferred through the steering column, upper and lower couplings to the power steering gear. The gear then moves the steering knuckles, steering the vehicle.

The steering column has an anti-theft provision. With the key/lock cylinder turned to the LOCK position, and the key removed, the steering shaft (and steering wheel) cannot be turned more than 180 degrees before locking.

STEERING COLUMN LOWER COUPLING

DESCRIPTION

This vehicle uses an lower coupling in the steering system of the vehicle. The lower coupling is located between the steering column's upper coupling and the input shaft of the steering gear. It has a universal joint at each end and a collapsible sliding joint near the center (Fig. 2). A collar is also placed near the center of shaft.

OPERATION

The steering column intermediate shaft connects the steering column' shaft to the steering gear input shaft through the universal joints at each end. The universal joints on each end of the steering column

DESCRIPTION AND OPERATION (Continued)

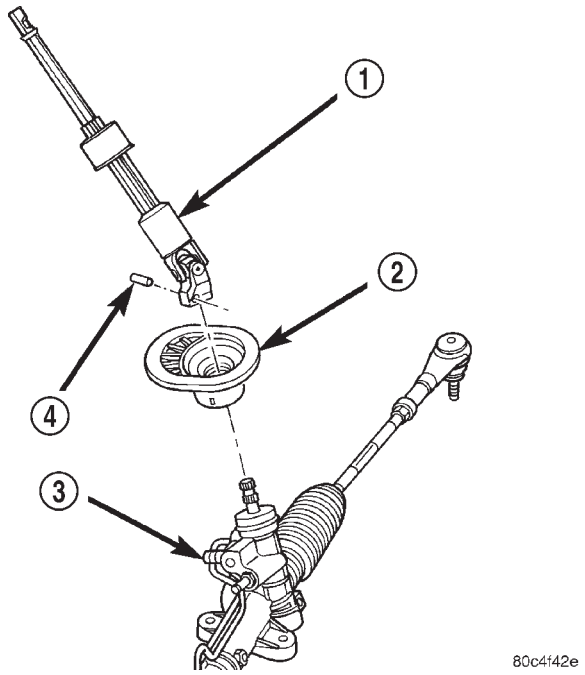

Fig. 2 Steering Column Lower Coupling

1 – LOWER COUPLING
2 – SEAL
3 – STEERING GEAR
4 – ROLL PIN

lower coupling allow for the misalignment of the steering column and the steering gear.

There is a collapsible sliding joint located in the center of the lower coupling allows the shaft to collapse (shorten) between the universal joints (Fig. 2). It is there so if the vehicle is involved in a front end collision resulting in rearward movement of the steering gear, the lower coupling shaft will collapse.

The collar mounted near the center of the shaft is there to provide a clean surface for the dash seal to ride upon sealing the gap between the shaft and the dash panel.

DIAGNOSIS AND TESTING

STEERING COLUMN

For diagnosis of conditions relating to the steering column, refer to the STEERING SYSTEM DIAGNOSIS CHARTS in DIAGNOSIS AND TESTING in the POWER STEERING section of this service manual group.

STEERING COLUMN LOWER COUPLING

The steering column lower coupling and its flexible joint must be inspected whenever any of the following conditions exist:

- After the vehicle has been involved in a collision which deploys the airbag, regardless of the extent of damage to the vehicle.
- After the vehicle has been involved in an undercarriage impact which results in any type of damage or bending of front suspension components or the frame of the vehicle.
- Under any conditions which result in the steering gear, steering column or steering column shaft receiving a force great enough to move the steering column or shaft forward or rearward in the vehicle.

Inspect the lower coupling shaft and its flexible joint for any of the following conditions:

- seized or binding bearings
- loose bearing stakes
- bearings not fully seated
- shaft bent

Upon inspection, if any of the above conditions exist, replacement of the entire steering column lower coupling is necessary.

REMOVAL AND INSTALLATION

SERVICE WARNINGS AND CAUTIONS

WARNING: BEFORE BEGINNING ANY SERVICE PROCEDURES THAT INVOLVES REMOVING THE AIR BAG. REMOVE AND ISOLATE THE NEGATIVE (-) BATTERY CABLE (GROUND) FROM THE VEHICLE BATTERY. THIS IS THE ONLY SURE WAY TO DISABLE THE AIR BAG SYSTEM. FAILURE TO DO THIS COULD RESULT IN ACCIDENTAL AIR BAG DEPLOYMENT AND POSSIBLE PERSONAL INJURY.

WARNING: THE AIR BAG SYSTEM IS A SENSITIVE, COMPLEX ELECTRO-MECHANICAL UNIT. BEFORE ATTEMPTING TO DIAGNOSE, REMOVE OR INSTALL THE AIR BAG SYSTEM COMPONENTS YOU MUST FIRST DISCONNECT AND ISOLATE THE BATTERY NEGATIVE (GROUND) CABLE. FAILURE TO DO SO COULD RESULT IN ACCIDENTAL DEPLOYMENT OF THE AIR BAG AND POSSIBLE PERSONAL INJURY. THE FASTENERS, SCREWS, AND BOLTS, ORIGINALLY USED FOR THE AIR BAG COMPONENTS, HAVE SPECIAL COATINGS AND ARE SPECIFICALLY DESIGNED FOR THE AIR BAG SYSTEM. THEY MUST NEVER BE REPLACED WITH ANY SUBSTITUTES. ANYTIME A NEW FASTENER IS NEEDED, REPLACE WITH THE CORRECT FASTENERS PROVIDED IN THE SERVICE PACKAGE OR FASTENERS LISTED IN THE PARTS BOOKS. BEFORE SERVICING A STEERING COLUMN EQUIPPED WITH AN AIR BAG, REFER TO GROUP 8M, ELECTRICAL FOR PROPER AND SAFE SERVICE PROCEDURES.

REMOVAL AND INSTALLATION (Continued)

WARNING: WHEN HANDLING AN UNDEPLOYED AIR BAG MODULE DURING SERVICING OF THE STEERING COLUMN, THE FOLLOWING PRECAUTIONS SHOULD BE OBSERVED:

- **AT NO TIME SHOULD ANY SOURCE OF ELECTRICITY BE PERMITTED NEAR THE INFLATOR ON THE BACK OF THE AIR BAG MODULE.**
- **WHEN CARRYING A LIVE MODULE, THE TRIM COVER SHOULD BE POINTED AWAY FROM THE BODY TO MINIMIZE INJURY IF THE MODULE SHOULD ACCIDENTLY DEPLOY.**
- **IF THE AIR BAG MODULE IS PLACED ON A BENCH OR OTHER SURFACE, THE PLASTIC COVER SHOULD BE FACE-UP TO MINIMIZE MOVEMENT, IN CASE OF ACCIDENTAL DEPLOYMENT.**

CAUTION: Safety goggles should be worn at all times when working on steering columns.

CAUTION: Disconnect negative (ground) cable from the battery, before servicing any column component.

CAUTION: Do not attempt to remove the pivot pins to disassemble the tilting mechanism. Damage will occur.

STEERING COLUMN

NOTE: Before proceeding with this removal and installation procedure, review SERVICE WARNINGS AND CAUTIONS at the beginning of REMOVAL AND INSTALLATION in this section.

REMOVAL

WARNING: WHEN AN UNDEPLOYED AIRBAG MODULE IS TO BE REMOVED FROM THE STEERING WHEEL, FIRST DISCONNECT THE BATTERY GROUND CABLE AND ISOLATE IT. ALLOW THE SYSTEM CAPACITOR TO DISCHARGE FOR A MINIMUM OF TWO MINUTES, THEN BEGIN THE AIRBAG REMOVAL.

(1) Disconnect the negative (-) cable from the battery and isolate the cable.

(2) Before beginning removal of the steering column, be sure the front wheels of vehicle are in the STRAIGHT-AHEAD position.

(3) Remove the ignition key from the ignition key cylinder.

(4) Remove the silencer pad below the knee blocker panel below the steering column.

(5) Fold down and remove the knee blocker.

(6) Remove the two screws attaching the lower shroud to the steering column and upper shroud (Fig. 3). After removing the screws, unclip the shrouds from each other by applying hand pressure along the seams where the shrouds connect on the sides, then remove the lower shroud from the upper shroud and column. Remove the upper shroud from the steering column.

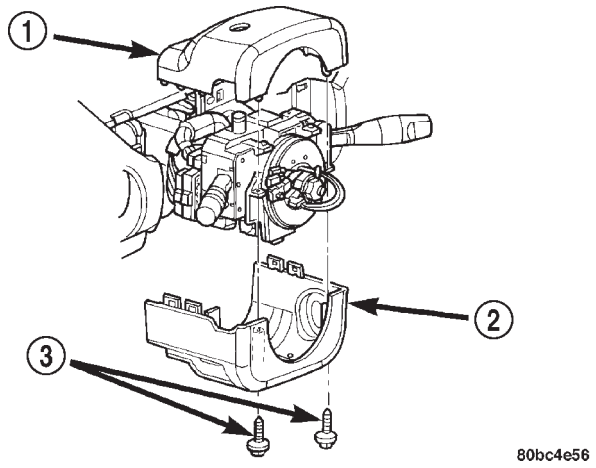

Fig. 3 Steering Column Shrouds

1 – UPPER SHROUD
2 – LOWER SHROUD
3 – MOUNTING SCREWS

(7) Use the following to properly remove the air bag module from the column:

(a) Using a pair of 90° internal snap ring pliers or equivalent, pry open the retaining clip (Fig. 4) at the top rear of the steering wheel to release the top retaining pin (Fig. 5). Pull or press rearward on the airbag module while doing this. The pin will disengage.

(b) Using a pair of 90° internal snap ring pliers or equivalent, pry open the retaining clip (Fig. 6) at the bottom rear of the steering wheel and at he same time gently pry the pin away from the retaining clip using a pocket screwdriver or equivalent, so it can slide through the middle of the clip. Use the screwdriver to push the pin through the clip.

(c) Pull the module outward enough to expose the wire harness connections. Disconnect the two harness connectors on the module (squib and horn feed) (Fig. 7).

(d) Remove the airbag module from the vehicle.

(8) Disconnect the speed control switch wiring harness connector (Fig. 7).

(9) Holding the steering wheel firmly in place, remove the steering wheel retaining bolt from the steering column shaft in the center of the steering wheel (Fig. 7).

REMOVAL AND INSTALLATION (Continued)

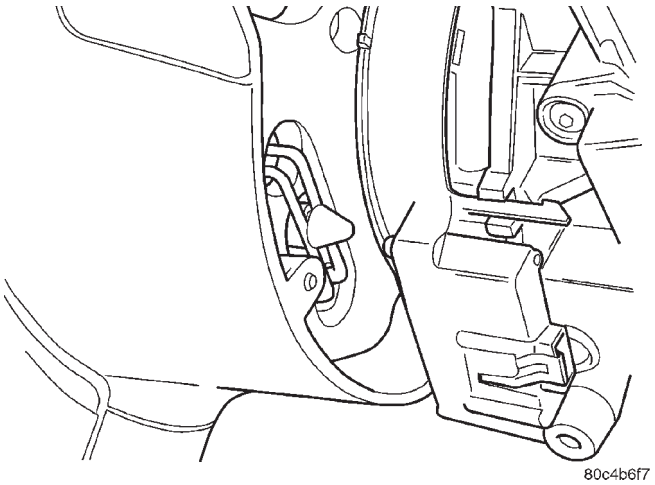

Fig. 4 Driver Airbag Pin Retaining Clip

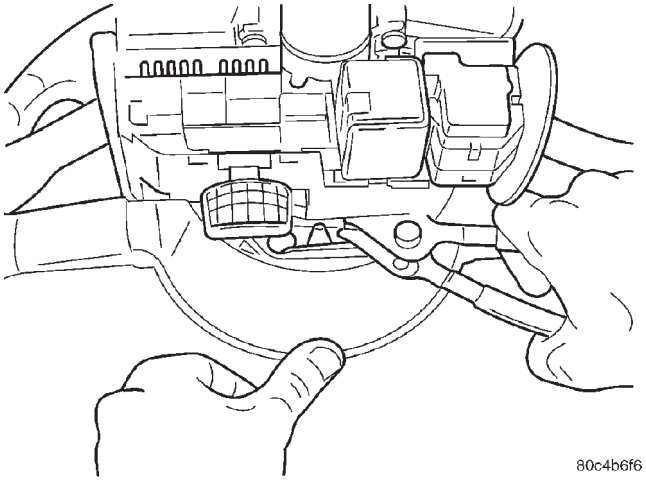

Fig. 5 Upper Driver Airbag Pin Retaining Clip Removal/Installation

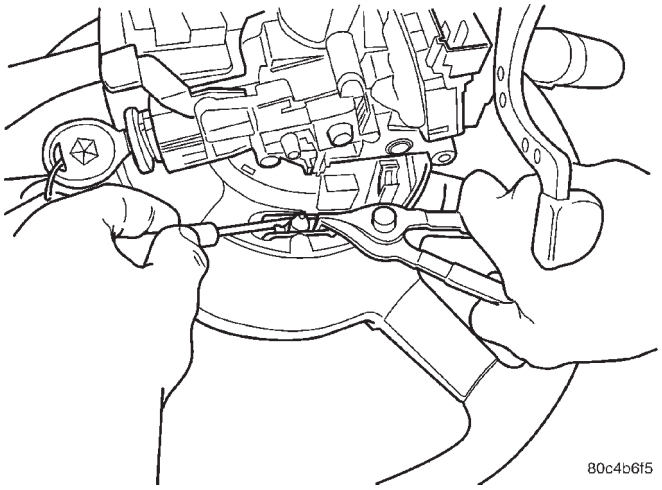

Fig. 6 Lower Driver Airbag Pin Retaining Clip Removal/Installation

CAUTION: When installing a wheel puller on the steering wheel, be sure the puller bolts are fully seated in the threaded holes on the steering wheel.

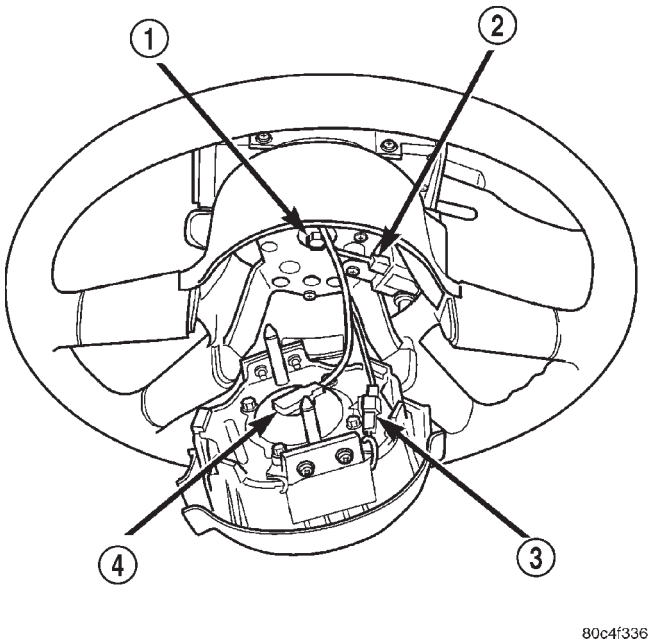

Fig. 7 Electrical Connectors

1 – STEERING WHEEL RETAINING BOLT
2 – SPEED CONTROL SWITCH CONNECTOR
3 – HORN SWITCH CONNECTOR
4 – AIRBAG CONNECTOR

If the bolts are not fully seated in the threaded holes, the threads may be stripped out of the steering wheel when attempting to remove the steering wheel. Take care not to over-thread the puller bolts such that they contact the clockspring possibly damaging it.

Also, threading the retaining bolt back in the end of the shaft until approximately 13 mm (0.5 in.) of thread is showing between the wheel and the head of the bolt allows a safe reaction surface for the puller to work against.

(10) Thread the wheel retaining bolt back into the end of the shaft until approximately 13 mm (0.5 in.) of thread is showing between the wheel and the head of the bolt.

(11) Install a steering wheel puller on the steering wheel.

CAUTION: Do not bump or hammer on steering wheel or steering column shaft when removing steering wheel from steering column.

(12) Holding the steering wheel firmly in the STRAIGHT-AHEAD position, remove steering wheel from the steering column shaft using the puller. Remove the wheel retaining bolt and the steering wheel.

(13) At the base of the column, remove the steering column coupling retainer pin, back off the pinch

REMOVAL AND INSTALLATION (Continued)

bolt nut, and remove the steering column coupling pinch bolt (Fig. 8) (the pinch bolt nut is caged to the coupling and is not removable). Separate the upper and lower steering column couplings.

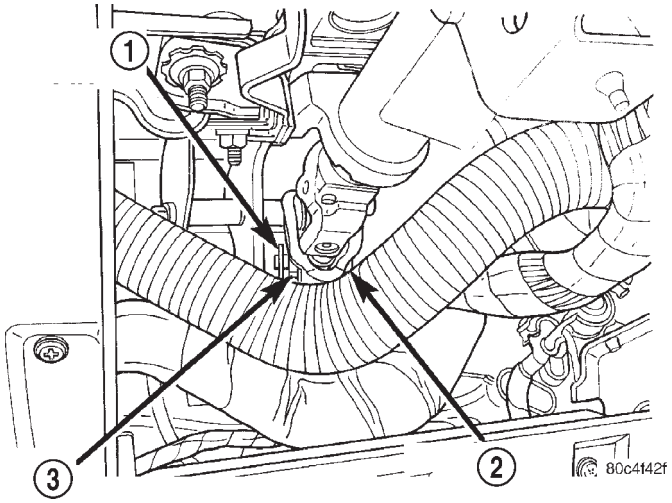

Fig. 8 Coupling Connection

1 – RETAINING PIN
2 – PINCH BOLT
3 – NUT

(14) If the vehicle is equipped with a automatic transaxle, disconnect the automatic transaxle ignition interlock cable from the steering column. Depress the tab on top of the cable connector and remove the cable from the back side of the steering column ignition cylinder housing (Fig. 9).

NOTE: If the same steering column is to be reinstalled, clamp the tilt lever to lock the column in place so that it can be easily reinstalled in the same orientation.

(15) Remove the two lower mounting nuts attaching the steering column to the instrument panel (Fig. 10).

(16) Remove the two upper mounting nuts attaching the steering column to the instrument panel (Fig. 10).

(17) Lower the steering column away from the instrument panel.

(18) Disconnect the wiring harness electrical connector from the clockspring (Fig. 11).

(19) Disconnect the wiring harness electrical connectors from the multi-function switch, windshield wiper switch, and ignition switch (Fig. 12).

(20) If the vehicle is equipped with a Sentry Key Immobilizer Module (SKIM), disconnect its electrical connector (Fig. 13).

(21) Remove the steering column from the vehicle.

(22) If the steering column is being replaced, perform the following:

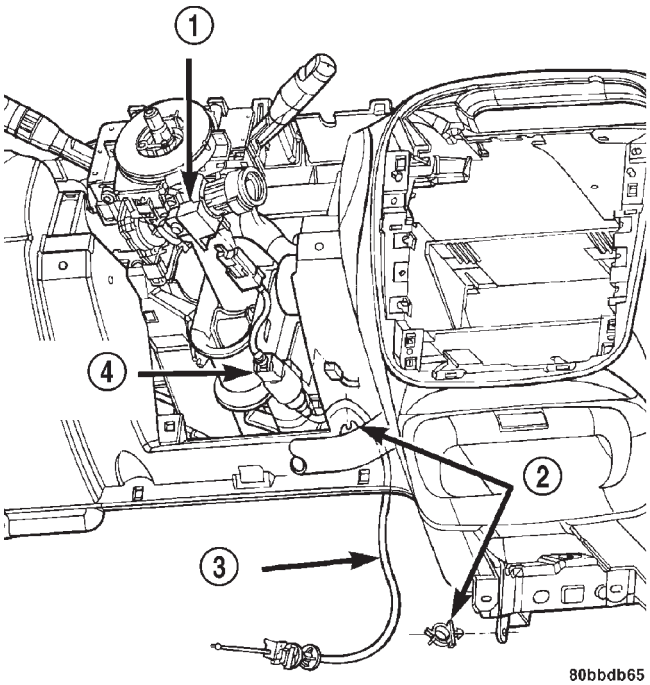

Fig. 9 Interlock Cable

1 – IGNITION SWITCH
2 – CLIP
3 – INTERLOCK CABLE
4 – BTSI SOLENOID

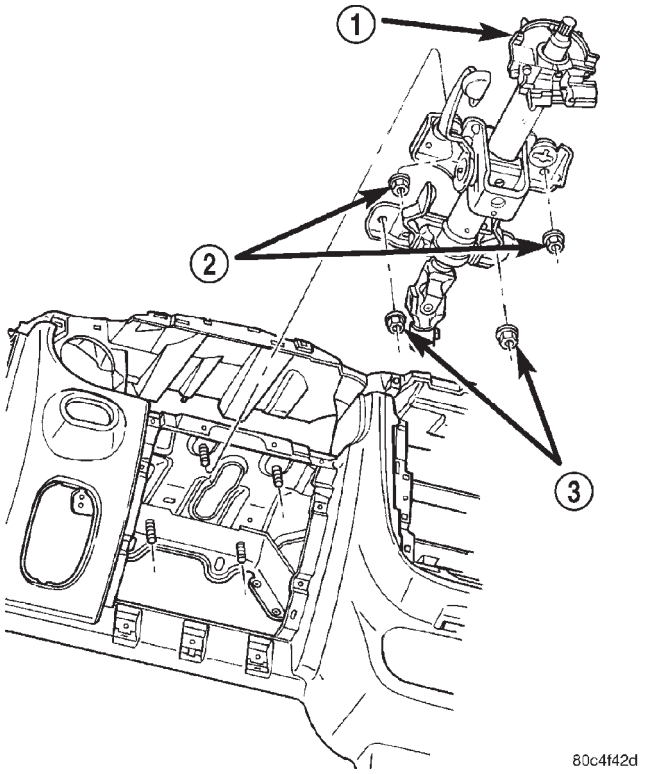

Fig. 10 Steering Column Mounting Nuts

1 – STEERING COLUMN
2 – UPPER MOUNTING NUTS
3 – LOWER MOUNTING NUTS

REMOVAL AND INSTALLATION (Continued)

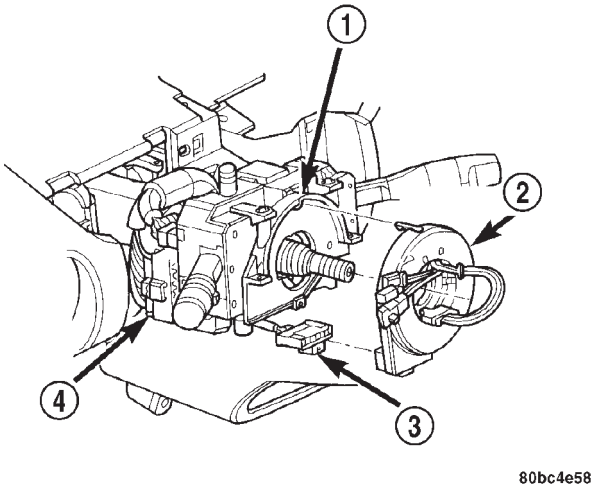

Fig. 11 Clockspring Electrical Connector

1 – STEERING COLUMN
2 – CLOCKSPRING
3 – CLOCKSPRING ELECTRICAL CONNECTOR
4 – IGNITION SWITCH ELECTRICAL CONNECTOR

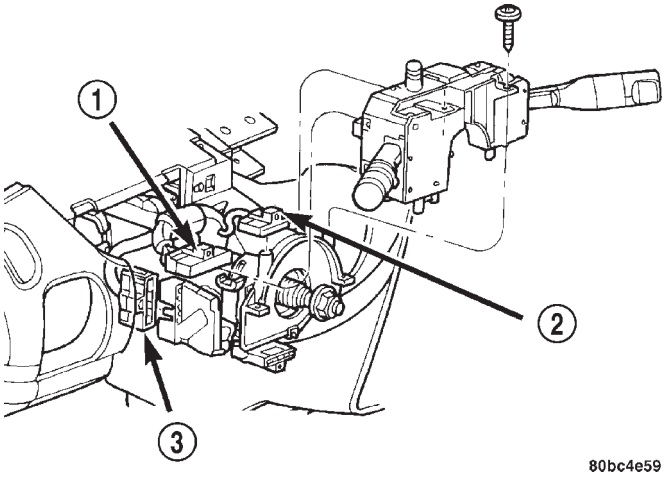

Fig. 12 Electrical Connectors

1 – MULTI-FUNCTION SWITCH ELECTRICAL CONNECTOR
2 – WINDSHIELD WIPER SWITCH ELECTRICAL CONNECTOR
3 – IGNITION SWITCH ELECTRICAL CONNECTOR

(a) Remove the ignition key cylinder from the steering column. To do this, insert the key and turn the ignition key cylinder to the ON position. Next, depress the retaining tab and remove the Ignition key cylinder by pulling the key and cylinder straight out of the column together (Fig. 14).

(b) Disengage the latch hooks on the back of the clockspring by lifting the clockspring slightly to clear the column housing with the top latch hook. Next, lower the clockspring slightly to do the same for the lower latch hook (Fig. 15). Remove the clockspring from the column.

(c) Remove the two screws securing the multi-function/windshield wiper switch to the steering column (Fig. 16). Pull the switch straight away from the column to remove it.

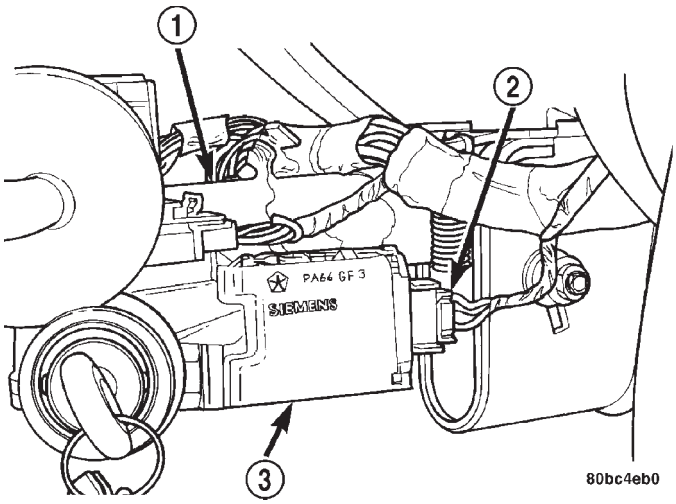

Fig. 13 SKIM Electrical Connector

1 – STEERING COLUMN
2 – SKIM ELECTRICAL CONNECTOR
3 – SKIM

(d) If the column is equipped with a SKIM, remove the module from the column by removing the two mounting screws and sliding the SKIM off the non-halo trim ring (Fig. 17).

(e) Remove the non-halo trim ring from the column by unclipping it from the ignition cylinder housing (Fig. 17).

(f) If necessary, remove the ignition switch from the steering column by first removing the mounting screw (Fig. 18). Once the screw is removed, pull the switch straight out away from the column ignition cylinder housing.

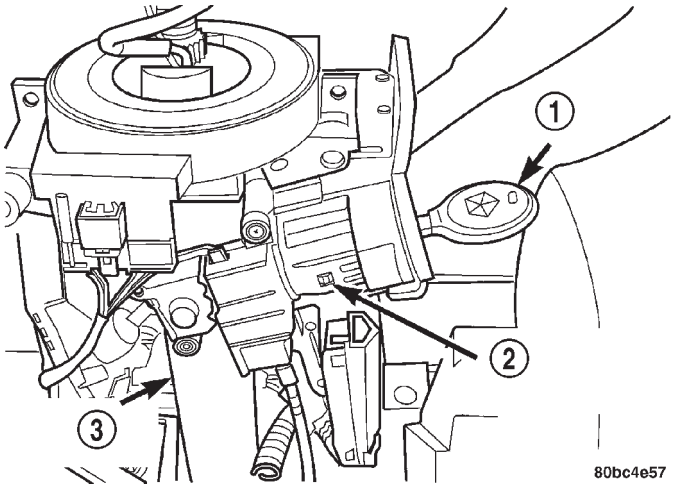

Fig. 14 Ignition Key Cylinder Retaining Tab

1 – IGNITION KEY
2 – RETAINING TAB
3 – STEERING COLUMN

REMOVAL AND INSTALLATION (Continued)

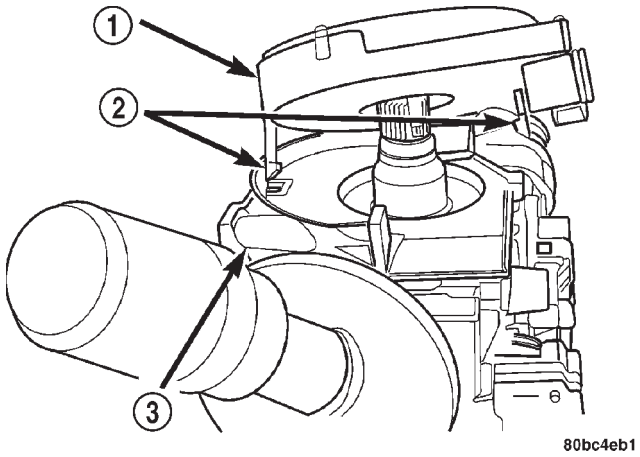

Fig. 15 Clockspring Latch Hooks

1 – CLOCKSPRING
2 – LATCH HOOKS
3 – STEERING COLUMN

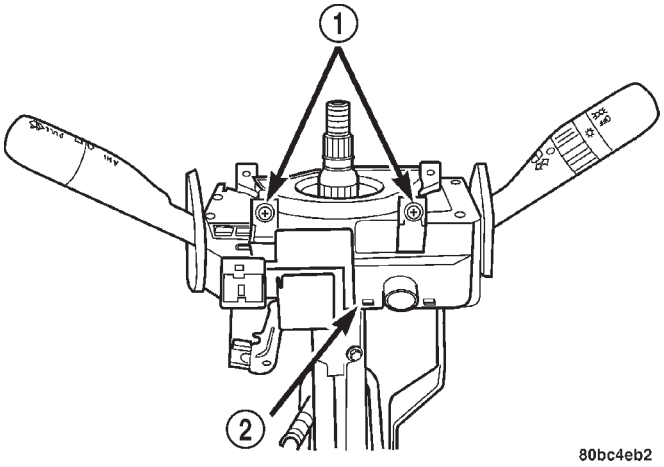

Fig. 16 Multi-function/Wiper Switch Mounting

1 – MOUNTING SCREWS
2 – MULTI-FUNCTION/WINDSHIELD WIPER SWITCH ASSEMBLY

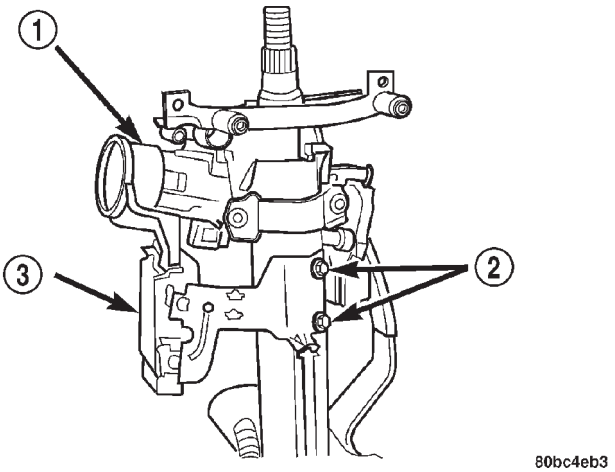

Fig. 17 SKIM Mounting

1 – HALO TRIM RING
2 – MOUNTING SCREWS
3 – SKIM

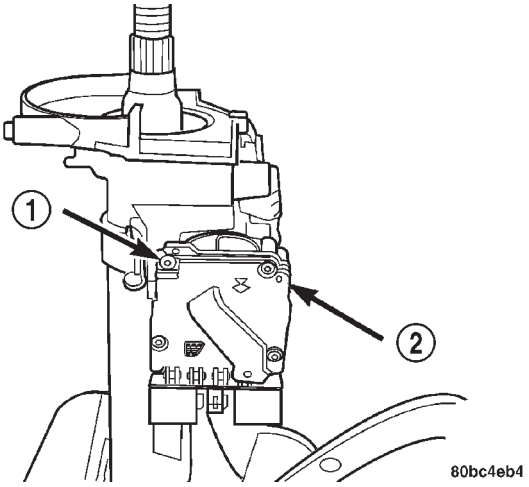

Fig. 18 Ignition Switch Mounting

1 – MOUNTING SCREW
2 – IGNITION SWITCH

INSTALLATION

(1) If the steering column is being replaced, perform the following on the column before installing it on the vehicle:

(a) Ensure the ignition switch is positioned in the ON position if the ignition switch needs to be installed.

(b) If necessary, Install the ignition switch on the steering column by pushing the tapered end onto the shaft and steering column ignition cylinder housing. Install the screw securing the switch to the column (Fig. 18).

(c) Install the non-halo trim ring on the column until its tabs snap into place on the ignition cylinder housing (Fig. 17).

(d) If the column is equipped with a Sentry Key Immobilizer Module (SKIM), install the module on the column by sliding the module onto the non halo trim ring and installing the two mounting screws (Fig. 17). Tighten the mounting screws to a torque of 3 N·m (25 in. lbs.).

(e) Position the multi-function/windshield wiper switch in onto the top of the column and install the two screws securing the switch in place (Fig. 16).

(f) Place the clockspring onto the end of the column engaging the clockspring latch hooks into the column (Fig. 15).

(g) Install the ignition key cylinder in the steering column. To do this, first position the key cylinder in the ON position (with the key in it) so the retaining tab can be depressed. Push key cylinder

REMOVAL AND INSTALLATION (Continued)

into the column ignition cylinder housing until the retaining tab locks into place (Fig. 14).

NOTE: When installing a tilt column, do not release the tilt lever from the locked position until after the column is installed on the instrument panel.

(2) Install the steering column into steering column access opening in the lower instrument panel.

(3) Align the slots in the mounting brackets on the steering column with the studs in the instrument panel (Fig. 10) Loosely attach the column to the instrument panel lower mounting studs using the two lower mounting nuts.

(4) If the vehicle is equipped with a SKIM, Connect its wiring harness electrical connector (Fig. 13).

(5) Connect the wiring harness electrical connectors to the multi-function switch, windshield wiper switch, and ignition switch (Fig. 12).

(6) Connect the wiring harness electrical connector to the clockspring (Fig. 11).

(7) Lift the column into mounting position on the instrument panel and install the two upper mounting nuts (Fig. 10). Tighten all four (upper and lower) mounting nuts to a torque of 17 N·m (150 in. lbs.).

(8) If the vehicle is equipped with an automatic transaxle, connect the automatic transaxle ignition interlock cable to the steering column by pushing the end of the cable into the back side of the ignition cylinder housing until it snaps into place (Fig. 9).

(9) If not already positioned, position the steering column shaft in the correct position for mounting to the lower coupling. To do this, turn the steering wheel end of the shaft until the missing spline area on that end of the shaft faces straight up.

(10) Verify the front wheels of vehicle are in the STRAIGHT-AHEAD position.

NOTE: Do not tighten the coupling pinch bolt anytime the vehicle is not at curb riding height. It may cause unwanted conditions within the steering column if the vehicle is suspended in any manner when the pinch bolt is tightened.

(11) Reconnect the steering column lower coupling to the steering column upper coupling (Fig. 8). Install the coupling pinch bolt an tighten the pinch bolt nut to a torque of 28 N·m (250 in. lbs.). Install the pinch bolt retainer pin.

(12) Install the knee blocker.

(13) Install the silencer pad below the knee blocker panel.

CAUTION: If there is any question as to whether the clockspring is in the centered position of travel, the clockspring needs to be recentered before installing the steering wheel. If the clockspring is not centered, it may be overextended, causing the clockspring to become inoperative.

(14) If necessary, recenter the clockspring. To center the clockspring, use the following procedure:

- Using your fingers, rotate the clockspring rotor in the CLOCKWISE DIRECTION to the end of travel. Do not apply excessive torque.
- From the end of travel, rotate the rotor two full turns and an additional one half turn in the COUNTERCLOCKWISE DIRECTION. (The wires should end up toward the top of the clockspring).

CAUTION: Do not install the steering wheel onto the shaft of the steering column by driving it onto the shaft.

(15) Feed the clockspring wiring leads through the hole in the steering wheel. Align the steering wheel's wide mounting spline with the steering column shaft missing spline area and push the wheel onto the shaft. Make sure the clockspring lines up with the back of the wheel and does not bind.

(16) Install the steering wheel retaining bolt and tighten it until the steering wheel is fully installed on shaft. Tighten the steering wheel retaining bolt to a torque of 54 N·m (40 ft. lbs.).

(17) Connect the wiring harness connector to the speed control switch (Fig. 7).

(18) Connect the squib wire to the module (Fig. 7). Make airbag connection by pressing straight in on the connector. The connector should be fully seated. Feel for positive snap to assure positive connection.

(19) Connect the horn switch electrical connector.

(20) Rotate the steering wheel 90 degrees in either direction.

(21) Place driver airbag module into position and firmly snap both pins into place. **Listen for the audible click at each pin. Visually check that both pins are properly seated between the legs of the clips.**

(22) Install the upper and lower steering column shrouds onto the steering column (Fig. 3). Snap the two shrouds together, then install and tighten the two screws securing the shrouds to the column.

NOTE: When reconnecting the battery on a vehicle that has had the airbag module removed, the following procedure should be used.

(23) Reconnect the ground cable to the negative post of the battery in the following manor:

- Connect a scan tool (DRBIII®) to the data link diagnostic connector located below the steering column.

REMOVAL AND INSTALLATION (Continued)

• Turn the ignition key to the ON position. Exit the vehicle with the scan tool leaving the scan tool harness plugged in.

• Ensuring that there are no occupants in the vehicle, connect the ground (-) cable to the negative post of the battery.

• Using the scan tool, read and record any fault codes. Refer to the Driver And Passenger Airbag System diagnostic information if any faults are found.

• Erase any stored faults if there are no active fault codes. If a problem exists, the fault code will not erase.

• Reach around behind the steering wheel (just in front of the instrument cluster) and turn the ignition key to OFF, then back ON while observing the instrument cluster airbag lamp. It should go on for six to eight seconds, then go out. This will indicate that the airbag system is functioning normally. If airbag warning lamp fails to light, blinks on and off, or goes on and stays on, there is an airbag system malfunction. Refer to the Body Diagnostic Procedures to diagnose the system malfunction.

(24) Turn the key to OFF and remove the scan tool from the vehicle.

(25) Test the operation of the horn, wipers and any other functions that are steering column operated. If applicable, reset the radio and the clock.

(26) If the steering column is a tilt column, verify the tilt mechanism operates properly.

(27) Road test the vehicle to ensure proper operation of the steering system and the speed control system.

STEERING COLUMN LOWER COUPLING

NOTE: Before proceeding with this removal and installation procedure, review SERVICE WARNINGS AND CAUTIONS at the beginning of REMOVAL AND INSTALLATION in this section.

REMOVAL

(1) Place the steering wheel in the STRAIGHT-AHEAD position. Using a steering wheel holder, lock the steering wheel in place to keep it from rotating (Fig. 19). This keeps the clockspring in the proper orientation.

(2) Remove the silencer pad below the knee blocker panel below the steering column.

(3) Fold down and remove the knee blocker.

(4) Remove the steering column coupling retainer pin, back off the pinch bolt nut, and remove the steering column coupling pinch bolt (Fig. 20)(the pinch bolt nut is caged to the coupling and is not removable). Separate the upper and lower steering column couplings.

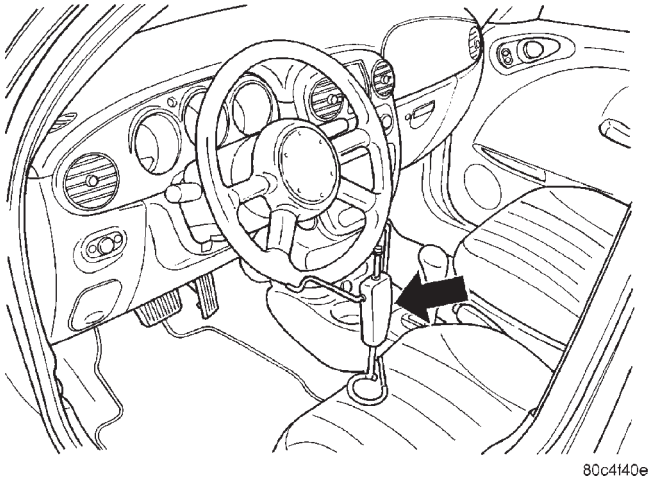

Fig. 19 Steering Wheel Holder

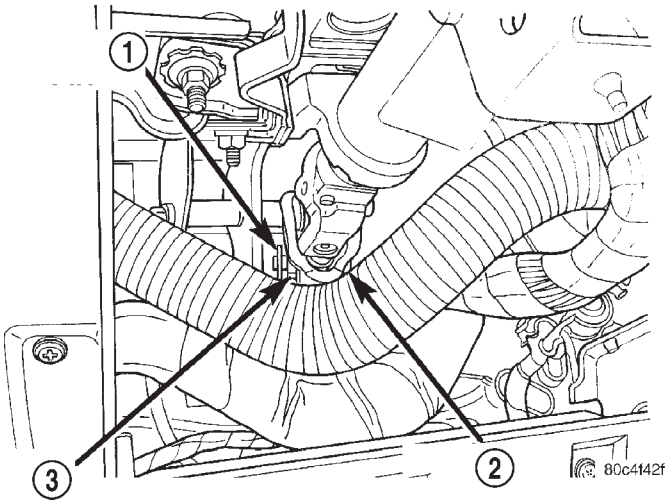

Fig. 20 Steering Column Couplings

1 – RETAINING PIN
2 – PINCH BOLT
3 – NUT

(5) Raise the vehicle. Refer to HOISTING in the LUBRICATION AND MAINTENANCE section.

(6) Release the locking tab on the wiring harness connector for the power steering fluid pressure switch, then remove the wiring harness connector from the power steering fluid pressure switch (Fig. 21).

(7) Remove the right front tire and wheel assembly.

(8) Remove the pencil strut from the right front corner of the crossmember and body of the vehicle. (Fig. 22). Remove the washer behind the strut from the torque strut bolt.

(9) Remove the screws fastening the front fascia to the reinforcement as necessary in order to access the drive-belt splash shield forward fastener screw (Fig. 23).

REMOVAL AND INSTALLATION (Continued)

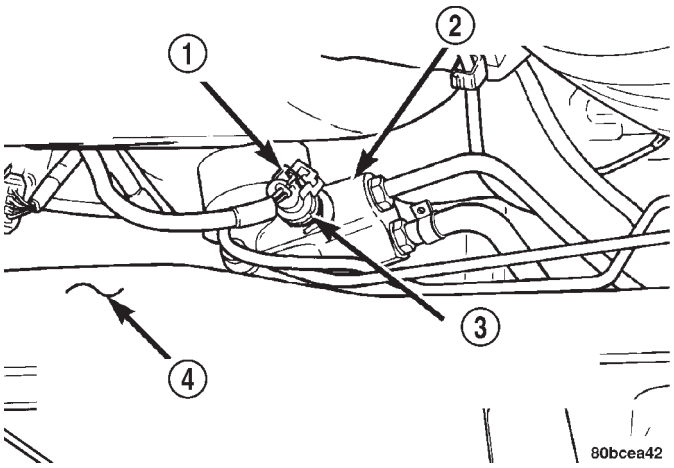

Fig. 21 Power Steering Fluid Pressure Switch

1 – WIRING HARNESS CONNECTOR
2 – POWER STEERING GEAR
3 – POWER STEERING FLUID PRESSURE SWITCH
4 – REAR OF FRONT SUSPENSION CROSSMEMBER

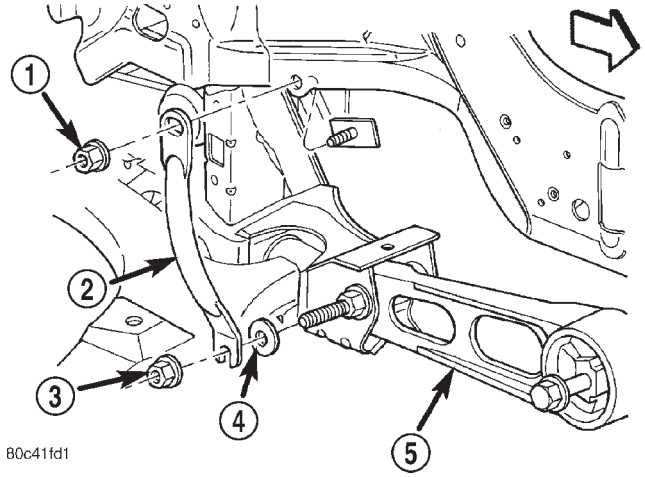

Fig. 22 Strut Mounting

1 – NUT
2 – PENCIL STRUT
3 – NUT
4 – FLAT WASHER
5 – LOWER TORQUE STRUT

(10) Remove the drive-belt splash shield fasteners (Fig. 23). Remove the shield.

(11) Remove the bolt mounting the engine torque strut to the right forward corner of the front suspension crossmember (Fig. 22).

NOTE: Before removing the front suspension crossmember from the vehicle, the location of the crossmember must be scribed on the body of the vehicle (Fig. 9). Do this so the crossmember can be relocated, upon reinstallation, against the body of vehicle in the same location as before removal. If the front suspension crossmember is not reinstalled in exactly the same location as before removal, the preset front wheel alignment settings (caster and camber) will be lost.

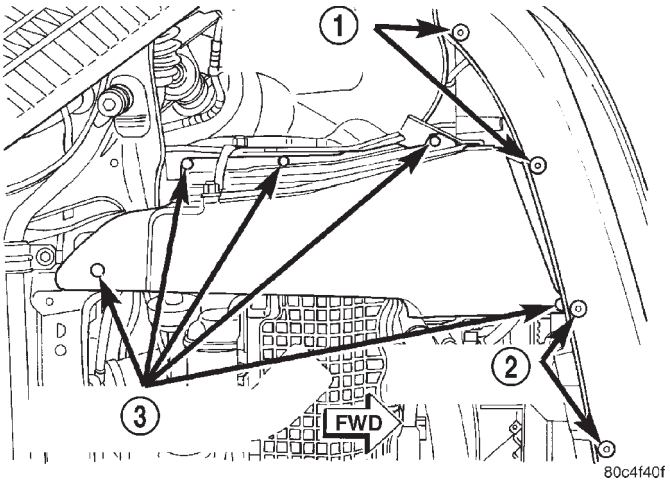

Fig. 23 Fascia And Splash Shield Fasteners

1 – FASCIA FASTENERS
2 – FASCIA FASTENERS
3 – SPLASH SHIELD FASTENERS

(12) Using an awl, scribe a line marking the location of where the front suspension crossmember is mounted against the body of the vehicle (Fig. 24).

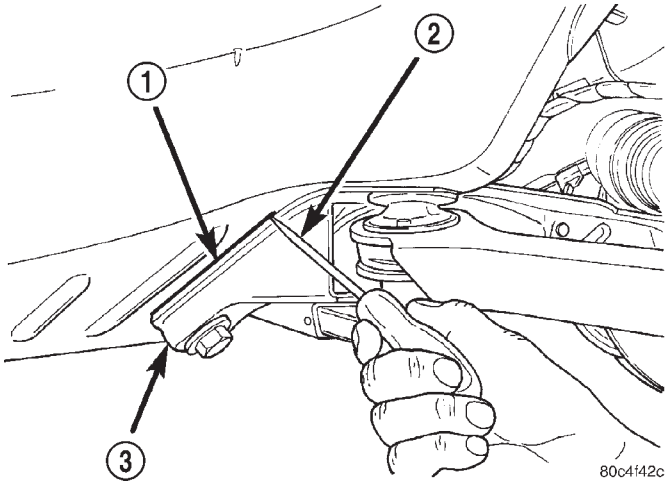

Fig. 24 Marking Crossmember Location

1 – SCRIBED LINE
2 – AWL
3 – CROSSMEMBER

(13) Position a transmission jack under the center of the front suspension crossmember and raise it to support the bottom of the crossmember.

(14) Loosen all six bolts attaching the front suspension crossmember to the frame rails of vehicle. Do not completely remove the two mounting bolts going

REMOVAL AND INSTALLATION (Continued)

through the lower control arm rear isolator bushings. They are designed to disengage from the body threads yet stay within the lower control arm rear isolator bushing. Back the two bolts out just enough to disengage the threaded tapping plates in the body of the vehicle. Completely remove the other four bolts.

CAUTION: Lower the steering gear slowly, paying special attention to the power steering fluid hoses. Do not strain or overextend the hoses because damage to the hoses or connecting hardware may occur.

(15) Lower the front suspension crossmember using the transmission jack just enough to allow access to the steering column lower coupling (Fig. 25). When lowering front suspension crossmember, do not let crossmember hang from lower control arms. The weight should be supported by the transmission jack.

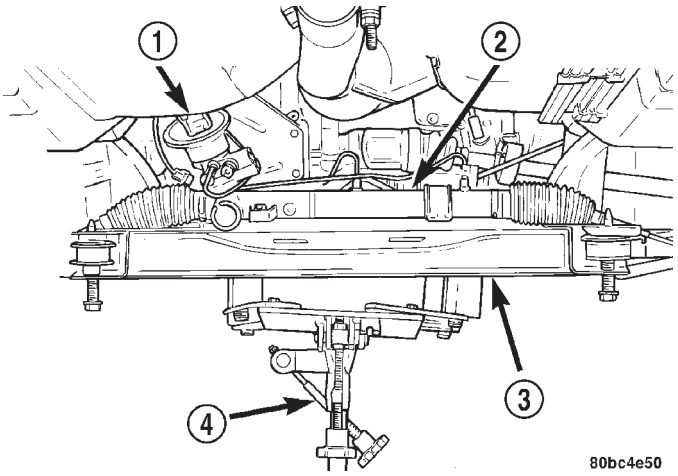

Fig. 25 Crossmember Lowered

1 – STEERING COLUMN LOWER COUPLING
2 – POWER STEERING GEAR
3 – FRONT SUSPENSION CROSSMEMBER
4 – TRANSMISSION JACK

(16) Remove the roll pin securing the steering column lower coupling to the power steering gear pinion shaft using a roll pin punch (Fig. 26). Push the steering column lower coupling up and off of the power steering gear pinion shaft.

(17) Remove the coupling from the vehicle.

INSTALLATION

(1) Push the column end of the steering column lower coupling partway up through the hole in the dash panel, then match the flat on the on the inside of the lower coupling to the flat on the power steering gear pinion shaft and slide the coupling onto the shaft.

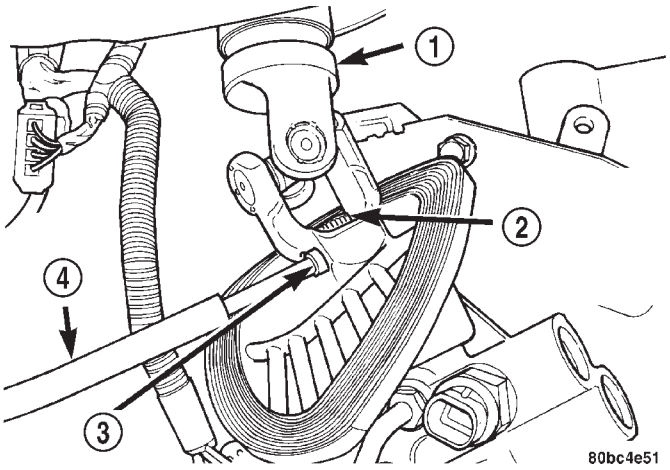

Fig. 26 Coupling Roll Pin

1 – STEERING COLUMN LOWER COUPLING
2 – POWER STEERING GEAR PINION SHAFT
3 – ROLL PIN
4 – ROLL PIN PUNCH

(2) Align the roll pin hole in the coupling to the notch in the gear pinion shaft and instal the roll pin through the coupling until it is centered (Fig. 26).

(3) Center the power steering gear rack in its travel.

(4) Using the transmission jack, raise the front suspension crossmember and power steering gear until the crossmember contacts its mounting spot against the body and frame rails of the vehicle. As the crossmember is raised, carefully guide the steering column lower coupling up through its hole in the dash panel.

(5) Start the two crossmember mounting bolts through the lower control arm rear isolator bushings into the tapping plates mounted in the body. Next, install the two front and the two rear mounting bolts attaching front suspension crossmember to frame rails of vehicle. Lightly tighten all six mounting bolts to approximately 2 N·m (20 in. lbs.) to hold the front suspension crossmember in position at this time.

NOTE: When installing the front suspension crossmember back in the vehicle, it is very important that the crossmember be attached to the body in exactly the same spot as when it was removed. Otherwise, the vehicle's wheel alignment settings (caster and camber) will be lost.

(6) Using a soft face hammer, tap the front suspension crossmember back-and-forth or side-to-side until it is aligned with the previously scribed positioning marks on the body of the vehicle (Fig. 24). Once the front suspension crossmember is correctly positioned, tighten the two crossmember mounting bolts through the lower control arm rear isolator bushings to a

REMOVAL AND INSTALLATION (Continued)

torque of 250 N·m (185 ft. lbs.), then tighten the four remaining crossmember mounting bolts to a torque of 153 N·m (113 ft. lbs.).

(7) Fasten the engine torque strut to the right forward corner of the front suspension crossmember using its mounting bolt (Fig. 22). Follow the procedure described in the ENGINE section to properly align and tighten the torque strut and it's mounting bolts.

(8) Install the washer on the end of the stud extending from the torque strut bolt (Fig. 22).

(9) Install the pencil strut to the right front corner of the crossmember and body of the vehicle (Fig. 22). Tighten the pencil strut nuts to a torque of 58 N·m (43 ft. lbs.).

(10) Install the drive-belt splash shield and fasteners (Fig. 23).

(11) Install the screws fastening the front fascia to the reinforcement (Fig. 23).

(12) Install the right front tire and wheel assembly. Tighten the mounting nuts to a torque of 135 N·m (100 ft. lbs.).

(13) Reconnect the wiring harness connector from the power steering fluid pressure switch (Fig. 21). Be sure the locking tab on the wiring harness connector is securely latched.

(14) Lower the vehicle.

(15) Install the dash-to-lower coupling seal in place over the lower coupling's plastic collar.

NOTE: Verify that grease is present on the lip of the dash-to-coupling seal where it contacts the coupling's plastic collar.

(16) Inside the passenger compartment, reconnect the steering column lower coupling to the steering column upper coupling (Fig. 20). Install the coupling pinch bolt and tighten the pinch bolt nut to a torque of 28 N·m (250 in. lbs.). Install the pinch bolt retainer pin.

(17) Remove the steering wheel holder.

(18) While looking under the instrument panel at the lower coupling, rotate the steering wheel back-and-forth to verify that the lower coupling does not squeak against the dash-to-coupling seal.

(19) Install the knee blocker.

(20) Install the silencer pad below the knee blocker panel below the steering column.

SPECIFICATIONS

STEERING COLUMN FASTENER TORQUE

DESCRIPTION	TORQUE
Steering Column:	
Mounting Nuts	17 N·m (150 in. lbs.)
SKIM Mounting Screws	3 N·m (25 in. lbs.)
Steering Column Lower Coupling:	
Pinch Bolt	28 N·m (250 in. lbs.)
Steering Wheel:	
Retaining Bolt	54 N·m (40 ft. lbs.)
Speed Control Switch Screw	2 N·m (20 in. lbs.)

STEERING

TABLE OF CONTENTS

page

POWER STEERING 1
POWER STEERING PUMP 6
STEERING GEAR. 7
STEERING COLUMN 8

POWER STEERING

TABLE OF CONTENTS

page

DESCRIPTION AND OPERATION
POWER STEERING SYSTEM - RHD 1
REMOVAL AND INSTALLATION
POWER STEERING FLUID PRESSURE HOSE - RHD 1
POWER STEERING FLUID RETURN HOSE - RHD 3
POWER STEERING FLUID COOLER - RHD. 3
POWER STEERING FLUID PRESSURE SWITCH - RHD 4
SPECIFICATIONS
POWER STEERING FASTENER TORQUE SPECIFICATIONS 5

DESCRIPTION AND OPERATION

POWER STEERING SYSTEM - RHD

The power steering system information in this section of the service manual is pertinent only to Right Hand Drive (RHD) vehicles. Since the description, operation, diagnosis and testing of components are the same as LHD vehicles. Refer to the left hand drive service manual for detailed information.

REMOVAL AND INSTALLATION

POWER STEERING FLUID PRESSURE HOSE - RHD

NOTE: Before proceeding with this removal and installation procedure, review SERVICE WARNINGS AND CAUTIONS at the beginning of the Steering Section.

REMOVAL

(1) Siphon as much fluid as possible from the power steering fluid reservoir (Fig. 1).

(2) Raise the vehicle. Refer to HOISTING in the LUBRICATION AND MAINTENANCE group in this service manual for the correct lifting procedure.

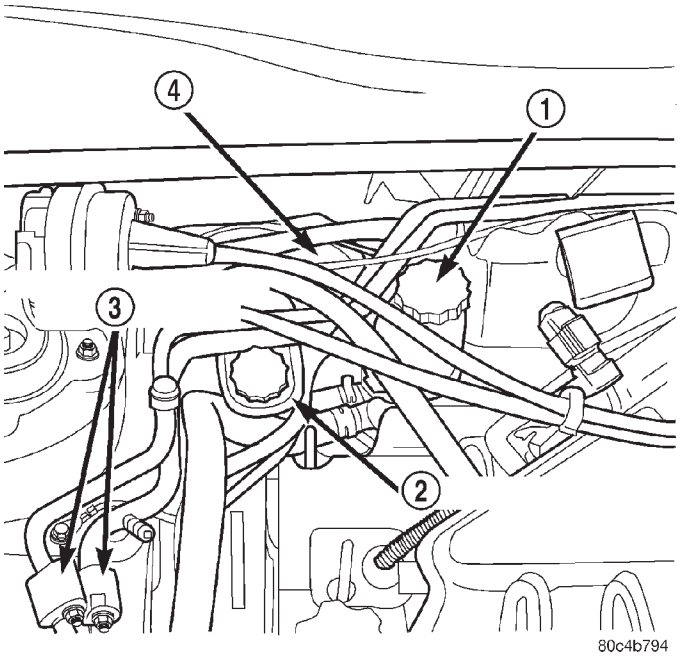

Fig. 1 RHD Reservoir Location

1 – POWER STEERING FLUID RESERVOIR
2 – MASTER CYLINDER
3 – REFRIGERANT LINE CONNECTIONS
4 – BRAKE BOOSTER

REMOVAL AND INSTALLATION (Continued)

(3) Back out the tube nut securing the power steering fluid pressure hose to the gear (Fig. 2).

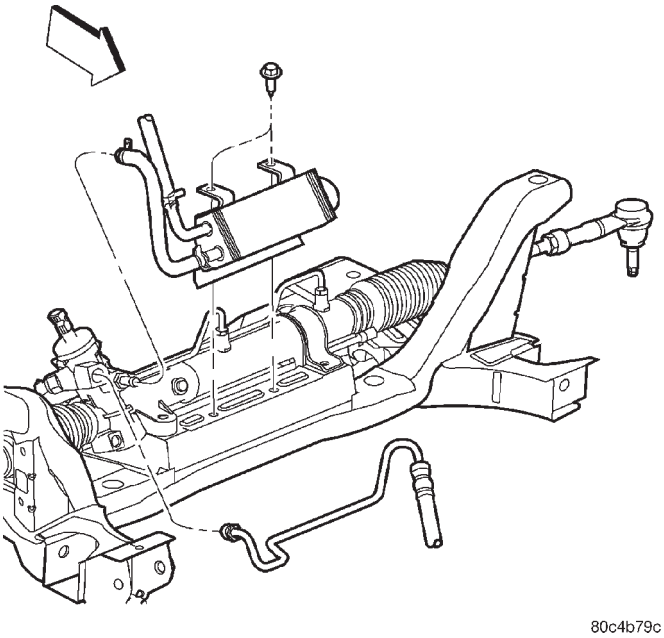

Fig. 2 Pressure Hose at Gear

(4) Open the routing clips on the left side of the power steering gear and remove the power steering fluid pressure hose tube from the routing clips. At the same time, remove the pressure hose tube from the gear.

(5) Remove the right front wheel and tire assembly.

(6) Remove the right front wheel well splash shield from the vehicle. Refer to Body for detailed instructions.

(7) Disconnect the high pressure refrigerant switch from the rear of the A/C compressor. Depress locking tab and pull straight out.

(8) Remove the compressor drive belt from the engine assembly. Refer to the Cooling section of the service manual.

(9) Remove the A/C compressor mounting bolts and position the compressor rearward, so pulley rests on its mounting bracket. This will allow sufficient room to access the power steering fluid pressure line at the pump.

(10) Back out the tube nut securing the power steering fluid pressure hose to the power steering pump and remove the hose from the pump.

(11) Remove the bolt securing the hose routing clip to the side of the engine block.

(12) Remove the power steering pressure hose from the engine. Feed the gear side of the hose through the engine block mounted coupler and remove the hose from the vehicle.

INSTALLATION

(1) Install the power steering pressure hose in the opposite manner as removed.

(2) Using a lint free towel, wipe clean the open power steering hose end and the power steering pump port. Replace the used O-ring with new. Lubricate the O-ring with power steering fluid.

(3) Attach the power steering fluid pressure hose to the outlet fitting on the bottom of the power steering pump. Tighten the pressure hose tube nut to a torque of 34 N·m (25 ft. lbs.).

(4) Install the power steering fluid pressure hose routing clip. Tighten the hose routing clip bolt to a torque of 12 N·m (105 in. lbs.).

(5) Install the A/C compressor and mounting bolts. Torque bolts to 34 N·m (25 ft. lbs.).

(6) Connect the high pressure refrigerant switch on the rear of the A/C compressor.

(7) Install the right front wheel well splash shield on the vehicle. Refer to Body for detailed instructions.

(8) Install the right front wheel and tire assembly.

CAUTION: The power steering fluid hoses must remain away from the exhaust system, vehicle components, and unfriendly surfaces that can cause possible damage to the power steering hoses.

(9) Using a lint free towel, wipe clean the open power steering hose end and the power steering gear port. Replace the used O-ring with new. Lubricate the O-ring with power steering fluid.

(10) Attach the power steering fluid pressure hose to the port on the power steering gear. Start the tube nut threads into the gear, but do not tighten it at this time.

(11) Open the routing clips on the right side of the power steering gear and install the power steering fluid pressure hose into the routing clips. Close the clips.

(12) Tighten the pressure hose tube nut at the gear to a torque of 34 N·m (25 ft. lbs.).

(13) Lower the vehicle from the hoist.

(14) Perform the POWER STEERING PUMP INITIAL OPERATION service procedure which can be found in the POWER STEERING PUMP section of this group to properly fill and bleed the power steering system.

(15) Check for leaks at all hose connections.

REMOVAL AND INSTALLATION (Continued)

POWER STEERING FLUID RETURN HOSE - RHD

NOTE: Before proceeding with this removal and installation procedure, review SERVICE WARNINGS AND CAUTIONS at the beginning of the Steering Section.

REMOVAL

(1) Siphon as much fluid as possible from the power steering fluid reservoir.

(2) Raise the vehicle. Refer to HOISTING in the LUBRICATION AND MAINTENANCE group in this service manual for the correct lifting procedure.

(3) If the vehicle is equipped with a power steering fluid cooler, remove the hose clamp securing the return hose to the cooler. Slide the hose off the end of the cooler tube.

(4) If the vehicle is not equipped with a power steering fluid cooler:

- Remove the hose clamp securing the return hose to the steel fitting in the outlet port on the power steering gear.
- Slide the hose off the end of the steel fitting.

(5) Lower the vehicle.

(6) Remove the hose clamp securing the return hose to the power steering fluid reservoir (Fig. 3). Slide the hose off the end of the reservoir fitting.

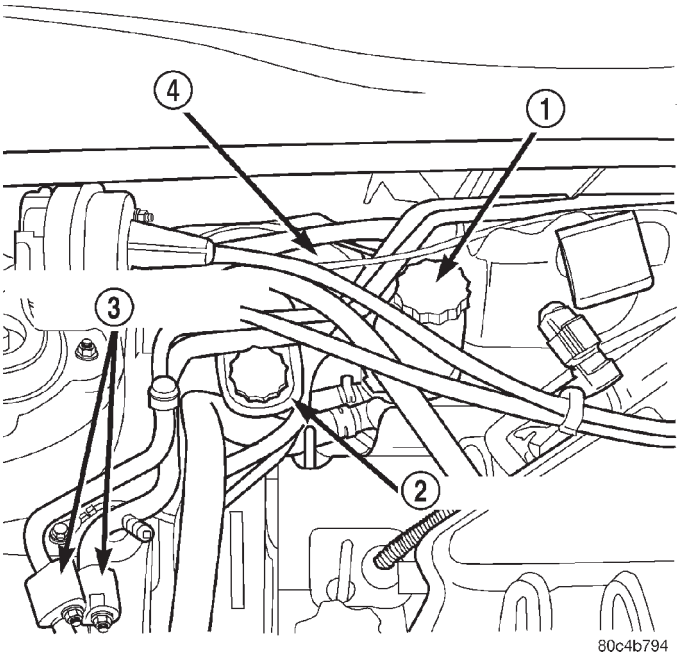

Fig. 3 RHD Reservoir Location

1 – POWER STEERING FLUID RESERVOIR
2 – MASTER CYLINDER
3 – REFRIGERANT LINE CONNECTIONS
4 – BRAKE BOOSTER

(7) Remove the power steering return hose from the engine compartment.

INSTALLATION

(1) Slide a hose clamp onto the power steering pump end of the hose far enough to clear the fitting on the power steering fluid reservoir once the hose is installed.

(2) Install the power steering return hose into the engine compartment from the top. First, guide the pump end of the hose onto the fitting on the power steering fluid reservoir, then route the rest of the hose along the right side of the engine. Guide the gear end of the hose down behind the back of the engine towards the power steering gear.

(3) Expand the hose clamp and slide it onto the fluid reservoir fitting. Secure the clamp once it is past the bead formed into the fluid reservoir fitting.

(4) Raise the vehicle.

CAUTION: The power steering fluid hoses must remain away from the exhaust system, vehicle components, and unfriendly surfaces that can cause possible damage to the power steering hoses.

(5) Using a lint free towel, wipe clean the open power steering hose end and the power steering gear port fitting or power steering fluid cooler port.

(6) Install a hose clamp onto the end of the hose far enough to clear the fitting on the steering gear or cooler once the hose is installed.

(7) If the vehicle is equipped with a power steering fluid cooler, slide the hose onto the end of the cooler tube. Install the hose clamp past the bead formed into the cooler tube and secure in place.

(8) If the vehicle is not equipped with a power steering fluid cooler:

- Slide the hose onto the end of the steel fitting in the steering gear outlet port.
- Install the hose clamp past the bead formed into the steel fitting and secure in place.

(9) Lower the vehicle.

(10) Perform the POWER STEERING PUMP INITIAL OPERATION service procedure which can be found in the POWER STEERING PUMP section of this group to properly fill and bleed the power steering system.

(11) Check for leaks at all hose connections.

POWER STEERING FLUID COOLER - RHD

NOTE: Before proceeding with this removal and installation procedure, review SERVICE WARNINGS AND CAUTIONS at the beginning of the Steering Section.

REMOVAL AND INSTALLATION (Continued)

REMOVAL

(1) Siphon as much fluid as possible from the power steering fluid reservoir (Fig. 4).

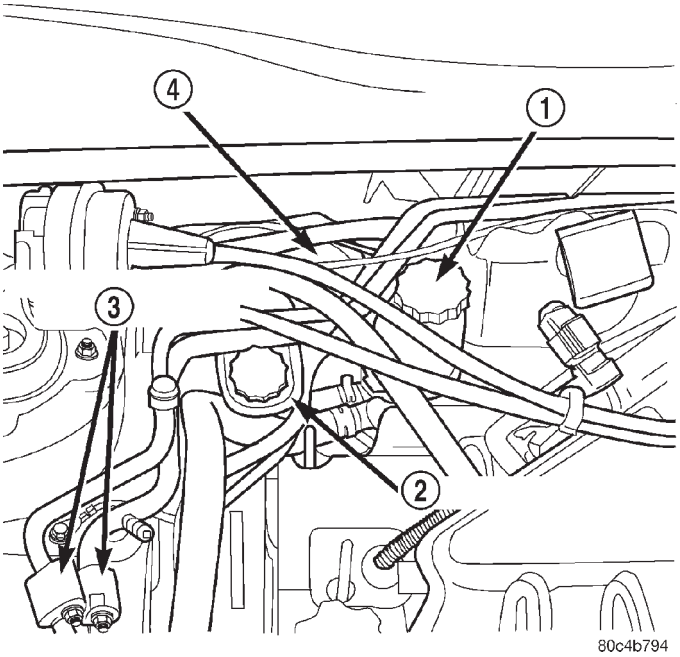

Fig. 4 RHD Power Steering Fluid Reservoir Location

1 – POWER STEERING FLUID RESERVOIR
2 – MASTER CYLINDER
3 – REFRIGERANT LINE CONNECTIONS
4 – BRAKE BOOSTER

(2) Raise the vehicle. Refer to HOISTING in the LUBRICATION AND MAINTENANCE group in this service manual for the correct lifting procedure.

(3) Remove the hose clamps, attaching the power steering fluid hoses to the power steering fluid cooler (Fig. 5). Remove the hoses from the cooler.

(4) Remove the two screws securing the cooler to the front suspension crossmember. They are located behind the cooler.

(5) Remove the cooler from the vehicle.

INSTALLATION

(1) Slide the hose clamps onto the ends of the power steering cooler fluid hoses.

(2) Slide the hoses onto the fittings on the power steering fluid cooler.

(3) Install the hose clamps on the power steering cooler hoses past the bead formed into the steel fitting and secure in place.

(4) Install the two screws attaching the cooler to the front suspension crossmember. Tighten the cooler attaching screws to a torque of 10 N·m (90 in. lbs.).

(5) Lower the vehicle.

(6) Perform the POWER STEERING PUMP INITIAL OPERATION service procedure which can be

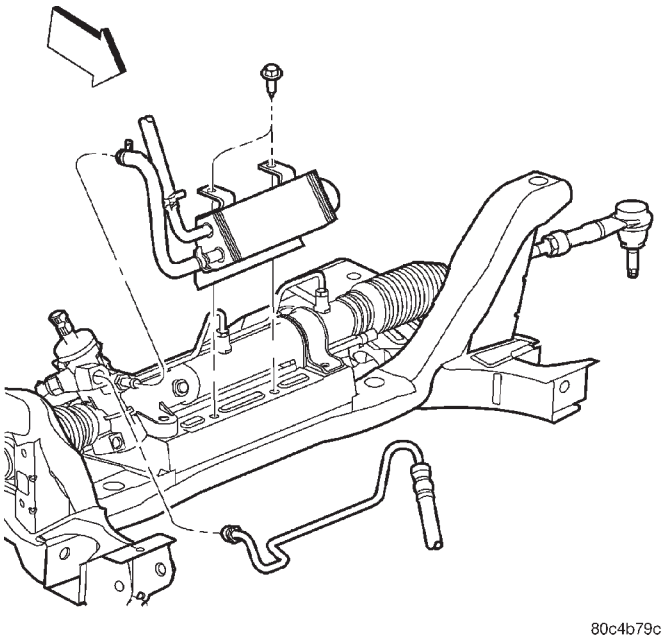

Fig. 5 RHD Power Steering Fluid Cooler

found in the POWER STEERING PUMP section of this group to properly fill and bleed the power steering system.

(7) Check for leaks at all connections.

POWER STEERING FLUID PRESSURE SWITCH - RHD

NOTE: Before proceeding with this removal and installation procedure, review SERVICE WARNINGS AND CAUTIONS at the beginning of REMOVAL AND INSTALLATION in this section.

REMOVAL

(1) Remove the air filter housing from the engine compartment. This will allow access to the negative battery cable.

(2) Disconnect negative battery cable from the negative post of the battery. Be sure cable is isolated from negative post on battery.

(3) Raise the vehicle. Refer to HOISTING in the LUBRICATION AND MAINTENANCE group in this service manual for the correct lifting procedure.

(4) Locate the power steering fluid pressure switch on the back side of the power steering gear (Fig. 6).

(5) Remove the vehicle wiring harness connector from the power steering fluid pressure switch.

(6) Unscrew and remove the power steering fluid pressure switch from the power steering gear.

INSTALLATION

(1) By hand, screw the power steering pressure switch into the power steering gear until it is fully

REMOVAL AND INSTALLATION (Continued)

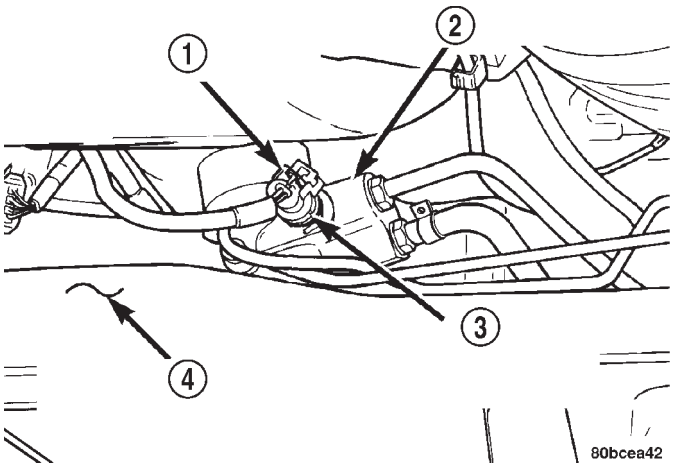

Fig. 6 Switch Location (LHD Shown) RHD Symmetrically Opposite

1 – WIRING HARNESS CONNECTOR
2 – POWER STEERING GEAR
3 – POWER STEERING FLUID PRESSURE SWITCH
4 – REAR OF FRONT SUSPENSION CROSSMEMBER

seated (Fig. 6). Tighten the power steering pressure switch to a maximum torque of 8 N·m (70 in. lbs.). Over-torquing will result in stripping the threads out of the power steering pressure switch port in the steering gear.

(2) Install the vehicle wiring harness connector. Be sure the latch on the wiring harness connector is fully engaged with the locking tab on the power steering pressure switch.

(3) Lower the vehicle.

(4) Fill the power steering fluid reservoir to the correct fluid level. Use only Mopar® Power Steering Fluid, or equivalent.

(5) Connect the negative cable to the negative post of the battery.

(6) Reinstall the air filter housing.

(7) Start the engine and turn the steering wheel several times stop-to-stop to bleed any air from the fluid in the power steering system. Stop the engine, check the fluid level, and inspect the system for leaks.

SPECIFICATIONS

POWER STEERING FASTENER TORQUE SPECIFICATIONS

DESCRIPTION	TORQUE
POWER STEERING HOSE:	
Tube Nuts	34 N·m (25 ft. lbs.)
Hose Routing Clip Bolt	12 N·m (105 in. lbs.)
POWER STEERING COOLER:	
Mounting Screws	10 N·m (90 in. lbs.)
POWER STEERING FLUID PRESSURE SWITCH:	
Switch	8 N·m (70 in. lbs.)
POWER STEERING PUMP:	
Pressure Hose Tube Nut	34 N·m (25 ft. lbs.)
Pressure Fitting	88 N·m (65 ft. lbs.)
Front Mounting Bolts	28 N·m (250 in. lbs.)
Rear Mounting Bolt	28 N·m (250 in. lbs.)
Rear Support Bracket To Engine Bolts	54 N·m (40 ft. lbs.)

POWER STEERING PUMP

TABLE OF CONTENTS

page

SERVICE PROCEDURES
POWER STEERING PUMP INITIAL OPERATION 6

page

REMOVAL AND INSTALLATION
POWER STEERING PUMP - RHD 6

SERVICE PROCEDURES

POWER STEERING PUMP INITIAL OPERATION

CAUTION: The fluid level should be checked with engine off to prevent injury from moving components. Use only Mopar® Power Steering Fluid. Do not use automatic transmission fluid. Do not overfill.

Wipe the filler cap clean, then check the fluid level. The dipstick should indicate **COLD** when the fluid is at normal temperature, approximately 21°C to 27°C (70°F to 80°F).

(1) Fill the power steering fluid reservoir to the proper level and let the fluid settle for at least two minutes.

(2) Start the engine and let run for a few seconds, then turn the engine off.

(3) Add fluid if necessary. Repeat the above procedure until the fluid level remains constant after running the engine.

(4) Raise the front wheels off the ground.

(5) Start the engine. Slowly turn the steering wheel right and left, lightly contacting the wheel stops.

(6) Add power steering fluid if necessary.

(7) Lower the vehicle and turn the steering wheel slowly from lock to lock.

(8) Stop the engine. Check the fluid level and refill as required.

(9) If the fluid is extremely foamy, allow the vehicle to stand a few minutes and repeat the above procedure.

REMOVAL AND INSTALLATION

POWER STEERING PUMP - RHD

The RHD PT vehicle utilizes a identical power steering pump and mounting location as LHD PT. Refer to the LHD power steering pump removal and installation procedure for detailed instructions.

STEERING GEAR

TABLE OF CONTENTS

page

REMOVAL AND INSTALLATION
POWER STEERING GEAR - RHD 7

REMOVAL AND INSTALLATION

POWER STEERING GEAR - RHD

The RHD PT vehicle utilizes a identical / symmetrically opposite power steering gear and mounting location as LHD PT. Refer to the LHD power steering gear removal and installation procedure for detailed instructions.

STEERING COLUMN

TABLE OF CONTENTS

page

REMOVAL AND INSTALLATION
STEERING COLUMN - RHD. 8

REMOVAL AND INSTALLATION

STEERING COLUMN - RHD

The RHD PT utilizes identical / symmetrically opposite instrument panel and components as LHD. Refer to the LHD steering column removal and installation procedure for detailed instructions.

TRANSAXLE

TABLE OF CONTENTS

page

NV T350 (A-578) MANUAL TRANSAXLE 1

41TE TRANSAXLE. 55

NV T350 (A-578) MANUAL TRANSAXLE

TABLE OF CONTENTS

page

DESCRIPTION AND OPERATION
NV T350 MANUAL TRANSAXLE. 1
DIAGNOSIS AND TESTING
COMMON PROBLEM CAUSES 3
HARD SHIFTING 3
NOISY OPERATION. 3
SLIPS OUT OF GEAR 3
LOW LUBRICANT LEVEL. 3
CLUTCH PROBLEMS. 3
SERVICE PROCEDURES
FLUID DRAIN AND FILL. 3
REMOVAL AND INSTALLATION
GEARSHIFT KNOB 4
GEARSHIFT BOOT 4
GEARSHIFT CABLE ASSEMBLY 5
GEARSHIFT MECHANISM REPLACEMENT 9
VEHICLE SPEED SENSOR AND DRIVE PINION 11
BACK-UP LAMP SWITCH. 12
CROSSOVER LEVER. 12
SELECTOR LEVER 12
AXLE SHAFT SEALS 12
SHIFT SHAFT SEALS. 13
TRANSAXLE 14
DISASSEMBLY AND ASSEMBLY
TRANSAXLE 19
INPUT SHAFT 32
OUTPUT SHAFT 37
DIFFERENTIAL 37
SYNCHRONIZER 42
SHIFT RAILS OVERHAUL 43
TRANSAXLE CASE OVERHAUL. 43
CLEANING AND INSPECTION
TRANSAXLE 49
SYNCHRONIZER 49
ADJUSTMENTS
GEARSHIFT CROSSOVER CABLE ADJUSTMENT. 50
BEARING ADJUSTMENT PROCEDURE 50
DIFFERENTIAL BEARING PRELOAD ADJUSTMENT. 50
SPECIFICATIONS
NV T350 (A-578) 51
SPECIAL TOOLS
NV T350 (A-578) MANUAL TRANSAXLE. 52

DESCRIPTION AND OPERATION

NV T350 MANUAL TRANSAXLE

DESCRIPTION

This five speed is a constant-mesh manual transaxle. All gear ranges, except reverse, are synchronized. The reverse gear utilizes a brake and blocking ring for shifting ease. The reverse idler gear is supported on a sliding spindle idler shaft. The transaxle case is aluminum with a steel end–plate bearing cover. It is housed in a die-cast aluminum case featuring a two–piece, middle split design (Fig. 1).

The NV T350 (A-578) transaxle internal components can be serviced only by separating the gear case from the bellhousing case.

CAUTION: The transaxle output shaft is serviced as a unit. No disassembly and reassembly is possible. Damage to the transaxle may result.

DESCRIPTION AND OPERATION (Continued)

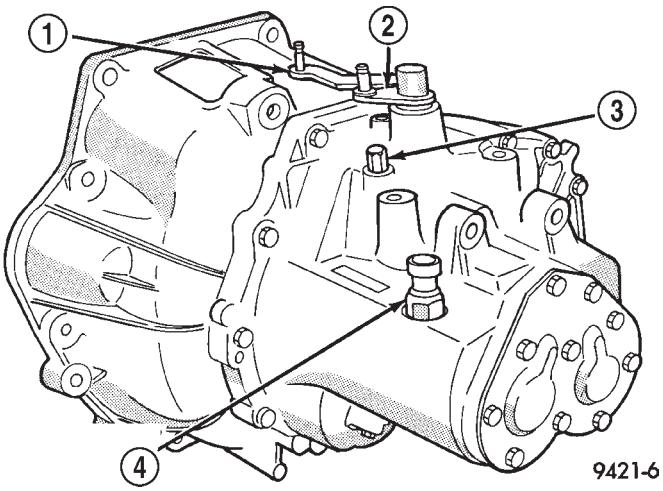

Fig. 1 NV T350 (A578) Manual Transaxle

1 – SHIFT LEVER
2 – CROSSOVER LEVER
3 – VENT
4 – REVERSE LAMP SWITCH

TRANSAXLE IDENTIFICATION

The transaxle model, assembly number, and build date are on a metal I.D. tag that is attached to the end cover of the transaxle (Fig. 2). This information is also shown on a bar code label that is attached to the front of the transaxle (Fig. 3).

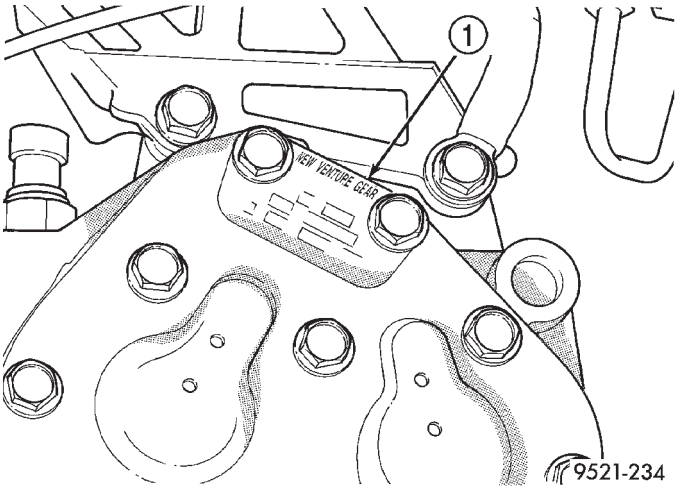

Fig. 2 Metal I.D. Tag

1 – METAL I.D. TAG

NOTE: Transaxles use various final drive gear ratios in different vehicle applications. Therefore, it is necessary that the correct transaxle assembly number is used when ordering service parts.

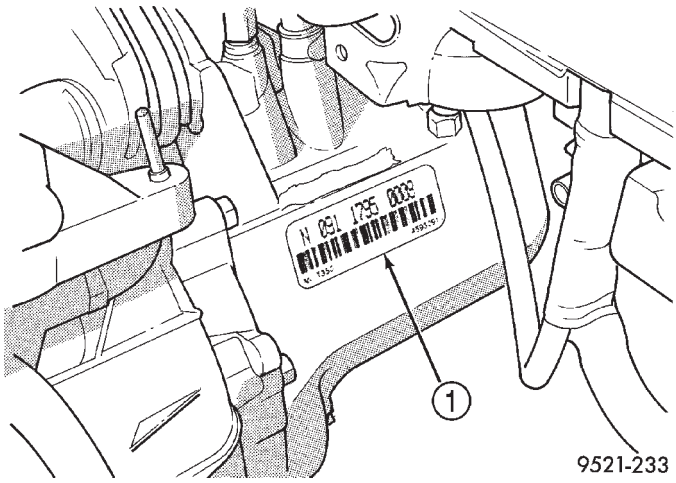

Fig. 3 Bar Code Label

1 – BAR CODE LABEL

GEAR RATIOS

CAUTION: All gears and shafts must not be interchanged with other transaxles; they will not function correctly.

The differential is a conventional arrangement of gears that is supported by tapered roller bearings. The final output gear turns the ring gear and differential assembly, thereby turning the drive axle shafts.

The gear ratios of each transaxle are shown in the following chart. The chart also shows which transaxles are available with the reverse–input shaft brake. This brake allows easier shifting into reverse and helps eliminate reverse gear clash.

GEAR	
1st	3.50
2nd	1.95
3rd	1.36
4th	0.97
5th	0.81
FINAL DRIVE RATIO	3.94
REVERSE BRAKE	YES
CLUTCH RELEASE SYSTEM	HYDRAULIC

GEARSHIFT PATTERN

The NV T350 (A-578) transaxle shift pattern is a modified H–pattern (Fig. 4). Overdrive fifth and reverse gears are in–line and outboard of the first through fourth gear positions.

DESCRIPTION AND OPERATION (Continued)

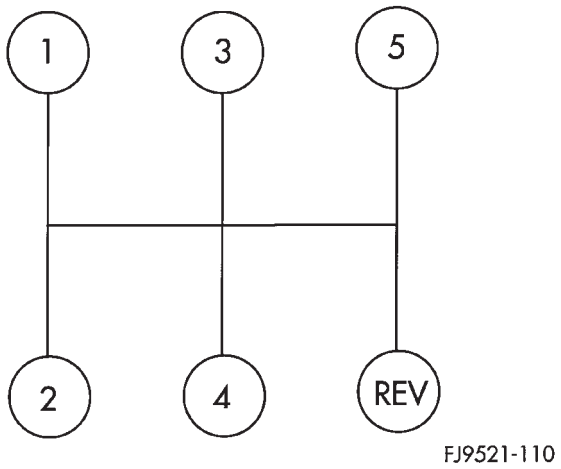

Fig. 4 NV T350 (A-578) Shift Pattern

LUBRICANT/ADDITIVES

NV T350 (A-578) transaxles use Mopar® Type M.S. 9417 Manual Transaxle Fluid. **Hypoid gear lube, engine oil, and/or automatic transmission fluid should not be used in this transaxle.** Hard shifting effort, bearing, gear, and/or synchronizer failure may occur if incorrect fluid is used.

The addition of any fluids to the transaxle, other than the fluid listed above, is not recommended. An exception to this policy is the use of special dyes to aid in detecting fluid leaks. The use of transmission sealers should be avoided, since they may adversely affect seals.

SEALANTS

The sealant used to seal the transaxle case halves and input bearing is Mopar® Gasket Maker, Loctite® 518, or equivalent. The sealant used for the bearing end plate cover is Mopar® RTV.

DIAGNOSIS AND TESTING

COMMON PROBLEM CAUSES

The majority of transaxle malfunctions are a result of:

- Insufficient lubrication
- Incorrect lubricant
- Misassembled or damaged internal components
- Improper operation

HARD SHIFTING

Hard shifting may be caused by a misadjusted crossover cable. If hard shifting is accompanied by gear clash, synchronizer clutch and stop rings or gear teeth may be worn or damaged.

Misassembled synchronizer components also cause shifting problems. Incorrectly installed synchronizer sleeves, struts, or springs can cause shift problems.

NOISY OPERATION

Transaxle noise is most often a result of worn or damaged components. Chipped, broken gear or synchronizer teeth, and brinnelled, spalled bearings all cause noise.

Abnormal wear and damage to the internal components is frequently the end result of insufficient lubricant.

SLIPS OUT OF GEAR

Transaxle disengagement may be caused by misaligned or damaged shift components, or worn teeth on the drive gears or synchronizer components. Incorrect assembly also causes gear disengagement.

LOW LUBRICANT LEVEL

Insufficient transaxle lubricant is usually the result of leaks, or inaccurate fluid level check or refill method. Leakage is evident by the presence of oil around the leak point. If leakage is not evident, the condition is probably the result of an underfill.

If air–powered lubrication equipment is used to fill a transaxle, be sure the equipment is properly calibrated. Equipment out of calibration can lead to an underfill condition.

CLUTCH PROBLEMS

Worn, damaged, or misaligned clutch components can cause difficult shifting, gear clash, and noise.

A worn or damaged clutch disc, pressure plate, or release bearing can cause hard shifting and gear clash.

SERVICE PROCEDURES

FLUID DRAIN AND FILL

All NV T350 (A-578) transaxles are equipped with a fill plug. The fill plug is located on the left side of the transaxle differential area (Fig. 5). The fluid level should be within 3/16 inch from the bottom of the transaxle fill hole (vehicle must be level when checking).

All NV T350 (A-578) transaxles are equipped with a drain plug. The drain plug is located on the lower right side of the transaxle differential housing (Fig. 6). Tighten drain plug to 28 N·m (250 in. lbs.)

Fill transaxle to capacity. Refer to following chart. Wipe the outside of the transaxle if any lubricant spills.

SERVICE PROCEDURES (Continued)

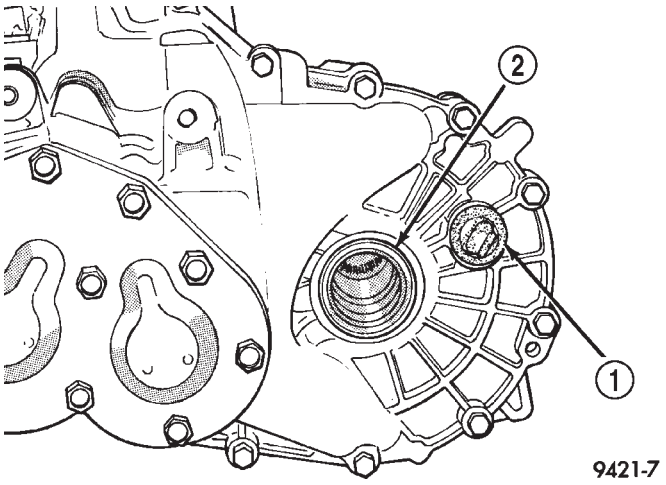

Fig. 5 Fill Plug Location

1 – RUBBER FILL PLUG
2 – LEFT DRIVESHAFT SEAL

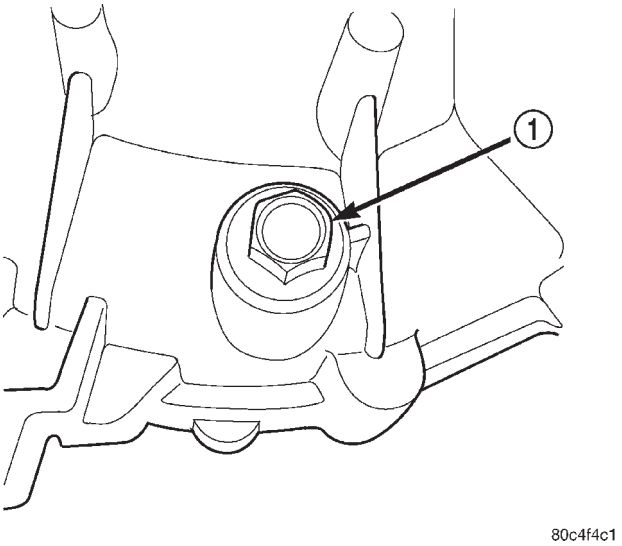

Fig. 6 Drain Plug Location

1 – DRAIN PLUG

NV T350 (A-578) MANUAL TRANSAXLE FLUID FILL

TRANSAXLE	METRIC MEASURE	U.S. MEASURE
NV T350	2.4-2.7 Liters	2.5-2.8 Quarts

REMOVAL AND INSTALLATION

GEARSHIFT KNOB

REMOVAL

(1) Pull up on gearshift knob with moderate force to remove from gearshift mechanism (Fig. 7).

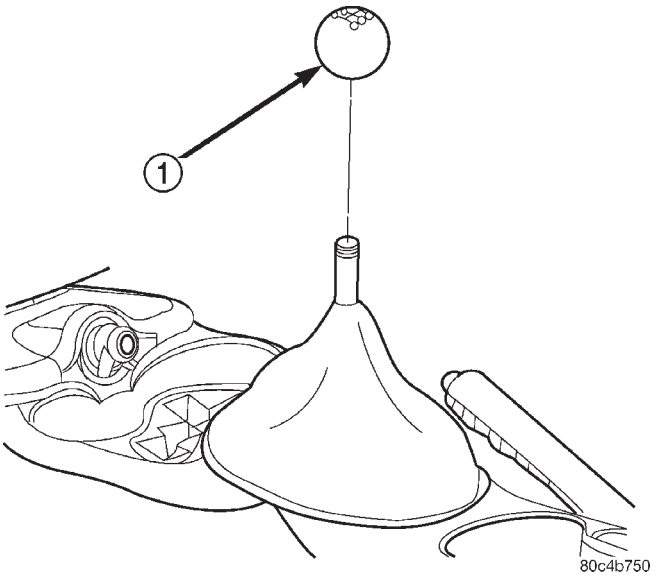

Fig. 7 Gearshift Knob Removal/Installation

1 – GEARSHIFT KNOB

INSTALLATION

(1) Position knob hole over the gearshift mechanism and align the shift pattern.

(2) Strike knob with rubber mallet to engage knob to mechanism.

(3) Verify that shift pattern is aligned properly.

GEARSHIFT BOOT

REMOVAL

(1) Pull up on gearshift knob with moderate force to remove from gearshift mechanism (Fig. 8).

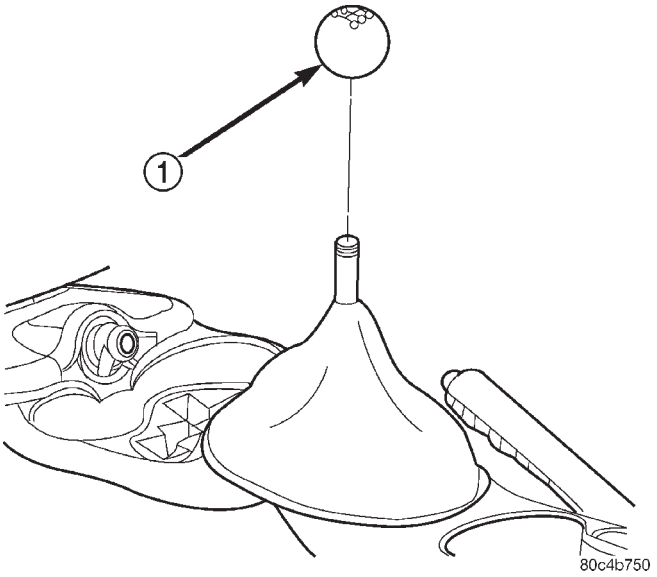

Fig. 8 Gearshift Knob Removal/Installation

1 – GEARSHIFT KNOB

REMOVAL AND INSTALLATION (Continued)

(2) Remove shifter boot/bezel assembly from console by lifting up at mounting ring area (Fig. 9).

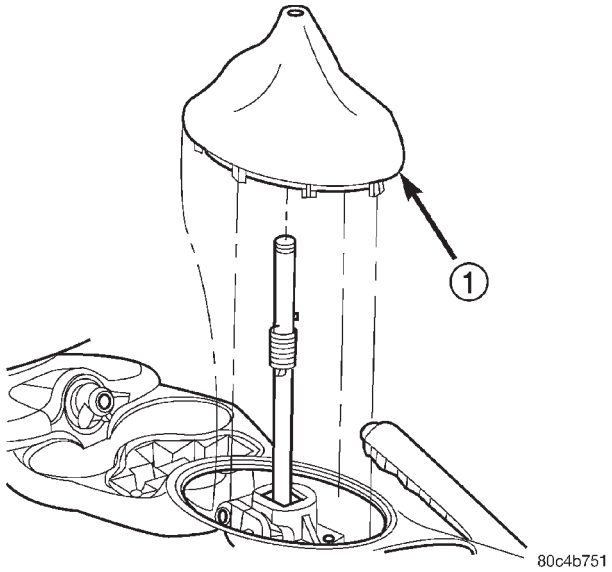

Fig. 9 Gearshift Boot Removal/Installation

1 – GEARSHIFT BOOT

INSTALLATION

(1) Position gearshift boot (Fig. 9) over the gearshift mechanism and engage tab on mount ring at front to opening in console. Apply hand pressure to engage bosses on mount ring of boot to console opening slots.

(2) Position gearshift knob hole over the gearshift mechanism (Fig. 8) and align the shift pattern.

(3) Strike knob with rubber mallet to engage knob to mechanism.

(4) Verify that shift pattern is aligned properly.

GEARSHIFT CABLE ASSEMBLY

NOTE: The crossover and selector cables are manufactured as a cable "assembly" and cannot be serviced individually.

REMOVAL

(1) Pull up on gearshift knob with moderate force to remove from gearshift mechanism (Fig. 10).

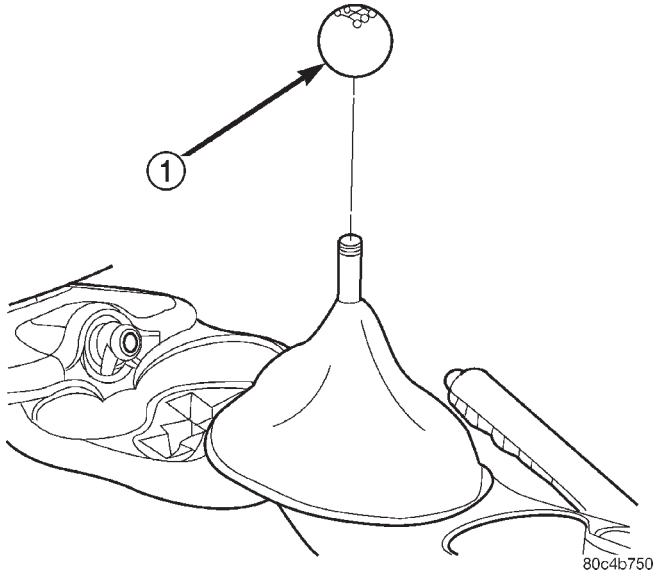

Fig. 10 Gearshift Knob Removal/Installation

1 – GEARSHIFT KNOB

(2) Remove shifter boot/bezel assembly from console by lifting up at mounting ring area (Fig. 11).

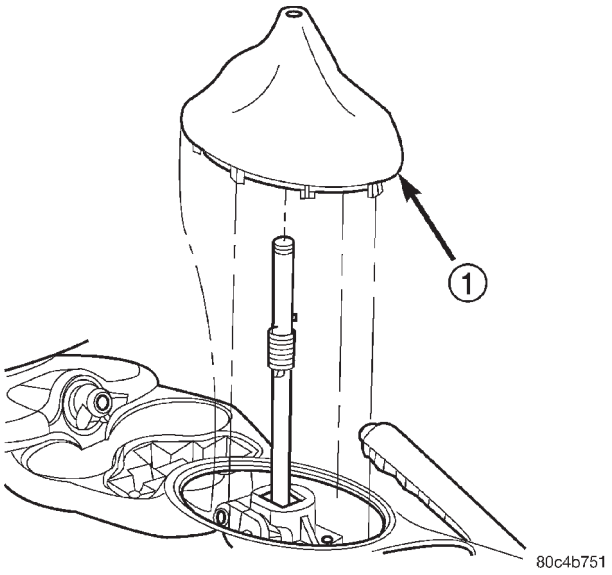

Fig. 11 Gearshift Boot Removal/Installation

1 – GEARSHIFT BOOT

REMOVAL AND INSTALLATION (Continued)

(3) Remove the center console assembly as shown in (Fig. 12).

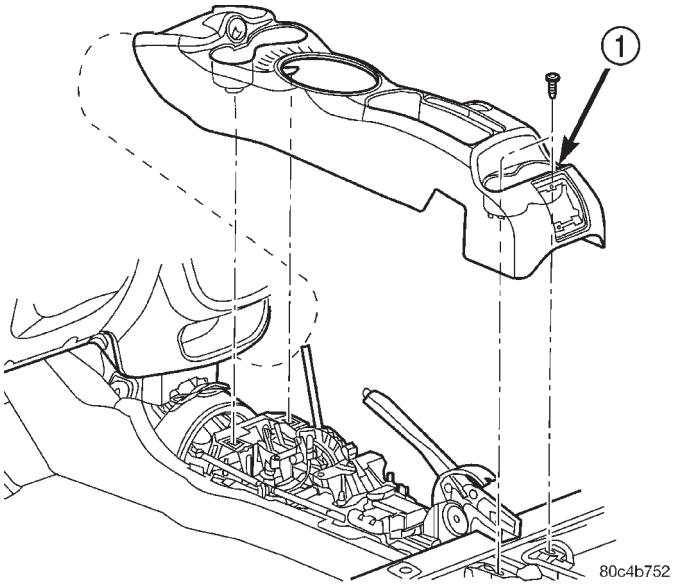

Fig. 12 Center Console Removal/Installation—Typical

1 – CENTER CONSOLE

(4) Remove crossover cable retaining clip and disconnect from shift lever (Fig. 13).

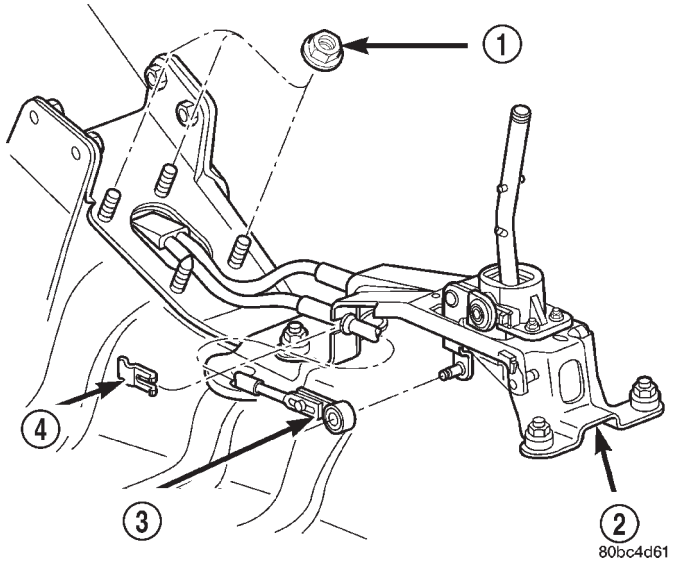

Fig. 13 Crossover Cable at Shifter Assembly

1 – GROMMET PLATE NUT
2 – SHIFTER
3 – CROSSOVER CABLE
4 – CLIP

(5) Remove selector cable retaining clip and disconnect from shift lever (Fig. 14).

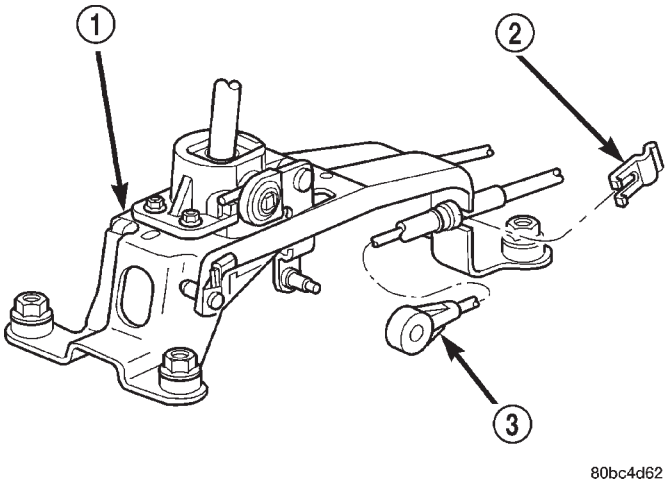

Fig. 14 Selector Cable at Shifter Assembly

1 – SHIFTER
2 – CLIP
3 – SELECTOR CABLE

(6) Remove three grommet plate-to-floor pan attaching nuts (Fig. 13).

(7) Remove air cleaner assy (Fig. 15).

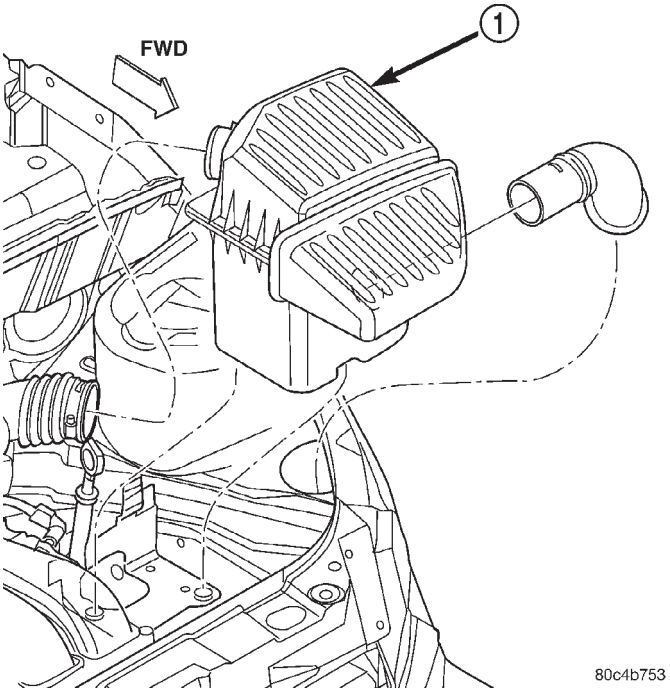

Fig. 15 Air Cleaner Assembly Removal/Installation

1 – AIR CLEANER ASSEMBLY

REMOVAL AND INSTALLATION (Continued)

(8) Disconnect battery cables.

(9) Remove battery hold-down clamp and battery (Fig. 16).

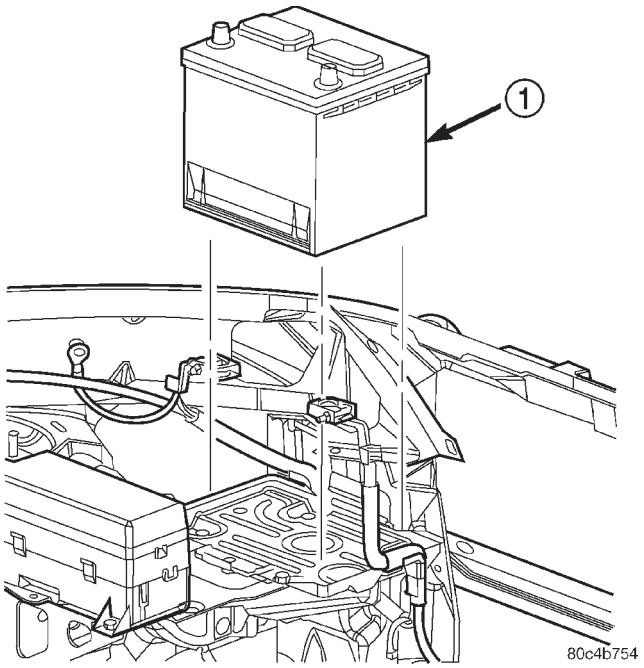

Fig. 16 Battery Removal/Installation

1 – BATTERY

(10) Remove battery tray (Fig. 17).

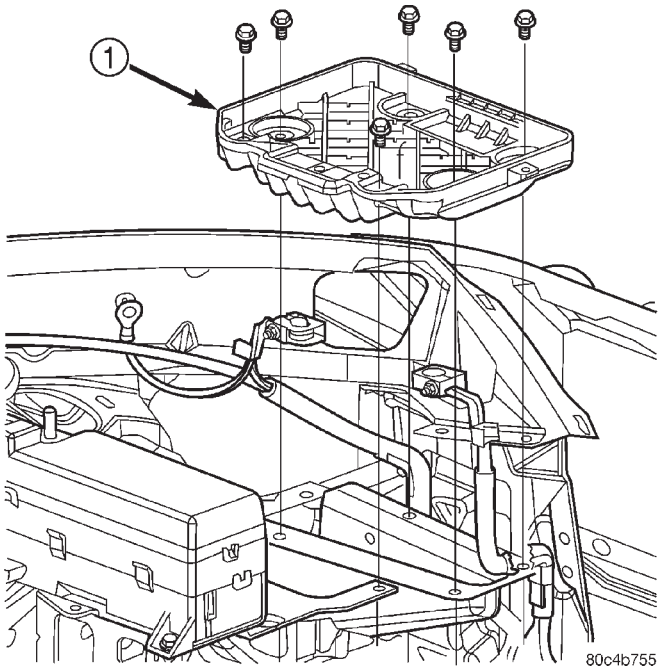

Fig. 17 Battery Tray Removal/Installation

1 – BATTERY TRAY

(11) Disconnect cables from the shift levers at the transaxle (Fig. 18).

CAUTION: Pry up with equal force on both sides of shifter cable isolator bushings to avoid damaging cable isolator bushings.

(12) Remove cable retaining clips and remove cables from bracket (Fig. 18).

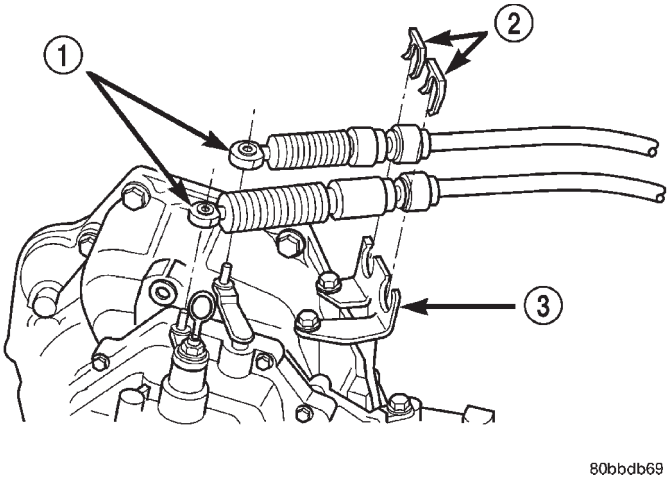

Fig. 18 Shift Cables at Transaxle

1 – SHIFT CABLES
2 – CLIPS
3 – BRACKET

(13) Raise vehicle on hoist.

(14) Remove converter heat shield (Fig. 19).

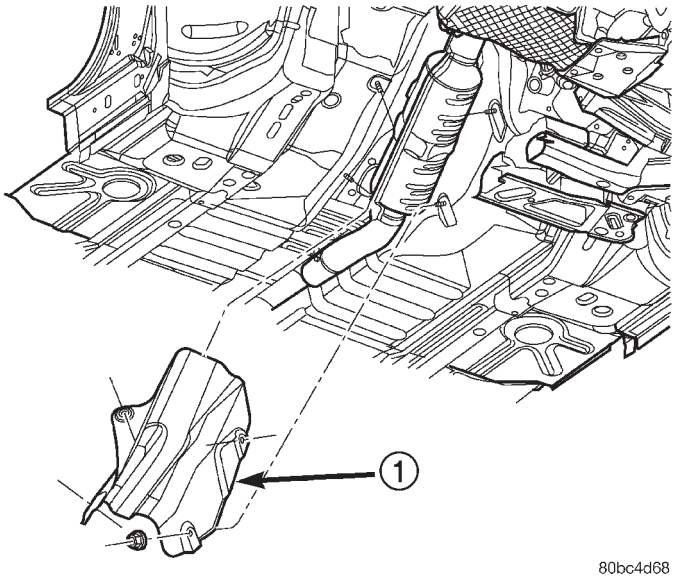

Fig. 19 Converter Heat Shield Removal/Installation

1 – CONVERTER HEAT SHIELD

REMOVAL AND INSTALLATION (Continued)

(15) Remove remaining grommet plate-to-floor pan screw (Fig. 20).

(16) Remove cable assembly from vehicle.

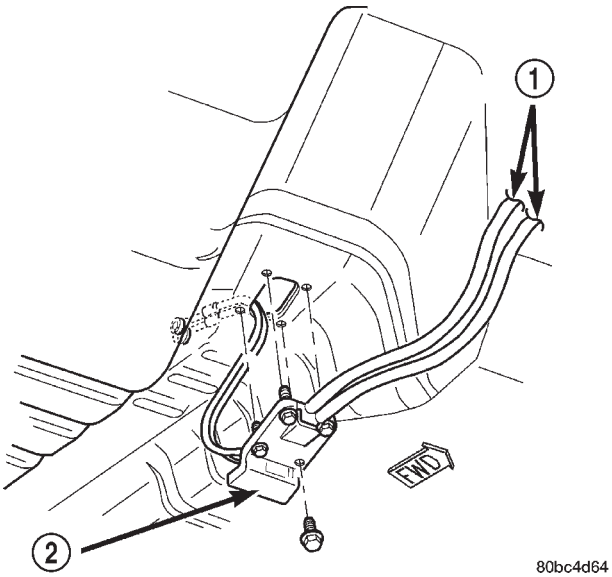

Fig. 20 Shift Cable Assembly at Floor Pan

1 – CABLE ASSEMBLY
2 – GROMMET PLATE

INSTALLATION

CAUTION: Gearshift cable bushings must not be lubricated or the bushings will swell and split.

(1) Raise vehicle on hoist.

(2) Install cable assembly through floor pan opening and secure to floor pan with grommet plate and one screw (Fig. 20). Make sure the three grommet plate studs protrude through cable assembly and floor pan and tighten screw to 7 N·m (60 in. lbs.).

(3) Route transaxle end of cable assembly into engine compartment and over transaxle assembly.

(4) Install converter heat shield (Fig. 19).

(5) Lower vehicle.

(6) Install gearshift cables to mounting bracket and fasten with NEW clips (Fig. 18). Make sure clips are installed flush to bracket.

(7) Connect gearshift selector and crossover cable to shift levers at transaxle (Fig. 18).

(8) Install and tighten the three grommet plate-to-floor pan nuts to 6 N·m (50 in. lbs.) torque.

(9) Install selector cable to shifter lever and secure cable to shifter bracket. Install clip (Fig. 14).

(10) Install crossover cable to shifter lever and secure cable to shifter bracket. Install clip (Fig. 13).

NOTE: Only the crossover cable is adjustable. The selector cable does not have any adjustment capabilities.

(11) **Adjust crossover cable as follows:**

(a) Loosen adjusting screw on crossover cable at shifter (Fig. 21).

(b) Pin transaxle crossover lever in 3-4-N position using a 1/4 inch drill bit. Align hole in crossover lever with the hole in the boss on the transaxle case (Fig. 22). Be sure drill bit goes into transaxle case at least one half inch.

(c) The shifter is spring–loaded and self–centering. Allow shifter to rest in its neutral position. Torque adjustment screw to 8 N·m (70 in. lbs.). Care must be taken to avoid moving the shift mechanism off-center during screw tightening.

(d) Remove drill bit from transaxle case and perform functional check by shifting transaxle into all gears.

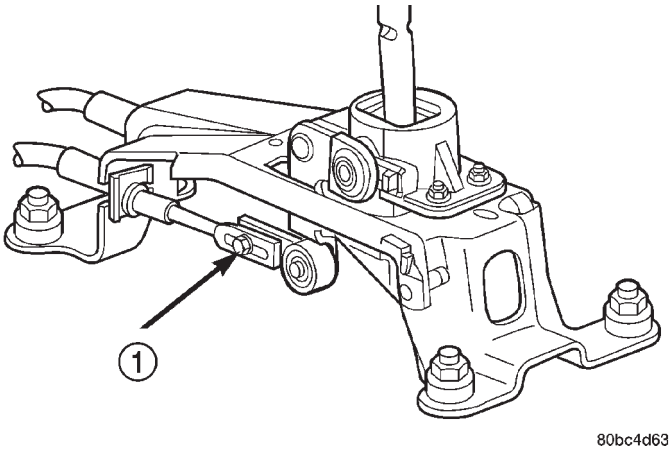

Fig. 21 Crossover Cable Adjustment Screw

1 – CROSSOVER ADJUSTMENT SCREW

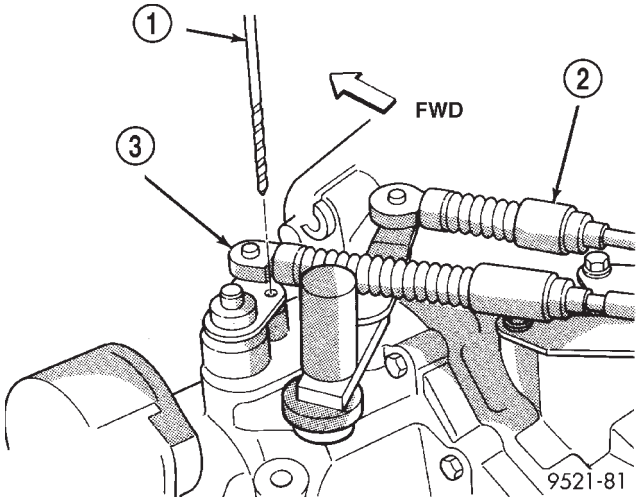

Fig. 22 Crossover Lever Pin Procedure

1 – ¼'' DRILL BIT
2 – SELECTOR CABLE
3 – CROSSOVER CABLE

REMOVAL AND INSTALLATION (Continued)

(12) Install center console assembly (Fig. 12). Verify that boot is not pinched at console opening before tightening.

(13) Position gearshift boot (Fig. 11) over the gearshift mechanism and engage tab on mount ring at front to opening in console. Apply hand pressure to engage bosses on mount ring of boot to console opening slots.

(14) Position gearshift knob hole over the gearshift mechanism (Fig. 10) and align the shift pattern.

(15) Strike knob with rubber mallet to engage knob to mechanism.

(16) Verify that shift pattern is aligned properly.

(17) Install battery tray (Fig. 17).

(18) Install battery and hold-down clamp (Fig. 16).

(19) Install the air cleaner assembly (Fig. 15).

(20) Connect battery cables.

GEARSHIFT MECHANISM REPLACEMENT

REMOVAL

(1) Pull up on gearshift knob with moderate force to remove from gearshift mechanism (Fig. 23).

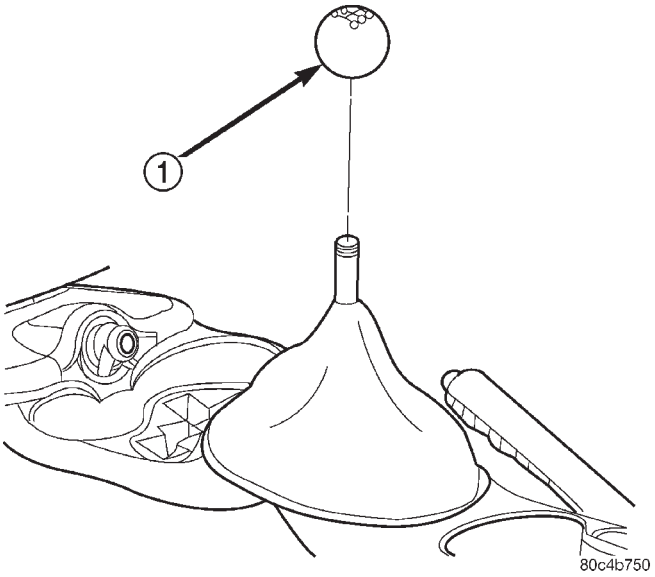

Fig. 23 Gearshift Knob Removal/Installation

1 – GEARSHIFT KNOB

(2) Remove shifter boot/bezel assembly from console by lifting up at mounting ring area (Fig. 24).

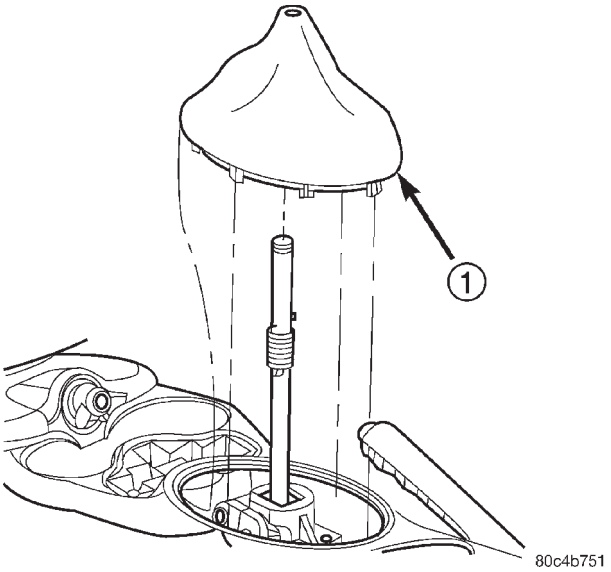

Fig. 24 Gearshift Boot Removal/Installation

1 – GEARSHIFT BOOT

(3) Remove the center console assembly as shown in (Fig. 25). Remove rear power window switch (if equipped) and disconnect harness from console.

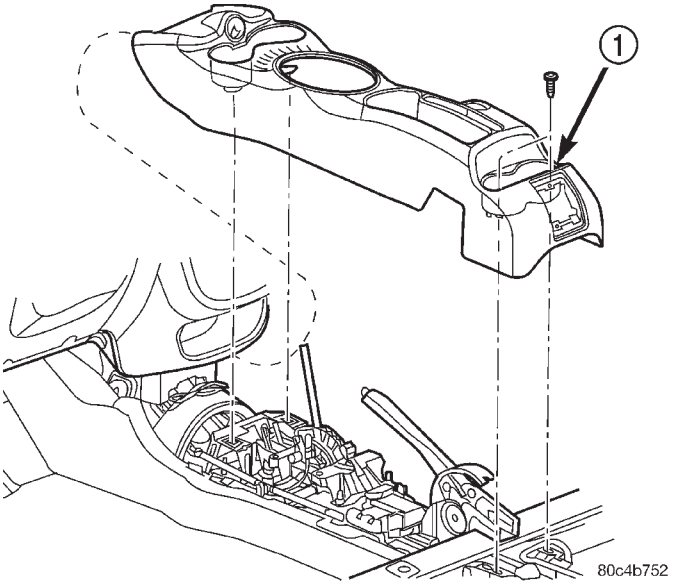

Fig. 25 Center Console Removal/Installation— Typical

1 – CENTER CONSOLE

REMOVAL AND INSTALLATION (Continued)

(4) Remove crossover cable retaining clip and disconnect from shift lever (Fig. 26).

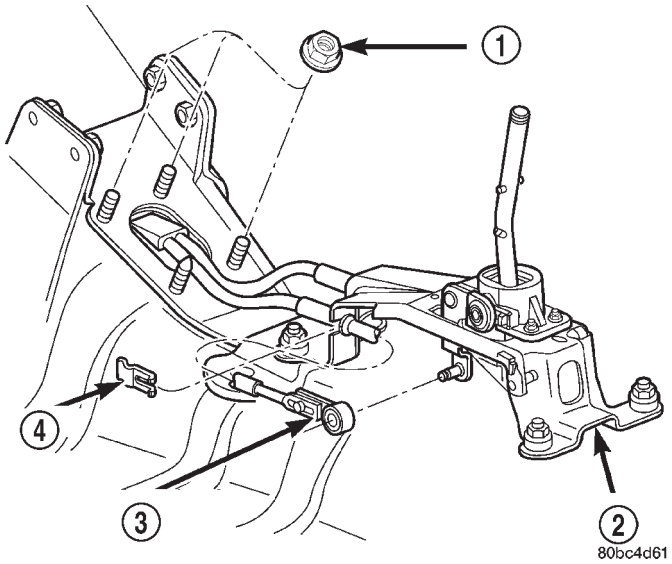

Fig. 26 Crossover Cable at Shifter Assembly

1 – GROMMET PLATE NUT
2 – SHIFTER
3 – CROSSOVER CABLE
4 – CLIP

(5) Remove selector cable retaining clip and disconnect from shift lever (Fig. 27).

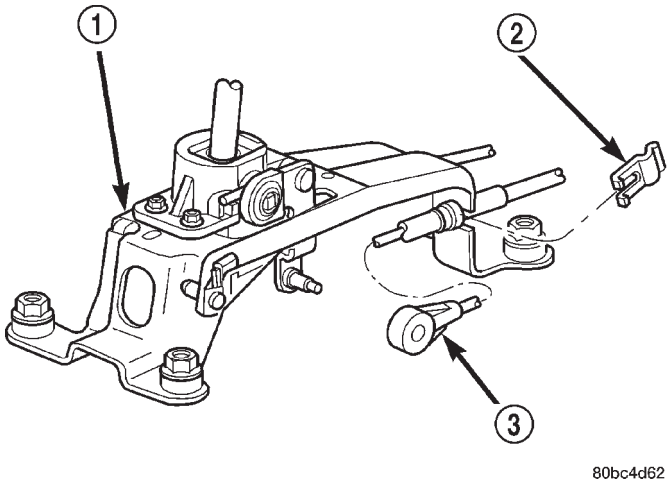

Fig. 27 Selector Cable at Shifter Assembly

1 – SHIFTER
2 – CLIP
3 – SELECTOR CABLE

(6) Remove four shifter assy.-to-floor pan nuts and remove shifter from vehicle (Fig. 28).

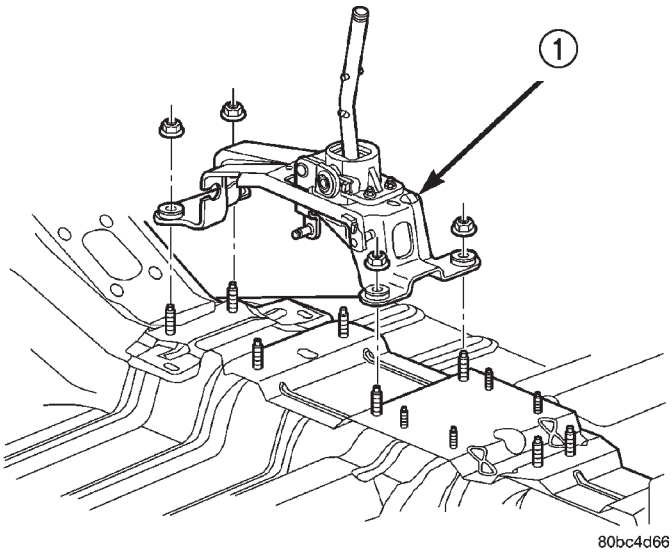

Fig. 28 Shifter Assy. Removal/Installation

1 – SHIFTER ASSEMBLY

INSTALLATION

(1) Install shifter assy. to floor pan (Fig. 28). Install and tighten four nuts to 12 N·m (105 in. lbs.) torque.

(2) Install selector cable to shifter lever and secure cable to shifter bracket. Install clip (Fig. 27).

(3) Install crossover cable to shifter lever and secure cable to shifter bracket. Install clip (Fig. 26).

NOTE: Only the crossover cable is adjustable. The selector cable does not have any adjustment capabilities.

(4) **Adjust crossover cable as follows:**

(a) Loosen adjusting screw on crossover cable at shifter (Fig. 29).

(b) Pin transaxle crossover lever in 3-4-N position using a 1/4 inch drill bit. Align hole in crossover lever with the hole in the boss on the transaxle case (Fig. 30). Be sure drill bit goes into transaxle case at least one half inch.

(c) The shifter is spring–loaded and self–centering. Allow shifter to rest in its neutral position. Torque adjustment screw to 8 N·m (70 in. lbs.). Care must be taken to avoid moving the shift mechanism off-center during screw tightening.

(d) Remove drill bit from transaxle case and perform functional check by shifting transaxle into all gears.

(5) Install center console assembly (Fig. 25). Install rear power window switch (if equipped) and fasten harness to console.

REMOVAL AND INSTALLATION (Continued)

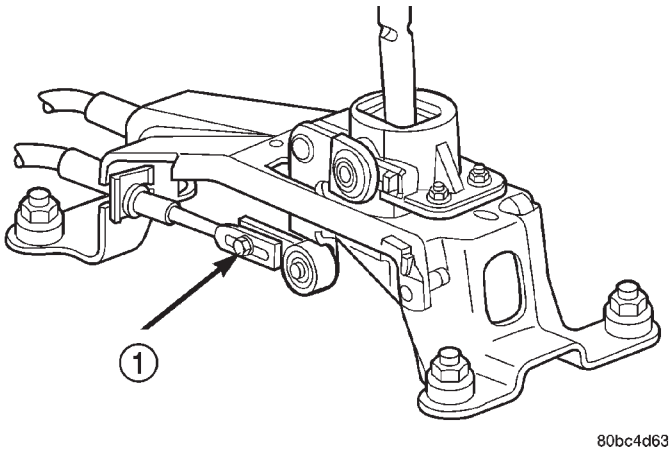

Fig. 29 Crossover Cable Adjustment Screw

1 – CROSSOVER ADJUSTMENT SCREW

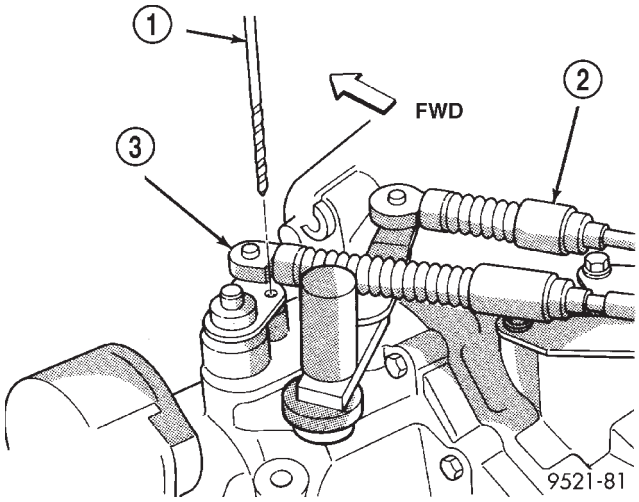

Fig. 30 Crossover Lever Pin Procedure

1 – ¼'' DRILL BIT
2 – SELECTOR CABLE
3 – CROSSOVER CABLE

(6) Position gearshift boot (Fig. 24) over the gearshift mechanism and engage tab on mount ring at front to opening in console. Apply hand pressure to engage bosses on mount ring of boot to console opening slots.

(7) Position gearshift knob hole over the gearshift mechanism (Fig. 23) and align the shift pattern.

(8) Strike knob with rubber mallet to engage knob to mechanism.

(9) Verify that shift pattern is aligned properly.

VEHICLE SPEED SENSOR AND DRIVE PINION

REMOVAL

(1) Raise vehicle on hoist.

(2) Disconnect the speed sensor connector (Fig. 31).

CAUTION: Clean area around speed sensor before removing to prevent dirt from entering the transaxle during speed sensor removal.

(3) Remove speed sensor retaining bolt (Fig. 31).

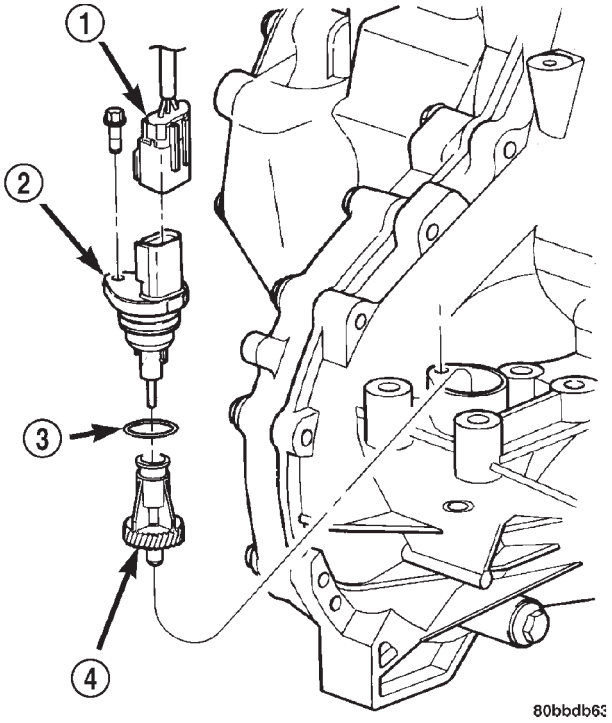

Fig. 31 Speed Sensor and Pinion—Removal/ Installation

1 – CONNECTOR
2 – SENSOR
3 – O-RING
4 – SPEEDO PINION

(4) Remove speed sensor from transaxle.

CAUTION: Carefully remove vehicle speed sensor so that sensor drive gear does not fall into transaxle. Should sensor drive gear fall into the transaxle during sensor removal, drive gear must be reattached to sensor.

(5) Remove speed sensor drive gear from speed sensor.

INSTALLATION

(1) Install pinion gear to speed sensor (Fig. 31).

(2) Using a NEW o-ring, install the speed sensor to the transaxle (Fig. 31).

(3) Install the bolt and torque to 7 N·m (60 in. lbs.).

(4) Connect speed sensor connector (Fig. 31).

(5) Lower vehicle and road test to verify proper speedometer operation.

REMOVAL AND INSTALLATION (Continued)

BACK-UP LAMP SWITCH

REMOVAL

(1) Lift vehicle on hoist.

(2) From bottom side of vehicle, disconnect back-up lamp switch connector (Fig. 32).

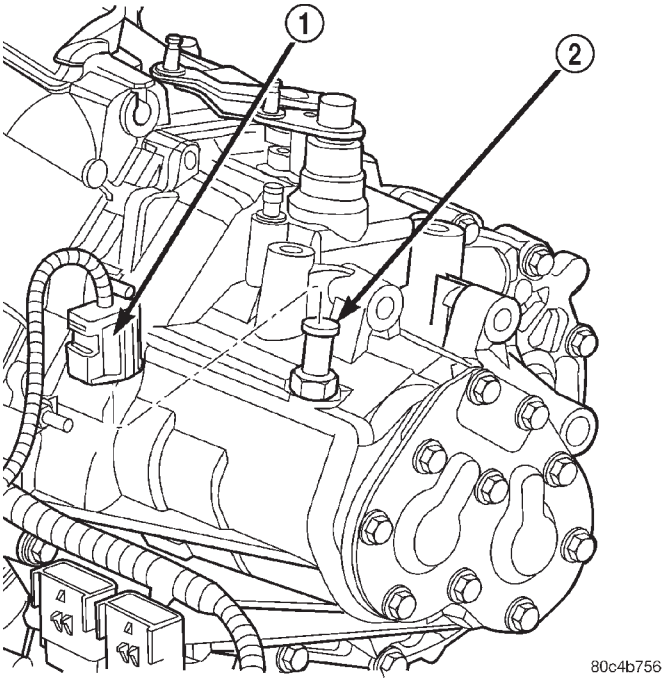

Fig. 32 Back-Up Lamp Switch

1 – CONNECTOR
2 – BACK UP LAMP SWITCH

(3) Unscrew switch from transaxle.

INSTALLATION

(1) Install back-up lamp switch. Teflon tape or equivalent must be used on switch threads. Tighten switch to 24 N·m (18 ft. lbs.) torque.

CAUTION: Do not overtighten switch.

(2) Connect back-up lamp switch connector (Fig. 32).

(3) Lower vehicle.

(4) Verify back-up lamp operation.

CROSSOVER LEVER

REMOVAL

(1) Disconnect crossover cable from crossover lever and cable bracket. Refer to Gearshift Cable Removal and Installation in this Group.

(2) Using a pin punch, remove the crossover roll pin from lever.

(3) Pull up and remove the crossover lever from the transaxle crossover shaft (Fig. 33).

INSTALLATION

(1) Install crossover lever to shaft and fasten with NEW roll pin.

(2) Install crossover cable to bracket. Fasten with clip.

(3) Install crossover cable to crossover lever.

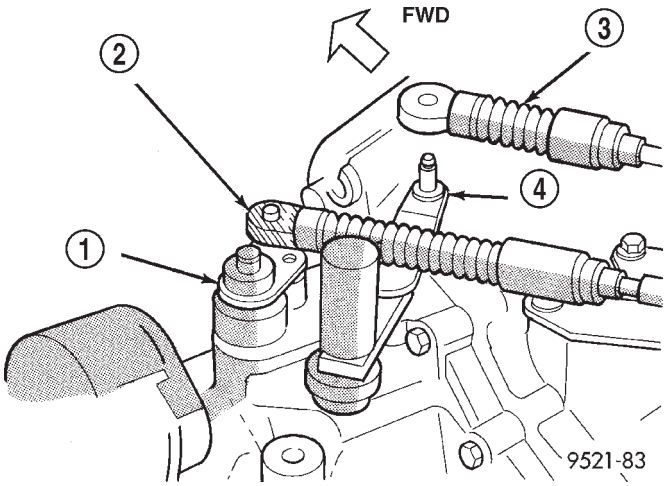

Fig. 33 Crossover Lever

1 – CROSSOVER LEVER
2 – CROSSOVER CABLE
3 – SELECTOR CABLE
4 – SELECTOR LEVER

SELECTOR LEVER

REMOVAL

(1) Disconnect the selector cable from the selector lever (Fig. 34) and remove from cable bracket. Refer to Gearshift Cable Removal and Installation.

(2) Using a pin punch, remove both roll pins from the lever.

(3) Pull up and remove the selector lever from the transaxle selector shaft.

INSTALLATION

(1) Install the selector lever to the shaft and fasten with two NEW roll pins. Refer to (Fig. 35) for correct roll pin orientation.

(2) Install selector cable to cable bracket and install clip. Install cable to selector lever.

AXLE SHAFT SEALS

REMOVAL

(1) Remove axle shaft. Refer to DIFFERENTIAL AND DRIVELINE for the correct procedures.

(2) Insert a flat–blade pry tool at outer edge of axle shaft seal (Fig. 36).

(3) Tap on the pry tool with a small hammer and remove axle shaft seal.

REMOVAL AND INSTALLATION (Continued)

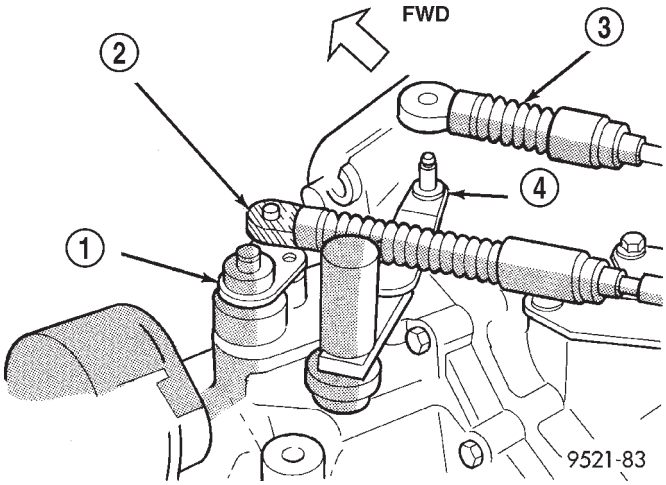

Fig. 34 Shift Cables at Transaxle

1 – CROSSOVER LEVER
2 – CROSSOVER CABLE
3 – SELECTOR CABLE
4 – SELECTOR LEVER

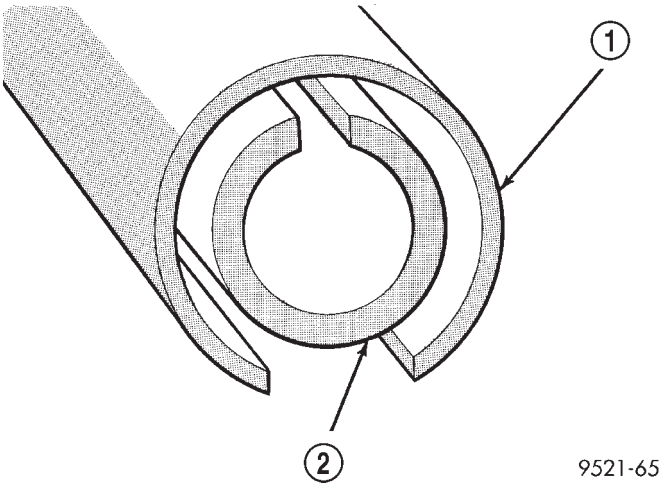

Fig. 35 Correct Orientation of Roll Pins

1 – OUTER ROLL PIN
2 – INNER ROLL PIN

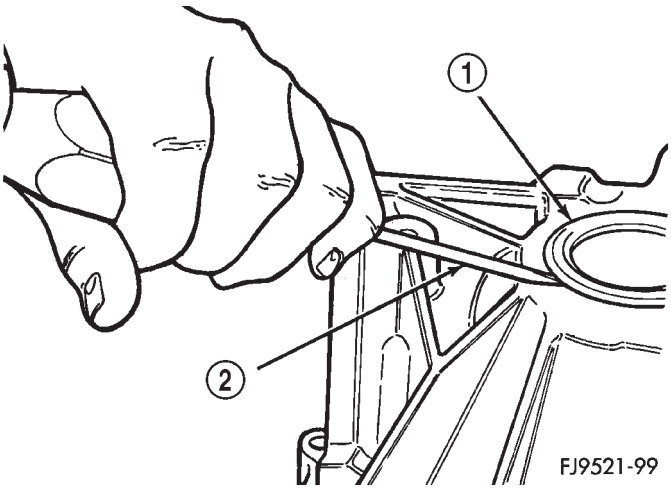

Fig. 36 Axle Shaft Seal Removal

1 – AXLE SEAL
2 – PRY TOOL

INSTALLATION

(1) Clean axle shaft seal bore of any excess sealant.

(2) Align axle shaft seal with axle shaft seal bore.

(3) Install axle seal on tool #6709 and C-4171 and insert into axle shaft seal bore.

(4) Tap seal into position until seated against transaxle case.

(5) Install axle shaft. Refer to DIFFERENTIAL AND DRIVELINE for the correct procedures.

SHIFT SHAFT SEALS

It is **not** necessary to remove the shift shafts from the transaxle to service the shift shaft seals.

REMOVAL

(1) Using a pick tool, pry up on the shift shaft seal and remove seal from bore.

INSTALLATION

(1) Position new shift shaft seal in bore.

(2) Install shift shaft seal into bore using an appropriate size deep–well socket.

REMOVAL AND INSTALLATION (Continued)

TRANSAXLE

REMOVAL

(1) Raise hood.
(2) Remove air cleaner assembly (Fig. 37).

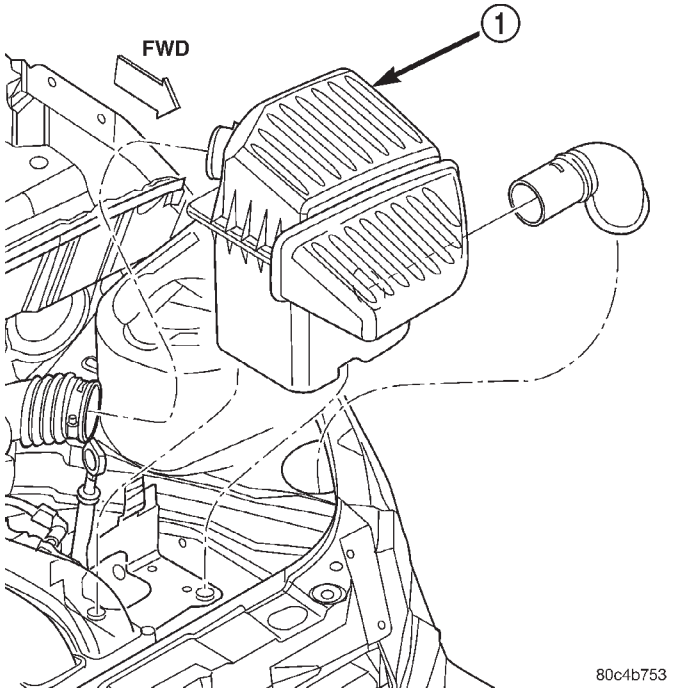

Fig. 37 Air Cleaner Assembly Removal/Installation
1 – AIR CLEANER ASSEMBLY

(3) Disconnect both battery cables.
(4) Remove battery hold down clamp and bolt, and remove battery (Fig. 38).
(5) Remove battery tray from bracket (Fig. 39).
(6) Disconnect back-up lamp switch connector (Fig. 40).
(7) Remove shift cable-to-bracket clips (Fig. 41).
(8) Disconnect shift selector and crossover cable from levers (Fig. 41). Remove cables and secure out of the way.
(9) Disconnect the vehicle speed sensor connector (Fig. 42).
(10) Raise vehicle on hoist.
(11) Remove transaxle oil drain plug (Fig. 43) and drain oil into a suitable container. Reinstall drain plug and torque to 28 N·m (250 in. lbs.) torque.

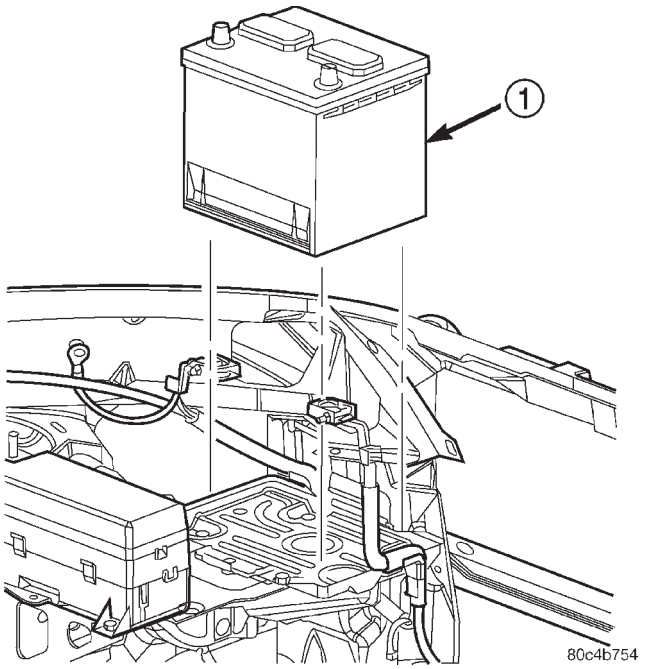

Fig. 38 Battery Removal/Installation
1 – BATTERY

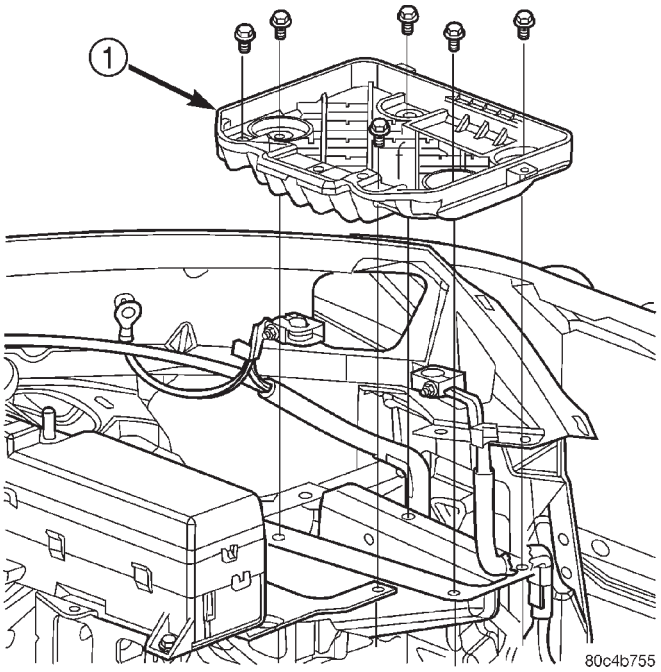

Fig. 39 Battery Tray Removal/Installation
1 – BATTERY TRAY

REMOVAL AND INSTALLATION (Continued)

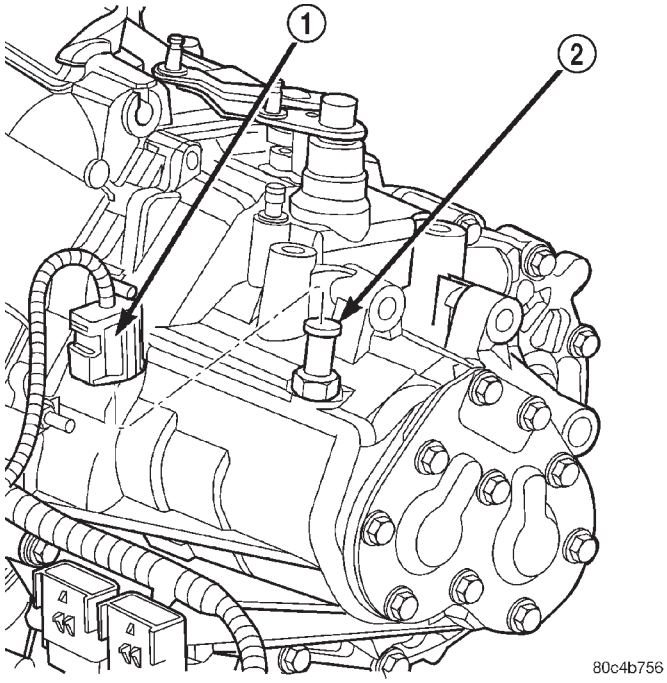

Fig. 40 Back-up Lamp Switch Connector

1 – CONNECTOR
2 – BACK UP LAMP SWITCH

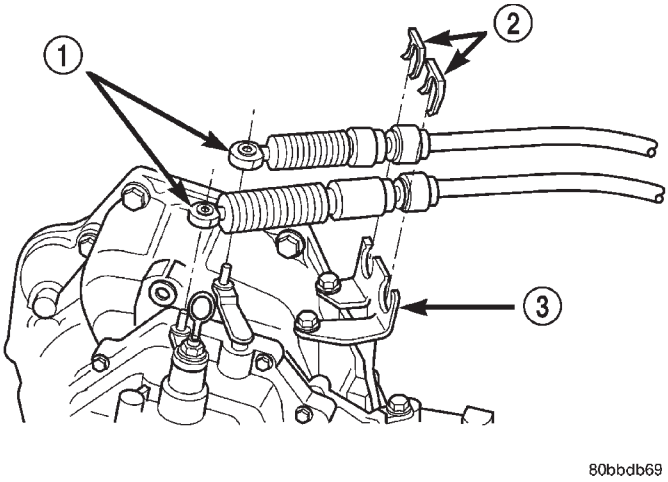

Fig. 41 Shift Cables at Transaxle

1 – SHIFT CABLES
2 – CLIPS
3 – BRACKET

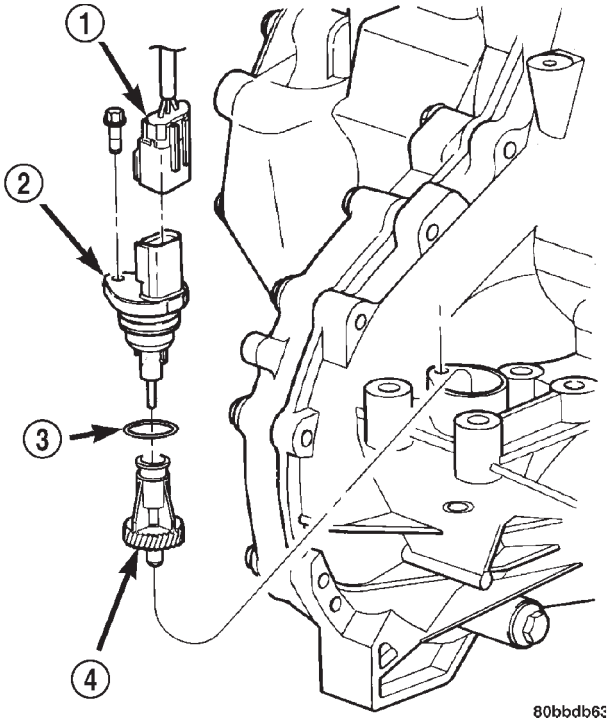

Fig. 42 Vehicle Speed Sensor Connector

1 – CONNECTOR
2 – SENSOR
3 – O-RING
4 – SPEEDO PINION

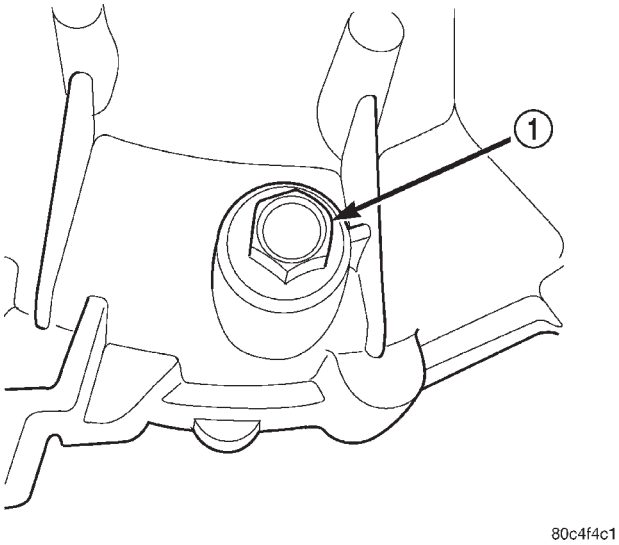

Fig. 43 Transaxle Drain Plug

1 – DRAIN PLUG

REMOVAL AND INSTALLATION (Continued)

(12) Using tool 6638A (Fig. 44), disconnect clutch master cylinder hydraulic tube from the hydraulic clutch slave cylinder (Fig. 45).

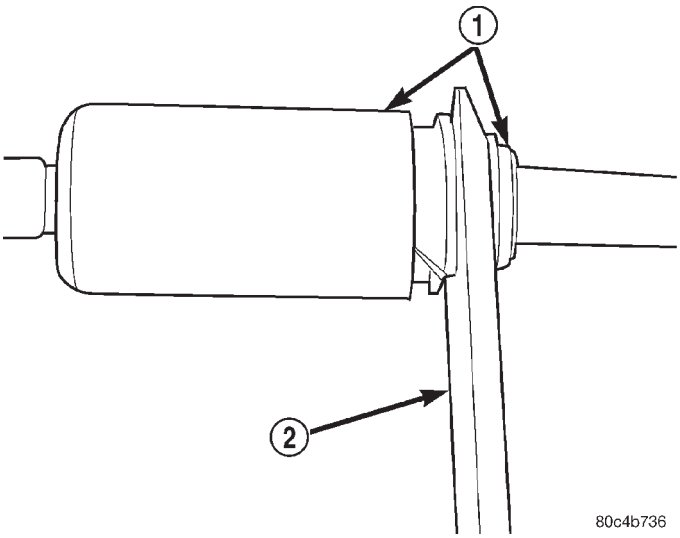

Fig. 44 Disconnect Clutch Hydraulic Quick Connect using Tool 6638A

1 – QUICK CONNECT FITTING
2 – TOOL 6638A

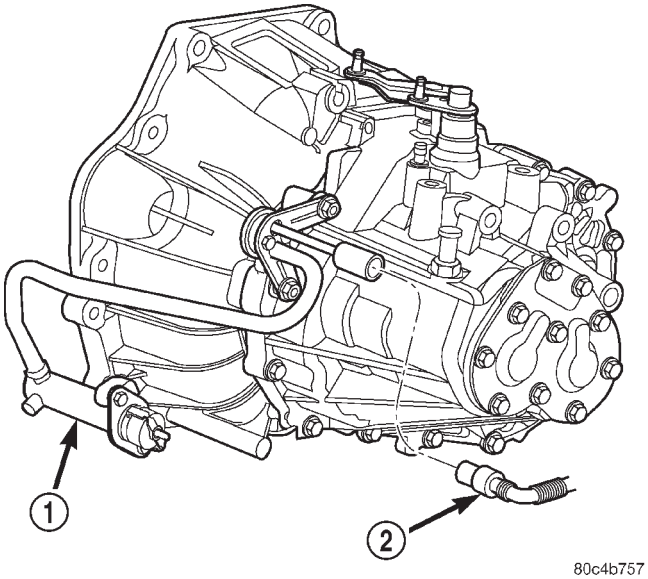

Fig. 45 Clutch Slave Cylinder Connection

1 – SLAVE CYLINDER
2 – HYDRAULIC TUBE

(13) Remove both axle half shafts. Refer to DIFFERENTIAL AND DRIVELINE for the correct procedures.

(14) Disconnect power steering hose from structural collar (Fig. 46)

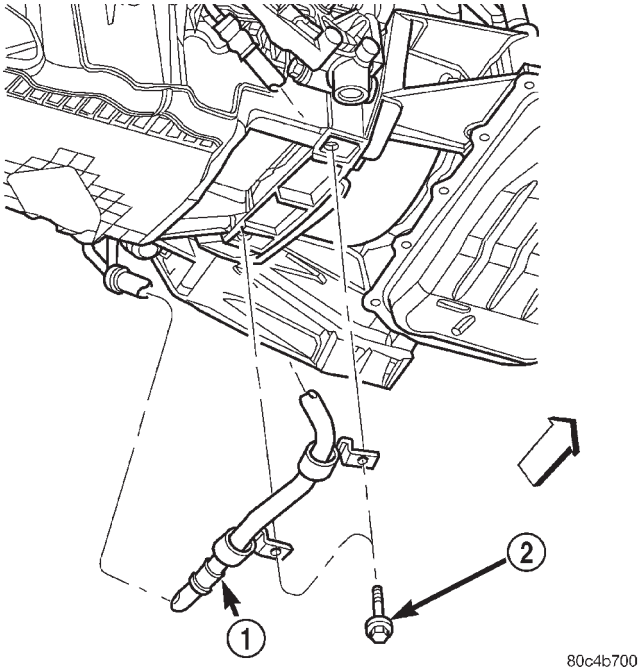

Fig. 46 Power Steering Hose to Structural Collar

1 – POWER STEERING HOSE
2 – BOLT

(15) Remove the left engine-to-transaxle lateral bending brace and structural collar (Fig. 47).

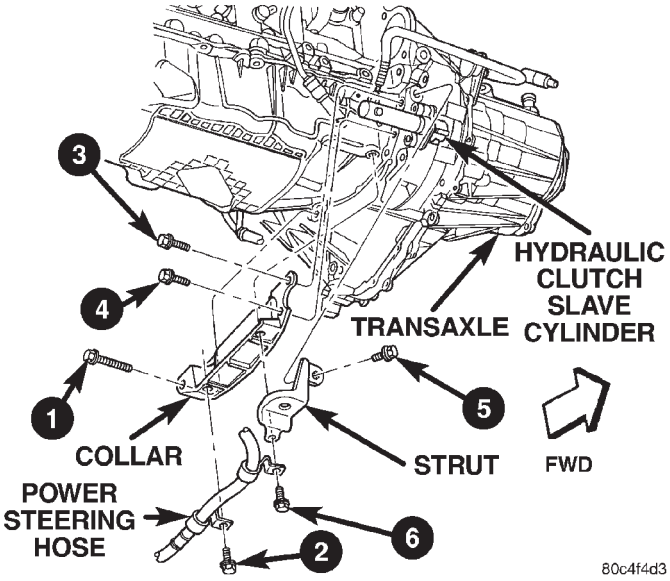

Fig. 47 Left Lateral Bending Brace and Structural Collar—Typical

REMOVAL AND INSTALLATION (Continued)

(16) Remove bellhousing dust cover (Fig. 48).

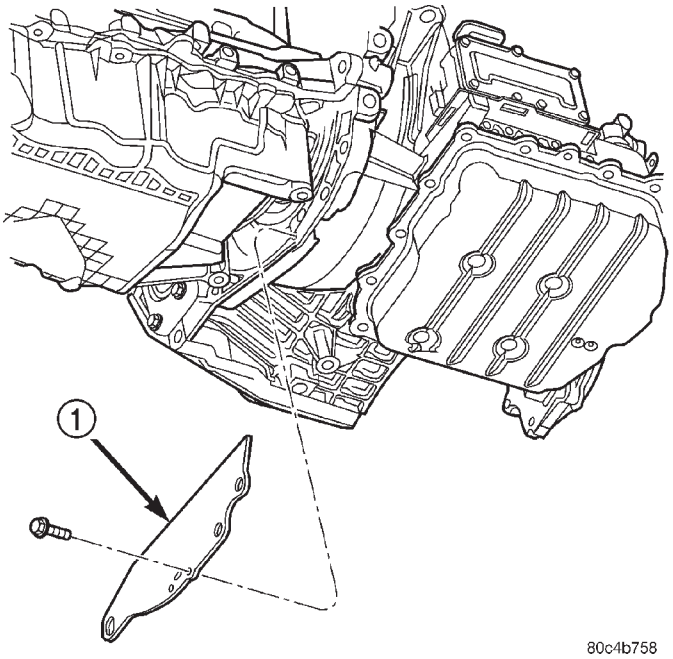

Fig. 48 Bellhousing Dust Cover Removal/Installation

1 – DUST COVER

(17) Remove the right engine-to-transaxle lateral bending brace (Fig. 49).

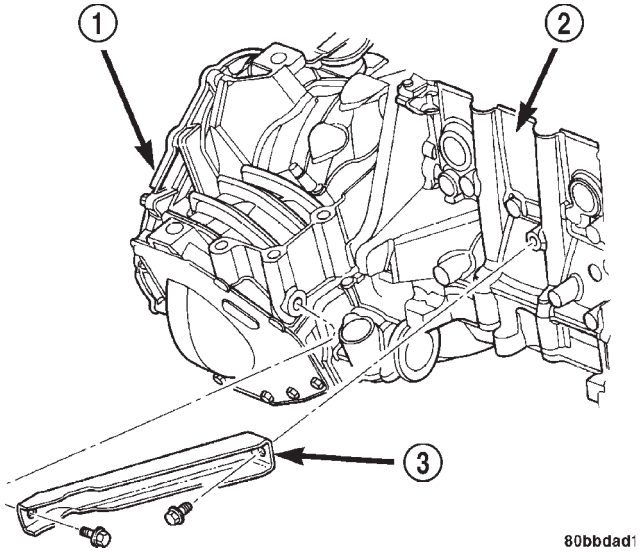

Fig. 49 Right Lateral Bending Brace Removal/ Installation—Typical

1 – TRANSAXLE
2 – ENGINE
3 – LATERAL BENDING BRACE

(18) Remove starter motor (Fig. 50).

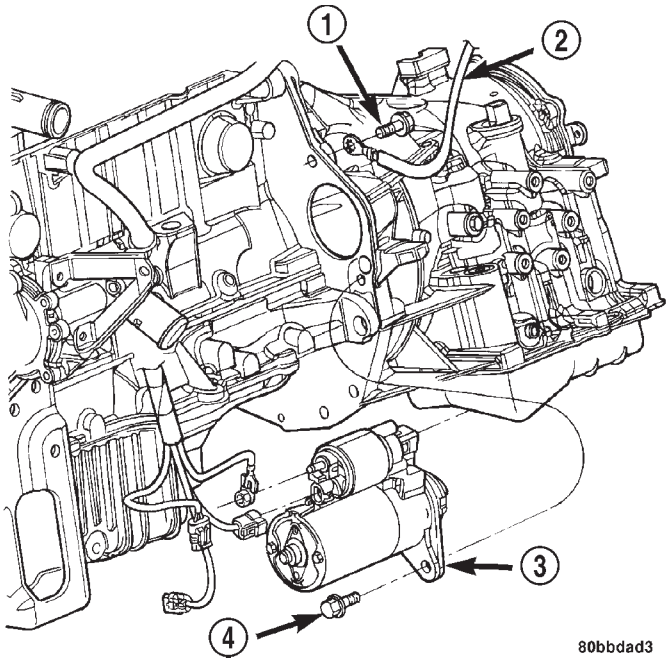

Fig. 50 Starter Motor Removal/Installation—Typical

1 – BOLT
2 – GROUND
3 – STARTER
4 – BOLT

(19) Remove drive plate-to-clutch module bolts (Fig. 52).

(20) Support engine at oil pan with screw jack and wood block.

(21) Remove transaxle upper mount bolts (Fig. 51).

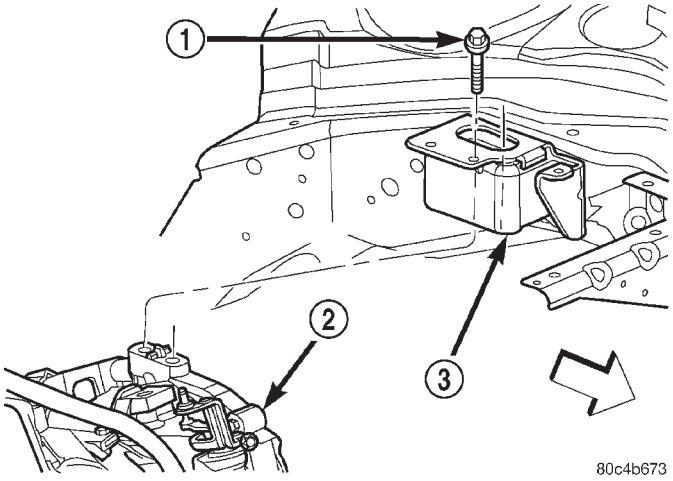

Fig. 51 Transaxle Upper Mount Bolts—Typical

1 – BOLT
2 – TRANSAXLE
3 – LEFT MOUNT

REMOVAL AND INSTALLATION (Continued)

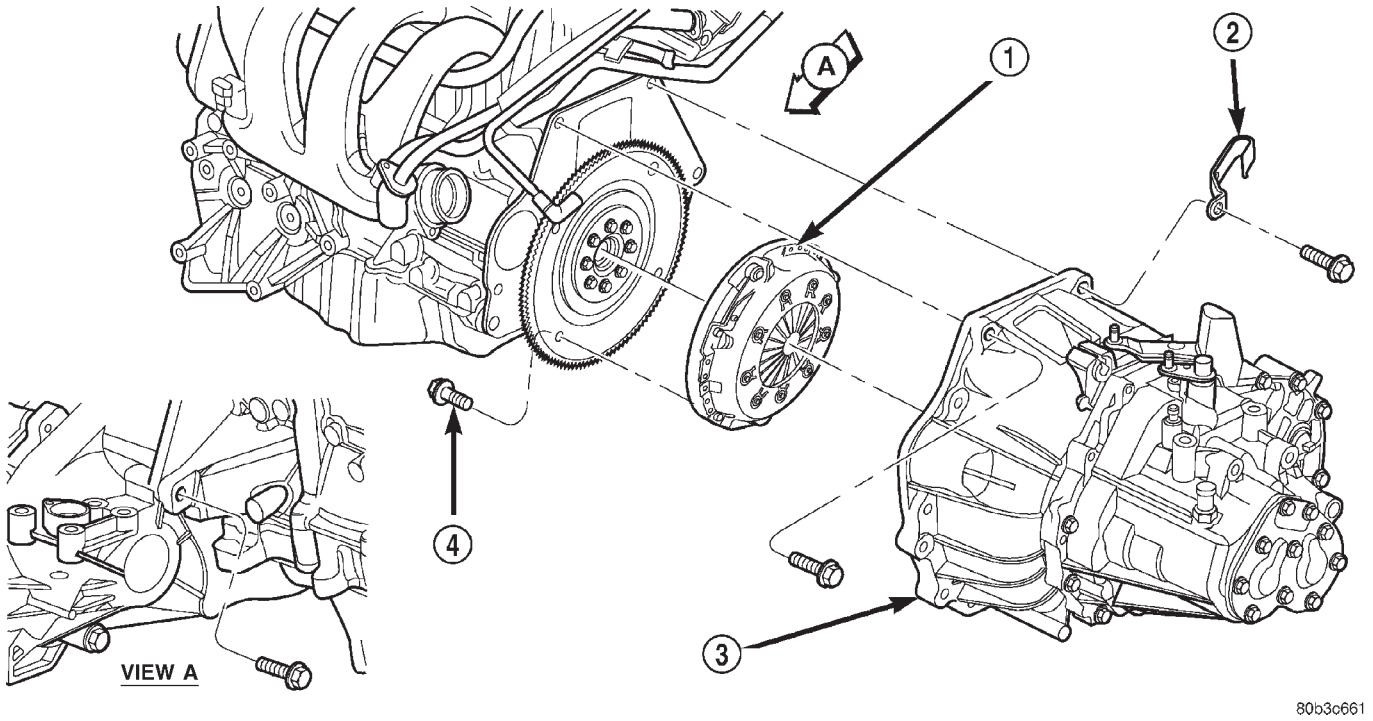

Fig. 52 Transaxle Removal/Installation

1 – MODULAR CLUTCH ASSEMBLY
2 – CLIP
3 – TRANSAXLE
4 – CLUTCH MODULE BOLT (4)

(22) Carefully lower engine and transaxle on screw jack until proper removal clearance is obtained.

(23) Obtain a helper to assist in holding transaxle while removing transaxle-to-engine mounting bolts (Fig. 52).

(24) Remove transaxle from vehicle (Fig. 52).

(25) Remove clutch module (Fig. 52) from transaxle input shaft.

(26) If installing a new or replacement transaxle, remove the clutch slave cylinder as shown in (Fig. 53), and transfer to the replacement unit.

(27) If installing a new or replacement transaxle, remove the upper mount as shown in (Fig. 54), transfer to the replacement unit and torque all bolts to 62 N·m (45 ft. lbs.) torque.

INSTALLATION

(1) Install clutch module onto input shaft. Install transaxle into position.

(2) Install transaxle-to-engine mounting bolts (Fig. 52) and tighten to 108 N·m (80 ft. lbs.) torque.

(3) Raise engine and transaxle with screw jack until upper mount bracket aligns with upper mount. Install mount bolts and tighten to 68 N·m (50 ft. lbs.) torque (Fig. 51).

(4) Remove screwjack.

(5) Install drive plate-to-clutch module bolts and torque to 88 N·m (65 ft. lbs.) torque.

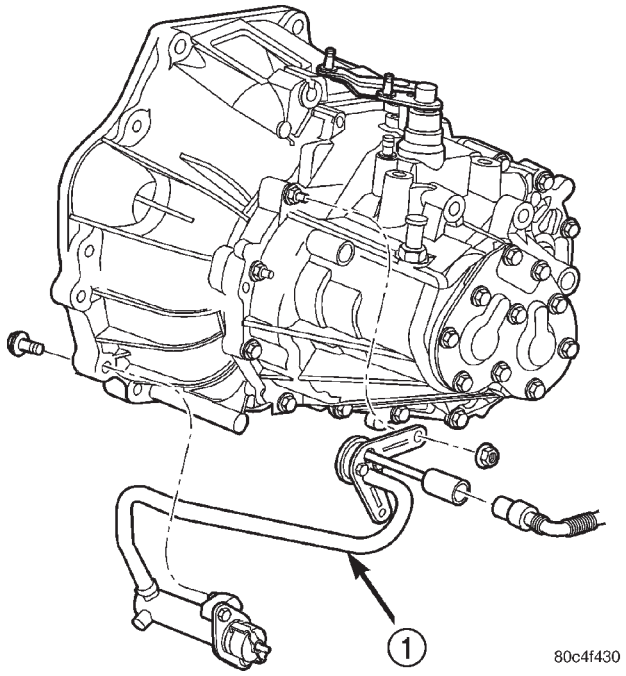

Fig. 53 Hydraulic Clutch Slave Cylinder

1 – SLAVE CYLINDER

(6) Install starter motor and tighten bolts to 54 N·m (40 ft. lbs.) torque. Make sure to fasten ground cable to upper starter bolt as shown in (Fig. 50).

REMOVAL AND INSTALLATION (Continued)

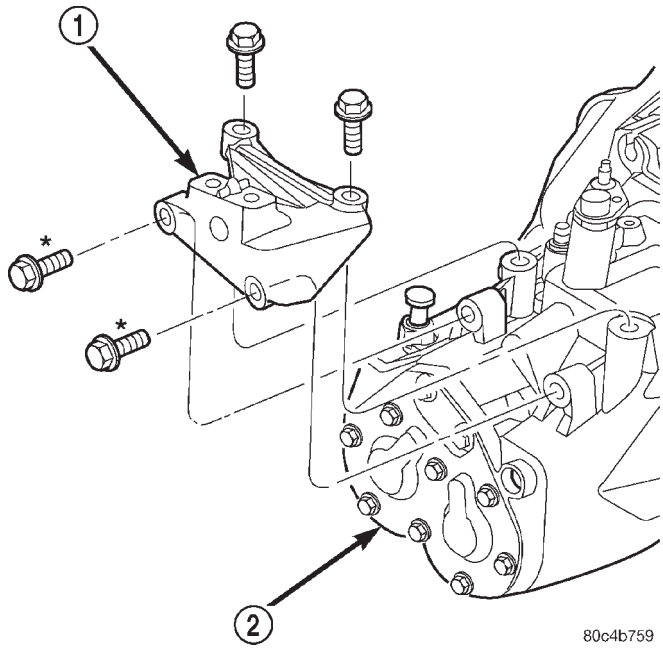

Fig. 54 Transaxle Upper Mount Bracket

1 – BRACKET
2 – TRANSAXLE

(7) Connect starter electrical harness and tighten positive cable nut to 10 N·m (90 in. lbs.) torque.

(8) Install bellhousing dust cover (Fig. 48).

(9) Install left engine-to-transaxle bending brace and structural collar (Fig. 47). Refer to ENGINE for proper tightening procedure.

(10) Install power steering hose to structural collar.

(11) Install the right lateral bending brace and tighten bolts to 81 N·m (60 ft. lbs.) torque (Fig. 49).

(12) Install both front axle driveshafts. Refer to DIFFERENTIAL AND DRIVELINE for the correct procedures.

(13) Fill transaxle with suitable amount of Mopar® Manual Transaxle Lubricant (PN 04874465). Refer to SPECIFICATIONS for correct fluid capacities.

(14) Connect clutch master cylinder tube to the hydraulic clutch slave cylinder (Fig. 45). An audible click should be heard. Verify connection by pushing and pulling quick connect.

(15) Lower vehicle.

(16) Connect vehicle speed sensor connector (Fig. 42).

(17) Connect shift crossover and selector cables to shift lever. Install cables to bracket and install retaining clips (Fig. 41).

(18) Connect back-up lamp switch connector (Fig. 40).

(19) Install battery tray (Fig. 39).

(20) Install battery and tighten hold down clamp to secure battery (Fig. 38).

(21) Install the air cleaner assembly (Fig. 37).

(22) Connect the battery cables.

(23) Road test vehicle and inspect for leaks.

DISASSEMBLY AND ASSEMBLY

TRANSAXLE

The NV T350 (A-578) transaxle internal components can be serviced only by separating the gear case from the bellhousing case.

CAUTION: The transaxle output shaft is serviced as a unit. No disassembly and reassembly is possible. Damage to the transaxle may result.

DISASSEMBLY

(1) Place transaxle on bench.

(2) Remove shift levers. Remove transaxle case half bolts (Fig. 55).

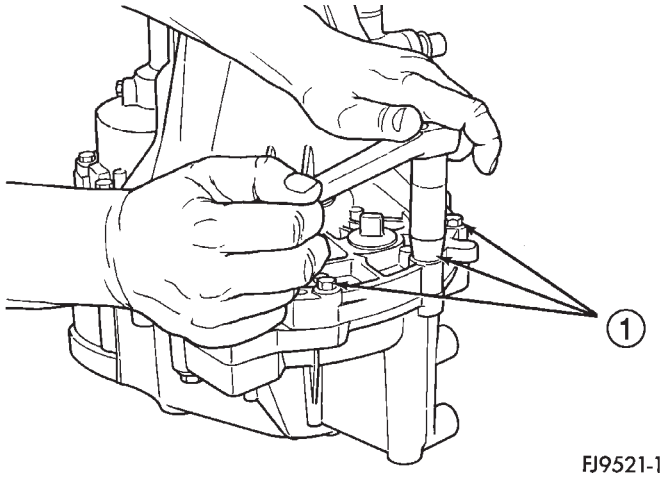

Fig. 55 Case Bolts

1 – CASE BOLTS

(3) Place two screwdrivers into the slots provided in the case halves near the dowels (Fig. 56). Separate the case halves (Fig. 57).

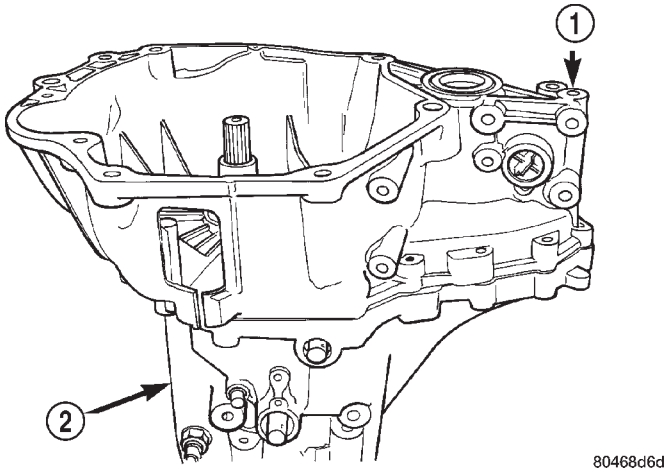

Fig. 56 Transaxle Case Halves

1 – BELLHOUSING HALF
2 – GEAR CASE HALF

DISASSEMBLY AND ASSEMBLY (Continued)

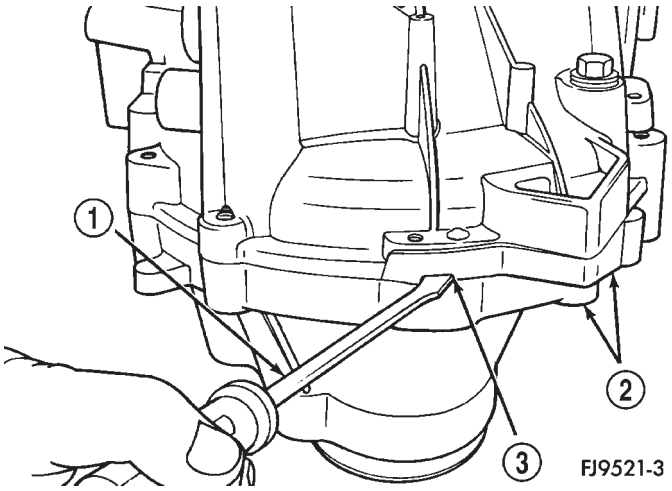

Fig. 57 Separate Case Halves

1 – PRY TOOL
2 – CASE HALVES
3 – PRY SLOT

(4) Remove bellhousing half from gear case half (Fig. 58).

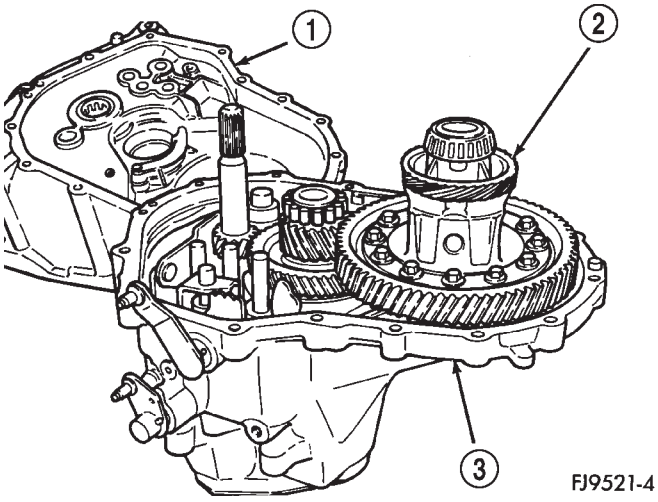

Fig. 58 Bellhousing Case Half Removal

1 – BELLHOUSING CASE HALF
2 – DIFFERENTIAL
3 – GEAR CASE HALF

(5) Remove output shaft roller bearing from output shaft.

(6) Remove differential assembly (Fig. 59).

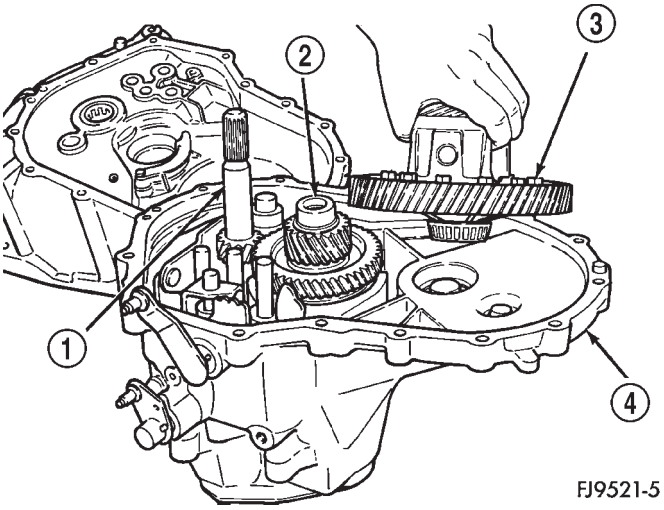

Fig. 59 Differential Assembly Removal

1 – INPUT SHAFT
2 – OUTPUT SHAFT
3 – DIFFERENTIAL
4 – CASE

(7) Remove reverse idler shaft bolt (Fig. 60).

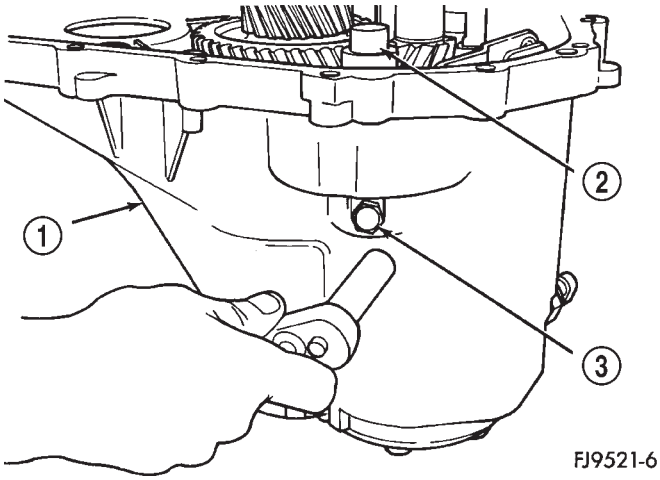

Fig. 60 Reverse Idler Shaft Bolt Removal

1 – CASE
2 – REVERSE IDLER SHAFT
3 – REVERSE IDLER SHAFT BOLT

DISASSEMBLY AND ASSEMBLY (Continued)

(8) Remove reverse idler shaft (Fig. 61).

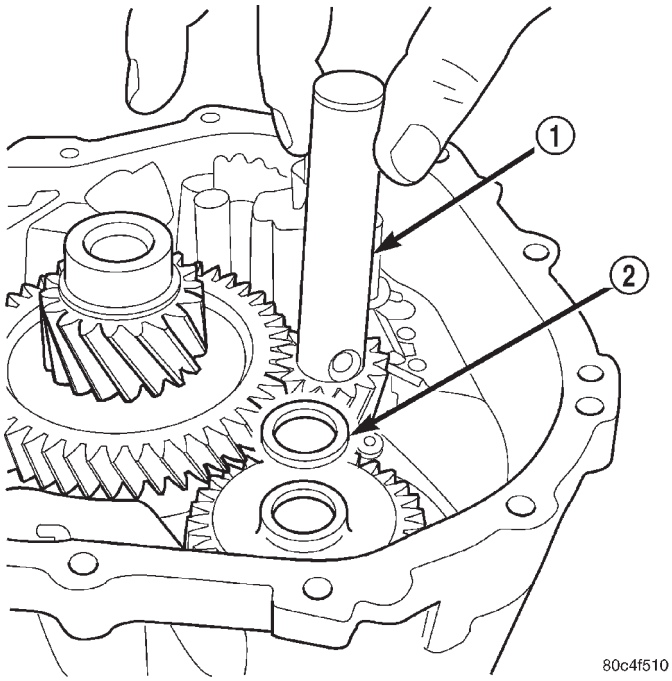

Fig. 61 Reverse Idler Shaft Removal

1 – REVERSE IDLER SHAFT
2 – SPACER

(9) Remove reverse idler gear and spacer (Fig. 62).

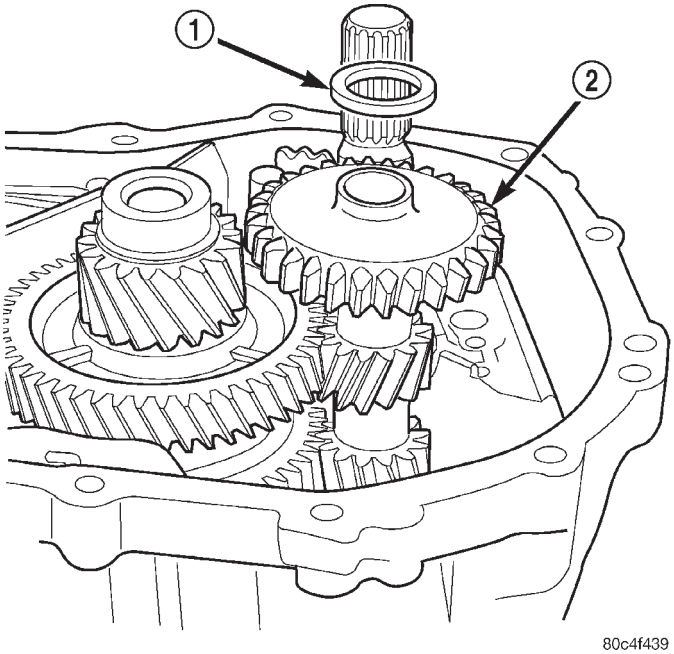

Fig. 62 Reverse Idler Gear and Spacer

1 – SPACER
2 – REVERSE IDLER GEAR

(10) Remove two screws retaining reverse fork bracket (Fig. 63). Remove reverse fork bracket and reverse cam blockout assembly (Fig. 64).

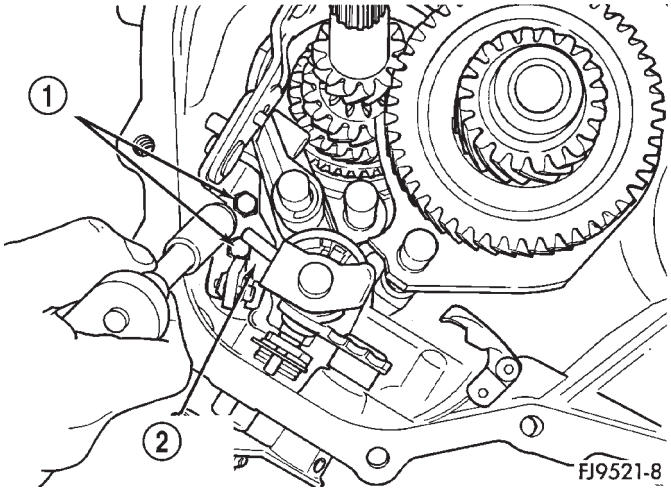

Fig. 63 Screws Retaining Reverse Fork Bracket

1 – SCREWS (2)
2 – REVERSE FORK BRACKET

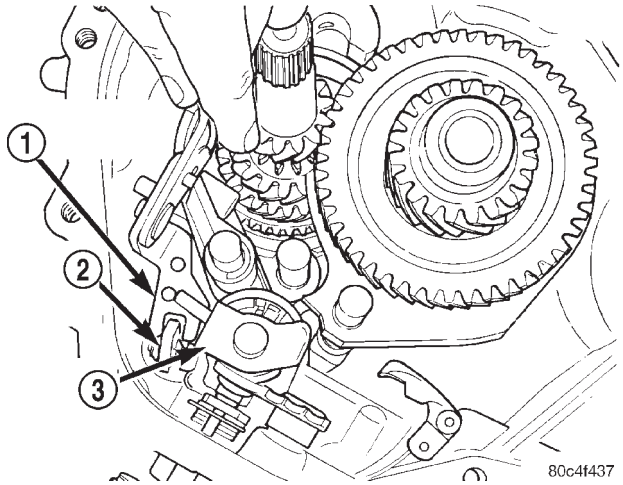

Fig. 64 Remove Reverse Fork Bracket

1 – REVERSE FORK BRACKET
2 – 5th TO REVERSE BLOCKOUT CAM
3 – SHIFT BLOCKER ASSEMBLY

DISASSEMBLY AND ASSEMBLY (Continued)

(11) Using snap–ring pliers, remove selector shaft spacer (Fig. 65).

(12) Pull the selector shaft shift pin out of the slot in the blocker assembly. Turn selector shaft up and out of the way (Fig. 66).

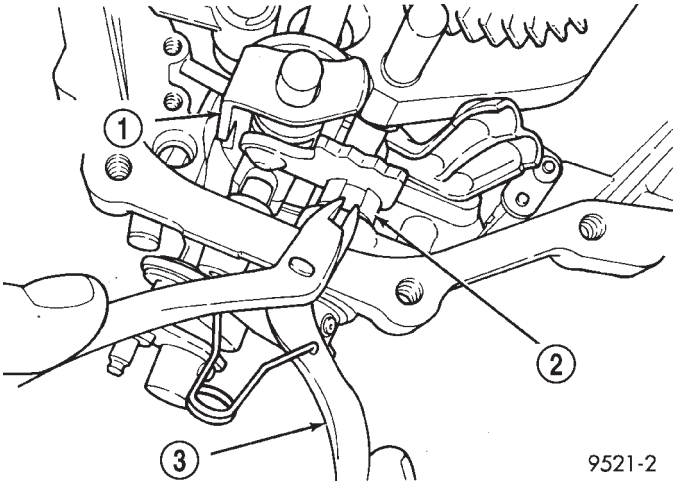

Fig. 65 Remove Selector Shaft Spacer

1 – SHIFT BLOCKER ASSEMBLY
2 – SELECTOR SHAFT SPACER (PLASTIC)
3 – SNAP RING PLIERS

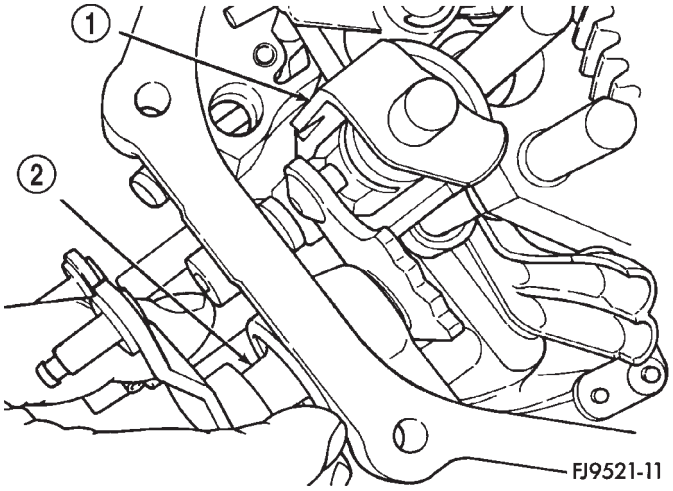

Fig. 66 Selector Shaft

1 – SHIFT ASSEMBLY
2 – SELECTOR SHAFT

(13) Remove transaxle end cover (Fig. 67) (Fig. 68).

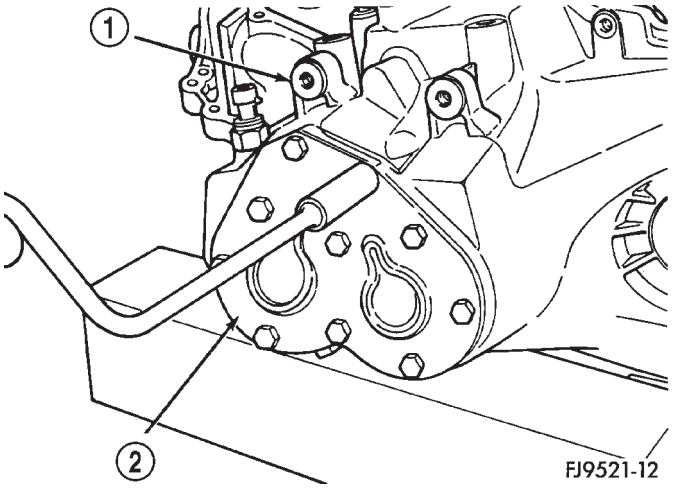

Fig. 67 Transaxle Cover Removal

1 – TRANSAXLE CASE
2 – END COVER

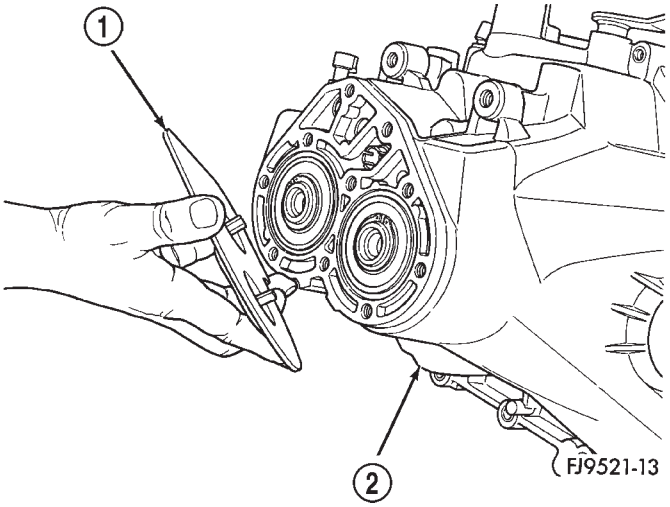

Fig. 68 End Cover

1 – END COVER
2 – CASE

DISASSEMBLY AND ASSEMBLY (Continued)

(14) Remove two snap rings retaining the output shaft and the input shaft to the bearings (Fig. 69).

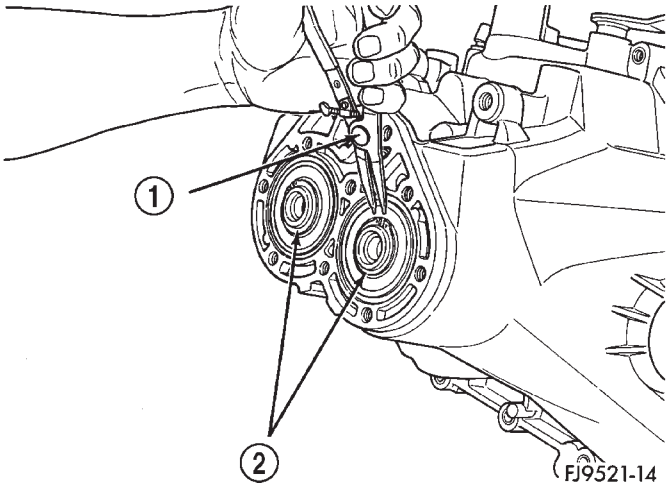

Fig. 69 Snap Rings Retaining Bearings

1 – SNAP RING PLIERS
2 – SNAP RINGS

(15) Using bench fixture and shims provided (Miller tools # 6785, 6785-1, and 6785-2), turn transaxle over. Install transaxle onto bench fixture (Fig. 70). Verify shim spacers are in position on bench fixture. Install transaxle into shop press.

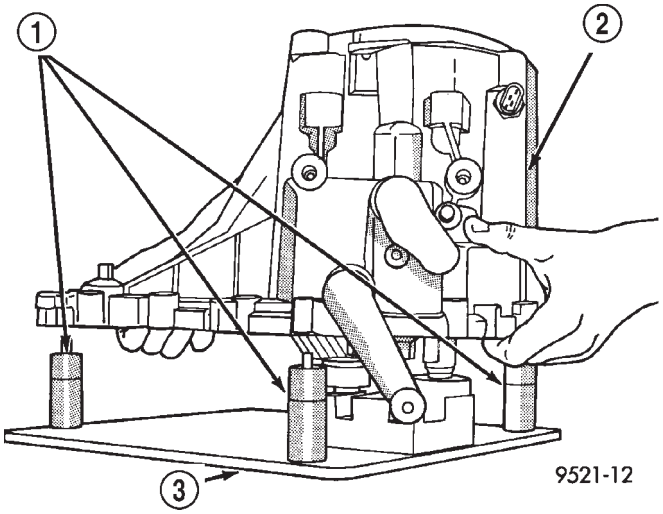

Fig. 70 Bench Fixture

1 – SHIMS
2 – TRANSAXLE
3 – 6785 BENCH FIXTURE

(16) Install bearing fixture Miller tool #6768 onto transaxle end bearings (Fig. 71). Verify tool is properly aligned to input and output shafts.

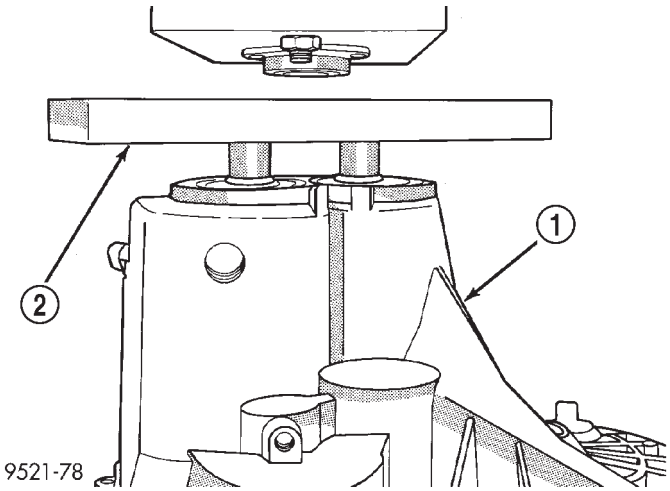

Fig. 71 Bearing Fixture

1 – TRANSAXLE CASE
2 – BEARING FIXTURE

CAUTION: The oil dams in the input and output shafts can be damaged while pressing on the shafts if the bearing fixture is not used properly.

(17) Install transaxle gear case into shop press. Press output and input shaft assemblies out of case (Fig. 72).

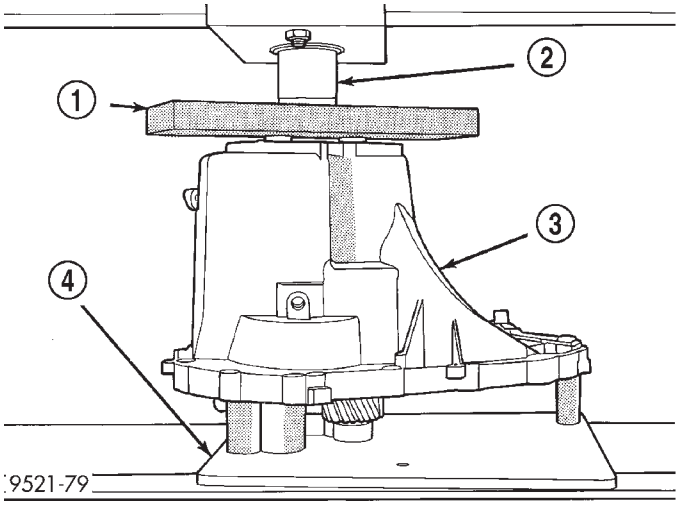

Fig. 72 Pressing Gears Out of Case

1 – BEARING FIXTURE
2 – PRESS RAM
3 – TRANSAXLE CASE
4 – BENCH FIXTURE

DISASSEMBLY AND ASSEMBLY (Continued)

(18) Remove transaxle from press.

(19) Carefully remove transaxle case from the shaft assemblies and bench fixture (Fig. 73). Be sure the oil–feed trough to the end bearings is not damaged (Fig. 74).

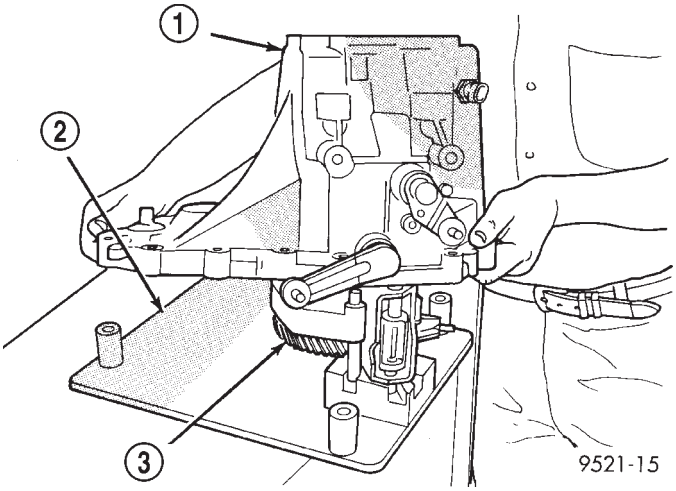

Fig. 73 Transaxle Case Removal

1 – TRANSAXLE CASE
2 – BENCH FIXTURE
3 – GEARTRAIN

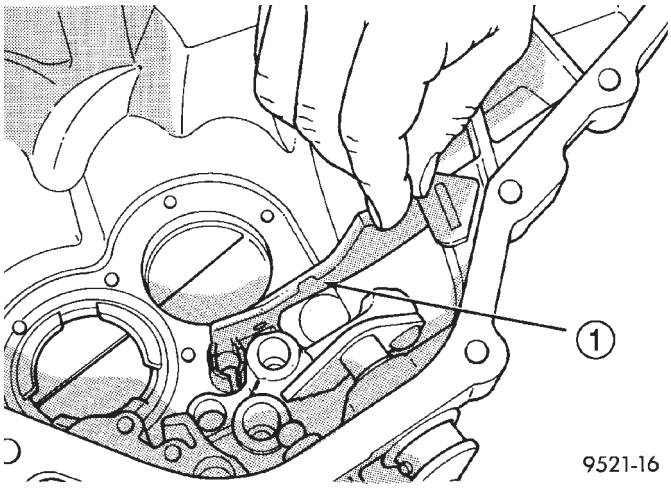

Fig. 74 Oil Feed Trough

1 – OIL FEED TROUGH

(20) **TRANSAXLE W/REVERSE BRAKE:** Remove the reverse brake blocking ring, shim, reverse brake friction cone, bearing and race from the input shaft assembly (Fig. 75) (Fig. 76) (Fig. 77) (Fig. 78) (Fig. 79). **TRANSAXLE W/O REVERSE BRAKE:** Remove plastic spacer from the input shaft assembly.

(21) Remove the shift blocker assembly from the bench fixture (Fig. 80).

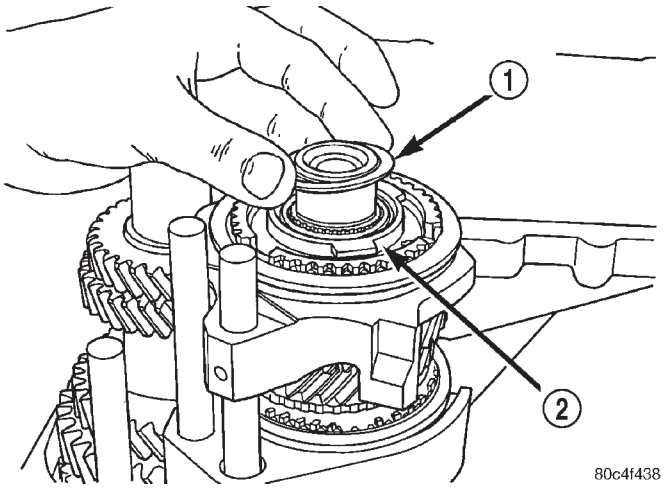

Fig. 75 Reverse Brake Shim

1 – REVERSE BRAKE SHIM
2 – REVERSE BRAKE FRICTION CONE

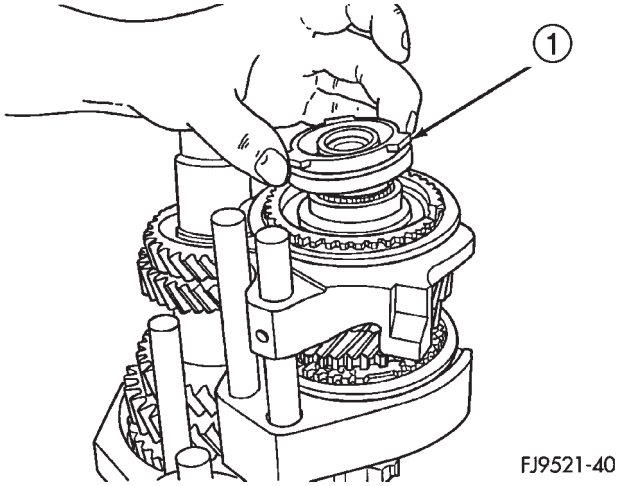

Fig. 76 Reverse Brake Friction Cone

1 – REVERSE BRAKE FRICTION CONE

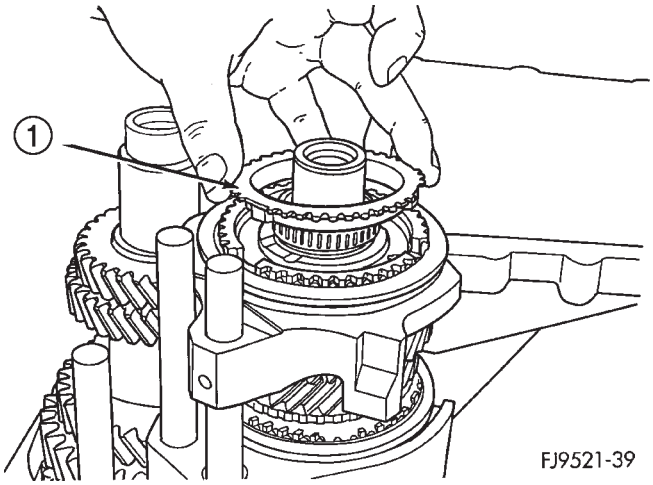

Fig. 77 Reverse Brake Blocking Ring

1 – REVERSE BRAKE BLOCKING RING

DISASSEMBLY AND ASSEMBLY (Continued)

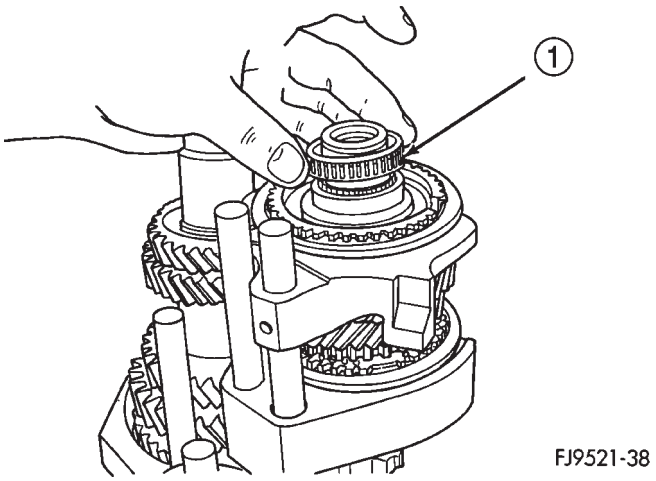

Fig. 78 Reverse Brake Needle Bearing

1 – REVERSE BRAKE NEEDLE BEARING

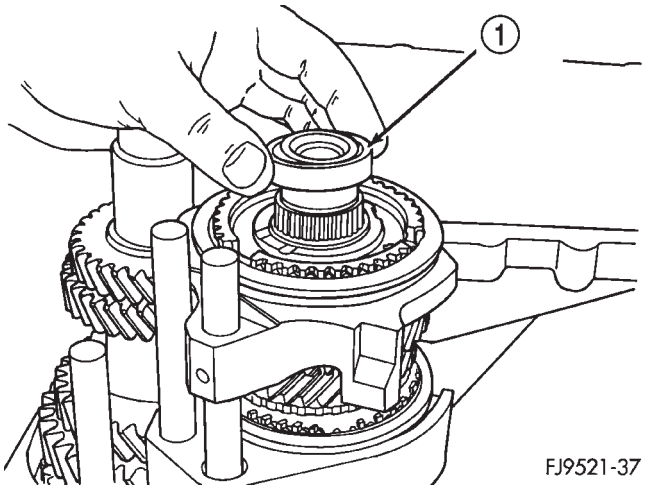

Fig. 79 Reverse Brake Race

1 – REVERSE BRAKE RACE

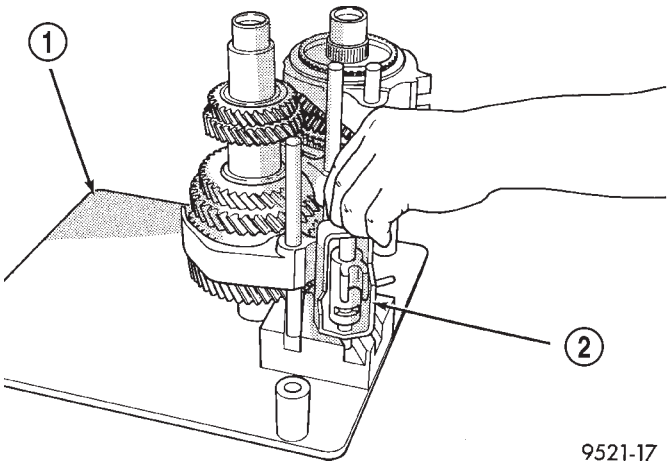

Fig. 80 Shift Blocker Removal

1 – 6785 BENCH FIXTURE
2 – SHIFT BLOCKER ASSEMBLY

(22) Remove the 1-2 shift fork from the output shaft (Fig. 81).

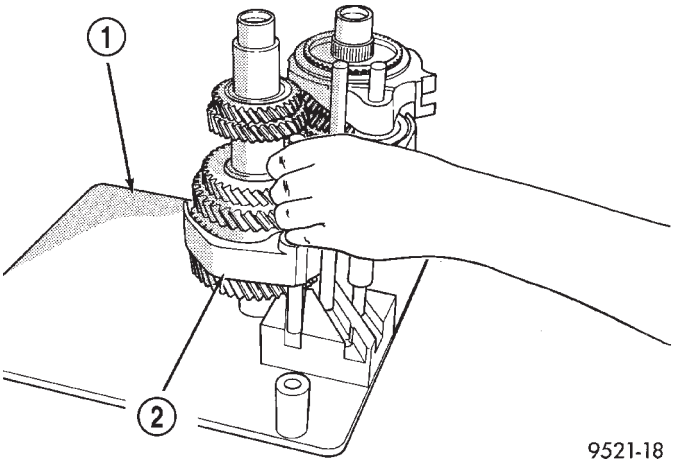

Fig. 81 1–2 Shift Fork Removal

1 – 6785 BENCH FIXTURE
2 – 1–2 SHIFT FORK

(23) Remove input and output shaft assemblies from bench fixture (Fig. 82).

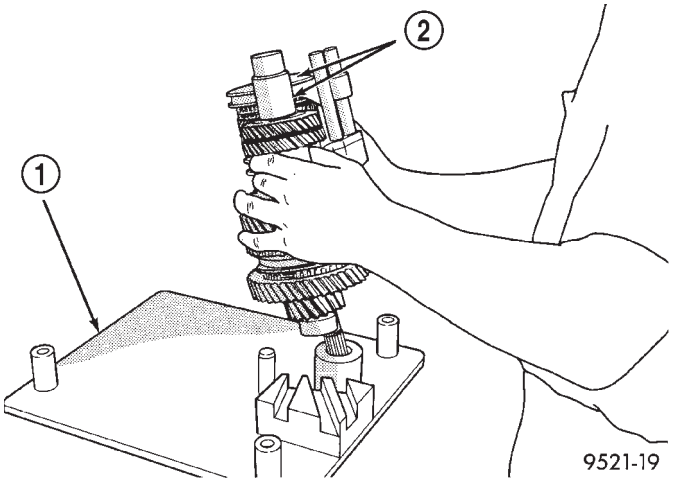

Fig. 82 Gear Train Removal

1 – 6785 BENCH FIXTURE
2 – INPUT AND OUTPUT SHAFTS

CAUTION: The output shaft assembly is serviced as an assembly. Do not try to repair any component on the output shaft. If the 1-2 synchronizer or gear fails, it is necessary to replace the complete output shaft assembly.

ASSEMBLY

The sealant used to seal the transaxle case halves is Mopar® Gasket Maker, Loctite® 518, or equivalent. The sealant used for the bearing end plate cover is Mopar® RTV.

DISASSEMBLY AND ASSEMBLY (Continued)

(1) Verify bench fixture shims are removed from bench fixture. Install output and input shafts into bench fixture (Tool #6785) (Fig. 83).

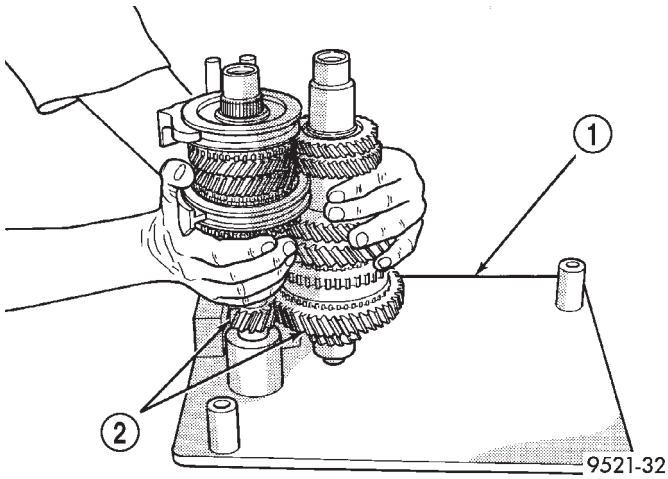

Fig. 83 Bench Fixture

1 – BENCH FIXTURE
2 – GEARTRAIN

(2) Install shift rails and forks into bench fixture (Fig. 84).

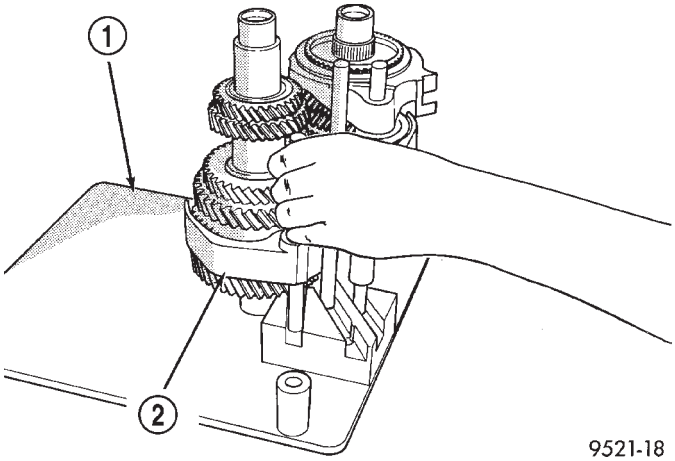

Fig. 84 Shift Rail Installation

1 – 6785 BENCH FIXTURE
2 – 1–2 SHIFT FORK

(3) Install shift blocker assembly into bench fixture (Fig. 85).

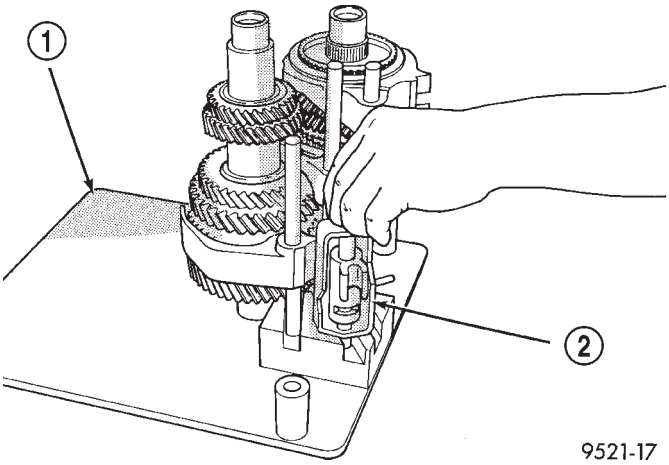

Fig. 85 Shift Blocker Installation

1 – 6785 BENCH FIXTURE
2 – SHIFT BLOCKER ASSEMBLY

(4) Install reverse brake race onto input shaft (Fig. 86).

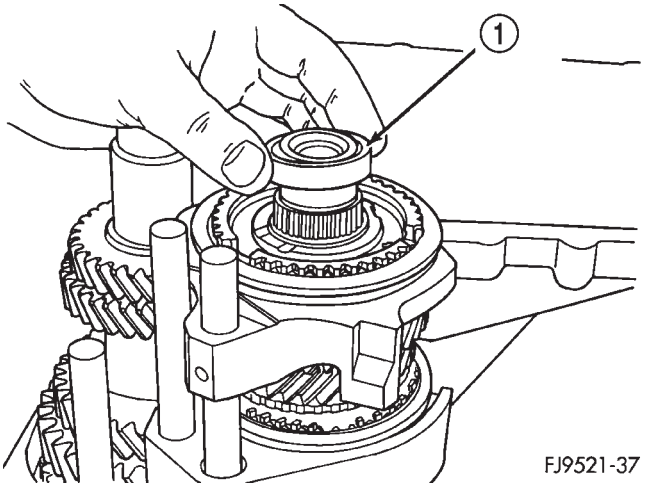

Fig. 86 Reverse Brake Race Installation

1 – REVERSE BRAKE RACE

DISASSEMBLY AND ASSEMBLY (Continued)

(5) Install reverse brake needle bearing (Fig. 87).

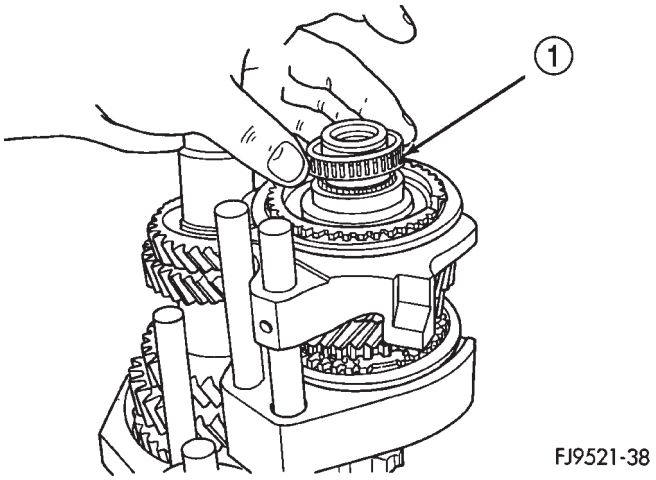

Fig. 87 Reverse Brake Needle Bearing

1 – REVERSE BRAKE NEEDLE BEARING

(6) Install reverse brake blocking ring (Fig. 88).

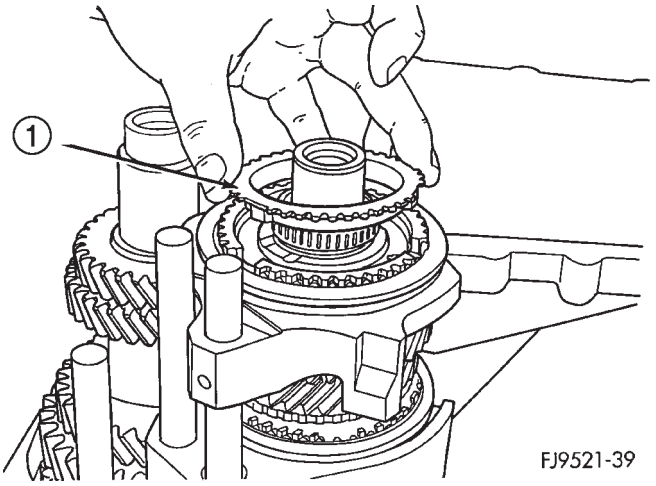

Fig. 88 Reverse Brake Blocking Ring Installation

1 – REVERSE BRAKE BLOCKING RING

(7) Install reverse brake friction cone (Fig. 89).

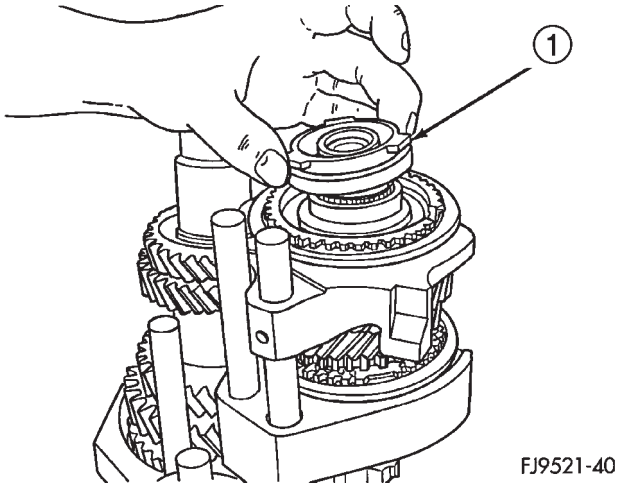

Fig. 89 Reverse Brake Friction Cone Installation

1 – REVERSE BRAKE FRICTION CONE

(8) Install reverse brake shim (Fig. 90). Apply petroleum jelly to shim to hold in place.

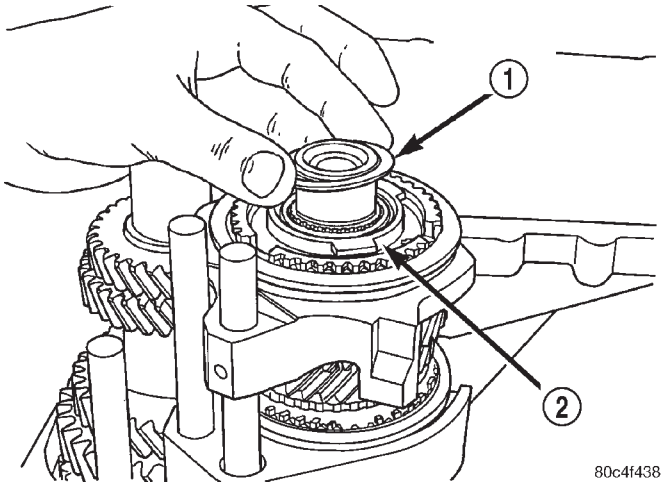

Fig. 90 Reverse Brake Shim

1 – REVERSE BRAKE SHIM
2 – REVERSE BRAKE FRICTION CONE

DISASSEMBLY AND ASSEMBLY (Continued)

(9) Install gear–case half over bench fixture (Fig. 91). Line up shift finger over 3-4 lug.

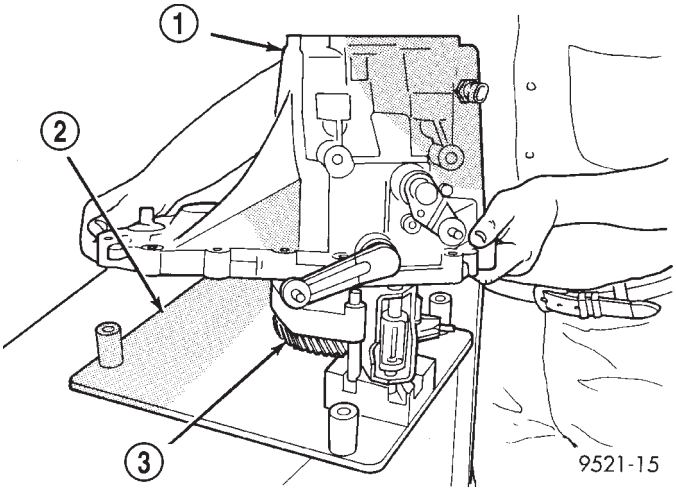

Fig. 91 Gear Case Half

1 – TRANSAXLE CASE
2 – BENCH FIXTURE
3 – GEARTRAIN

(10) Line up reverse brake friction cone lugs to the slots in the gear case (Fig. 92). Verify reverse brake shim is in position.

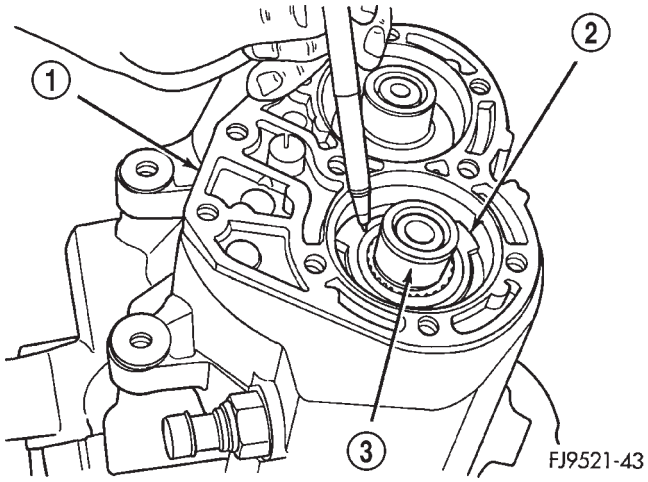

Fig. 92 Friction Cone Lugs

1 – CASE
2 – FRICTION CONE LUGS
3 – INPUT SHAFT

(11) Position input and output bearings on the shafts. Using Miller tool C-4992-1, press on input and output shaft bearings until they bottom into the case and against the shafts (Fig. 93).

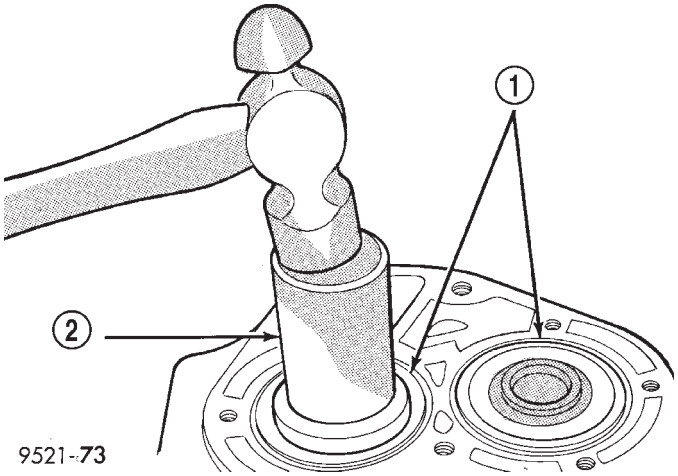

Fig. 93 Installing Input and Output Bearings

1 – INPUT AND OUTPUT BEARINGS
2 – SPECIAL TOOL C-4992-1

(12) Install shaft snap rings at input and output bearings (Fig. 94).

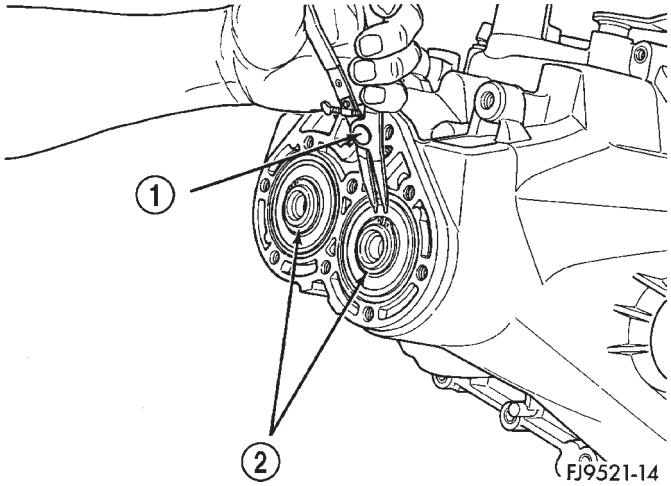

Fig. 94 Snap Rings Retaining Bearings

1 – SNAP RING PLIERS
2 – SNAP RINGS

DISASSEMBLY AND ASSEMBLY (Continued)

(13) Apply Mopar® RTV sealant to end–cover outer edge and around bolt holes. Install end–cover onto gear case. Tighten end cover bolts to 29 N·m (21 ft. lbs.) torque (Fig. 95).

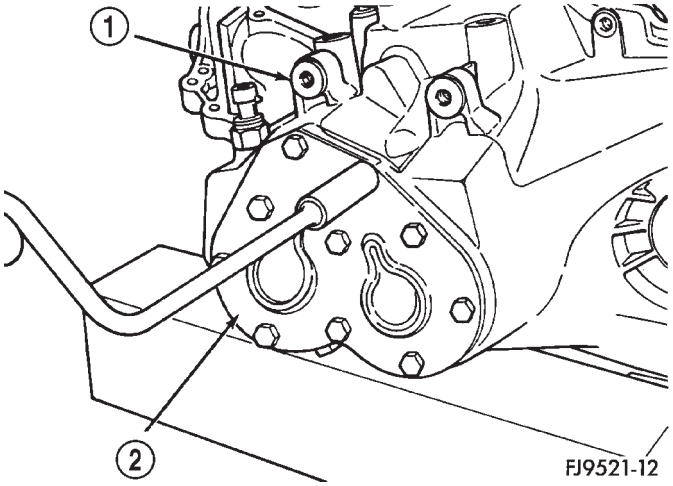

Fig. 95 Transaxle End Cover

1 – TRANSAXLE CASE
2 – END COVER

(14) Remove gear case from bench fixture.

(15) Install gear case in a holding fixture with end cover facing down.

(16) Turn selector shaft into slot on blocker assembly (Fig. 96).

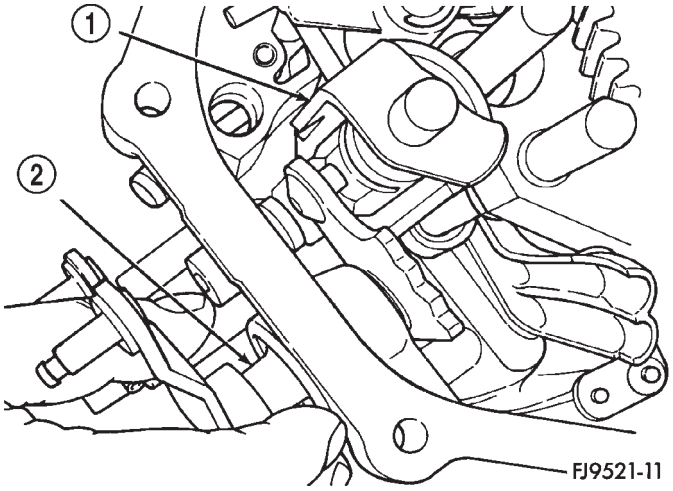

Fig. 96 Selector Shaft

1 – SHIFT ASSEMBLY
2 – SELECTOR SHAFT

(17) Push selector shaft spacer clip onto selector shaft. Install shift levers.

(18) Install reverse idler gear and spacer (Fig. 97).

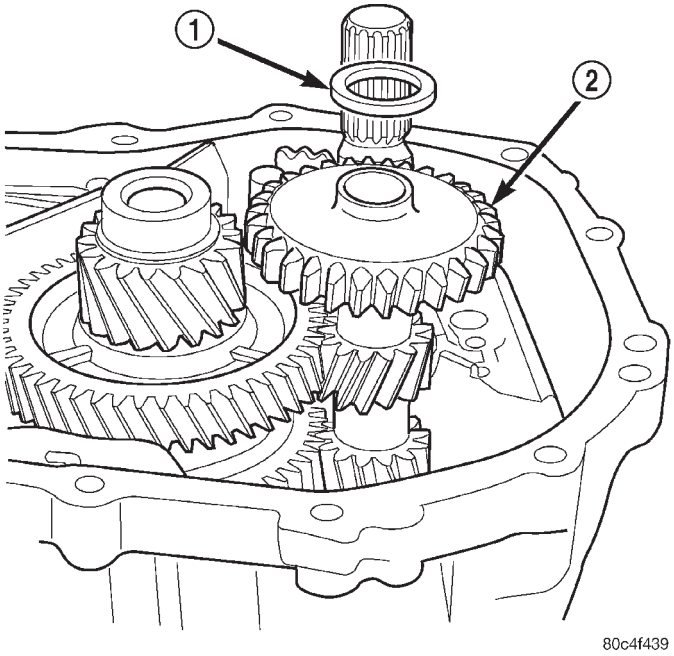

Fig. 97 Reverse Idler Gear and Spacer

1 – SPACER
2 – REVERSE IDLER GEAR

(19) Install reverse idler shaft (Fig. 98).

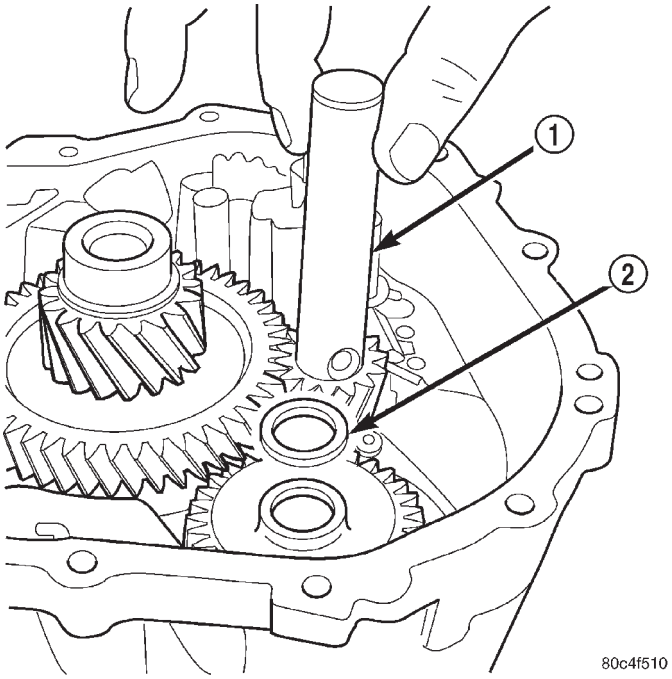

Fig. 98 Reverse Idler Shaft

1 – REVERSE IDLER SHAFT
2 – SPACER

DISASSEMBLY AND ASSEMBLY (Continued)

(20) Install bolt into shaft. Tighten bolt on shaft to 26 N·m (19 ft. lbs.) torque (Fig. 99).

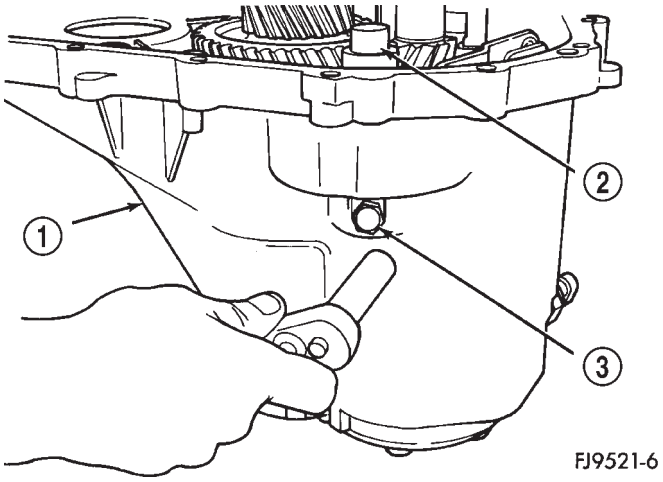

Fig. 99 Reverse Idler Shaft Bolt

1 – CASE
2 – REVERSE IDLER SHAFT
3 – REVERSE IDLER SHAFT BOLT

(21) Install reverse fork bracket and reverse lockout. Tighten screws to 11 N·m (96 in. lbs.) torque (Fig. 100) (Fig. 101).

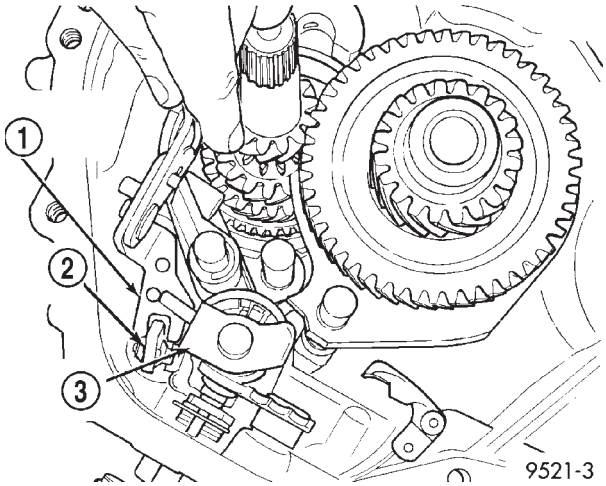

Fig. 100 Reverse Fork Bracket

1 – REVERSE FORK BRACKET
2 – REVERSE CAM BLOCKOUT
3 – SHIFT BLOCKER ASSEMBLY

(22) Install differential into gear case (Fig. 102).

BEARING ADJUSTMENT PROCEDURE

(1) Use extreme care when removing and installing bearing cups and cones. Use only an arbor press for installation, as a hammer may not properly align the bearing cup or cone. Burrs or nicks on the bearing seat gives a false end–play reading while gauging for proper shims. Improperly seated bearing cups and cones are subject to low–mileage failure.

(2) Bearing cups and cones should be replaced if they show signs of pitting or heat distress. If distress is seen on either the cup or bearing rollers, both cup and cone must be replaced.

(3) Bearing preload and drag torque specifications must be maintained to avoid premature bearing failures. Used (original) bearings may lose up to 50% of the original drag torque after break–in. All bearing adjustments must be made with no other component interference or gear intermesh.

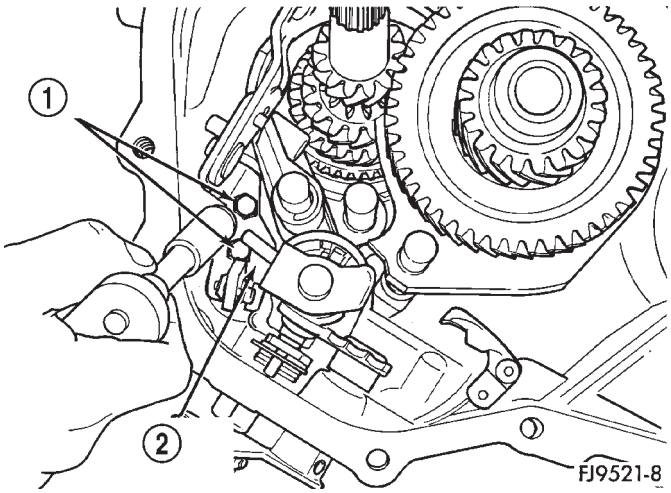

Fig. 101 Reverse Fork Screws

1 – SCREWS (2)
2 – REVERSE FORK BRACKET

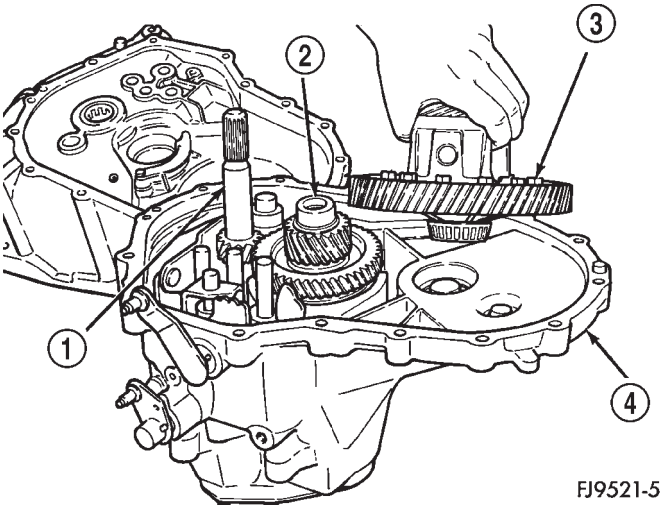

Fig. 102 Differential Assembly

1 – INPUT SHAFT
2 – OUTPUT SHAFT
3 – DIFFERENTIAL
4 – CASE

DISASSEMBLY AND ASSEMBLY (Continued)

(4) Replace bearings as a pair: If one differential bearing is defective, replace both differential bearings, if one input shaft bearing is defective, replace both input shaft bearings.

(5) Bearing cones must not be reused if removed.

(6) Turning–torque readings should be obtained while smoothly rotating in either direction.

DIFFERENTIAL BEARING PRELOAD ADJUSTMENT

NOTE: True bearing turning–torque readings can be obtained only with the geartrain removed from the case.

(1) Remove bearing cup and existing shim from clutch bellhousing case.

(2) Press in new bearing cup into bellhousing case (or use a cup that has been ground down on the outer edge for ease of measurement).

(3) Press in new bearing cup into gear case side.

(4) Oil differential bearings with Mopar® type M.S. 9417 Manual Transaxle Fluid. Install differential assembly in transaxle gear case. Install clutch bellhousing over gear case. Install and torque case bolts to 29 N·m (21 ft. lbs.).

(5) Position transaxle with bellhousing facing down on workbench with C-clamps. Position dial indicator.

(6) Apply a medium load to differential with Tool C-4995 and a T-handle, in the downward direction. Roll differential assembly back and forth a number of times. This will settle the bearings. Zero the dial indicator. To obtain end play readings, apply a medium load in an upward direction while rolling differential assembly back and forth (Fig. 103). Record end play.

(7) The shim required for proper bearing preload is the **total of end play, plus (constant) preload of 0.18mm (0.007 in.).** Never combine shims to obtain the required preload.

(8) Remove case bolts. Remove clutch bellhousing differential bearing cup. Install shim(s) selected in Step 7. Then press the bearing cup into clutch bellhousing.

(9) Install clutch bellhousing. Install and torque case bolts to 26 N·m (19 ft. lbs.).

(10) Using Special Tool C-4995 and an inch-pound torque wrench, check turning torque of the differential assembly (Fig. 104). **The turning torque should be 6 to 12 in. lbs. If the turning torque is too high, install a 0.05mm (0.002 inch) thinner shim. If the turning torque is too low, install a 0.05mm (0.002 inch) thicker shim.**

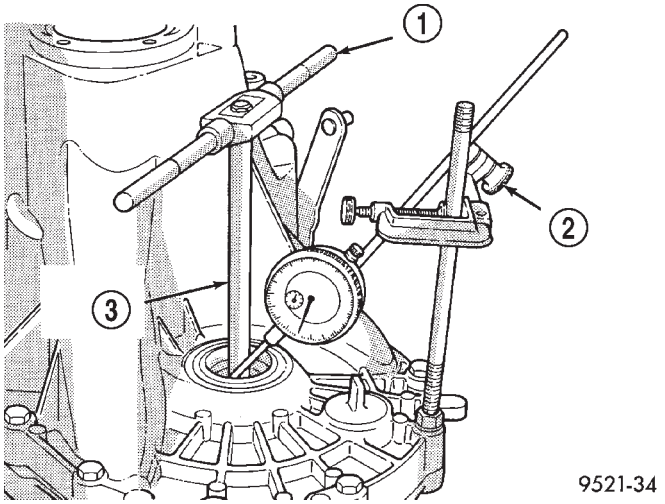

Fig. 103 Checking Differential Bearing End Play To Determine Shim Thickness

1 – T-HANDLE
2 – DIAL INDICATOR SET
3 – SPECIAL TOOL C-4995

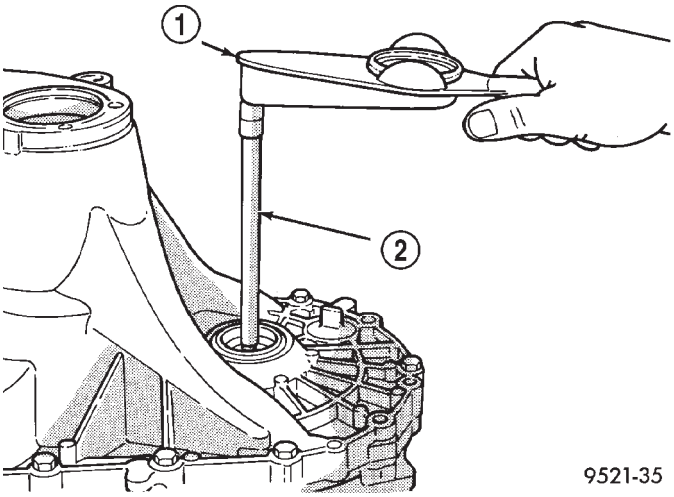

Fig. 104 Checking Differential Bearing Turning Torque

1 – INCH-POUND TORQUE WRENCH
2 – SPECIAL TOOL C-4995

(11) Recheck turning torque. Repeat Step Step 10until the proper turning torque is obtained.

Once proper turning torque has been established, place gear case on the end plate. Draw a bead of Mopar® Gasket Maker, Loctite® 518, or equivalent, on the flat surface of the case mating flange. Install clutch bellhousing onto gear case. Install and tighten case bolts to 29 N·m (21 ft. lbs.).

DISASSEMBLY AND ASSEMBLY (Continued)

INPUT SHAFT

DISASSEMBLY

Before disassembly of the input shaft, it is necessary to check the synchronizer stop ring gap. Use a feeler gauge to measure the gaps between the stop rings and the speed gears. The correct gaps are listed below:

- 1st—0.522-2.208 mm (0.021-0.087 in)
- 2nd—0.522-2.208 mm (0.021-0.087 in)
- 3rd—0.73-1.53 mm (0.029-0.060 in)
- 4th—0.77-1.57 mm (0.030-0.062 in).
- 5th—0.73-1.53 mm (0.029-0.060 in)

If a stop ring gap does not fall within the specifications, it must be inspected for wear and replaced. If the 1st or 2nd synchronizer stop ring is worn beyond specifications, the complete output shaft assembly must be replaced.

The input shaft incorporates the 3rd, 4th, and 5th speed gears and synchronizers on the assembly (Fig. 105).

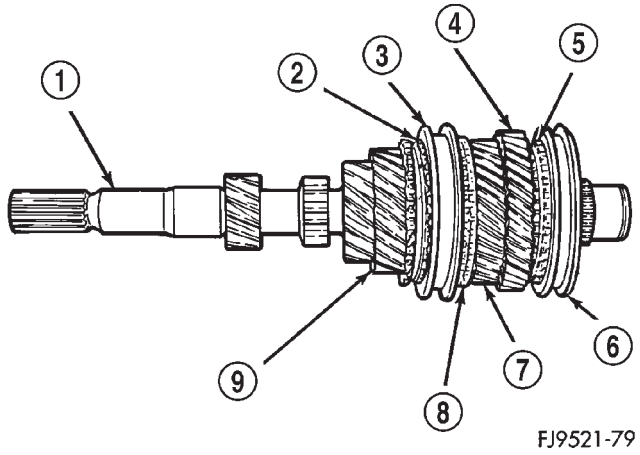

Fig. 105 Input Shaft

1 – INPUT SHAFT
2 – STOP RING
3 – SLEEVE
4 – 5TH SPEED GEAR
5 – STOP RING
6 – SLEEVE
7 – 4TH SPEED GEAR
8 – STOP RING
9 – 3RD SPEED GEAR

(1) Install bearing splitter behind 5th speed gear. Remove snap ring at 5th synchronizer hub on input shaft (Fig. 106).

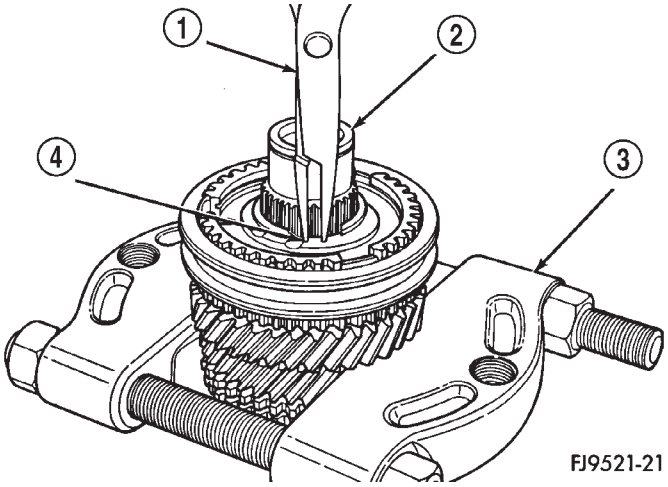

Fig. 106 5th Synchro and Hub Snap Ring Removal

1 – SNAP RING PLIERS
2 – INPUT SHAFT
3 – BEARING SPLITTER
4 – SNAP RING

(2) Remove synchronizer and gear using shop press (Fig. 107).

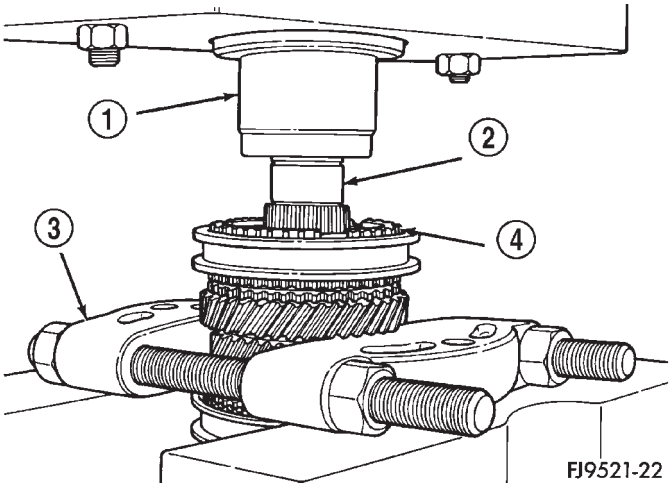

Fig. 107 Remove Synchronizer Using Shop Press

1 – PRESS RAM
2 – INPUT SHAFT
3 – BEARING SPLITTER
4 – SYNCHRONIZER ASSEMBLY

DISASSEMBLY AND ASSEMBLY (Continued)

(3) Remove caged needle bearing (Fig. 108).

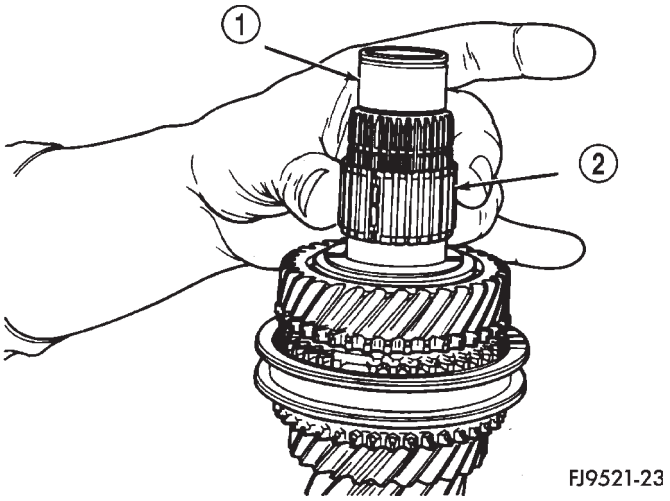

Fig. 108 Caged Needle Bearing Removal

1 – INPUT SHAFT
2 – CAGED NEEDLE BEARING

(4) Remove 4-5 gears split thrust washer ring (Fig. 109).

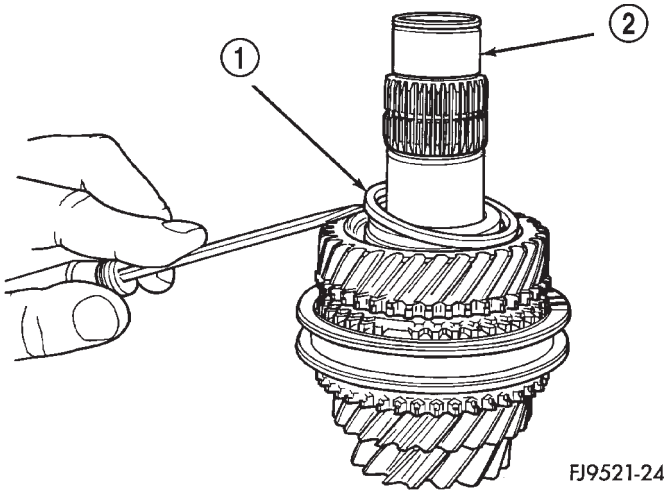

Fig. 109 Split Thrust Washer Ring Removal

1 – SPLIT THRUST WASHER RING
2 – INPUT SHAFT

(5) Remove split thrust washer (Fig. 110).

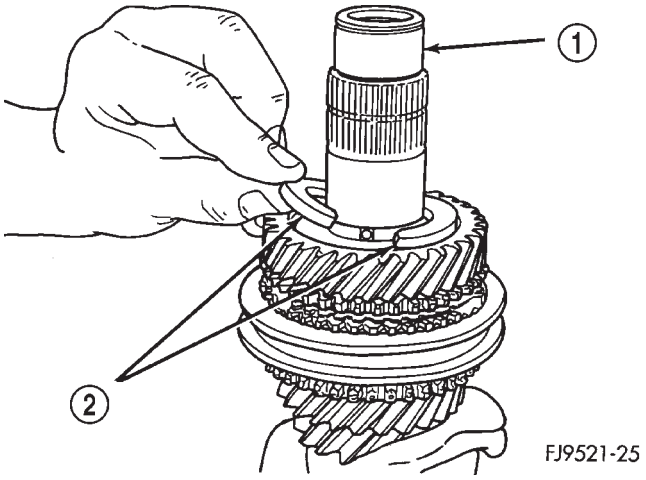

Fig. 110 Split Thrust Washer Removal

1 – INPUT SHAFT
2 – SPLIT THRUST WASHER

(6) Remove split thrust washer separation pin (Fig. 111).

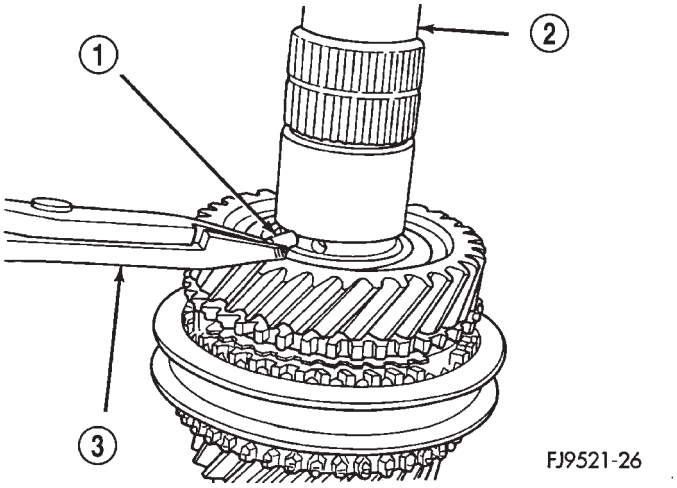

Fig. 111 Split Thrust Washer Separation Pin

1 – SEPARATION PIN
2 – INPUT SHAFT
3 – PLIERS

DISASSEMBLY AND ASSEMBLY (Continued)

(7) Remove 4th gear (Fig. 112).

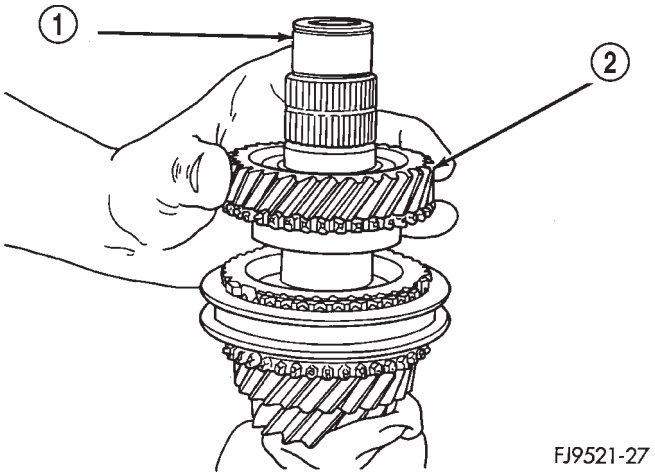

Fig. 112 4th Gear Removal

1 – INPUT SHAFT
2 – 4TH GEAR

(8) Remove 4th gear caged needle bearing (Fig. 113). Check the caged needle bearing for a broken retention spring.

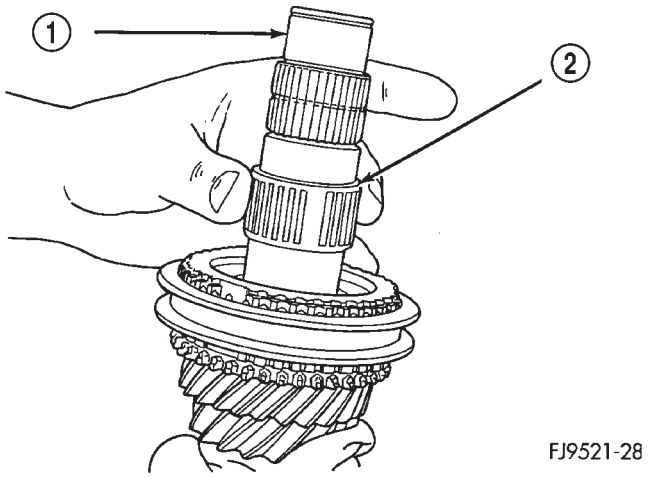

Fig. 113 Caged Needle Bearing Removal

1 – INPUT SHAFT
2 – CAGED NEEDLE BEARING

(9) Remove blocking ring. Remove 3-4 synchronizer hub retaining snap ring (Fig. 114).

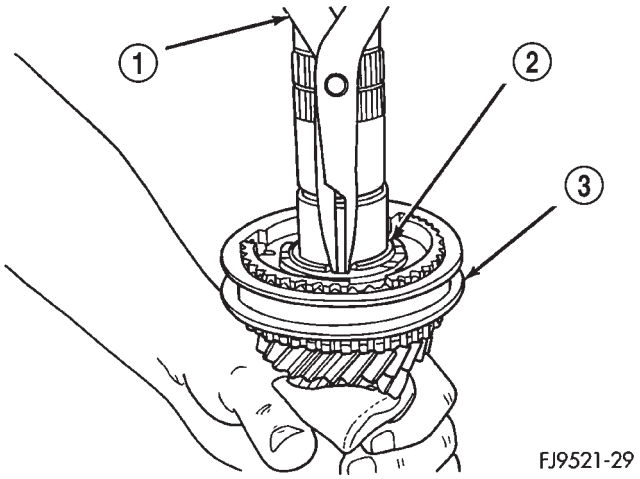

Fig. 114 3-4 Synchronizer Hub Snap Ring

1 – SNAP RING PLIERS
2 – SYNCHRO SNAP RING
3 – SYNCHRONIZER ASSEMBLY

(10) Install input shaft in shop press. Using bearing splitter, remove 3-4 synchronizer and 3rd gear (Fig. 115).

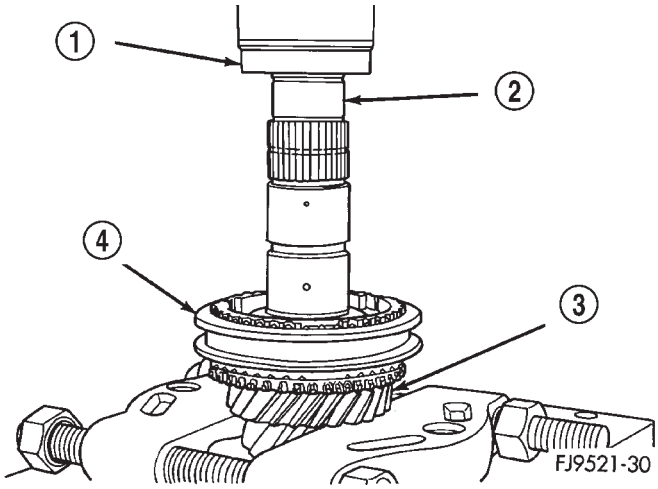

Fig. 115 3rd Gear Removal

1 – PRESS RAM
2 – INPUT SHAFT
3 – 3RD GEAR
4 – SYNCHRONIZER ASSEMBLY

(11) Inspect the input shaft for worn or damaged bearing races or chipped gear teeth. Replace as necessary.

DISASSEMBLY AND ASSEMBLY (Continued)

ASSEMBLY

The snap rings that are used on the input shaft are available in select fit sizes. Use the thickest snap ring that fits in each snap ring groove.

(1) Place input shaft into shop press.

(2) Install 3rd gear and 3-4 synchronizer onto input shaft. Install Tool #C-3717 over input shaft and press on synchronizer hub and 3rd gear (Fig. 116). The synchronizer hub has the letter **U** stamped on the top face of the hub. This designates that the hub must be installed with the **U** facing upward.

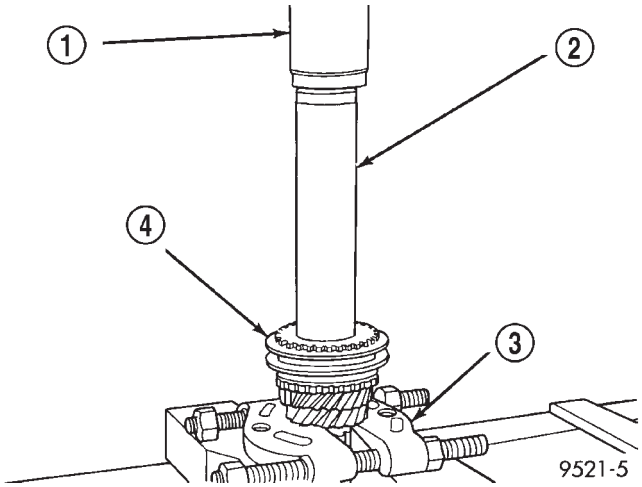

Fig. 116 Press On 3rd Gear Synchronizer Hub

1 – PRESS RAM
2 – SPECIAL TOOL C-3717
3 – BEARING SPLITTER
4 – 3RD GEAR SYNCHRONIZER ASSEMBLY

(3) Install 3-4 synchronizer snap ring into slot on input shaft.

(4) Install blocking ring into 3-4 synchronizer. Install 4th gear caged needle bearing.

(5) Install 4th gear onto input shaft.

(6) Install 4-5 split thrust washer separation pin (Fig. 117).

(7) Install split thrust washer onto input shaft (Fig. 118).

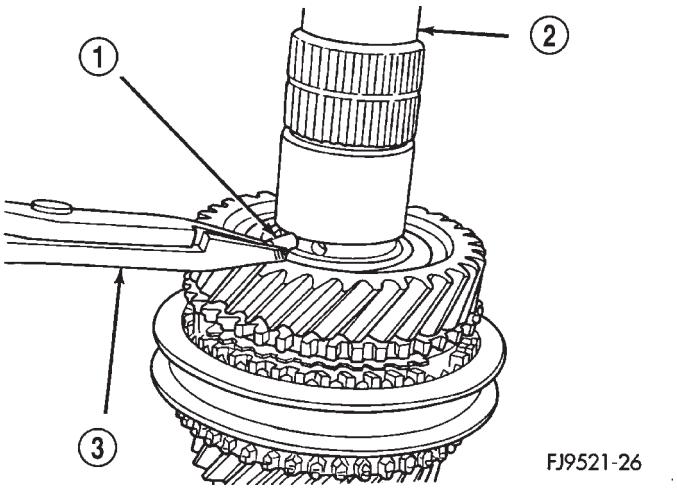

Fig. 117 Split Thrust Washer Separation Pin Installation

1 – SEPARATION PIN
2 – INPUT SHAFT
3 – PLIERS

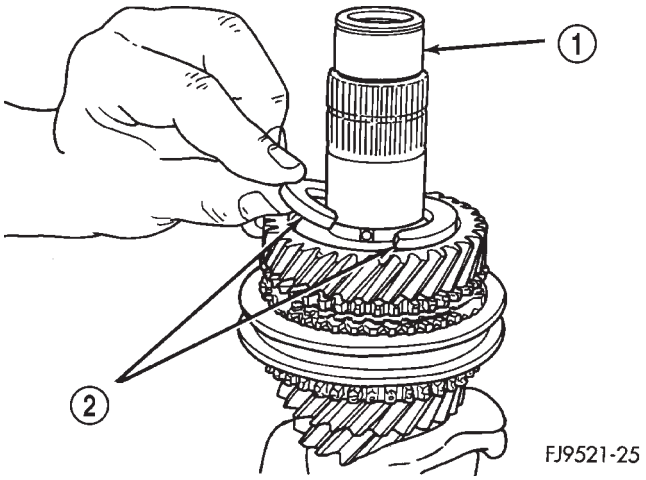

Fig. 118 Split Thrust Washer Installation

1 – INPUT SHAFT
2 – SPLIT THRUST WASHER

DISASSEMBLY AND ASSEMBLY (Continued)

(8) Install split thrust washer retaining ring (Fig. 119).

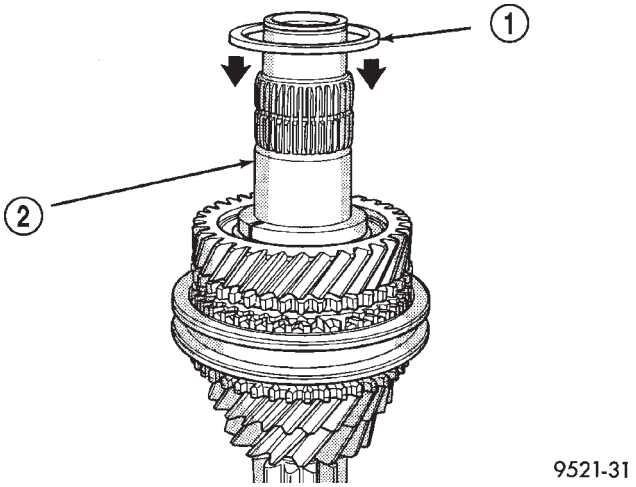

Fig. 119 Retaining Ring Installation

1 – SPLIT THRUST WASHER RING
2 – INPUT SHAFT

(9) Install 5th gear caged needle bearing (Fig. 120).

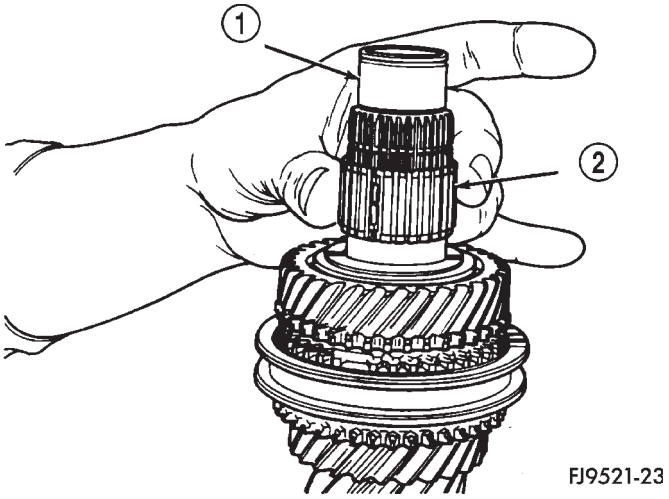

Fig. 120 Caged Needle Bearing Installation

1 – INPUT SHAFT
2 – CAGED NEEDLE BEARING

(10) Using special tool #C-3717, install 5th speed gear and synchronizer (Fig. 121). The 5th gear synchronizer hub has the letter **S** stamped on the top face of the hub. This designates that the hub must be installed with the **S** facing upward.

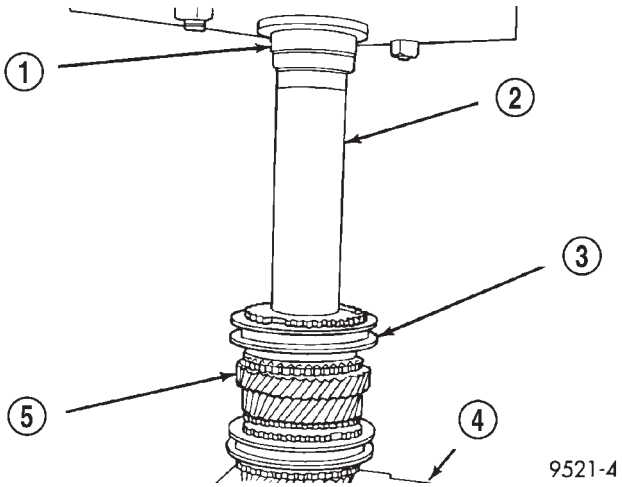

Fig. 121 5th Speed Gear Installation

1 – PRESS RAM
2 – SPECIAL TOOL C-3717
3 – SYNCHRONIZER ASSEMBLY
4 – BEARING SPLITTER
5 – 5TH SPEED GEAR

(11) Install 5th gear synchronizer snap ring (Fig. 122).

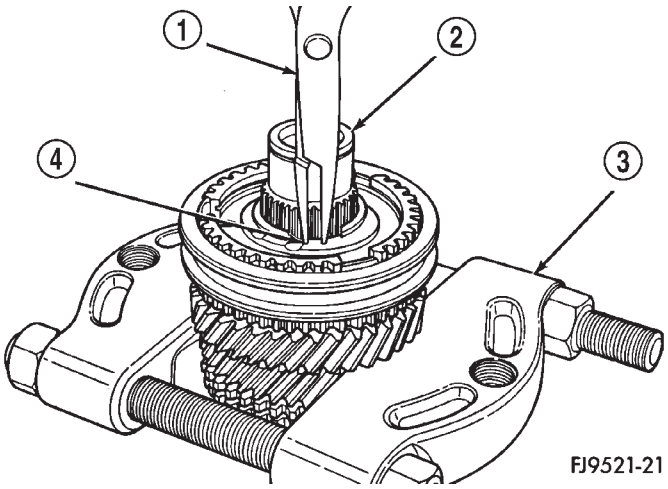

Fig. 122 5th Gear Synchronizer Snap Ring Installation

1 – SNAP RING PLIERS
2 – INPUT SHAFT
3 – BEARING SPLITTER
4 – SNAP RING

DISASSEMBLY AND ASSEMBLY (Continued)

OUTPUT SHAFT

CAUTION: The output shaft is serviced as an assembly. Do not try to repair any component on the output shaft. If the 1-2 synchronizer or gear fails, it is necessary to replace the output shaft assembly.

It is necessary to check the synchronizer stop ring gap. Use a feeler gauge to measure the gaps between the stop rings and the speed gears. The correct gaps are listed below:

- 1st—0.522-2.208 mm (0.021-0.087 in)
- 2nd—0.522-2.208 mm (0.021-0.087 in)
- 3rd—0.73-1.53 mm (0.029-0.060 in)
- 4th—0.77-1.57 mm (0.030-0.062 in)
- 5th—0.73-1.53 mm (0.029-0.060 in)

If a stop ring gap does not fall within the specifications it must be inspected for wear and replaced. If the 1st or 2nd synchronizer stop ring is worn beyond specifications, the complete output shaft assembly must be replaced.

The output shaft incorporates the 1st and 2nd gears and synchronizers on the assembly (Fig. 123).

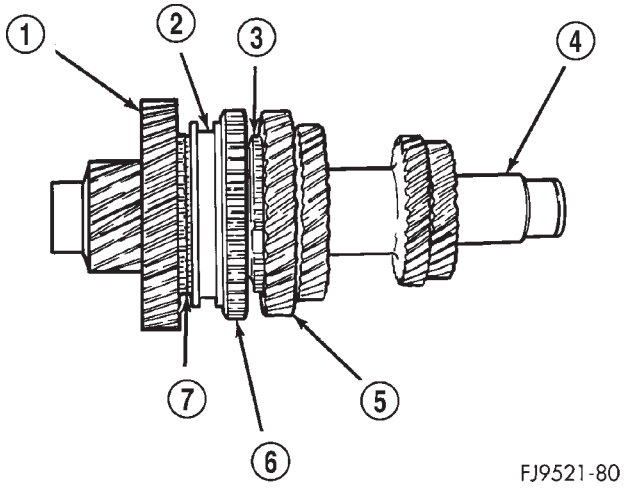

Fig. 123 Output Shaft

1 – 1ST GEAR
2 – SLEEVE
3 – STOP RING
4 – OUTPUT SHAFT
5 – 2ND SPEED GEAR
6 – REVERSE GEAR
7 – STOP RING

DIFFERENTIAL

Shim thickness need be determined only if any of the following parts are replaced:

- Transaxle gear case
- Clutch bellhousing case
- Differential case
- Differential bearings

Refer to **Bearing Adjustment Procedure** in the Adjustments section at the end of this section to determine proper shim thickness. This will provide correct bearing preload and proper bearing turning torque.

DIFFERENTIAL BEARINGS

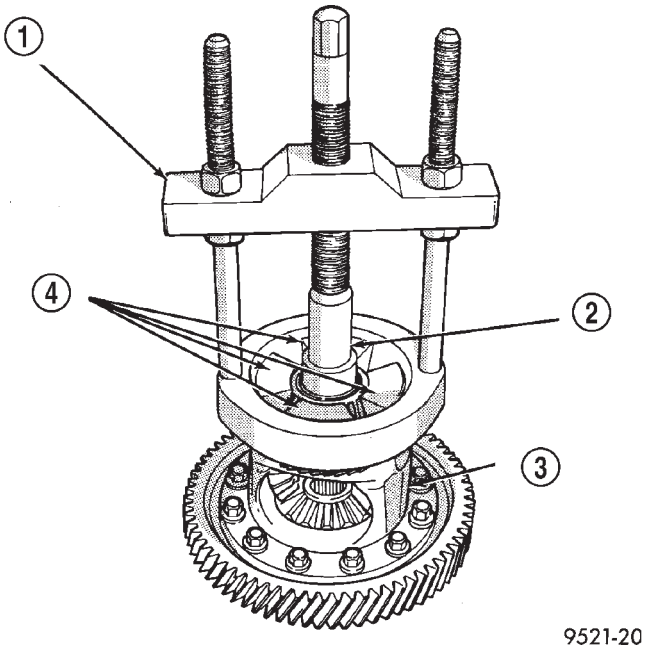

Fig. 124 Remove Differential Bearing Cone

1 – SPECIAL TOOL C-293-PA
2 – SPECIAL TOOL C-4996
3 – DIFFERENTIAL ASSEMBLY
4 – SPECIAL TOOL C-293-45

RING GEAR

CAUTION: Always install new ring gear bolts. Tighten ring gear bolts to 81 N·m (60 ft. lbs.) torque.

SPEEDOMETER DRIVE GEAR

NOTE: The plastic speedometer drive gear must be removed from the differential case in order to service the differential gears

DISASSEMBLY AND ASSEMBLY (Continued)

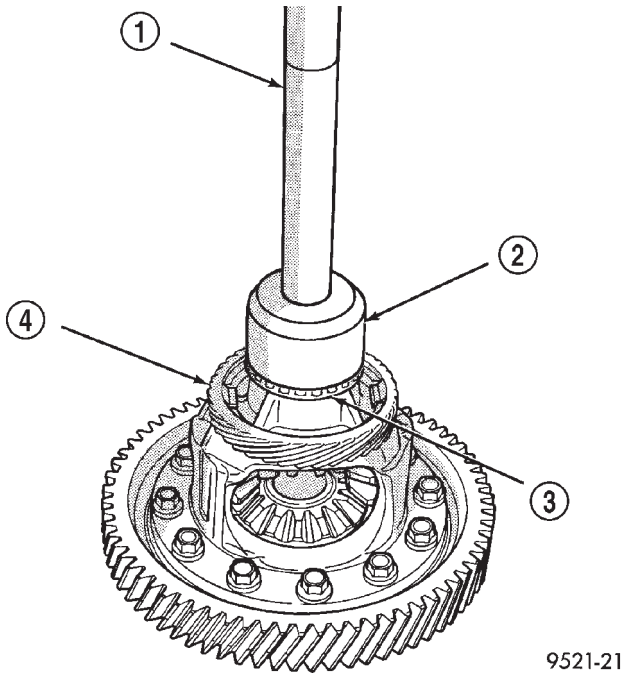

Fig. 125 Install Differential Bearing Cone

1 – SPECIAL TOOL C-4171
2 – SPECIAL TOOL L-4410
3 – BEARING CONE
4 – SPEED SENSOR DRIVE GEAR

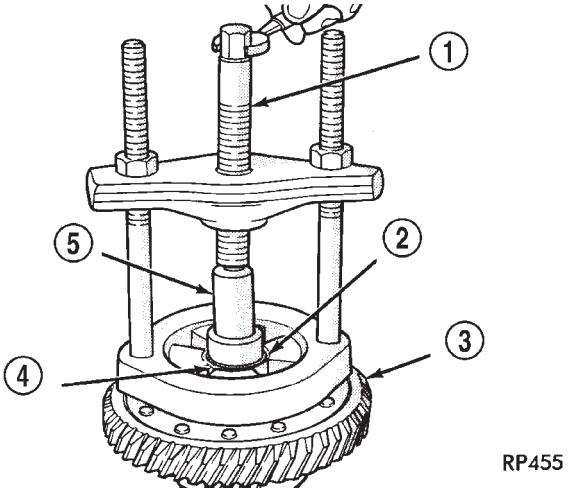

Fig. 126 Remove Differential Bearing Cone

1 – SPECIAL TOOL C-293
2 – SPECIAL TOOL ADAPTER C-293-45 (USE 4 PIECES)
3 – DIFFERENTIAL ASSEMBLY
4 – DIFFERENTIAL BEARING CONE
5 – SPECIAL TOOL C-4996 (NOTE POSITION)

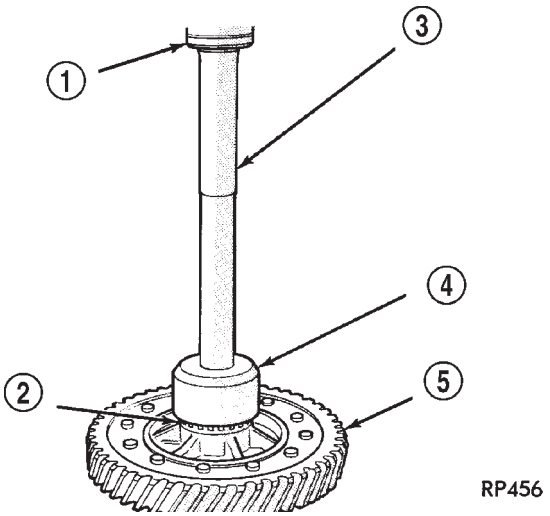

Fig. 127 Install Differential Bearing Cone

1 – ARBOR PRESS RAM
2 – BEARING CONE
3 – SPECIAL TOOL HANDLE C-4171
4 – SPECIAL TOOL L-4410
5 – DIFFERENTIAL ASSEMBLY

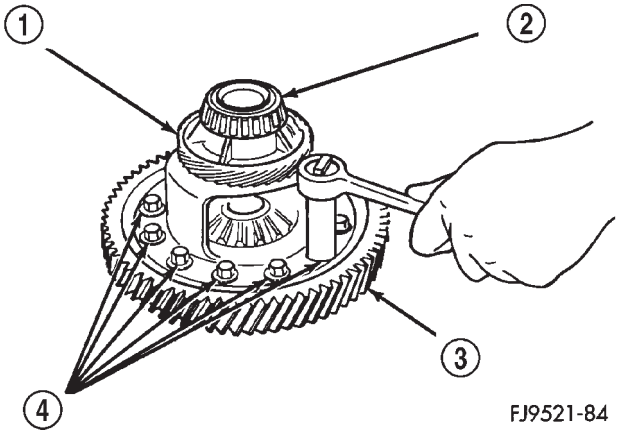

Fig. 128 Remove or Install Ring Gear Bolts and Ring Gear

1 – SPEEDOMETER DRIVE GEAR
2 – BEARING
3 – RING GEAR
4 – RING GEAR BOLTS

DISASSEMBLY AND ASSEMBLY (Continued)

REMOVAL

(1) Pry the plastic speedometer drive gear off of the differential case using a flat blade pry tool (Fig. 129) (Fig. 130).

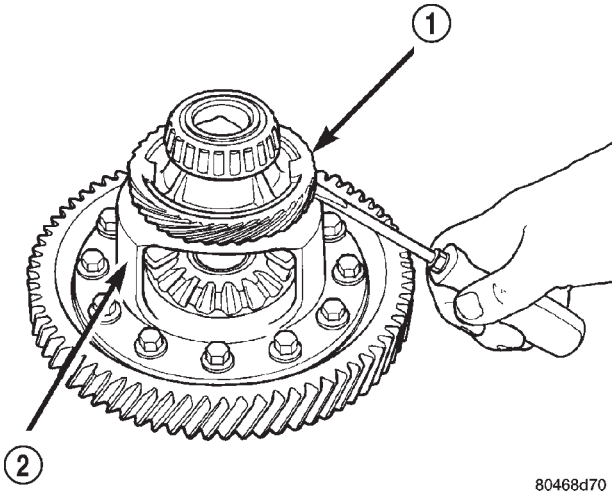

Fig. 129 Pry Off Speedometer Drive Gear

1 – SPEEDOMETER DRIVE GEAR
2 – DIFFERENTIAL ASSEMBLY

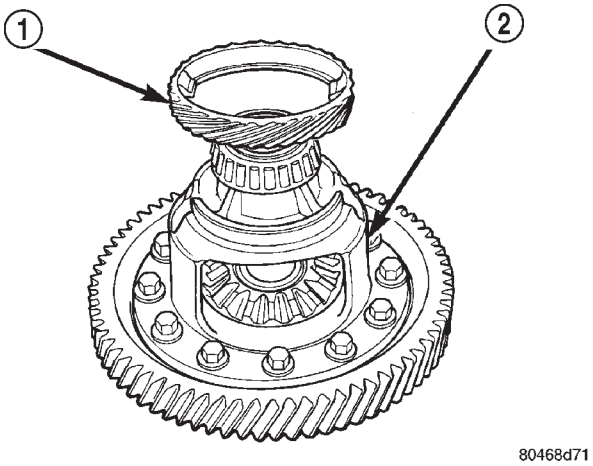

Fig. 130 Speedometer Drive Gear Removed

1 – SPEEDOMETER DRIVE GEAR
2 – DIFFERENTIAL ASSEMBLY

INSTALLATION

NOTE: A new speedometer drive gear must be installed on differential assembly. The lip on the speedometer drive gear must be positioned downward when installing onto differential assembly.

(1) Position speedometer drive gear onto differential assembly (Fig. 131).

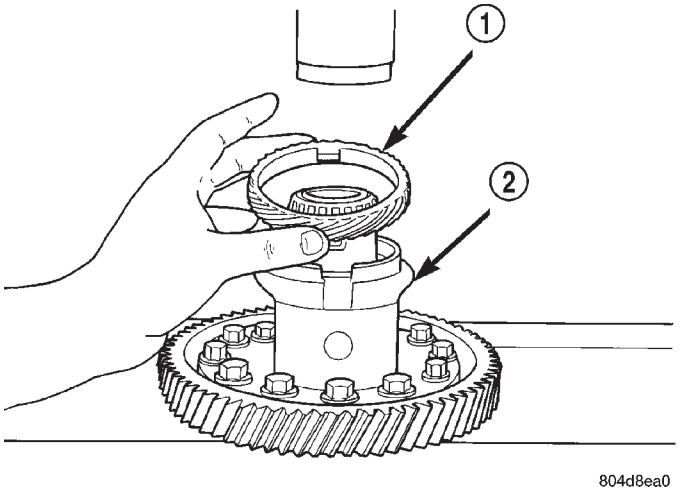

Fig. 131 Speedometer Drive Gear

1 – SPEEDOMETER DRIVE GEAR
2 – DIFFERENTIAL ASSEMBLY

(2) Using Miller Tool # L-4440 and steel stock, press speedometer drive gear onto differential (Fig. 132) (Fig. 133). Do not use a hammer.

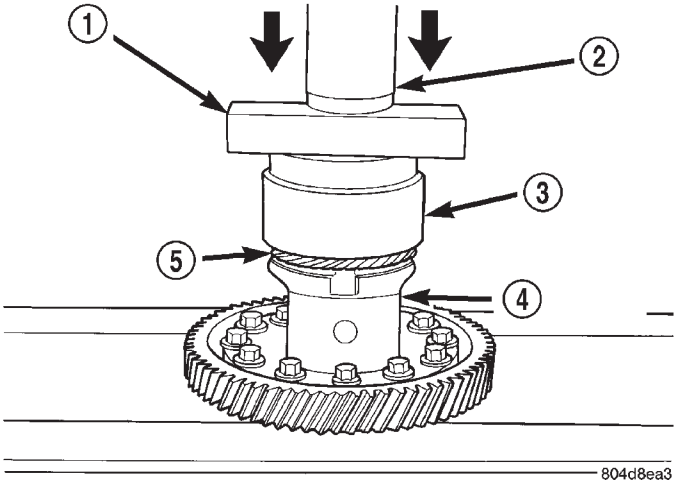

Fig. 132 Press Gear onto Diferential

1 – STEEL STOCK
2 – PRESS RAM
3 – SPECIAL TOOL L-4440
4 – DIFFERENTIAL ASSEMBLY
5 – SPEEDOMETER DRIVE GEAR

DISASSEMBLY AND ASSEMBLY (Continued)

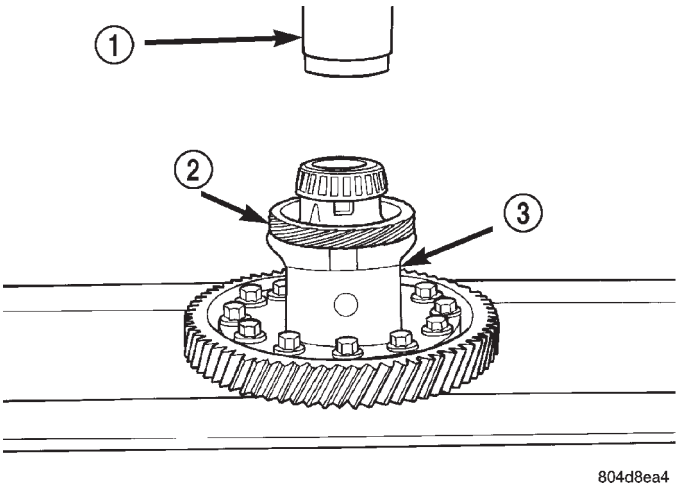

Fig. 133 Drive Gear Pressed onto Differential

1 – PRESS RAM
2 – SPEEDOMETER DRIVE GEAR
3 – DIFFERENTIAL ASSEMBLY

DIFFERENTIAL GEARS

NOTE: The plastic speedometer drive gear must be removed from the differential case in order to service the differential gears. Refer to Speedometer Drive Gear for service information.

REMOVAL

(1) Remove pinion shaft retaining pin (Fig. 134) (Fig. 135).

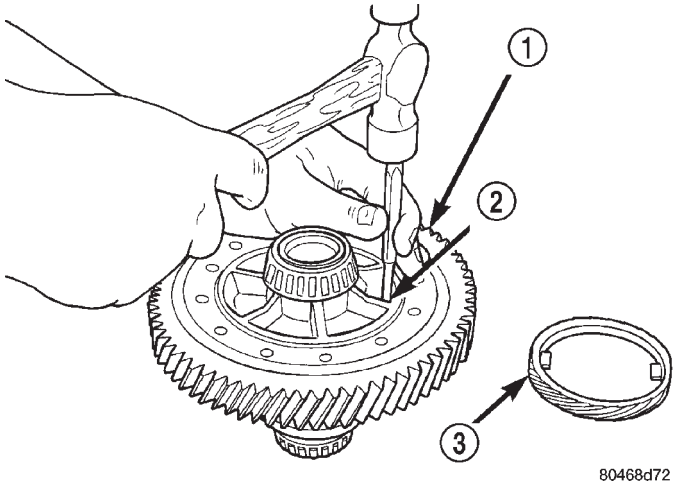

Fig. 134 Remove Pinion Shaft Retaining Pin

1 – RING GEAR
2 – PINION SHAFT RETAINING PIN
3 – SPEEDOMETER DRIVE GEAR

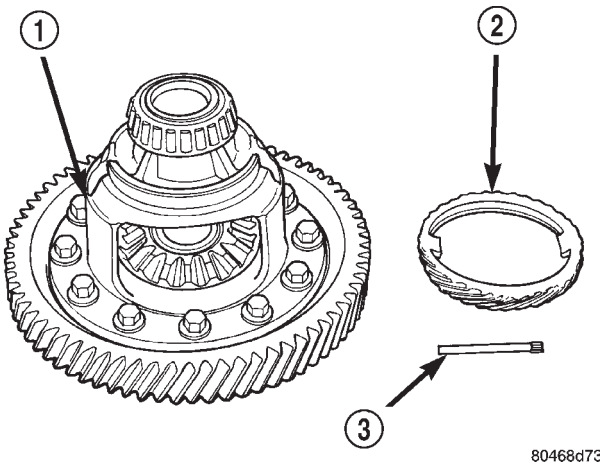

Fig. 135 Retaining Pin Removed

1 – DIFFERENTIAL ASSEMBLY
2 – SPEEDOMETER DRIVE GEAR
3 – PINION SHAFT RETAINING PIN

(2) Remove pinion shaft (Fig. 136).

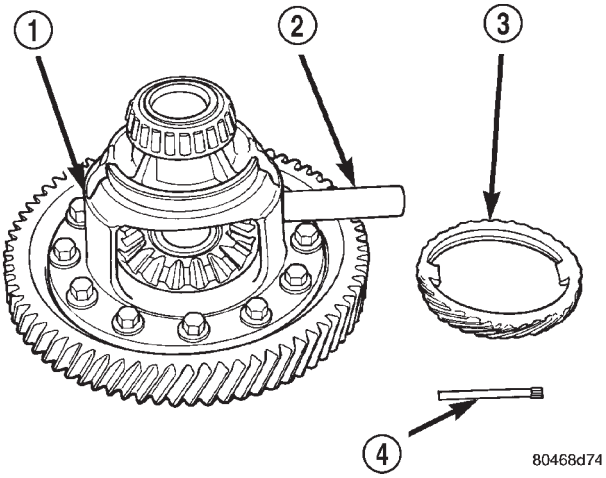

Fig. 136 Pinion Shaft Removal

1 – DIFFERENTIAL ASSEMBLY
2 – PINION SHAFT
3 – SPEEDOMETER DRIVE GEAR
4 – PINION SHAFT RETAINING PIN

(3) Rotate side gears to opening in differential (Fig. 137).

(4) Remove differential gears (Fig. 138).

DISASSEMBLY AND ASSEMBLY (Continued)

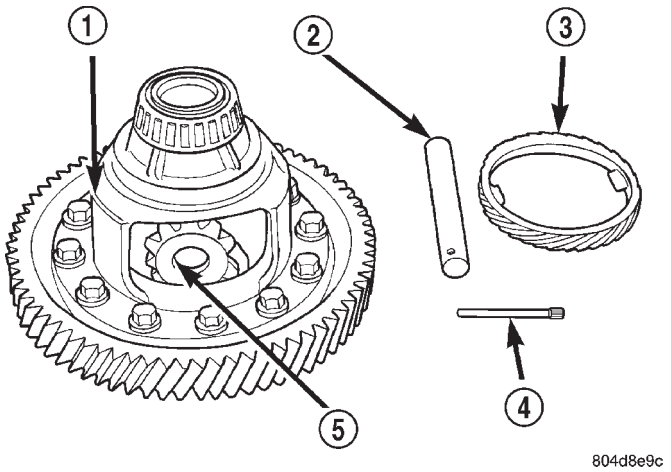

Fig. 137 Remove Pinion Gears, Side Gears, and Thrust Washers by Rotating Side Gears to Opening in Case

1 – DIFFERENTIAL ASSEMBLY
2 – PINION SHAFT
3 – SPEEDOMETER DRIVE GEAR
4 – PINION SHAFT RETAINING PIN
5 – PINION GEAR (2)

INSTALLATION

(1) Assemble the differential side gears, pinion gears and pinion gears with the pinion gear washers.

(2) Install pinion shaft retaining pin (Fig. 139).

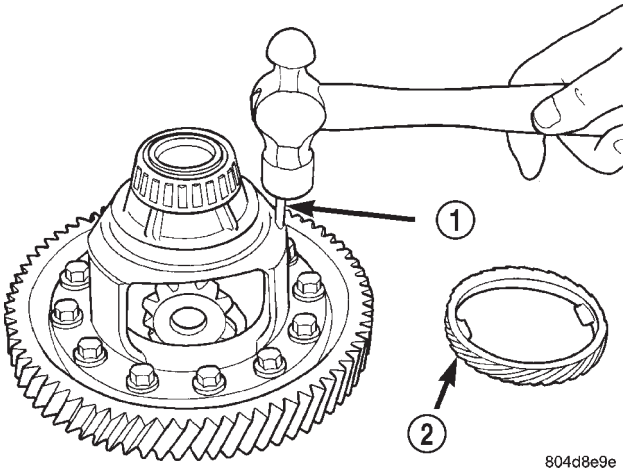

Fig. 139 Install Retaining Pin

1 – PINION SHAFT RETAINING PIN
2 – SPEEDOMETER DRIVE GEAR

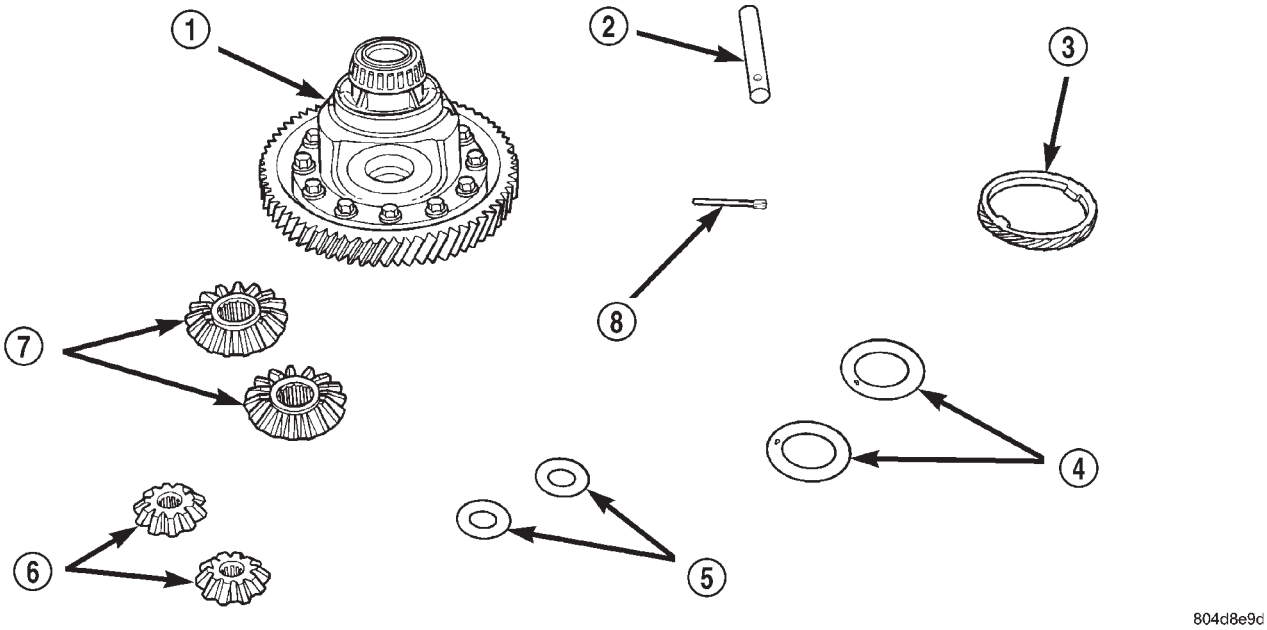

Fig. 138 Differential Gears

1 – DIFFERENTIAL ASSEMBLY
2 – PINION SHAFT
3 – SPEEDOMETER DRIVE GEAR
4 – SIDE GEAR THRUST WASHERS (SELECT THICKNESS)
5 – PINION GEAR THRUST WASHERS
6 – PINION GEARS
7 – SIDE GEARS
8 – PINION SHAFT RETAINING PIN

DISASSEMBLY AND ASSEMBLY (Continued)

(3) Stake pinion shaft retaining pin with a suitable chisel (Fig. 140).

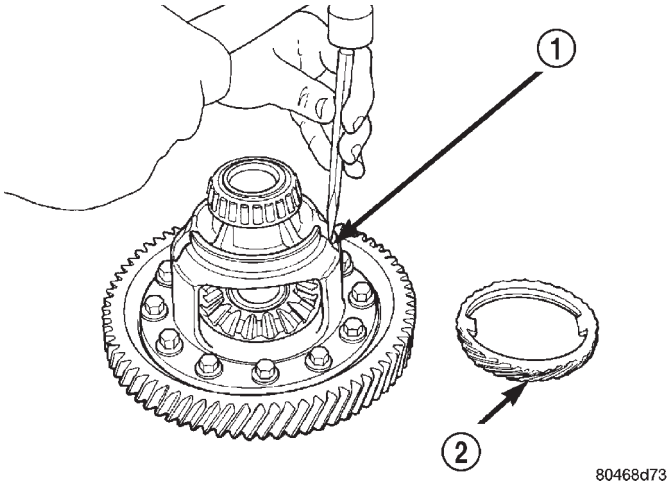

Fig. 140 Staking Retaining Pin

1 – PINION SHAFT RETAINING PIN
2 – SPEEDOMETER DRIVE GEAR

(4) Rotate the assembly two full revolutions both clockwise and counterclockwise.

(4) Set up dial indicator as shown and record end play (Fig. 141) (Fig. 142). Rotate side gear 90 degrees and record another end play. Again, rotate side gear 90 degrees and record a final end play.

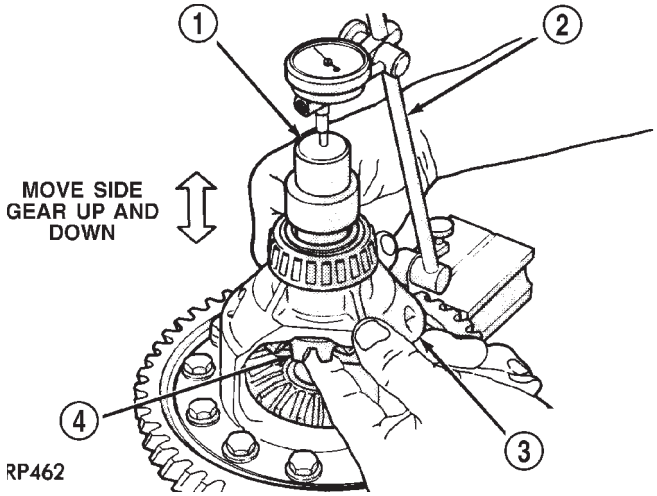

Fig. 141 Checking Side Gear End Play (Typical)

1 – SPECIAL TOOL C-4996 (NOTE POSITION)
2 – DIAL INDICATOR SET
3 – DIFFERENTIAL ASSEMBLY
4 – SIDE GEAR

(5) Using the smallest end play recorded, shim that side gear to within 0.001 to 0.013 inch. The other side gear should be checked using the same procedure.

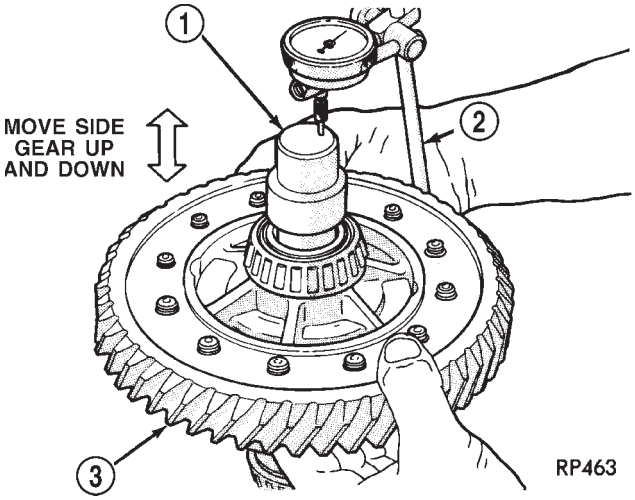

Fig. 142 Checking Side Gear End Play (Typical)

1 – SPECIAL TOOL C-4996 (NOTE POSITION)
2 – DIAL INDICATOR SET
3 – DIFFERENTIAL ASSEMBLY

CAUTION: Side gear end play must be within 0.001 to 0.013 inch. Five select thrust washers are available: 0.027, 0.032, 0.037, 0.042, and 0.047 inch.

(6) After the end play is measured and adjusted, replace speedometer drive gear with a new one. Install drive gear lip downward. For service information, refer to Speedometer Drive Gear service in this section.

SYNCHRONIZER

DISASSEMBLY

Place synchronizer in a clean shop towel and wrap. Press on inner hub. Carefully open up shop towel and remove springs, balls, keys, hub, and sleeve.

ASSEMBLY

(1) Position synchronizer hub onto a suitable holding fixture (input shaft). The synchronizer hubs are directional. The hubs must be installed with the **U** facing upward.

(2) Install springs into hub slot (Fig. 143).

(3) Insert key into hub and spring.

(4) Apply petroleum jelly to the hole in the key. Insert balls into each key (Fig. 144).

(5) Slide sleeve over the hub and depress balls as you carefully slip the sleeve into position (Fig. 145).

(6) Line up stop ring tang over the keys in the hub (Fig. 146). Install stop rings. Center the keys and balls by pushing on both stop rings.

DISASSEMBLY AND ASSEMBLY (Continued)

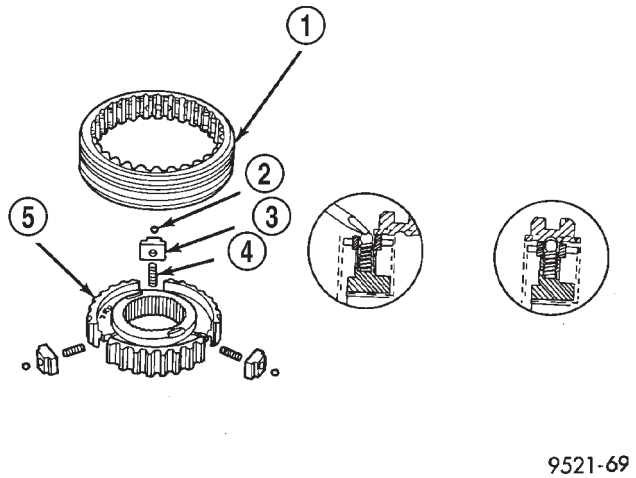

Fig. 143 Synchronizer Assembly

1 – SLEEVE
2 – BALL
3 – KEY
4 – SPRING
5 – HUB

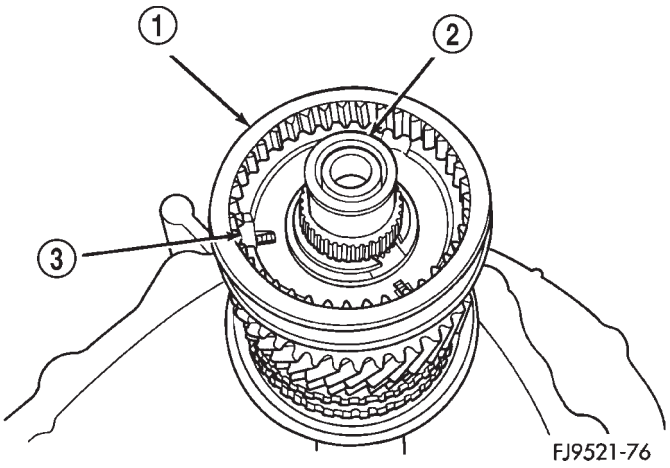

Fig. 145 Synchronizer Sleeve

1 – SLEEVE
2 – INPUT SHAFT
3 – KEY

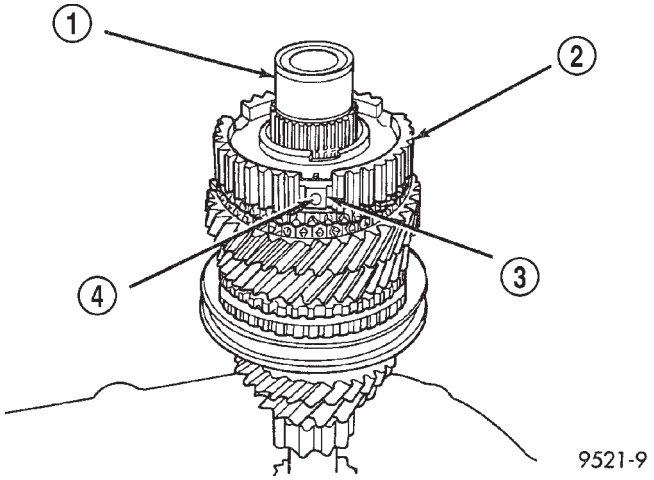

Fig. 144 Synchronizer Balls

1 – INPUT SHAFT
2 – HUB
3 – KEY
4 – BALL

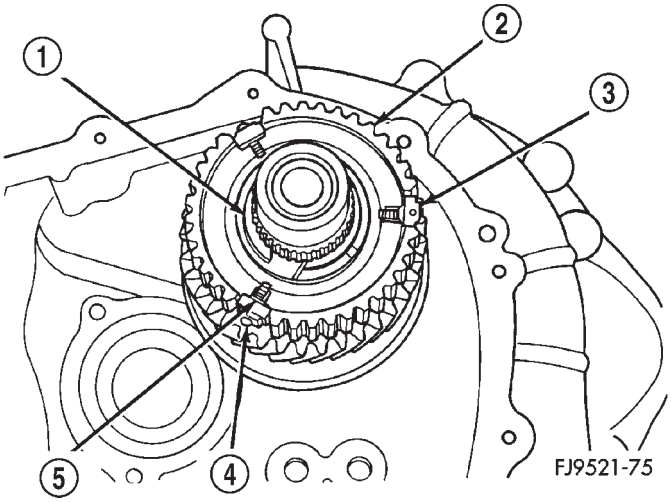

Fig. 146 Keys in Hub

1 – SNAP RING
2 – CLUTCH
3 – KEY
4 – BALL
5 – SPRING

SHIFT RAILS OVERHAUL

(1) Remove shift rails from the geartrain.

(2) To service the 5-R shift rail, remove the C-clip retaining the reverse shift lever arm. Remove the 5th shift fork roll pin and remove the 5th shift fork. Remove the shift lug roll pin and remove the shift lug. Replace parts as necessary.

(3) To service the 3-4 shift rail, remove the roll pin retaining the 3-4 shift fork. Remove the shift fork. Remove the shift lug roll pin and remove the shift lug. Replace parts as necessary.

(4) To service the 1-2 shift rail, remove the roll pin retaining the 1-2 shift fork. Remove the shift fork and replace parts as necessary.

TRANSAXLE CASE OVERHAUL

The sealant used to seal the transaxle case halves is Mopar® Gasket Maker, Loctite® 518, or equivalent. The sealant used for the bearing end–plate cover is Mopar® RTV.

The components that are left in the gear cases when the gear train is pulled out are the:

- Axle shaft seals

DISASSEMBLY AND ASSEMBLY (Continued)

- Output bearing race and retainer
- Input bearing and sleeve
- Differential bearing cones
- Shift rail bushings
- Shift shafts
- Shift shaft seals
- Shift shaft bushings
- Rear bearing oil feed trough

AXLE SHAFT SEALS

REMOVAL

(1) Insert a flat–blade pry tool at outer edge of axle shaft seal (Fig. 147).

(2) Tap on the pry tool with a small hammer and remove axle shaft seal.

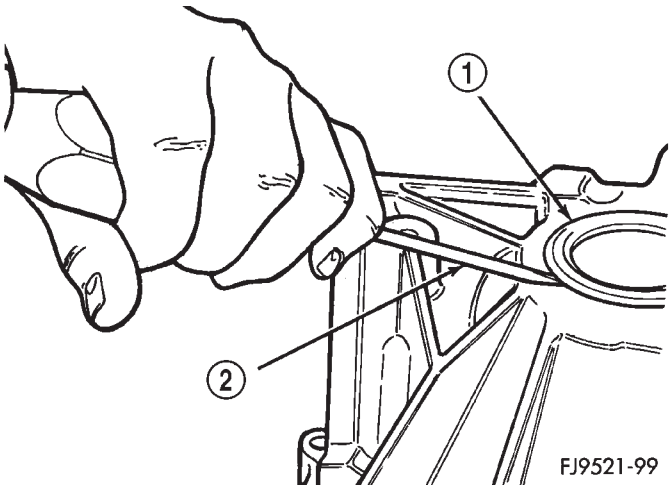

Fig. 147 Axle Shaft Seal Removal

1 – AXLE SEAL
2 – PRY TOOL

INSTALLATION

(1) Clean axle shaft seal bore of any excess sealant.

(2) Align axle shaft seal with axle shaft seal bore.

(3) Install axle seal on tool #6709 with C-4171 and insert into axle shaft seal bore.

(4) Tap seal into position (Fig. 148).

OUTPUT BEARING

REMOVAL

CAUTION: THE POSITION OF THE OUTPUT SHAFT BEARING IS CRITICAL. THE BEARING IS NOT IDENTICAL END-TO-END. INSTALL BEARING WITH LARGER DIAMETER CAGE RING FACING OUT.

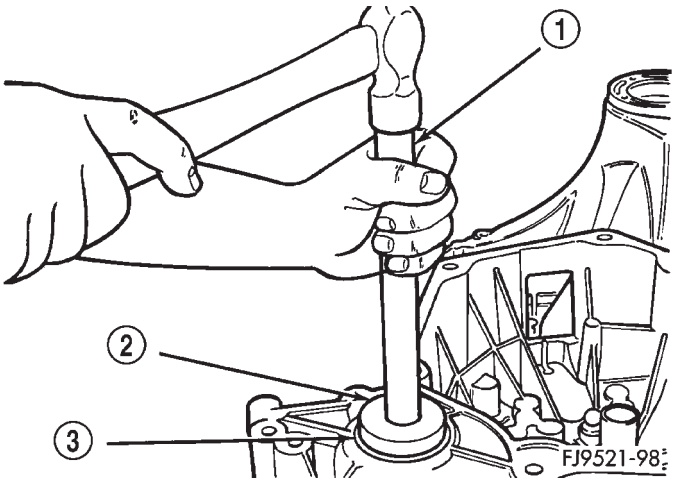

Fig. 148 Axle Seal Installation

1 – TOOL C-4171
2 – TOOL 6709
3 – AXLE SEAL

(1) Remove caged roller bearing from output bearing race (Fig. 149).

(2) Remove screws at output bearing retainer strap (Fig. 150).

(3) Install tool #6787 and slide hammer (Fig. 151). Tighten tool to output bearing race.

(4) Using slide hammer, remove output bearing race.

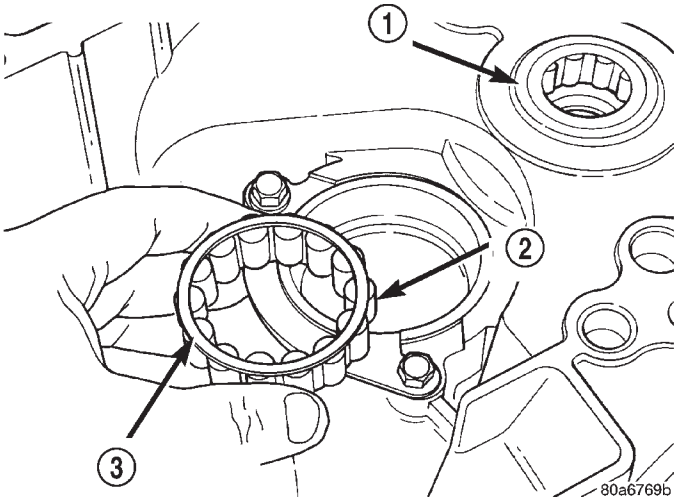

Fig. 149 Output Roller Bearing

1 – INPUT BEARING
2 – OUTPUT BEARING
3 – LARGER DIAMETER CAGE RING

DISASSEMBLY AND ASSEMBLY (Continued)

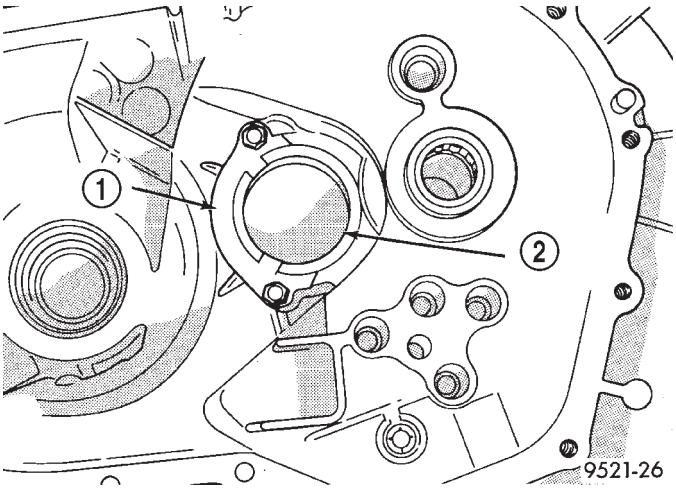

Fig. 150 Output Bearing Strap

1 – BEARING RETAINER
2 – OUTPUT BEARING RACE

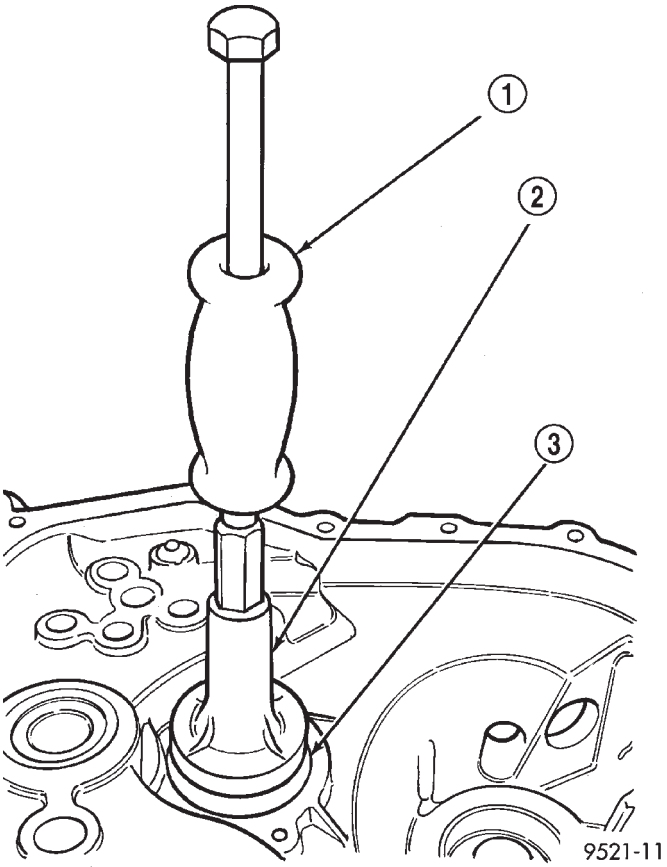

Fig. 151 Output Bearing Race Removal

1 – C-3752
2 – SPECIAL TOOL 6787
3 – OUTPUT SHAFT BEARING RACE

INSTALLATION

(1) Line up output bearing race to race bore.

(2) Insert tool #4628 with C-4171 into output bearing race (Fig. 152). Tap race into bore. Install output bearing into race. Verify that the larger diameter cage is facing outward. Position bearing retaining strap. Tighten bolts to 11 N·m (96 in. lbs.).

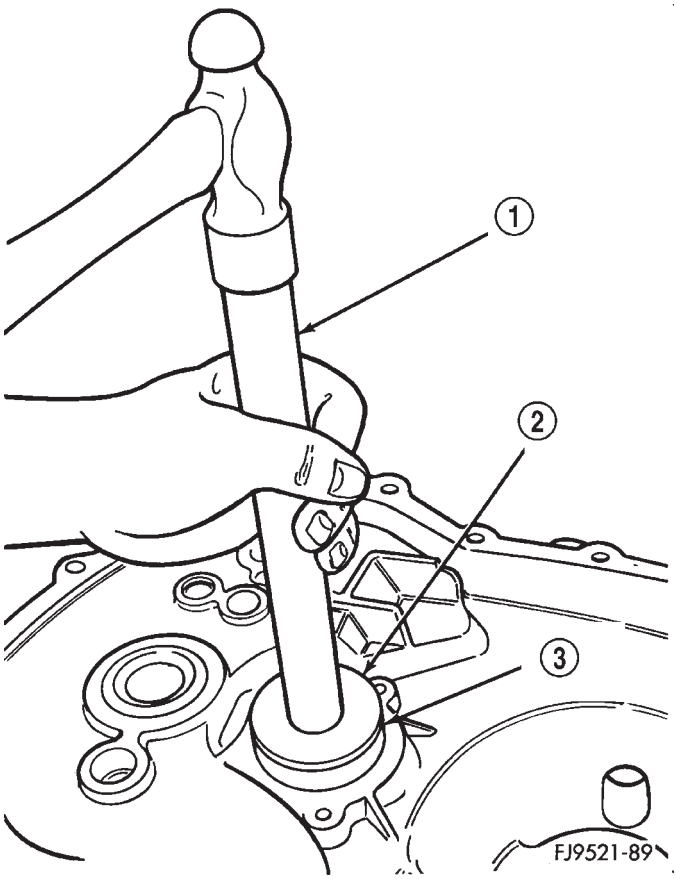

Fig. 152 Output Bearing Race Installation

1 – TOOL C-4171
2 – TOOL C-4628
3 – OUTPUT BEARING RACE

DISASSEMBLY AND ASSEMBLY (Continued)

INPUT BEARING AND SLEEVE

The input bearing is a one–piece bearing and sleeve unit (Fig. 153). The sleeve is the slide point for the clutch–release bearing and lever.

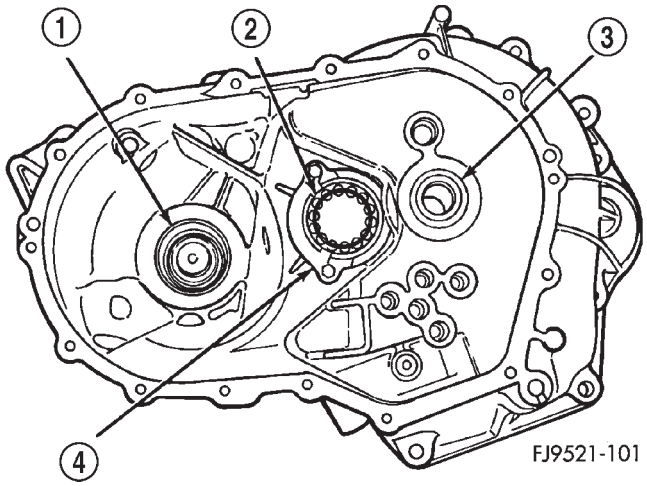

Fig. 153 Input Bearing And Sleeve

1 – DIFFERENTIAL BEARING
2 – OUTPUT BEARING
3 – INPUT BEARING
4 – BEARING RETAINER

REMOVAL

(1) Install tool #6342 over input bearing on the gear case side of the transaxle clutch housing.

(2) Press the input bearing out of the housing (Fig. 154).

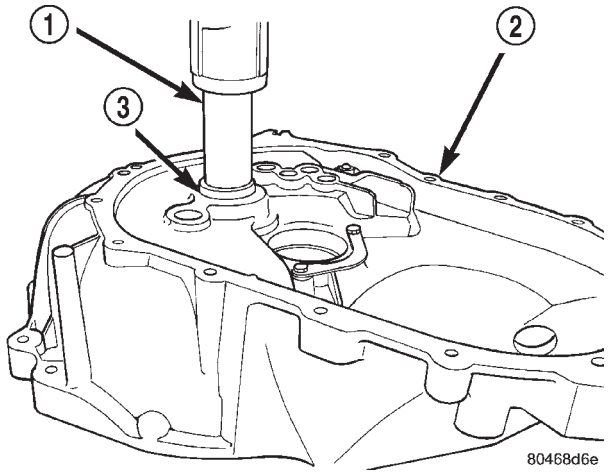

Fig. 154 Input Bearing Removal

1 – SPECIAL TOOL 6342
2 – BELLHOUSING HALF
3 – INPUT BEARING AND SLEEVE

INSTALLATION

(1) Apply coating of Loctite® sealant on bearing outer diameter. Position sleeve and bearing assembly at input bearing bore.

(2) Install tool #C-4680-1 over input bearing (Fig. 155).

(3) Using the spacer tool #4894 and shop press, install input bearing into bore until it is fully seated (Fig. 156).

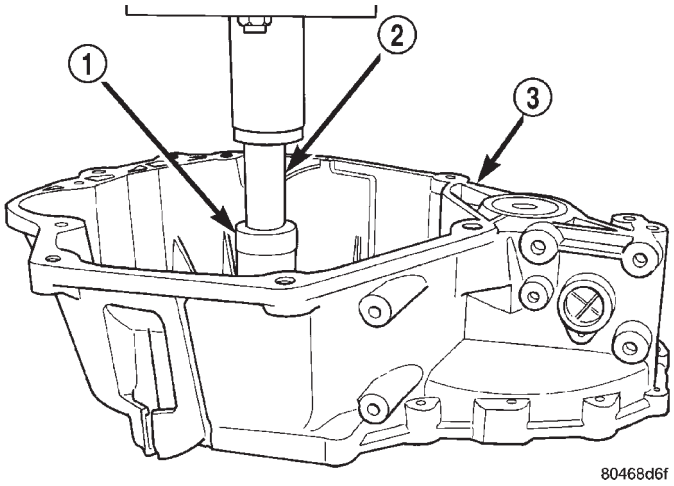

Fig. 155 Input Bearing Tool

1 – SPECIAL TOOL C-4680-1
2 – SPECIAL TOOL 4894
3 – BELLHOUSING HALF

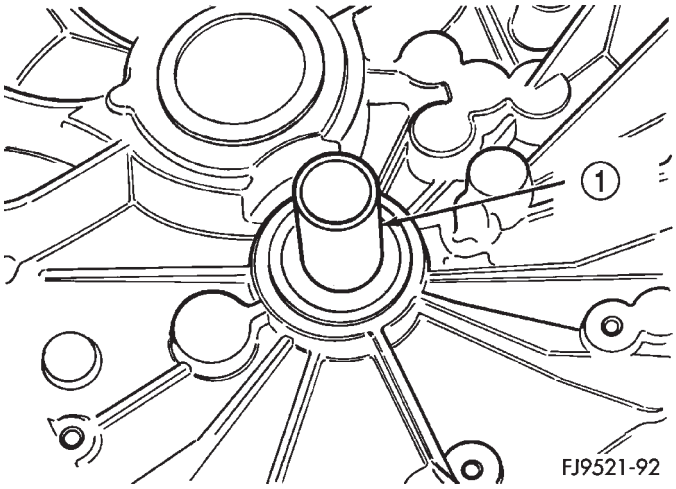

Fig. 156 Input Bearing Installed

1 – SLEEVE AND BEARING ASSEMBLY

DISASSEMBLY AND ASSEMBLY (Continued)

DIFFERENTIAL BEARING CUPS

REMOVAL

(1) Remove differential assembly from gear case using the procedure outlined in this group.

(2) Install Miller tool #L-4518 into the differential bearing cup (Fig. 157).

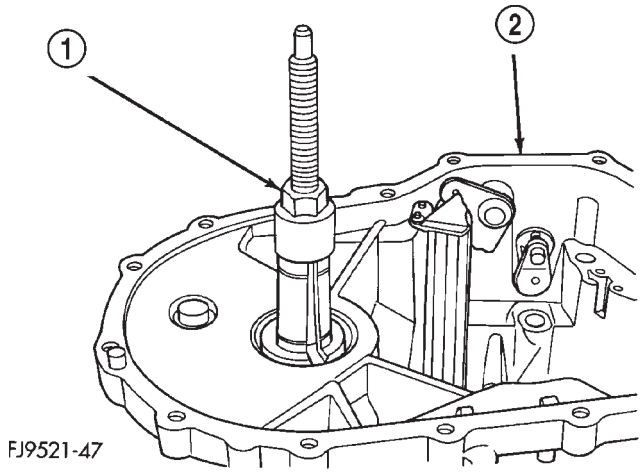

Fig. 157 Tool Installed in Bearing

1 – SPECIAL TOOL L-4518
2 – GEAR CASE

(3) Install the tool cup over the tool (Fig. 158).

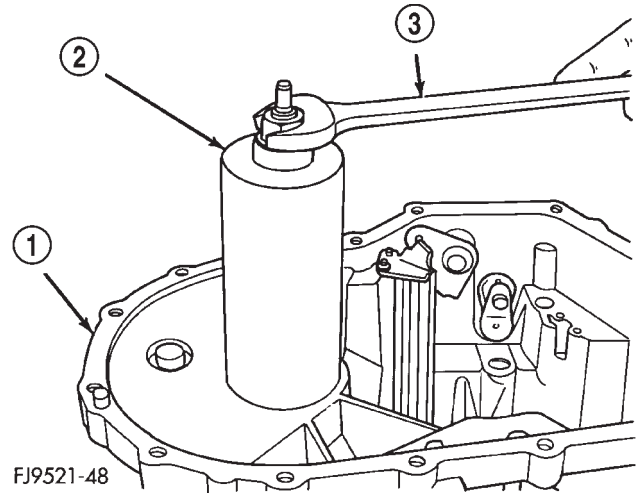

Fig. 158 Tool Cup Installed

1 – GEAR CASE
2 – SPECIAL TOOL L-4518
3 – WRENCH

(4) Tighten the tool until the race is removed from the case.

INSTALLATION

(1) Position the bearing cup into the case.

(2) Install the bearing cup onto Miller tool #L-4520.

(3) Using Miller tool #L-4520 and C-4171 driver, install differential bearing cup into the transaxle case.

SHIFT RAIL BUSHINGS

REMOVAL

(1) Thread tool #6786 into shift rail bushing.

(2) Install slide hammer #3752 onto tool.

(3) Remove bushing using slide hammer and tool assembly (Fig. 159).

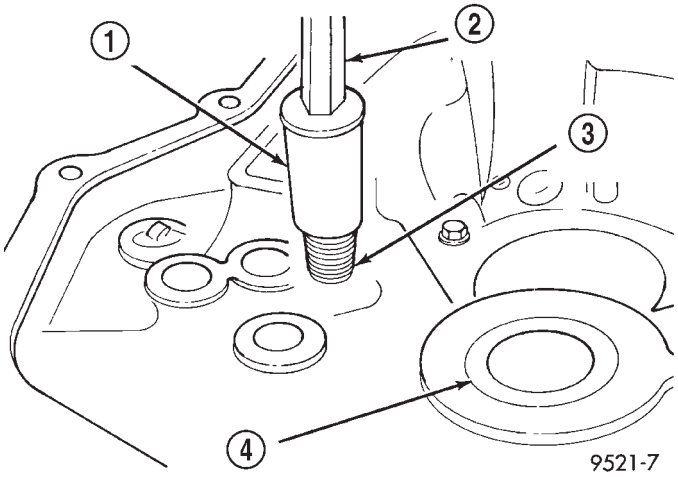

Fig. 159 Shift Rail Bushing Removal

1 – SPECIAL TOOL 6786
2 – SLIDE HAMMER C-3752
3 – SHIFTER RAIL BUSHING
4 – INPUT BEARING

INSTALLATION

(1) Line up replacement bushing in bore.

(2) Using tool #MD998343, tap bushing into bore until flush with the chamfer in the case.

SHIFT SHAFT SEALS

It is not necessary to remove the shift shafts from the transaxle to service the shift shaft seals.

REMOVAL

(1) Using a pick tool, pry up on the shift shaft seal and remove seal from bore.

INSTALLATION

(1) Position new shift shaft seal in bore.

(2) Install shift shaft seal into bore using an appropriate size deep-well socket.

DISASSEMBLY AND ASSEMBLY (Continued)

SHIFT SELECTOR SHAFT

REMOVAL

(1) Disassemble transaxle using the procedure outlined in this group.

(2) With the transaxle disassembled, remove the selector shaft by pushing on the shaft from the outside. Pull shaft out from the inside.

INSTALLATION

(1) Reverse removal procedure to install selector shaft.

SHIFT CROSSOVER SHAFT

REMOVAL

(1) Disassemble transaxle using the procedure outlined in this group.

(2) With the transaxle disassembled, remove the crossover shaft seal.

(3) Using snap–ring pliers, remove the snap ring at the crossover shaft bore (Fig. 160).

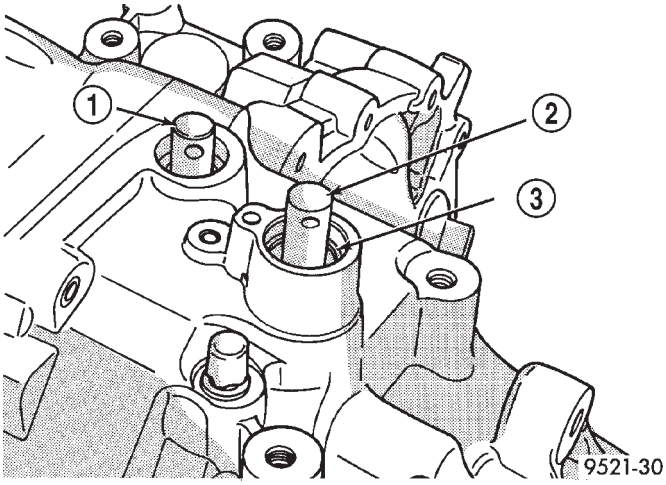

Fig. 160 Crossover Shaft Snap Ring

1 – SELECTOR SHAFT
2 – CROSSOVER SHAFT
3 – SNAP RING

(4) Push the crossover shaft in the case and remove the crossover assembly.

INSTALLATION

(1) Reverse removal procedure to install crossover shaft.

SHIFT SELECTOR SHAFT BUSHING

REMOVAL

(1) Remove selector shaft using procedure in this group.

(2) Thread tool #6786 into bushing.

(3) Install slide hammer #3752 onto tool and remove bushing using slide hammer (Fig. 161).

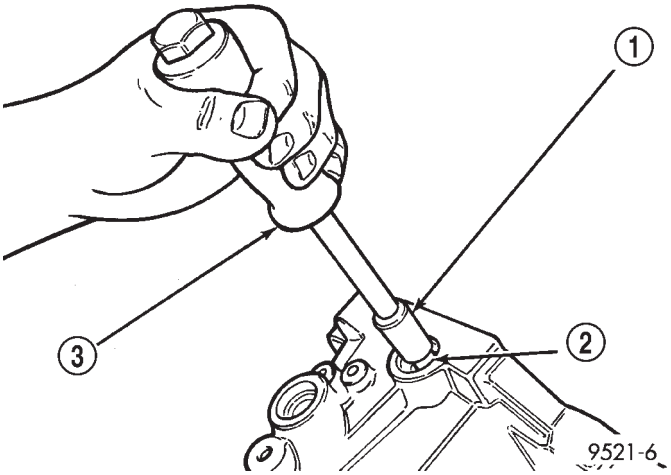

Fig. 161 Selector Shaft Bushing Removal

1 – SPECIAL TOOL 6786
2 – SHIFT SHAFT BUSHING
3 – SLIDE HAMMER C-3752

INSTALLATION

(1) Position replacement bushing over selector shaft bore.

(2) Using an appropriate size deep–well socket, install bushing in selector shaft bore (Fig. 162).

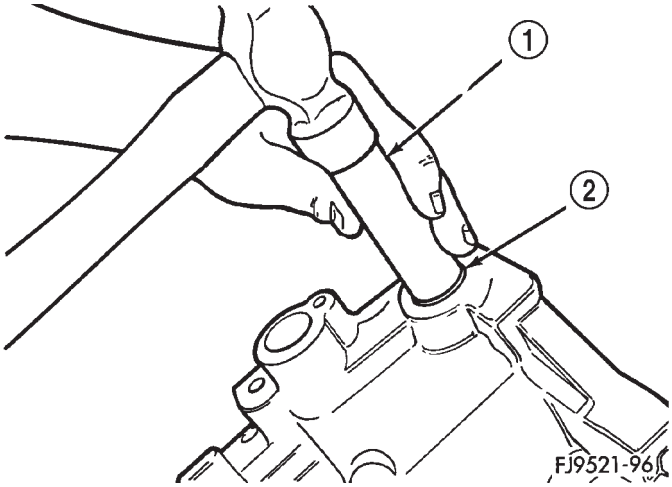

Fig. 162 Selector Shaft Bushing Installation

1 – DEEP WELL SOCKET
2 – SHIFTER SHAFT BUSHING

SHIFT CROSSOVER SHAFT BUSHING

REMOVAL

(1) Install slide hammer #3752 through the crossover bushing.

(2) Thread nut and washer onto slide hammer.

DISASSEMBLY AND ASSEMBLY (Continued)

(3) Using the slide hammer, remove the crossover shaft bushing (Fig. 163).

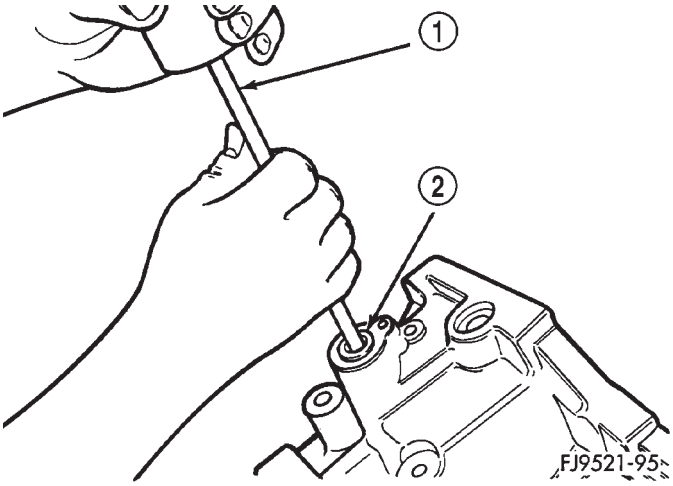

Fig. 163 Crossover Shaft Bushing Removal

1 – SLIDE HAMMER
2 – SHIFTER SHAFT BUSHING

INSTALLATION

(1) Position the replacement crossover shaft bushing over the crossover shaft bushing bore.

(2) Using an appropriate size deep–well socket, install the crossover shaft bushing into the bushing bore.

REAR BEARING OIL FEED TROUGH

The bearing oil feed trough is retained in the case by a pin that is molded into the case and clips that are part of the trough (Fig. 164).

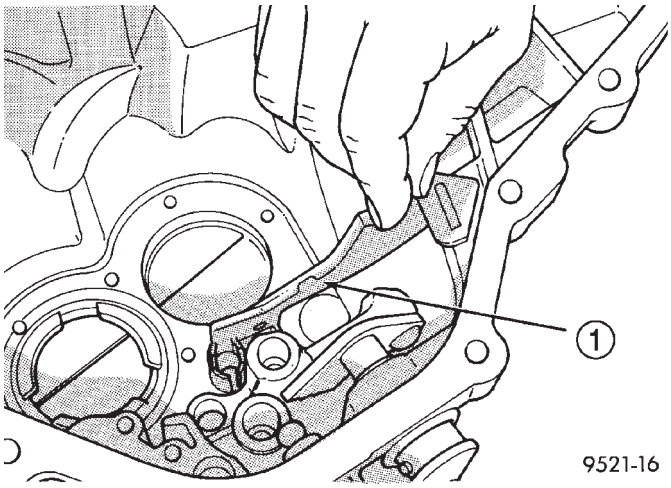

Fig. 164 Oil Feed Trough

1 – OIL FEED TROUGH

REMOVAL

(1) Using light plier pressure, squeeze the clips together at the rear of the trough.

(2) Slide the trough over the retaining pin that locates the trough in the case.

INSTALLATION

(1) Reverse removal procedure to install oil feed trough.

CLEANING AND INSPECTION

TRANSAXLE

Clean the gears, bearings, shafts, synchronizers, thrust washers, oil feeder, shift mechanism, gear case, and bellhousing with solvent. Dry all parts except the bearings with compressed air. Allow the bearings to either air dry or wipe them dry with clean shop towels.

Inspect the gears, bearings, shafts and thrust washers. Replace the bearings and cups if the rollers are worn, chipped, cracked, flat spotted, or brinnelled, or if the bearing cage is damaged or distorted. Replace the thrust washers if cracked, chipped, or worn. Replace the gears if the teeth are chipped, cracked, or worn thin. Inspect the synchronizers. Replace the sleeve if worn or damaged in any way. Replace the stop rings if the friction material is burned, flaking off, or worn. Check the condition of the synchro keys and springs. Replace these parts if worn, cracked, or distorted.

SYNCHRONIZER

CLEAN

Do not attempt to clean the blocking rings in solvent. The friction material will become contaminated. Place synchronizer components in a suitable holder and clean with solvent. Air dry.

INSPECT

Proper inspection of components involve:

- Teeth, for wear, scuffed, nicked, burred, or broken teeth
- Keys, for wear or distortion
- Balls and springs, for distortion, cracks, or wear

If any of these conditions exist in these components, replace as necessary.

ADJUSTMENTS

GEARSHIFT CROSSOVER CABLE ADJUSTMENT

(1) Remove center console from vehicle. Refer to BODY.

(2) Loosen adjusting screw on crossover cable at shifter (Fig. 165).

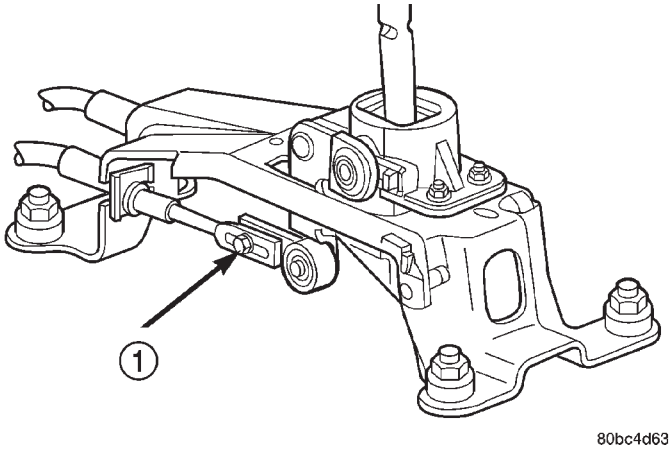

Fig. 165 Loosen Crossover Cable Adjustment Screw

1 – CROSSOVER ADJUSTMENT SCREW

(3) Pin transaxle crossover lever in 3-4 neutral position using a 1/4 inch drill bit. Align hole in crossover lever with the hole in the boss on the transaxle case (Fig. 166). Make sure drill bit goes into transaxle case at least one half inch.

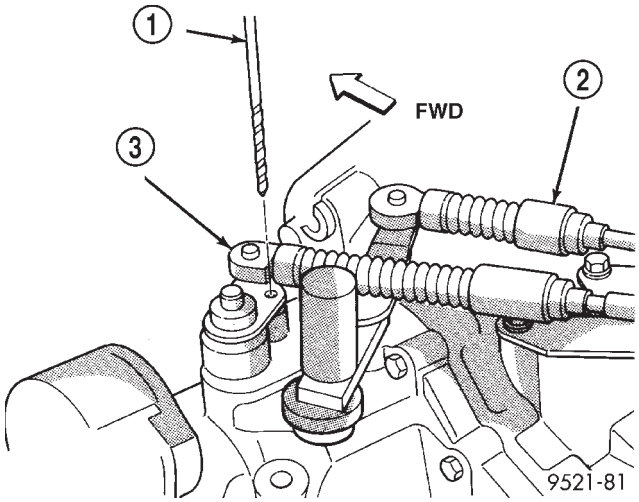

Fig. 166 Crossover Lever Pin Procedure

1 – ¼'' DRILL BIT
2 – SELECTOR CABLE
3 – CROSSOVER CABLE

(4) The shifter is spring loaded and self centering. Allow shifter to rest in its neutral position. Torque adjustment screw to 8 N·m (70 in. lbs.). Care must be taken to avoid moving the shift mechanism off-center during screw tightening.

(5) Remove drill bit from transaxle case and perform functional check by shifting transaxle into all gears.

(6) Reinstall center console. Reinstall boot and knob. Refer to BODY.

BEARING ADJUSTMENT PROCEDURE

GENERAL RULES ON SERVICING BEARINGS

(1) Use extreme care when removing and installing bearing cups and cones. Use only an arbor press for installation, as a hammer may not properly align the bearing cup or cone. Burrs or nicks on the bearing seat will give a false end play reading while gauging for proper shims. Improperly seated bearing cups and cones are subject to low–mileage failure.

(2) Bearing cups and cones should be replaced if they show signs of pitting or heat distress. If distress is seen on either the cup or bearing rollers, both cup and cone must be replaced.

(3) Bearing preload and drag torque specifications must be maintained to avoid premature bearing failures. Used (original) bearings may lose up to 50% of their original drag torque after break in. All bearing adjustments must be made with no other component interference or gear intermesh.

(4) Replace bearings as a pair: If one differential bearing is defective, replace both differential bearings, if one input shaft bearing is defective, replace both input shaft bearings.

(5) Bearing cones must not be reused if removed.

(6) Turning torque readings should be obtained while smoothly rotating in either direction.

DIFFERENTIAL BEARING PRELOAD ADJUSTMENT

NOTE: True bearing turning torque readings can be obtained only with the geartrain removed from the case.

(1) Remove bearing cup and existing shim from clutch bellhousing case.

(2) Press in new bearing cup into bellhousing case (or use a cup that has been ground down on the outer edge for ease of measurement).

(3) Press in new bearing cup into gear case side.

(4) Oil differential bearings with Mopar® type M.S. 9417 Manual Transaxle Fluid. Install differential assembly in transaxle gear case. Install clutch bellhousing over gear case. Install and torque case bolts to 29 N·m (21 ft. lbs.).

ADJUSTMENTS (Continued)

(5) Position transaxle with bellhousing facing down on workbench with C-clamps. Position dial indicator.

(6) Apply a medium load to differential with Tool C-4995 and a T-handle, in the downward direction. Roll differential assembly back and forth a number of times. This will settle the bearings. Zero the dial indicator. To obtain end play readings, apply a medium load in an upward direction while rolling differential assembly back and forth (Fig. 167). Record end play.

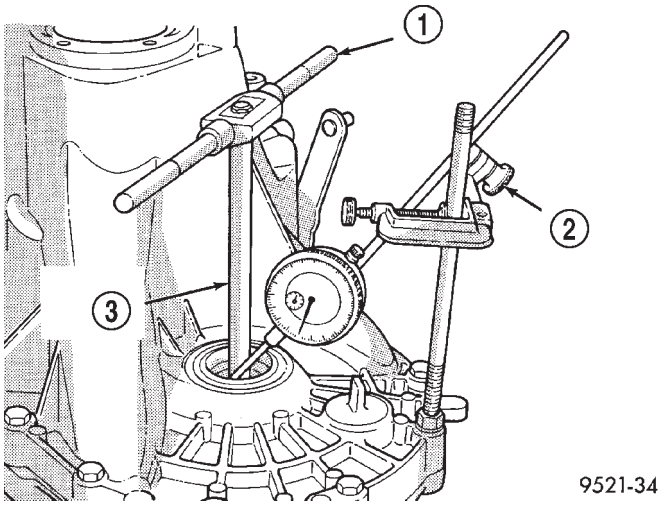

Fig. 167 Checking Differential Bearing End Play to Determine Shim Thickness

1 – T-HANDLE
2 – DIAL INDICATOR SET
3 – SPECIAL TOOL C-4995

(7) The shim required for proper bearing preload is the **total of end play, plus (constant) preload of 0.18mm (0.007 in.).** Never combine shims to obtain the required preload.

(8) Remove case bolts. Remove clutch bellhousing differential bearing cup. Install shim(s) selected in Step 7. Then press the bearing cup into clutch bellhousing.

(9) Install clutch bellhousing. Install and torque case bolts to 26 N·m (19 ft. lbs.).

(10) Using Special Tool C-4995 and an inch-pound torque wrench, check turning torque of the differential assembly (Fig. 168). **The turning torque should be 6 to 12 in. lbs. If the turning torque is too high, install a 0.05mm (0.002 inch) thinner shim. If the turning torque is too low, install a 0.05mm (0.002 inch) thicker shim.**

(11) Recheck turning torque. Repeat Step 10 until the proper turning torque is obtained.

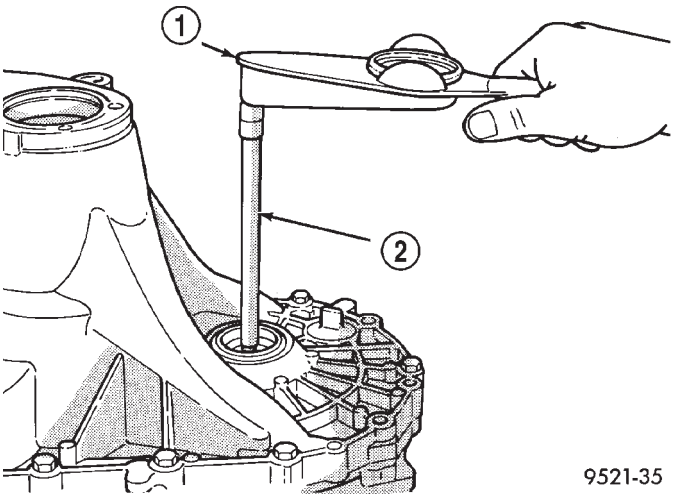

Fig. 168 Checking Differential Bearing Turning Torque

1 – INCH-POUND TORQUE WRENCH
2 – SPECIAL TOOL C-4995

SPECIFICATIONS

NV T350 (A-578)

DESCRIPTION	TORQUE
Back-up Lamp Switch	24 N·m (18 ft. lbs.)
Crossover Cable Adj. Screw	8 N·m (70 in. lbs.)
Drain Plug	30 N·m (267 in. lbs.)
Differential Ring Gear Bolts	81 N·m (60 ft. lbs.)
Dust Shield to Transaxle	12 N·m (105 in. lbs.)
End Plate Cover Bolts	29 N·m (21 ft. lbs.)
Front Engine Mount to Trans	108 N·m (80 ft. lbs.)
Front Mount Through Bolt	61 N·m (45 ft. lbs.)
Front Mount to Engine Bolt	54 N·m (40 ft. lbs.)
Lateral Bending Strut to Engine	54 N·m (40 ft. lbs.)
Lateral Bending Strut to Trans.	54 N·m (40 ft. lbs.)
Left Mount Through Bolt	108 N·m (80 ft. lbs.)
Left Mount to Transaxle	54 N·m (40 ft. lbs.)
Output Bearing Race Ret. Strap	11 N·m (96 in. lbs.)
Reverse Fork Bracket	11 N·m (96 in. lbs.)
Reverse Idler Shaft Bolt	26 N·m (19 ft. lbs.)
Shift Cable Bracket to Transaxle	28 N·m (250 in. lbs.)
Transaxle Case Bolts	29 N·m (21 ft. lbs.)
Transaxle to Engine Bolt	95 N·m (70 ft. lbs.)
Vehicle Speed Sensor	7 N·m (60 in. lbs.)
Vertical Bending Strut to Engine	108 N·m (80 ft. lbs.)
Vertical Bending Strut to Trans.	108 N·m (80 ft. lbs.)

SPECIFICATIONS (Continued)

NOTE: Bolts that have thread sealer or torque lock patches should not be reused. Always install new bolts in these applications.

NV T350 (A-578) MANUAL TRANSAXLE FLUID FILL

TRANSAXLE	METRIC MEASURE	U.S. MEASURE
NV T350	2.4-2.7 Liters	2.5-2.8 Quarts

SPECIAL TOOLS

NV T350 (A-578) MANUAL TRANSAXLE

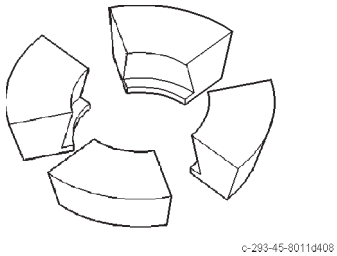

Adapter Blocks C-293–45

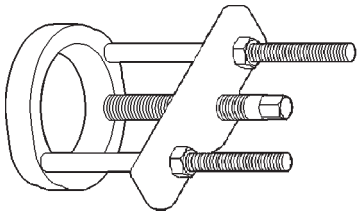

Puller Press C-293–PA

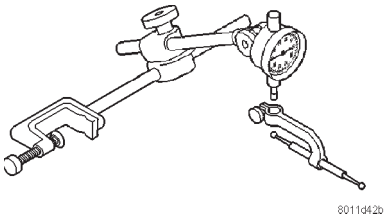

Dial Indicator C-3339

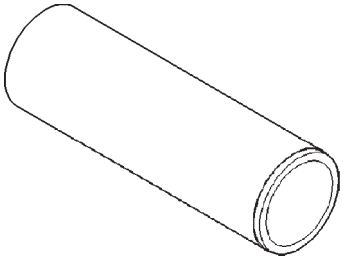

Sleeve C-3717

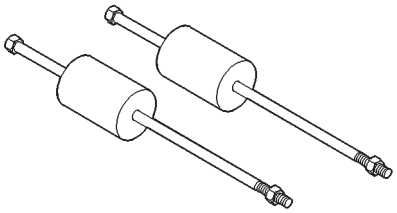

Slide Hammer C-3752

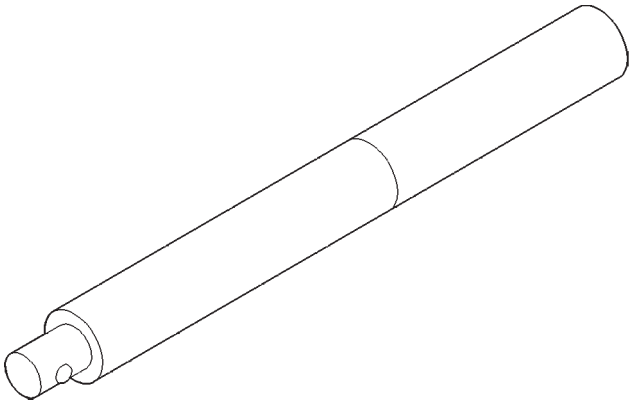

Universal Handle C-4171

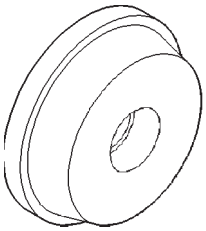

Bearing Installer C-4628

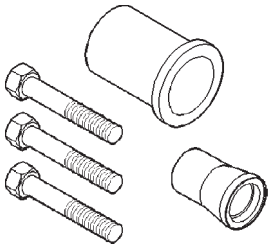

Seal Remover C-4680

SPECIAL TOOLS (Continued)

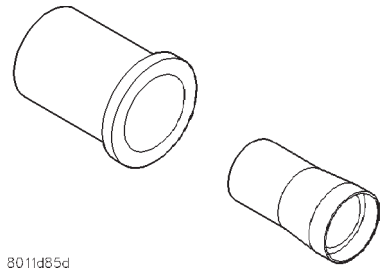

Seal Installer C-4992

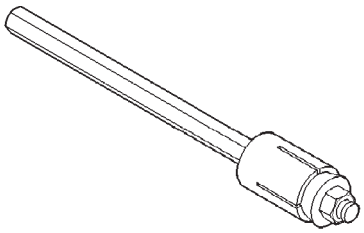

Torque Tool C-4995

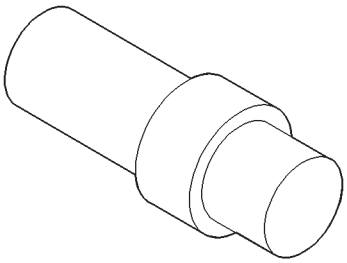

Adapter C-4996

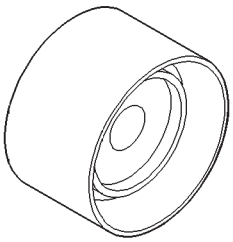

Installer L-4410

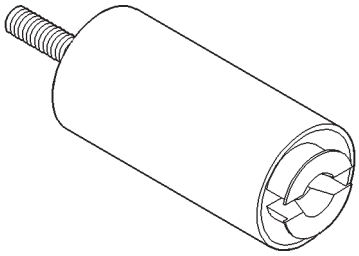

Special Jaw Set L-4518

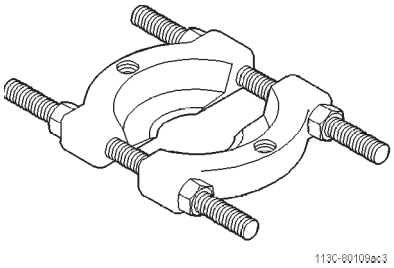

Bearing Splitter 1130

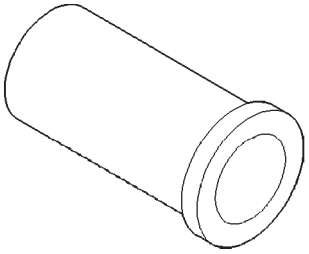

Driver 6342

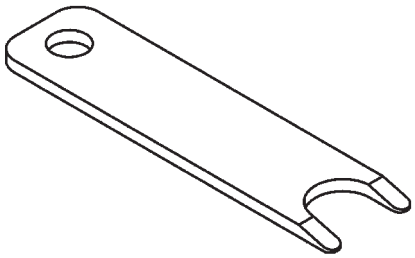

Disconnect Tool 6638A

SPECIAL TOOLS (Continued)

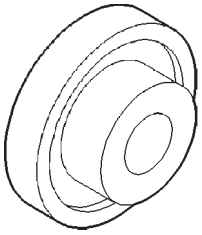

Seal Installer 6709

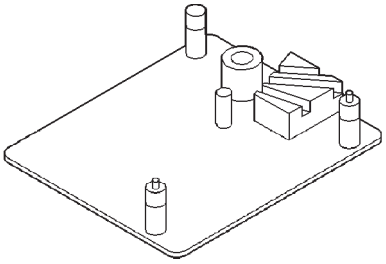

Bench Fixture 6785

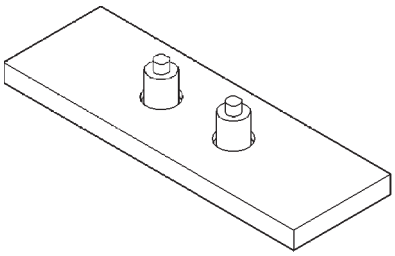

Bearing Remover 6768

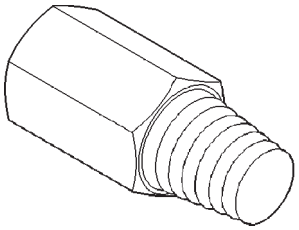

Remover 6786

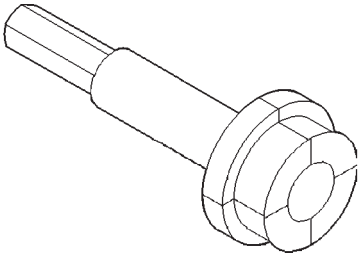

Remover 6787

41TE TRANSAXLE

TABLE OF CONTENTS

page

DESCRIPTION AND OPERATION
41TE TRANSAXLE 55
FLUID 57
TORQUE CONVERTER 58
OIL PUMP 59
VALVE BODY 59
ACCUMULATORS 61
INPUT CLUTCHES 61
HOLDING CLUTCHES 62
PLANETARY GEARTRAIN 63
DIFFERENTIAL 63
TRANSMISSION CONTROL MODULE 64
TRANSMISSION CONTROL RELAY 66
SOLENOID/PRESSURE SWITCH ASSEMBLY. . . . 66
TRANSMISSION RANGE SENSOR 68
INPUT SPEED SENSOR 69
OUTPUT SPEED SENSOR. 70
BRAKE TRANSMISSION SHIFT INTERLOCK SYSTEM 70
DIAGNOSIS AND TESTING
41TE TRANSAXLE GENERAL DIAGNOSIS. 71
ROAD TEST. 71
HYDRAULIC PRESSURE TESTS 72
CLUTCH AIR PRESSURE TESTS. 74
FLUID LEAKAGE-TORQUE CONVERTER HOUSING AREA 75
BRAKE/TRANSMISSION SHIFT INTERLOCK SYSTEM 76
SERVICE PROCEDURES
FLUID LEVEL AND CONDITION CHECK 76
FLUID AND FILTER SERVICE—TRANSAXLE 77
ALUMINUM THREAD REPAIR 79
FLUSHING COOLERS AND TUBES 79
OIL PUMP VOLUME CHECK 80
TRANSAXLE QUICK LEARN PROCEDURE 80
PINION FACTOR PROCEDURE 80
REMOVAL AND INSTALLATION
GEARSHIFT CABLE. 80
GEARSHIFT MECHANISM 84
BRAKE/TRANSMISSION SHIFT INTERLOCK CABLE 85
INTERLOCK MECHANISM 88
SOLENOID/PRESSURE SWITCH ASSEMBLY. . . . 89
TRANSMISSION RANGE SENSOR 91
INPUT SPEED SENSOR 94
OUTPUT SPEED SENSOR. 96
TRANSMISSION CONTROL MODULE 97
VALVE BODY 98
TRANSAXLE 101
OIL PUMP SEAL. 105
DISASSEMBLY AND ASSEMBLY
VALVE BODY 105
TRANSAXLE—DISASSEMBLY 115
OIL PUMP 135
INPUT CLUTCH ASSEMBLY. 136
TRANSAXLE—ASSEMBLY 153
DIFFERENTIAL REPAIR 177
CLEANING AND INSPECTION
CLEANING VALVE BODY 183
ADJUSTMENTS
GEARSHIFT CABLE 183
BRAKE/TRANSMISSION SHIFT INTERLOCK SYSTEM 184
SCHEMATICS AND DIAGRAMS
41TE TRANSAXLE HYDRAULIC SCHEMATICS . . 186
SPECIFICATIONS
41TE AUTOMATIC TRANSAXLE. 199
41TE TORQUE SPECIFICATIONS 199
SPECIAL TOOLS
41TE AUTOMATIC TRANSAXLE. 199

DESCRIPTION AND OPERATION

41TE TRANSAXLE

DESCRIPTION

The 41TE (Fig. 1) is a four-speed transaxle that is a conventional hydraulic/mechanical assembly with an integral differential, and is controlled with adaptive electronic controls and monitors. The hydraulic system of the transaxle consists of the transaxle fluid, fluid passages, hydraulic valves, and various line pressure control components. An input clutch assembly which houses the underdrive, overdrive, and reverse clutches is used. It also utilizes separate holding clutches: 2nd/4th gear and Low/Reverse. The primary mechanical components of the transaxle consist of the following:

- Three multiple disc input clutches
- Two multiple disc holding clutches
- Four hydraulic accumulators
- Two planetary gear sets
- Hydraulic oil pump
- Valve body
- Solenoid/Pressure switch assembly
- Integral differential assembly

DESCRIPTION AND OPERATION (Continued)

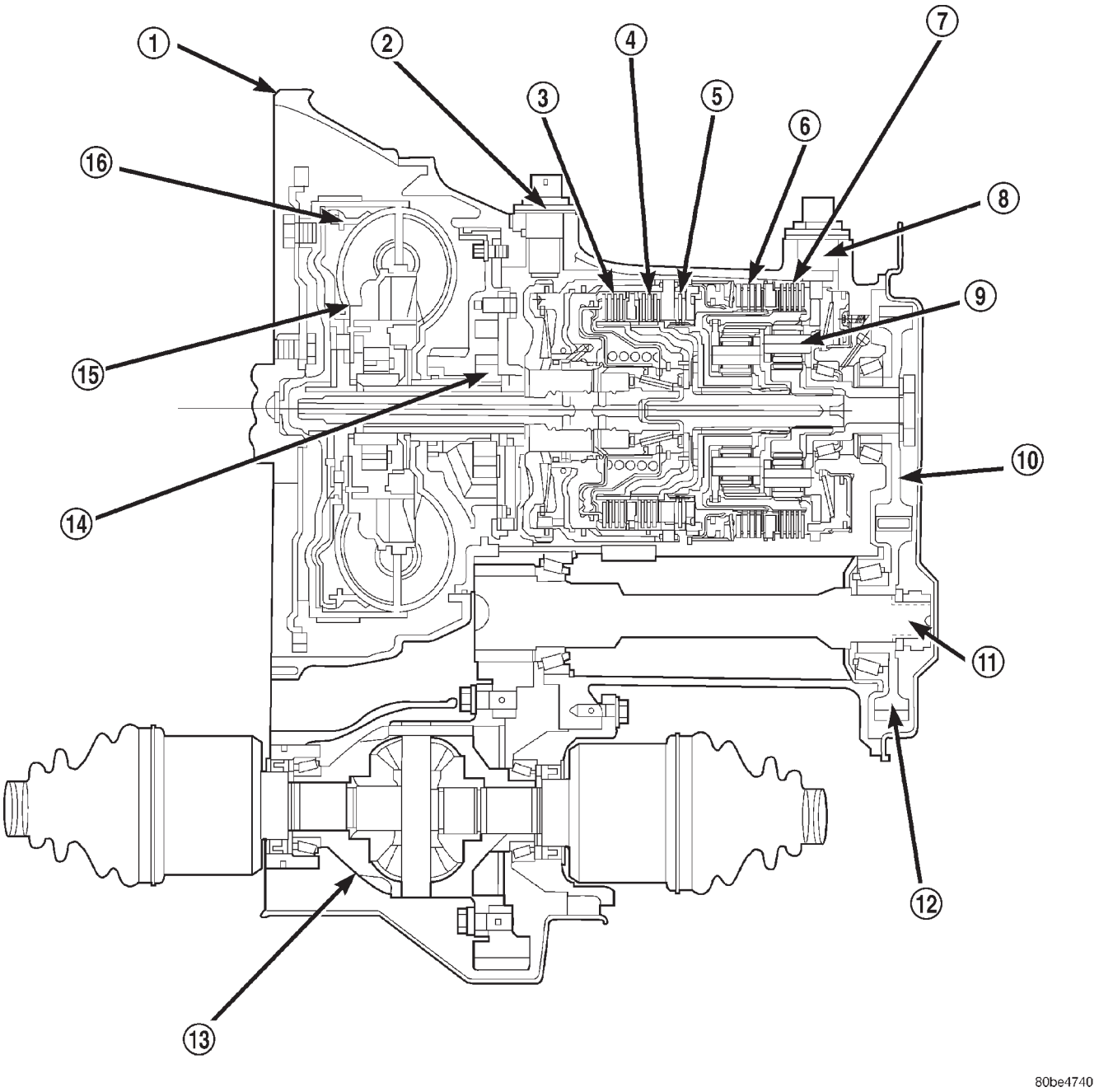

Fig. 1 41TE Transaxle

1 – CASE
2 – INPUT SPEED SENSOR
3 – UNDERDRIVE CLUTCH
4 – OVERDRIVE CLUTCH
5 – REVERSE CLUTCH
6 – 2/4 CLUTCH
7 – LOW/REVERSE CLUTCH
8 – OUTPUT SPEED SENSOR
9 – PLANETARY GEAR SET
10 – OUTPUT SHAFT GEAR
11 – TRANSFER SHAFT
12 – TRANSFER SHAFT GEAR
13 – DIFFERENTIAL
14 – OIL PUMP
15 – TORQUE CONVERTER
16 – TORQUE CONVERTER CLUTCH

Control of the transaxle is accomplished by fully adaptive electronics. Optimum shift scheduling is accomplished through continuous real-time sensor feedback information provided to the Transmission Control Module (TCM).

DESCRIPTION AND OPERATION (Continued)

The TCM is the heart of the electronic control system and relies on information from various direct and indirect inputs (sensors, switches, etc.) to determine driver demand and vehicle operating conditions. With this information, the TCM can calculate and perform timely and quality shifts through various output or control devices (solenoid pack, transmission control relay, etc.).

The TCM also performs certain self-diagnostic functions and provides comprehensive information (sensor data, DTC's, etc.) which is helpful in proper diagnosis and repair. This information can be viewed with the DRB scan tool.

TRANSAXLE IDENTIFICATION

The 41TE transaxle identification code is a series of digits printed on a bar-code label that is fixed to the transaxle case as shown in (Fig. 2).

For example, the identification code K 821 1125 1316 can be broken down as follows:

- K = Kokomo Transmission Plant
- 821 = Last three digits of the transaxle part number
- 1125 = Build date
- 1316 = Build sequence number

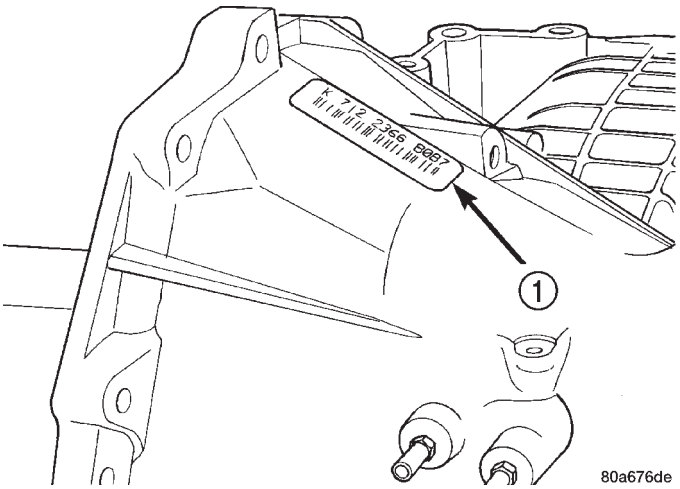

Fig. 2 Transaxle Identification Label

1 – IDENTIFICATION TAG

If the tag is not legible or missing, the "PK" number, which is stamped into the transaxle case behind the transfer gear cover, can be referred to for identification. This number differs slightly in that it contains the entire transaxle part number, rather than the last three digits.

OPERATION

Transmission output is directed to an integral differential by a transfer gear system in the following input-to-output ratios:

First	2.84 : 1
Second	1.57 : 1
Third	1.00 : 1
Overdrive	0.69 : 1
Reverse	2.21 : 1

Final Drive Ratio (FDR) is dependent on which engine option is selected:

2.0L	4.07 FDR
2.4L	3.91 FDR

FLUID

NOTE: Refer to the maintenance schedules in LUBRICATION AND MAINTENANCE for the recommended maintenance (fluid/filter change) intervals for this transaxle.

NOTE: Refer to Service Procedures for fluid level checking procedures.

NOTE: The transmission and differential sump have a common oil sump with an opening between the two.

DESCRIPTION

Mopar® ATF+4 (Automatic Transmission Fluid-Type 9602) is required in this transaxle. Substitute fluids can induce torque converter clutch shudder.

Mopar® ATF+4 (Automatic Transmission Fluid-Type 9602) when new is red in color. The ATF is dyed red so it can be identified from other fluids used in the vehicle such as engine oil or antifreeze. The red color is not permanent and is not an indicator of fluid condition. As the vehicle is driven, the ATF will begin to look darker in color and may eventually become brown. **This is normal.** A dark brown/black fluid accompanied with a burnt odor and/or deterioration in shift quality may indicate fluid deterioration or transmission component failure.

FLUID ADDITIVES

DaimlerChrysler strongly recommends against the addition of any fluids to the transmission, other than those automatic transmission fluids listed above. Exceptions to this policy are the use of special dyes to aid in detecting fluid leaks.

Various "special" additives and supplements exist that claim to improve shift feel and/or quality. These additives and others also claim to improve converter clutch operation and inhibit overheating, oxidation, varnish, and sludge. These claims have not been supported to the satisfaction of DaimlerChrysler and these additives **must not be used.** The use of transmission "sealers" should also be avoided, since they may adversely affect the integrity of transmission seals.

DESCRIPTION AND OPERATION (Continued)

TORQUE CONVERTER

DESCRIPTION

The torque converter is located in the bellhousing area of the transaxle, between the engine and transaxle. The torque converter is a fluid coupling that transmits torque from the engine drive plate to the input shaft of the transaxle. The torque converter consists of four main components (Fig. 3) :

- Impeller
- Turbine
- Stator
- Converter Clutch assembly

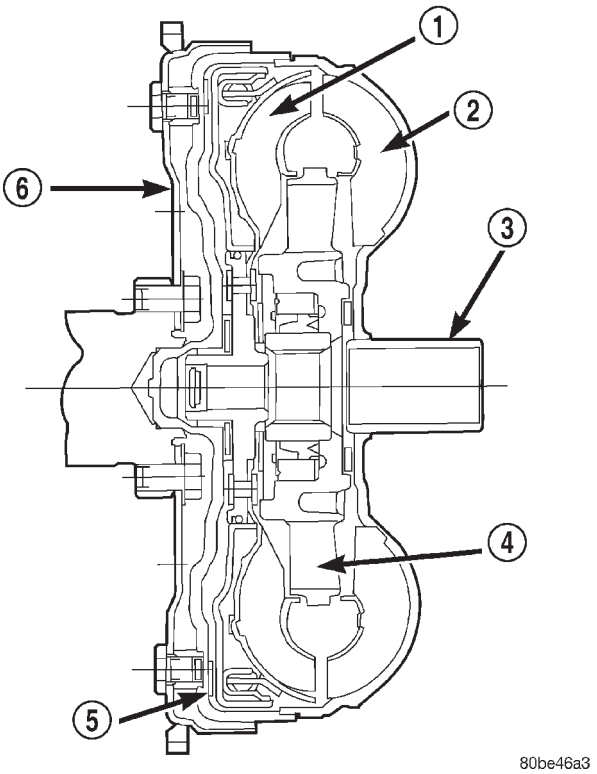

Fig. 3 Torque Converter Assembly

1 – TURBINE
2 – IMPELLER
3 – HUB
4 – STATOR
5 – CONVERTER CLUTCH DISC
6 – DRIVE PLATE

OPERATION

The converter impeller (driving member), which is integral to the converter housing and bolted to the engine drive plate, rotates at engine speed. The converter turbine (driven member), which reacts from fluid pressure generated by the impeller, rotates and turns the transmission input shaft.

Torque is transmitted by fluid passing through curved vanes in both the impeller and turbine. Since the coupling is produced by transmission fluid, the turbine can slip or turn slower than the impeller.

The stator contains a one-way overrunning clutch, which free-wheels when the impeller and turbine are rotating at the same speed. However, the stator stops when speed reduction or torque increase take place. When the stator stops, it changes the direction of the fluid leaving the turbine vanes. This directs fluid back into the impeller with greater force, resulting in torque multiplication.

The torque converter clutch is hydraulically operated and controlled by the TCM. It consists of a piston and a frictional disc that form a direct mechanical link between the impeller and turbine when slippage is inefficient or unnecessary.

The torque converter hub drives the transmission oil pump.

ELECTRONICALLY MODULATED CONVERTER CLUTCH

In order to reduce heat build-up in the transmission and buffer the powertrain against torsional vibrations, the TCM can duty cycle the LR/CC solenoid to achieve a smooth application of the torque converter clutch. This function, also referred as “Electronically Modulated Converter Clutch (EMCC), can occur at various times depending on the following variables:

- Shift lever position
- Current gear range
- Transmission fluid temperature
- Engine coolant temperature
- Input speed
- Throttle angle
- Engine speed

The TCM controls the torque converter by way of internal logic software. The programming of the software provides the TCM with fine control over the LR/CC solenoid. There are four output logic states that can be applied as follows:

- No EMCC
- Partial EMCC
- Full EMCC
- Gradual-to-no EMCC

NO EMCC

Under No EMCC conditions, the L/R Solenoid is OFF. There are several conditions that can result in NO EMCC operations. No EMCC can be initiated due to a fault in the transaxle or because the TCM does not see the need for EMCC under current driving conditions.

PARTIAL EMCC

Partial EMCC operation modulates the L/R Solenoid (duty cycle) to obtain partial torque converter

DESCRIPTION AND OPERATION (Continued)

clutch application. Partial EMCC operation is maintained until Full EMCC is called for an actuated. During Partial EMCC some slip does occur. Partial EMCC will usually occur at low speeds, low load and light throttle situations.

FULL EMCC

During Full EMCC operation, the TCM increases the L/R Solenoid duty cycle to full ON after Partial EMCC control brings the engine speed within the desired slip range of transaxle input speed relative to engine rpm.

GRADUAL-TO-NO EMCC

This operation is to soften the change from Full or Partial EMCC to No EMCC. This is done at mid-throttle by decreasing the L/R Solenoid duty cycle.

OIL PUMP

DESCRIPTION

The oil pump is located in the pump housing inside the bell housing of the transaxle case. The oil pump consists of an inner and outer gear, a housing, and a cover that also serves as the reaction shaft support.

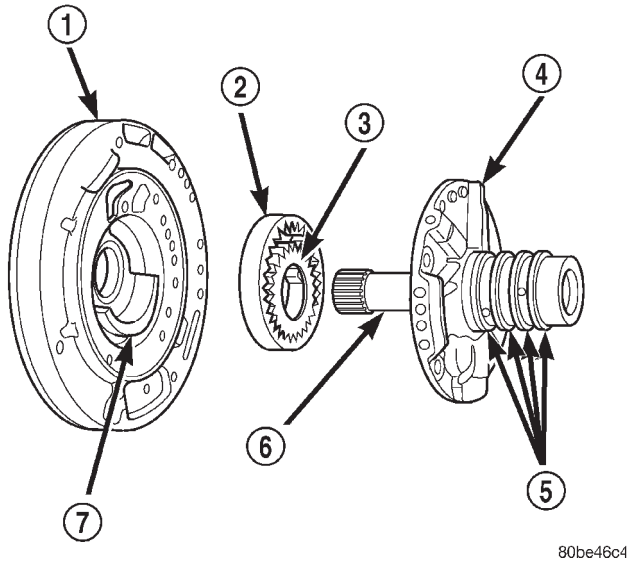

Fig. 4 Oil Pump Assembly

1 – PUMP HOUSING
2 – OUTER PUMP GEAR
3 – INNER PUMP GEAR
4 – REACTION SHAFT SUPPORT
5 – SEAL RINGS (4)
6 – REACTION SHAFT
7 – CRESCENT

OPERATION

As the torque converter rotates, the converter hub rotates the inner and outer gears. As the gears rotate, the clearance between the gear teeth increases in the crescent area, and creates a suction at the inlet side of the pump. This suction draws fluid through the pump inlet from the oil pan. As the clearance between the gear teeth in the crescent area decreases, it forces pressurized fluid into the pump outlet and to the valve body.

VALVE BODY

DESCRIPTION

The valve body assembly consists of a cast aluminum valve body, a separator plate, and transfer plate. The valve body contains valves and check balls that control fluid delivery to the torque converter clutch, solenoid/pressure switch assembly, and frictional clutches. The valve body contains the following components (Fig. 5) :

- Regulator valve
- Solenoid switch valve
- Manual valve
- Converter clutch switch valve
- Converter clutch control valve
- Torque converter regulator valve
- Low/Reverse switch valve
- Vent reservoir check valve

In addition, the valve body also contains the thermal valve, #2,3&4 check balls, the #5 (overdrive) check valve and the 2/4 accumulator assembly. Refer to Valve Body Disassembly & Assembly for the location of these components.

OPERATION

NOTE: Refer to the Hydraulic Schematics for a visual aid in determining valve location, operation and design.

REGULATOR VALVE

The regulator valve controls hydraulic pressure in the transaxle. It receives unregulated pressure from the pump, which works against spring tension to maintain oil at specific pressures. A system of sleeves and ports allows the regulator valve to work at one of three predetermined pressure levels. Regulated oil pressure is also referred to as “line pressure.”

SOLENOID SWITCH VALVE

The solenoid switch valve controls line pressure from the LR/CC solenoid. In one position, it allows the low/reverse clutch to be pressurized. In the other, it directs line pressure to the converter control and converter clutch valves.

DESCRIPTION AND OPERATION (Continued)

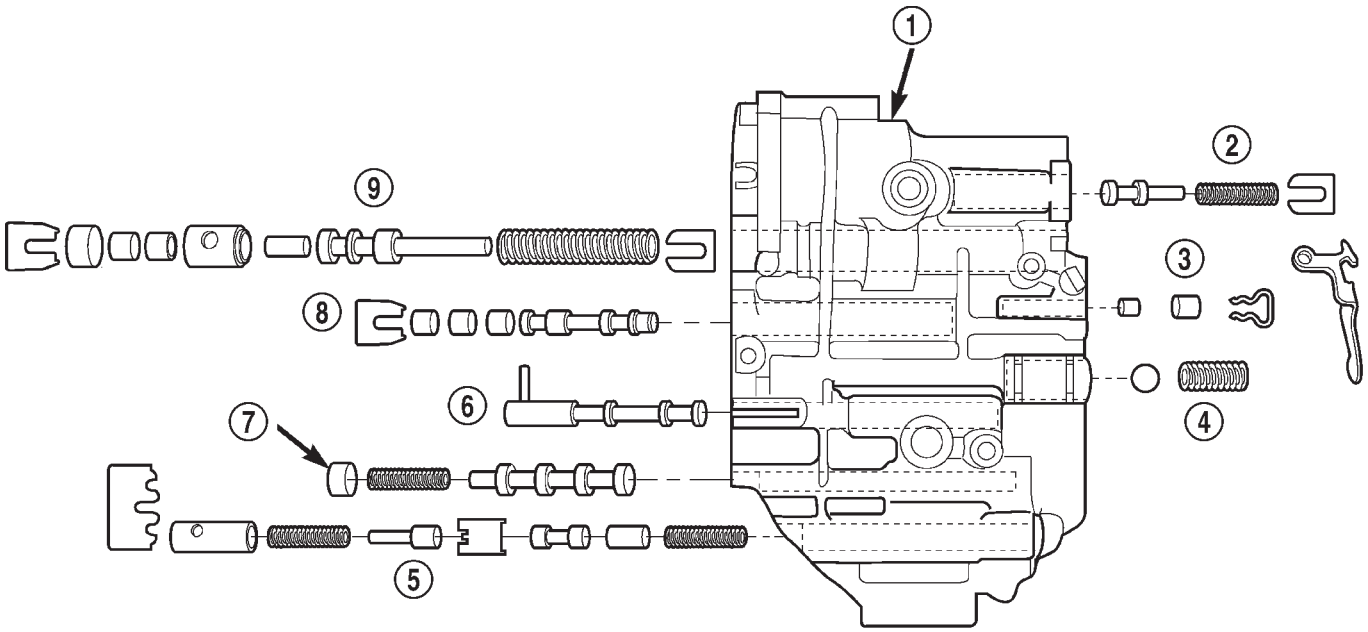

80bdbd80

Fig. 5 Valve Body Assembly

1 – VALVE BODY
2 – T/C REGULATOR VALVE
3 – L/R SWITCH VALVE
4 – VENT RESERVOIR CHECK VALVE
5 – CONVERTER CLUTCH CONTROL VALVE
6 – MANUAL VALVE
7 – CONVERTER CLUTCH SWITCH VALVE
8 – SOLENOID SWITCH VALVE
9 – REGULATOR VALVE

MANUAL VALVE

The manual valve is operated by the mechanical shift linkage. Its primary responsibility is to send line pressure to the appropriate hydraulic circuits and solenoids. The valve has three operating ranges or positions.

CONVERTER CLUTCH SWITCH VALVE

The main responsibility of the converter clutch switch valve is to control hydraulic pressure applied to the front (off) side of the converter clutch piston. Line pressure from the regulator valve is fed to the torque converter regulator valve, where it passes through the valve, and is slightly regulated. The pressure is then directed to the converter clutch switch valve and to the front side of the converter clutch piston. This pressure pushes the piston back and disengages the converter clutch.

CONVERTER CLUTCH CONTROL VALVE

The converter clutch control valve controls the back (on) side of the torque converter clutch. When the TCM energizes or modulates the LR/CC solenoid to apply the converter clutch piston, both the converter clutch control valve and the converter control valve move, allowing pressure to be applied to the back side of the clutch.

T/C REGULATOR VALVE

The torque converter regulator valve slightly regulates the flow of fluid to the torque converter.

LOW/REVERSE SWITCH VALVE

The low/reverse clutch is applied from different sources, depending on whether low (1st) gear or reverse is selected. The low/reverse switch valve alternates positions depending on from which direction fluid pressure is applied. By design, when the valve is shifted by fluid pressure from one channel, the opposing channel is blocked. The switch valve alienates the possibility of a sticking ball check, thus providing consistent application of the low/reverse clutch under all operating conditions.

VENT RESERVOIR CHECK VALVE

The vent reservoir check valve is designed for quick venting during garage shifts to prevent the overdrive and reverse clutches from dragging. Inadvertent motion of the reverse/overdrive (push/pull) piston can be caused by the unbalanced centrifugal forces in the reverse and overdrive chambers. By linking the overdrive and reverse vents to the vent reservoir at the manual valve, an equal residual pressure will be maintained, thus balancing the centrifugal forces in the reverse and the overdrive chambers.

DESCRIPTION AND OPERATION (Continued)

ACCUMULATORS

DESCRIPTION

The 41te underdrive, overdrive, low/reverse, and 2/4 clutch hydraulic circuits each contain an accumulator. An accumulator typically consists of a piston, seals, return spring(s), and a cover or plug. The overdrive and underdrive accumulators are located within the transaxle case, and are retained by the valve body (Fig. 6).

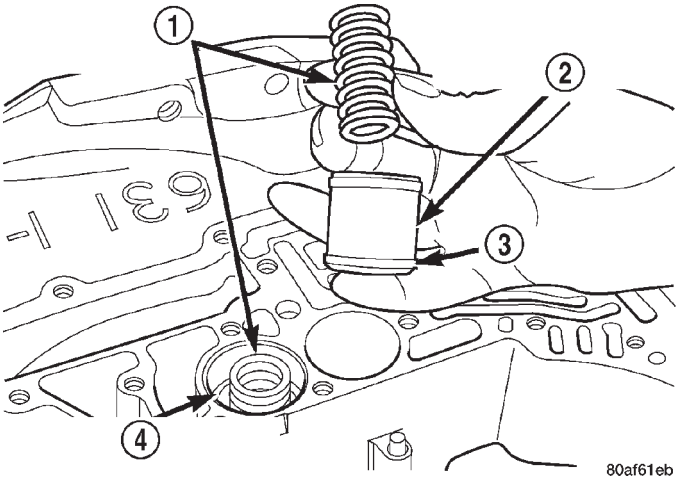

Fig. 6 Underdrive and Overdrive Accumulators

1 – RETURN SPRING
2 – UNDERDRIVE CLUTCH ACCUMULATOR
3 – SEAL RING (2)
4 – OVERDRIVE CLUTCH ACCUMULATOR

The low reverse accumulator (Fig. 7) is also located within the transaxle case, but the assembly is retained by a cover and a snap-ring.

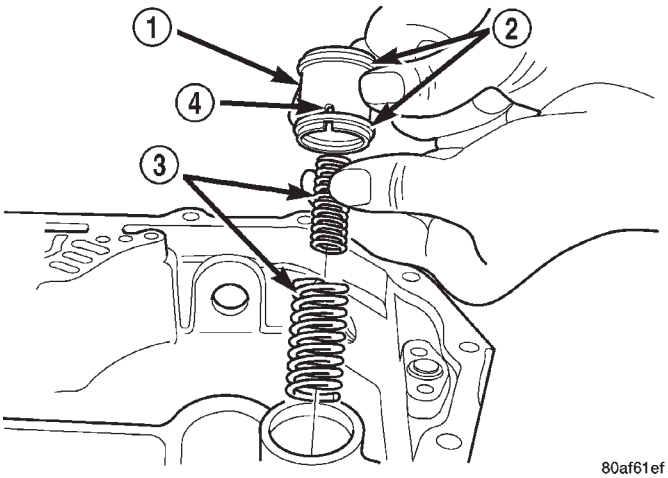

Fig. 7 Low/Reverse Accumulator Assembly

1 – ACCUMULATOR PISTON
2 – SEAL RINGS
3 – RETURN SPRINGS
4 – (NOTE NOTCH)

The 2/4 accumulator is located in the valve body. It is retained by a cover and retaining screws (Fig. 8).

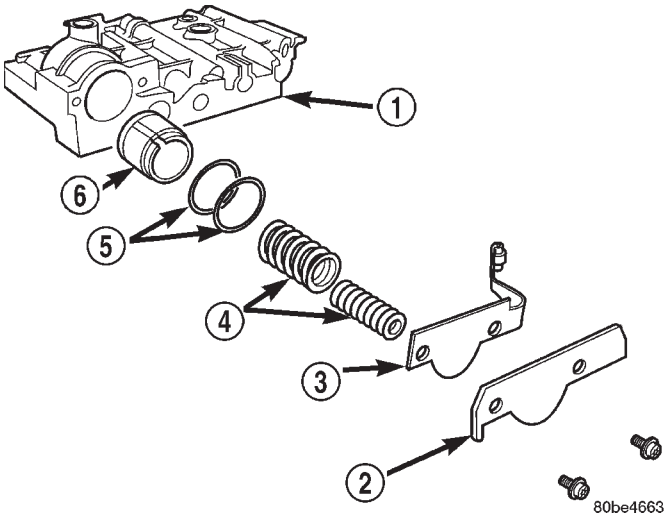

Fig. 8 2/4 Accumulator Assembly

1 – VALVE BODY
2 – RETAINER PLATE
3 – DETENT SPRING
4 – SPRINGS
5 – SEALS
6 – PISTON

OPERATION

The function of an accumulator is to cushion the application of a frictional clutch element. When pressurized fluid is applied to a clutch circuit, the application force is dampened by fluid collecting in the respective accumulator chamber against the piston and spring(s). The intended result is a smooth, firm clutch application.

INPUT CLUTCHES

DESCRIPTION

Three hydraulically applied input clutches are used to drive planetary components. The underdrive, overdrive, and reverse clutches are considered input clutches and are contained within the input clutch assembly (Fig. 9). The input clutch assembly also contains:

- Input shaft
- Input hub
- Clutch retainer
- Underdrive piston
- Overdrive/reverse piston
- Overdrive hub
- Underdrive hub

OPERATION

The three input clutches are responsible for driving different components of the planetary geartrain.

DESCRIPTION AND OPERATION (Continued)

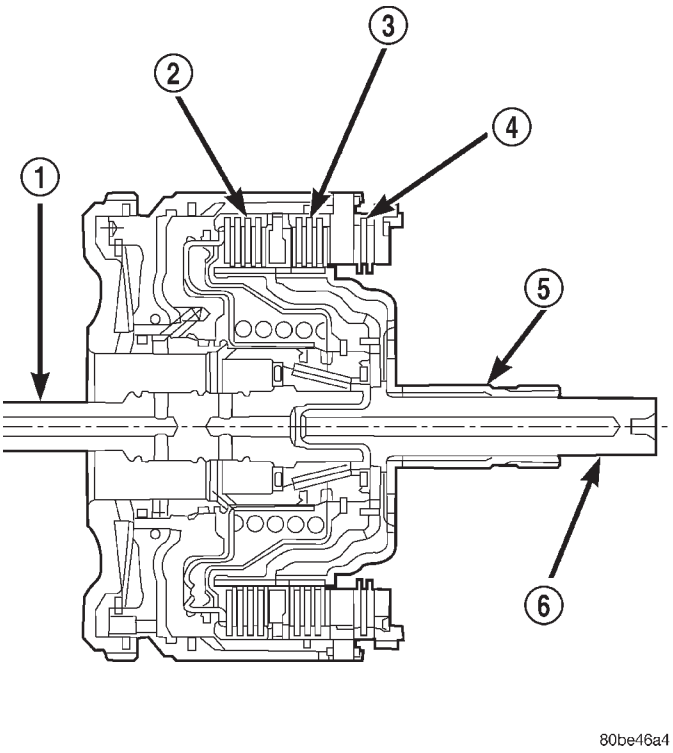

Fig. 9 Input Clutch Assembly

1 – INPUT SHAFT
2 – UNDERDRIVE CLUTCH
3 – OVERDRIVE CLUTCH
4 – REVERSE CLUTCH
5 – OVERDRIVE SHAFT
6 – UNDERDRIVE SHAFT

NOTE: Refer to the "Elements In Use" chart in Diagnosis and Testing for a collective view of which clutch elements are applied at each position of the selector lever.

UNDERDRIVE CLUTCH

The underdrive clutch is hydraulically applied in first, second, and third (direct) gears by pressurized fluid against the underdrive piston. When the underdrive clutch is applied, the underdrive hub drives the rear sun gear.

OVERDRIVE CLUTCH

The overdrive clutch is hydraulically applied in third (direct) and overdrive gears by pressurized fluid against the overdrive/reverse piston. When the overdrive clutch is applied, the overdrive hub drives the front planet carrier.

REVERSE CLUTCH

The reverse clutch is hydraulically applied in reverse gear only by pressurized fluid against the overdrive/reverse piston. When the reverse clutch is applied, the front sun gear assembly is driven.

HOLDING CLUTCHES

DESCRIPTION

Two hydraulically applied multi-disc clutches are used to hold planetary geartrain components stationary while the input clutches drive others. The 2/4 and Low/Reverse clutches are considered holding clutches and are contained at the rear of the transaxle case. (Fig. 10).

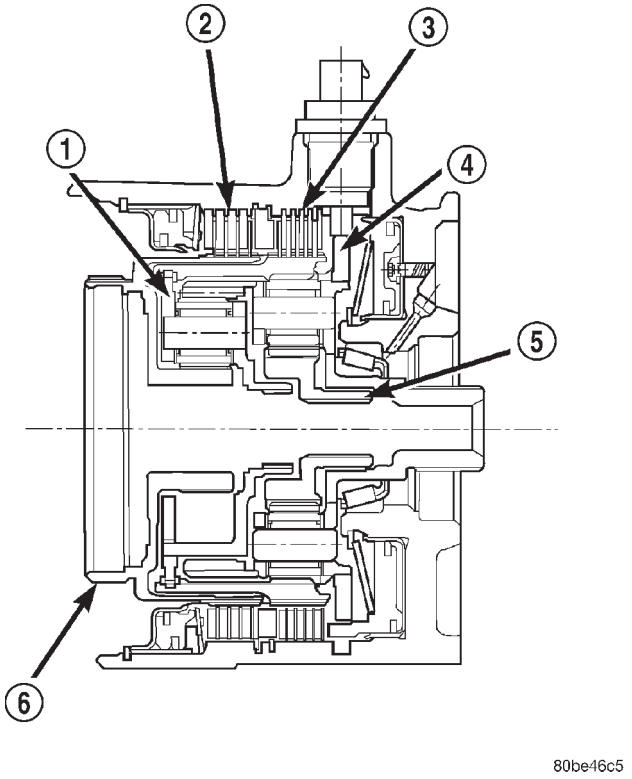

Fig. 10 2/4 and Low/Reverse Clutches

1 – FRONT PLANET CARRIER/REAR ANNULUS
2 – 2/4 CLUTCH
3 – L/R CLUTCH
4 – REAR PLANET CARRIER/FRONT ANNULUS
5 – REAR SUN GEAR
6 – FRONT SUN GEAR ASSEMBLY

OPERATION

NOTE: Refer to the "Elements In Use" chart in Diagnosis and Testing for a collective view of which clutch elements are applied at each position of the selector lever.

2/4 CLUTCH

The 2/4 clutch is hydraulically applied in second and fourth gears by pressurized fluid against the 2/4 clutch piston. When the 2/4 clutch is applied, the front sun gear assembly is held or grounded to the transaxle case.

DESCRIPTION AND OPERATION (Continued)

LOW/REVERSE CLUTCH

The Low/Reverse clutch is hydraulically applied in park, reverse, neutral, and first gears by pressurized fluid against the Low/Reverse clutch piston. When the Low/Reverse clutch is applied, the front planet carrier/rear annulus assembly is held or grounded to the transaxle case.

PLANETARY GEARTRAIN

DESCRIPTION

The planetary geartrain is located between the input clutch assembly and the rear of the transaxle case. The planetary geartrain consists of two sun gears, two planetary carriers, two annulus (ring) gears, and one output shaft (Fig. 11).

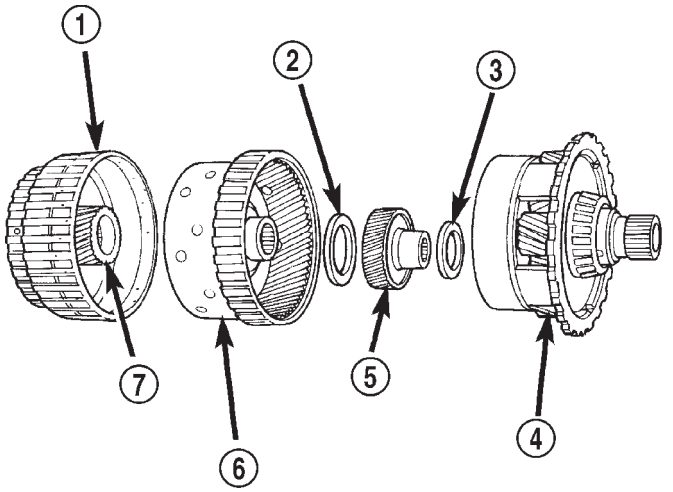

Fig. 11 Planetary Geartrain

1 – FRONT SUN GEAR ASSEMBLY
2 – #6 THRUST BEARING
3 – #7 THRUST BEARING
4 – REAR CARRIER FRONT ANNULUS ASSEMBLY
5 – REAR SUN GEAR
6 – FRONT CARRIER REAR ANNULUS ASSEMBLY
7 – FRONT SUN GEAR

OPERATION

The planetary geartrain utilizes two planetary gear sets that connect the transmission input shaft to the output shaft. Input and holding clutches drive or lock different planetary members to change output ratio or direction.

DIFFERENTIAL

DESCRIPTION

The 41TE differential is a conventional open design. It consists of a ring gear and a differential case. The differential case consists of pinion and side gears, and a pinion shaft. The differential case is supported in the transaxle by tapered roller bearings (Fig. 12).

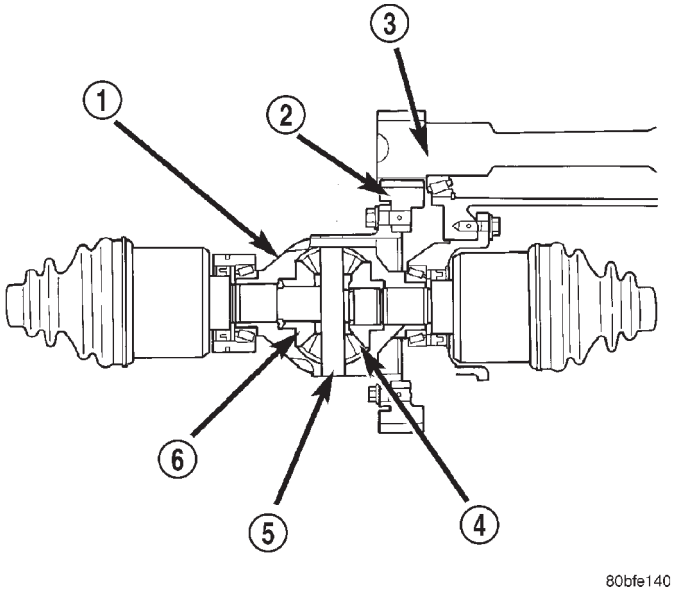

Fig. 12 Differential Assembly

1 – DIFFERENTIAL CASE
2 – RING GEAR
3 – TRANSFER SHAFT
4 – PINION GEAR
5 – PINION SHAFT
6 – SIDE GEAR

OPERATION

The differential assembly is driven by the transfer shaft by way of the differential ring gear. The ring gear drives the differential case, and the case drives the driveshafts through the differential gears. The differential pinion and side gears are supported in the case by thrust washers and a pinion shaft. Differential pinion and side gears make it possible for front tires to rotate at different speeds while cornering.

DESCRIPTION AND OPERATION (Continued)

TRANSMISSION CONTROL MODULE

DESCRIPTION

The Transmission Control Module (TCM) is located behind the left fender and is fastened to the left frame rail forward of the suspension (Fig. 13). It mounts on a bracket that is fastened to the rail.

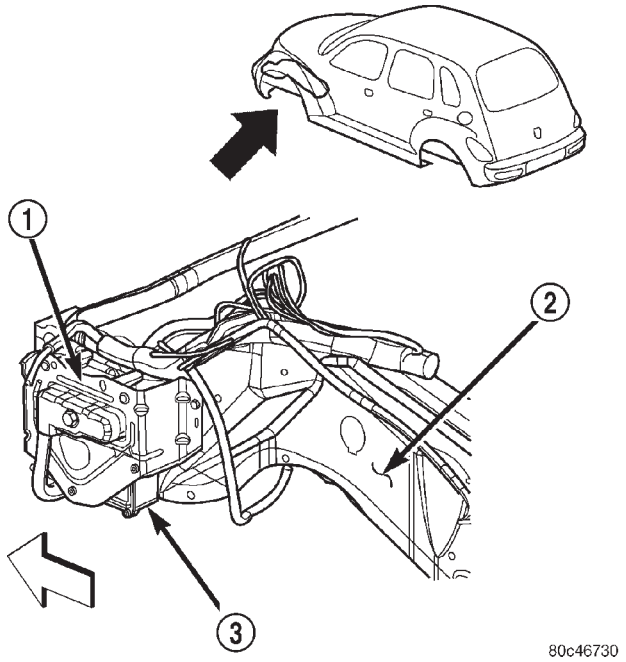

Fig. 13 Transmission Control Module (TCM) Location

1 – BRACKET
2 – LEFT RAIL
3 – TRANSMISSION CONTROL MODULE (TCM)

OPERATION

The TCM is the controlling unit for all electronic operations of the transaxle. The TCM receives information regarding vehicle operation from both direct and indirect inputs, and selects the operational mode of the transaxle. Direct inputs are hardwired to, and used specifically by the TCM. Indirect inputs originate from other components/modules, and are shared with the TCM via the communication bus.

Some examples of **direct inputs** to the TCM are:

- Battery (B+) voltage
- Ignition “ON” voltage
- Transmission Control Relay (Switched B+)
- Throttle Position Sensor
- Crankshaft Position Sensor (CKP)
- Transmission Range Sensor (TRS)
- Pressure Switches (L/R, 2/4, OD)
- Transmission Temperature Sensor (Integral to TRS)
- Input Shaft Speed Sensor
- Output Shaft Speed Sensor

Some examples of **indirect inputs** to the TCM are:

- Engine/Body Identification
- Manifold Pressure
- Target Idle
- Torque Reduction Confirmation
- Speed Control ON/OFF Switch
- Engine Coolant Temperature
- Ambient/Battery Temperature
- Brake Switch Status
- DRB Communication

Based on the information received from these various inputs, the TCM determines the appropriate shift schedule and shift points, depending on the present operating conditions and driver demand. This is possible through the control of various direct and indirect outputs.

Some examples of TCM **direct outputs** are:

- Transmission Control Relay
- Solenoids (LR/CC, 2/4, OD and UD)
- Vehicle Speed (to PCM)
- Torque Reduction Request (to PCM)

An example of a TCM **indirect outputs** is:

- Transmission Temperature (to PCM)

In addition to monitoring inputs and controlling outputs, the TCM has other important responsibilities and functions:

- Storing and maintaining Clutch Volume Indices (CVI)
- Storing and selecting appropriate Shift Schedules
- System self-diagnostics
- Diagnostic capabilities (with DRB scan tool)

NOTE: If the TCM has been replaced, the Quick Learn AND Pinion Factor procedures must be performed. Refer to Service Procedures for proper procedures.

CLUTCH VOLUME INDEX (CVI)

An important function of the TCM is to monitor Clutch Volume Index (CVI). CVIs represent the volume of fluid needed to compress a clutch pack.

The TCM monitors gear ratio changes by monitoring the Input and Output Speed Sensors. The Input, or Turbine Speed Sensor sends an electrical signal to the TCM that represents input shaft rpm. The Output Speed Sensor provides the TCM with output shaft speed information.

By comparing the two inputs, the TCM can determine transaxle gear ratio. This is important to the CVI calculation because the TCM determines CVIs by monitoring how long it takes for a gear change to occur (Fig. 14).

DESCRIPTION AND OPERATION (Continued)

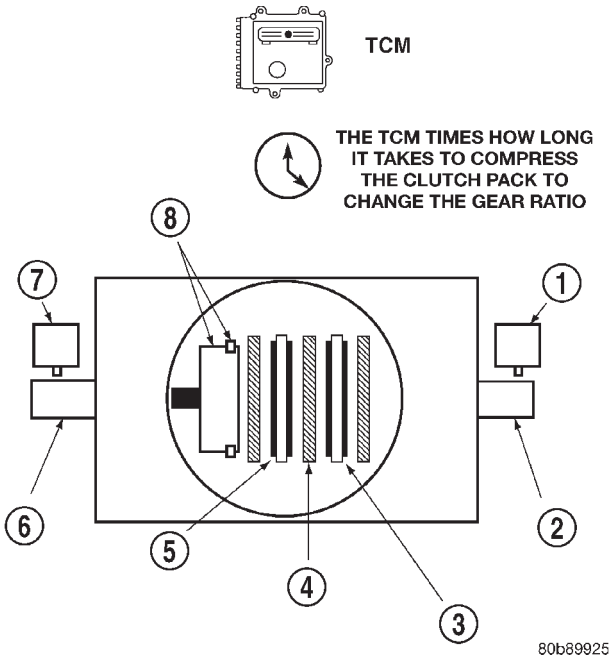

Fig. 14 Example of CVI Calculation

1 – OUTPUT SPEED SENSOR
2 – OUTPUT SHAFT
3 – CLUTCH PACK
4 – SEPARATOR PLATE
5 – FRICTION DISCS
6 – INPUT SHAFT
7 – INPUT SPEED SENSOR
8 – PISTON AND SEAL

Gear ratios can be determined by using the DRB Scan Tool and reading the Input/Output Speed Sensor values in the “Monitors” display. Gear ratio can be obtained by dividing the Input Speed Sensor value by the Output Speed Sensor value.

For example, if the input shaft is rotating at 1000 rpm and the output shaft is rotating at 500 rpm, then the TCM can determine that the gear ratio is 2:1. In direct drive (3rd gear), the gear ratio changes to 1:1. The gear ratio changes as clutches are applied and released. By monitoring the length of time it takes for the gear ratio to change following a shift request, the TCM can determine the volume of fluid used to apply or release a friction element.

The volume of transmission fluid needed to apply the friction elements are continuously updated for adaptive controls. As friction material wears, the volume of fluid need to apply the element increases.

Certain mechanical problems within the clutch assemblies (broken return springs, out of position snap rings, excessive clutch pack clearance, improper assembly, etc.) can cause inadequate or out-of-range clutch volumes. Also, defective Input/Output Speed Sensors and wiring can cause these conditions. The following chart identifies the appropriate clutch volumes and when they are monitored/updated:

CLUTCH VOLUMES				
Clutch	When Updated			Proper Clutch Volume
	Shift Sequence	Oil Temperature	Throttle Angle	
L/R	2-1 or 3-1 coast downshift	> 70°	< 5°	35 to 83
2/4	1-2 shift	> 110°	5 - 54°	20 to 77
OD	2-3 shift			48 to 150
UD	4-3 or 4-2 shift		> 5°	24 to 70

SHIFT SCHEDULES

As mentioned earlier, the TCM has programming that allows it to select a variety of shift schedules. Shift schedule selection is dependent on the following:

- Shift lever position
- Throttle position
- Engine load
- Fluid temperature
- Software level

As driving conditions change, the TCM appropriately adjusts the shift schedule. Refer to the following chart to determine the appropriate operation expected, depending on driving conditions.

DESCRIPTION AND OPERATION (Continued)

Schedule	Condition	Expected Operation
Extreme Cold	Oil temperature at start-up below -16° F	Park, Reverse, Neutral and 2nd gear only (prevents shifting which may fail a clutch with frequent shifts)
Cold	Oil temperature at start-up above -12° F and below 36° F	– Delayed 2-3 upshift (approximately 22-31 mph) – Delayed 3-4 upshift (45-53 mph) – Early 4-3 costdown shift (approximately 30 mph) – Early 3-2 coastdown shift (approximately 17 mph) – High speed 4-2, 3-2, 2-1 kickdown shifts are prevented – No EMCC
Warm	Oil temperature at start-up above 36° F and below 80 degree F	– Normal operation (upshift, kickdowns, and coastdowns) – No EMCC
Hot	Oil temperature at start-up above 80° F	– Normal operation (upshift, kickdowns, and coastdowns) – Full EMCC, no PEMCC except to engage FEMCC (except at closed throttle at speeds above 70-83 mph)
Overheat	Oil temperature above 240° F or engine coolant temperature above 244° F	– Delayed 2-3 upshift (25-32 mph) – Delayed 3-4 upshift (41-48 mph) – 3rd gear FEMCC from 30-48 mph – 3rd gear PEMCC from 27-31 mph
Super Overheat	Oil temperature above 260° F	– All “Overheat” shift schedule features apply – 2nd gear PEMCC above 22 mph – Above 22 mph the torque converter will not unlock unless the throttle is closed or if a wide open throttle 2nd PEMCC to 1 kickdown is made

TRANSMISSION CONTROL RELAY

DESCRIPTION

The transmission control relay is located in the Power Distribution Center (PDC) on the left side of the engine compartment between the brake master cylinder and the air cleaner assembly (Fig. 15).

OPERATION

The relay is supplied fused B+ voltage, energized by the TCM, and is used to supply power to the solenoid pack when the transmission is in normal operating mode. When the relay is “off”, no power is supplied to the solenoid pack and the transmission is in “limp-in” mode. After a controller reset (ignition key turned to the “run” position or after cranking engine), the TCM energizes the relay. Prior to this, the TCM verifies that the contacts are open by checking for no voltage at the switched battery terminals. After this is verified, the voltage at the solenoid pack pressure switches is checked. After the relay is energized, the TCM monitors the terminals to verify that the voltage is greater than 3 volts.

SOLENOID/PRESSURE SWITCH ASSEMBLY

DESCRIPTION

The Solenoid/Pressure Switch Assembly (Fig. 16) is external to the transaxle and mounted to the transaxle case. The assembly consists of four solenoids that control hydraulic pressure to the LR/CC, 2/4, OD, and UD friction elements. The reverse clutch is controlled by line pressure from the manual valve in the valve body. The solenoids are contained within the Solenoid/Pressure Switch Assembly, and can only be serviced by replacing the assembly.

The solenoid assembly also contains pressure switches that monitor and send hydraulic circuit information to the TCM. Likewise, the pressure switches can only be service by replacing the assembly.

DESCRIPTION AND OPERATION (Continued)

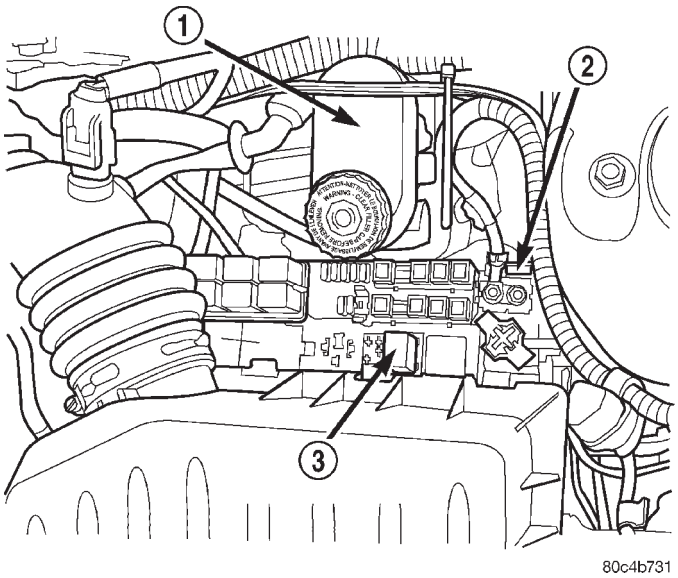

Fig. 15 Transmission Control Relay Location

1 – MASTER CYLINDER
2 – POWER DISTRIBUTION CENTER (PDC)
3 – TRANSMISSION CONTROL RELAY

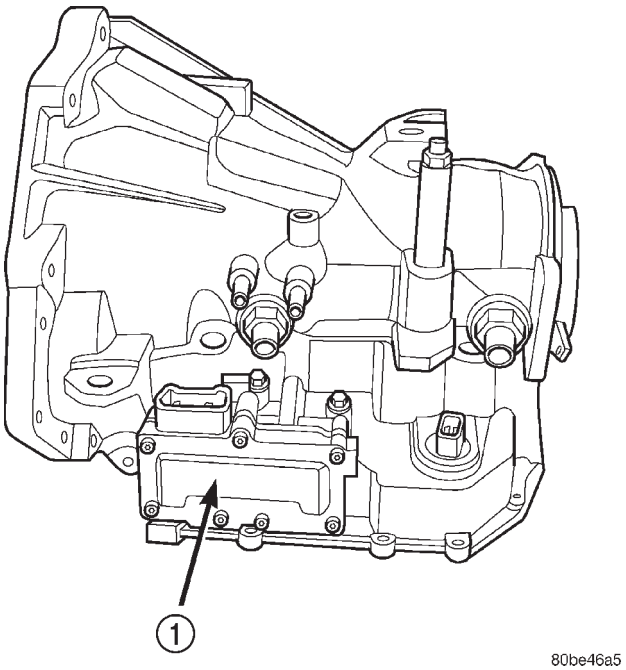

Fig. 16 Solenoid/Pressure Switch Assembly

1 – SOLENOID AND PRESSURE SWITCH ASSEMBLY

OPERATION

SOLENOIDS

The solenoids receive electrical power from the Transmission Control Relay through a single wire. The TCM energizes or operates the solenoids individually by grounding the return wire of the solenoid needed. When a solenoid is energized, the solenoid valve shifts, and a fluid passage is opened or closed (vented or applied), depending on its default operating state. The result is an apply or release of a frictional element.

The 2/4 and UD solenoids are normally applied, which by design allow fluid to pass through in their relaxed or “off” state. This allows transaxle limp-in (P,R,N,2) in the event of an electrical failure.

The continuity of the solenoids and circuits are periodically tested. Each solenoid is turned on or off depending on its current state. An inductive spike should be detected by the TCM during this test. It no spike is detected, the circuit is tested again to verify the failure. In addition to the periodic testing, the solenoid circuits are tested if a speed ratio or pressure switch error occurs.

PRESSURE SWITCHES

The TCM relies on three pressure switches to monitor fluid pressure in the L/R, 2/4, and OD hydraulic circuits. The primary purpose of these switches is to help the TCM detect when clutch circuit hydraulic failures occur. The range for the pressure switch closing and opening points is 11-23 psi. Typically the switch opening point will be approximately one psi lower than the closing point. For example, a switch may close at 18 psi and open at 17 psi. The switches are continuously monitored by the TCM for the correct states (open or closed) in each gear as shown in the following chart:

PRESSURE SWITCH STATES

GEAR	L/R	2/4	OD
R	OP	OP	OP
P/N	CL	OP	OP
1st	CL	OP	OP
2nd	OP	CL	OP
D	OP	OP	CL
OD	OP	CL	CL

OP = OPEN

CL = CLOSED

A Diagnostic Trouble Code (DTC) will set if the TCM senses any switch open or closed at the wrong time in a given gear.

The TCM also tests the 2/4 and OD pressure switches when they are normally off (OD and 2/4 are tested in 1st gear, OD in 2nd gear, and 2/4 in 2nd gear). The test simply verifies that they are operational, by looking for a closed state when the corresponding element is applied. Immediately after a shift into 1st, 2nd, or 3rd gear with the engine speed

DESCRIPTION AND OPERATION (Continued)

above 1000 rpm, the TCM momentarily turns on element pressure to the 2/4 and/or OD clutch circuits to identify that the appropriate switch has closed. If it doesn't close, it is tested again. If the switch fails to close the second time, the appropriate Diagnostic Trouble Code (DTC) will set.

TRANSMISSION RANGE SENSOR

DESCRIPTION

The Transmission Range Sensor (TRS) is mounted to the top of the valve body inside the transaxle and can only be serviced by removing the valve body. The electrical connector extends through the transaxle case (Fig. 17).

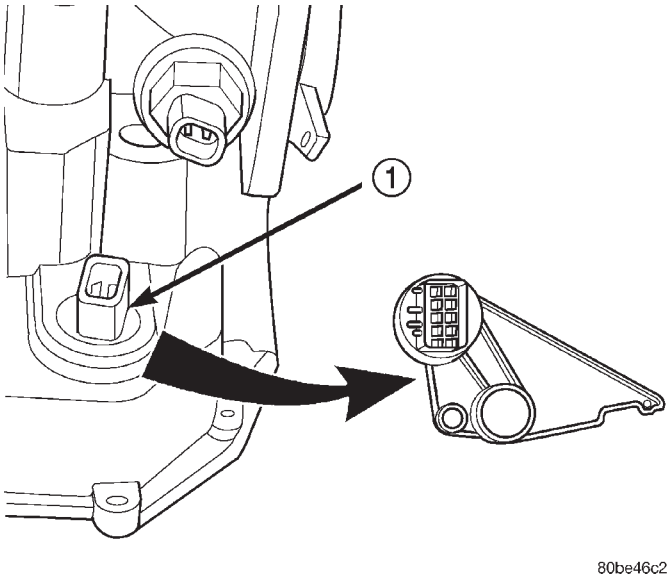

Fig. 17 Transmission Range Sensor (TRS) Location

1 – TRANSMISSION RANGE SENSOR

The Transmission Range Sensor (TRS) has four switch contacts that monitor shift lever position and send the information to the TCM.

The TRS also has an integrated temperature sensor (thermistor) that communicates transaxle temperature to the TCM and PCM (Fig. 18).

OPERATION

The Transmission Range Sensor (TRS) (Fig. 17) communicates shift lever position (SLP) to the TCM as a combination of open and closed switches. Each shift lever position has an assigned combination of switch states (open/closed) that the TCM receives from four sense circuits. The TCM interprets this information and determines the appropriate transaxle gear position and shift schedule.

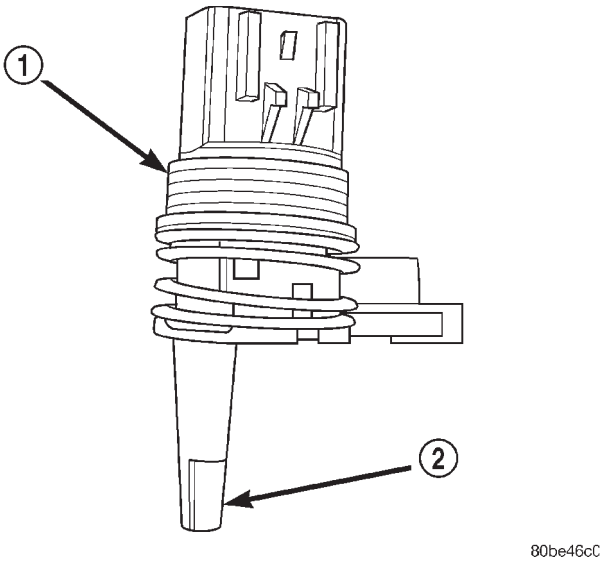

Fig. 18 Transmission Temperature Sensor

1 – TRANSMISSION RANGE SENSOR
2 – TEMPERATURE SENSOR

Since there are four switches, there are 16 possible combinations of open and closed switches (codes). Seven of these codes are related to gear position and three are recognized as "between gear" codes. This results in six codes which should never occur. These are called "invalid" codes. An invalid code will result in a DTC, and the TCM will then determine the shift lever position based on pressure switch data. This allows reasonably normal transmission operation with a TRS failure.

TRS SWITCH STATES

SLP	T42	T41	T3	T1
P	CL	CL	CL	OP
R	CL	OP	OP	OP
N	CL	CL	OP	CL
OD	OP	OP	OP	CL
3	OP	OP	CL	OP
L	CL	OP	CL	CL

TRANSMISSION TEMPERATURE SENSOR

The TRS has an integrated thermistor (Fig. 18) that the TCM uses to monitor the transmission's sump temperature. Since fluid temperature can affect transmission shift quality and convertor lock up, the TCM requires this information to determine which shift schedule to operate in. The PCM also monitors this temperature data so it can energize the vehicle cooling fan(s) when a transmission "overheat" condition exists. If the thermistor circuit fails, the TCM will revert to calculated oil temperature usage.

DESCRIPTION AND OPERATION (Continued)

CALCULATED TEMPERATURE

A failure in the temperature sensor or circuit will result in calculated temperature being substituted for actual temperature. Calculated temperature is a predicted fluid temperature which is calculated from a combination of inputs:

- Battery (ambient) temperature
- Engine coolant temperature
- In-gear run time since start-up

INPUT SPEED SENSOR

DESCRIPTION

The Input Speed Sensor is a two-wire magnetic pickup device that generates AC signals as rotation occurs. It is threaded into the transaxle case (Fig. 19), sealed with an o-ring (Fig. 20), and is considered a primary input to the Transmission Control Module (TCM).

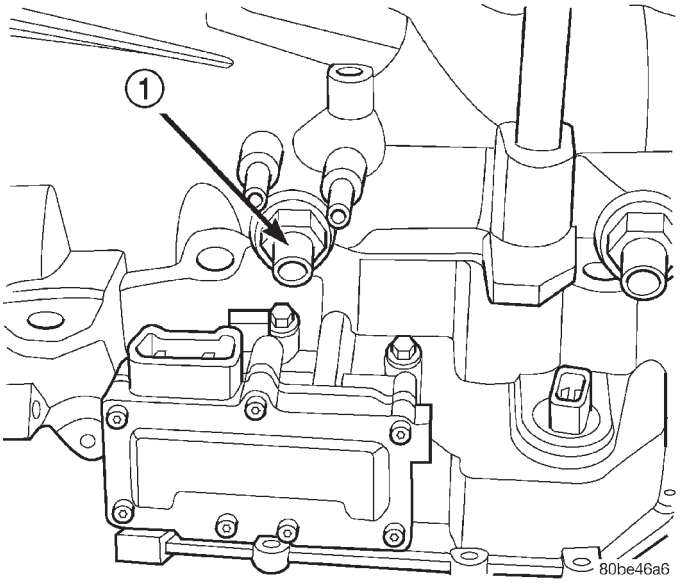

Fig. 19 Input Speed Sensor Location

1 – INPUT SPEED SENSOR

OPERATION

The Input Speed Sensor provides information on how fast the input shaft is rotating. As the teeth of the input clutch hub pass by the sensor coil (Fig. 21), an AC voltage is generated and sent to the TCM. The TCM interprets this information as input shaft rpm.

The TCM compares the input speed signal with output speed signal to determine the following:

- Transmission gear ratio

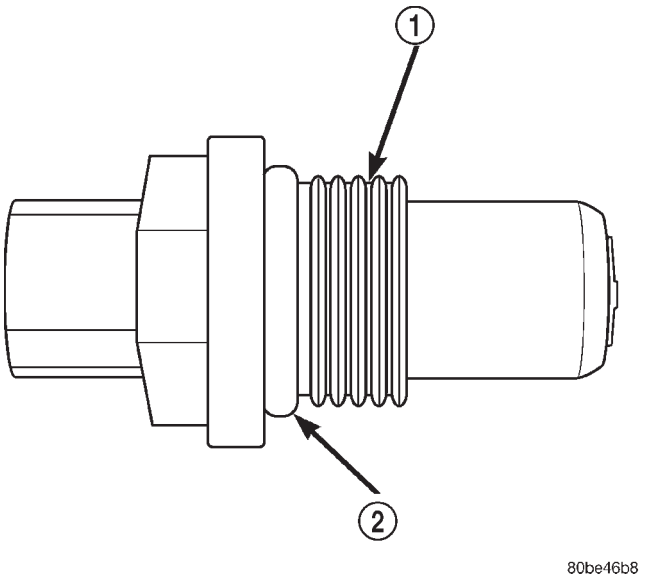

Fig. 20 O-Ring Location

1 – INPUT SPEED SENSOR
2 – O-RING

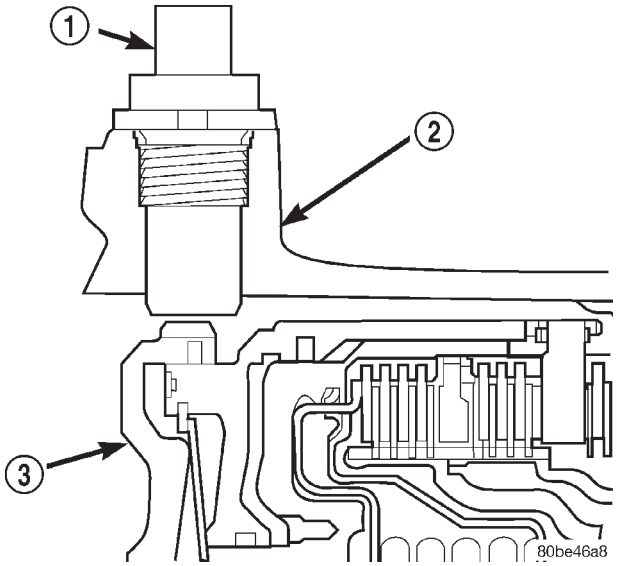

Fig. 21 Sensor Relation to Input Clutch Hub

1 – INPUT SPEED SENSOR
2 – TRANSAXLE CASE
3 – INPUT CLUTCH HUB

- Speed ratio error detection
- CVI calculation

The TCM also compares the input speed signal and the engine speed signal to determine the following:

- Torque converter clutch slippage
- Torque converter element speed ratio

DESCRIPTION AND OPERATION (Continued)

OUTPUT SPEED SENSOR

DESCRIPTION

The Output Speed Sensor is a two-wire magnetic pickup device that generates an AC signal as rotation occurs. It is threaded into the transaxle case (Fig. 22), sealed with an o-ring (Fig. 23), and is considered a primary input to the Transmission Control Module (TCM).

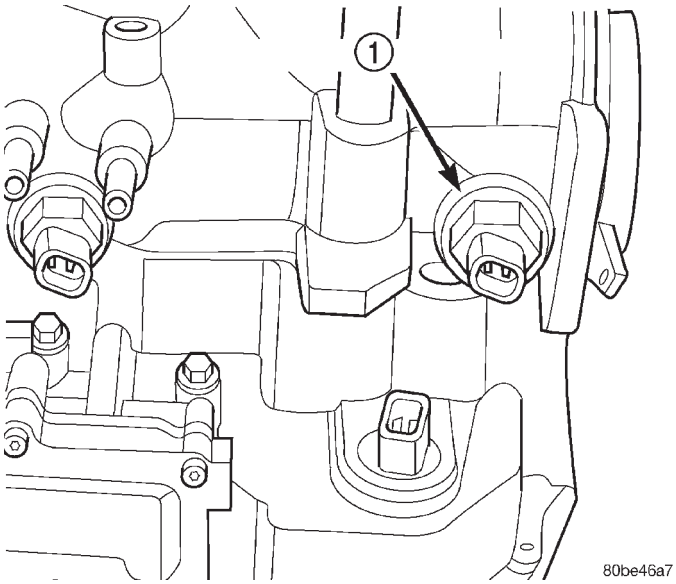

Fig. 22 Output Speed Sensor Location

1 – OUTPUT SPEED SENSOR

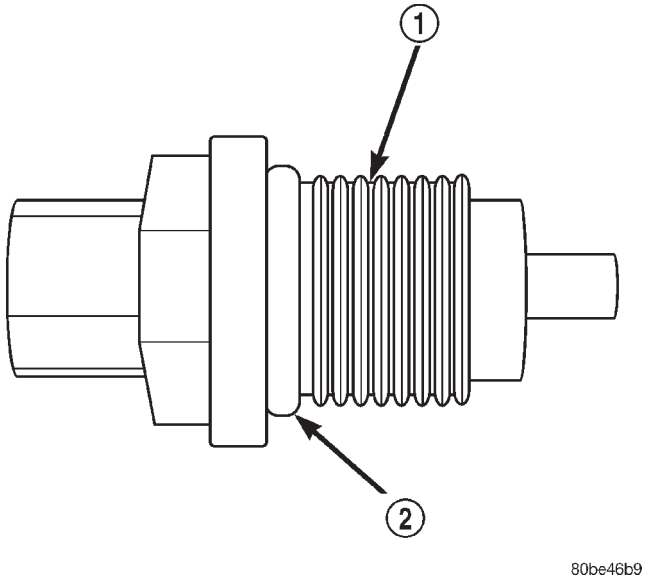

Fig. 23 O-Ring Location

1 – OUTPUT SPEED SENSOR
2 – O-RING

OPERATION

The Output Speed Sensor provides information on how fast the output shaft is rotating. As the rear planetary carrier park pawl lugs pass by the sensor coil (Fig. 24), an AC voltage is generated and sent to the TCM. The TCM interprets this information as output shaft rpm.

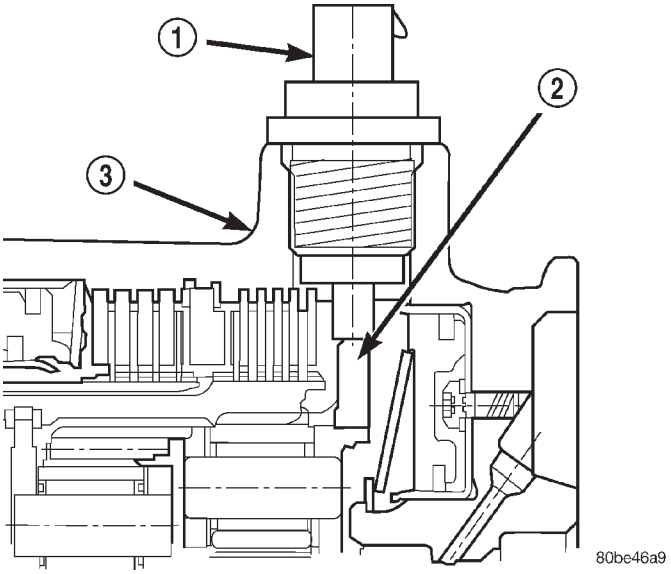

Fig. 24 Sensor Relation to Planet Carrier Park Pawl Lugs

1 – OUTPUT SPEED SENSOR
2 – REAR PLANET CARRIER/OUTPUT SHAFT ASSEMBLY
3 – TRANSAXLE CASE

The TCM compares the input and output speed signals to determine the following:

- Transmission gear ratio
- Speed ratio error detection
- CVI calculation

VEHICLE SPEED SIGNAL

The vehicle speed signal is taken from the Output Speed Sensor. The TCM converts this signal into a pulse per mile signal and sends it to the PCM. The PCM, in turn, sends the vehicle speed message across the communication bus to the BCM. The BCM sends this signal to the Instrument Cluster to display vehicle speed to the driver. The vehicle speed signal pulse is roughly 8000 pulses per mile.

BRAKE TRANSMISSION SHIFT INTERLOCK SYSTEM

DESCRIPTION

The Brake Transmission Shifter/Ignition Interlock (BTSI) is a cable and solenoid operated system that prevents the transmission gear shifter from being moved out of PARK without a driver in place.

DESCRIPTION AND OPERATION (Continued)

Refer to the following chart that expected shifter response, depending on ignition key/switch (Fig. 25) and brake pedal positions.

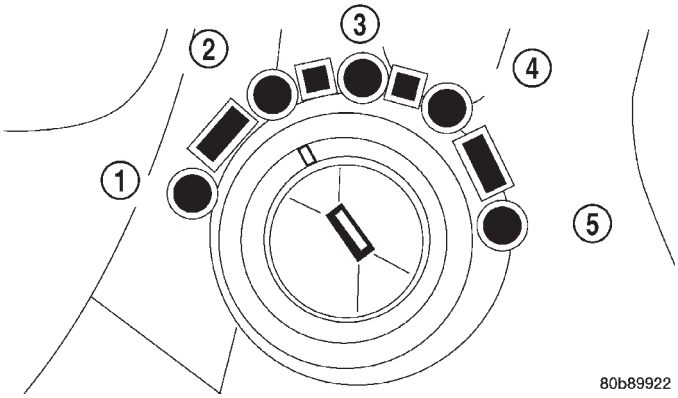

Fig. 25 Ignition Key/Switch Positions

1 – ACC
2 – LOCK
3 – OFF
4 – ON/RUN
5 – START

ACTION	EXPECTED RESPONSE
1. Turn key to the “OFF” position.	1. Shifter CAN be shifted out of park.
2. Turn key to the ″ON/RUN” position.	2. Shifter CANNOT be shifted out of park.
3. Turn key to the “ON/RUN” position and depress the brake pedal.	3. Shifter CAN be shifted out of park.
4. Leave shifter in any gear and try to return key to the “LOCK” or ″ACC” position.	4. Key cannot be returned to the “LOCK” or “ACC” position.
5. Return shifter to “PARK” and try to remove the key.	5. Key can be removed (after returning to “LOCK” position).
6. With the key removed, try to shift out of “PARK”.	6. Shifter cannot be shifted out of “PARK”.
NOTE: Any failure to meet these expected responses requires system adjustment or repair.	

OPERATION

The Brake Transmission Shifter/Ignition Interlock (BTSI) is engaged whenever the ignition switch is in the LOCK or ACCESSORY position (Fig. 25). An additional electrically activated feature will prevent shifting out of the PARK position unless the brake pedal is depressed at least one-half inch. A magnetic holding device integral to the interlock cable is energized when the ignition is in the ON/RUN position. When the key is in the ON/RUN position and the brake pedal is depressed, the shifter is unlocked and will move into any position. The interlock system also prevents the ignition switch from being turned to the LOCK or ACCESSORY position, unless the shifter is in the gated PARK position.

The following chart describes the normal operation of the Brake Transmission Shift Interlock (BTSI) system. If the “expected response” differs from the vehicle’s response, then system repair and/or adjustment is necessary.

DIAGNOSIS AND TESTING

41TE TRANSAXLE GENERAL DIAGNOSIS

NOTE: Before attempting any repair on a 41TE four-speed automatic transaxle, check for diagnostic trouble codes (DTC’s) using the DRB scan tool. Refer to the Transmission Diagnostic Procedures Manual.

Transaxle malfunctions may be caused by these general conditions:

- Poor engine performance
- Improper adjustments
- Hydraulic malfunctions
- Mechanical malfunctions
- Electronic malfunctions

Diagnosis of these problems should always begin by checking the easily accessible variables: fluid level and condition, gearshift cable adjustment. Then perform a road test to determine if the problem has been corrected or that more diagnosis is necessary. If the problem persists after the preliminary tests and corrections are completed, hydraulic pressure checks should be performed.

ROAD TEST

Prior to performing a road test, verify that the fluid level, fluid condition, and linkage adjustment have been approved.

During the road test, the transaxle should be operated in each position to check for slipping and any variation in shifting.

If the vehicle operates properly at highway speeds, but has poor acceleration, the converter stator overrunning clutch may be slipping. If acceleration is normal, but high throttle opening is needed to maintain highway speeds, the converter stator clutch may have seized. Both of these stator defects require replacement of the torque converter and thorough transaxle cleaning.

DIAGNOSIS AND TESTING (Continued)

Slipping clutches can be isolated by comparing the "Elements in Use" chart with clutch operation encountered on a road test. This chart identifies which clutches are applied at each position of the selector lever.

A slipping clutch may also set a DTC and can be determined by operating the transaxle in all selector positions.

ELEMENTS IN USE AT EACH POSITION OF SELECTOR LEVER

Shift Lever Position	INPUT CLUTCHES			HOLDING CLUTCHES	
	Underdrive	Overdrive	Reverse	2/4	Low/Reverse
P - PARK					X
R - REVERSE			X		X
N - NEUTRAL					X
OD - OVERDRIVE First	X				X
Second	X			X	
Direct	X	X			
Overdrive		X		X	
D - DRIVE* First	X				X
Second	X			X	
Direct	X	X			
L - LOW* First	X				X
Second	X			X	
Direct	X	X			
* Vehicle upshift and downshift speeds are increased when in these selector positions.					

The process of elimination can be used to detect any unit which slips and to confirm proper operation of good units. Road test analysis can diagnose slipping units, but the cause of the malfunction cannot be determined. Practically any condition can be caused by leaking hydraulic circuits or sticking valves.

HYDRAULIC PRESSURE TESTS

Pressure testing is a very important step in the diagnostic procedure. These tests usually reveal the cause of most hydraulic transaxle problems.

Before performing pressure tests, be certain that fluid level and condition, and shift cable adjustments have been checked and approved. Fluid must be at operating temperature (150 to 200 degrees F.).

Install an engine tachometer, raise vehicle on hoist which allows front wheels to turn, and position tachometer so it can be read.

Attach 300 psi gauge (C-3293SP) to port(s) required for test(s) being conducted. Use adapter set L-4559 to adapt gauge(s) to transaxle.

Test port locations are shown in (Fig. 26).

TEST ONE-SELECTOR IN LOW (1st GEAR)

(1) Attach pressure gauge to the low/reverse clutch tap.

(2) Move selector lever to the (L) position.

(3) Allow vehicle wheels to turn and increase throttle opening to achieve an indicated vehicle speed to 20 mph.

(4) Low/reverse clutch pressure should read 115 to 145 psi.

(5) This test checks pump output, pressure regulation and condition of the low/reverse clutch hydraulic circuit and shift schedule.

DIAGNOSIS AND TESTING (Continued)

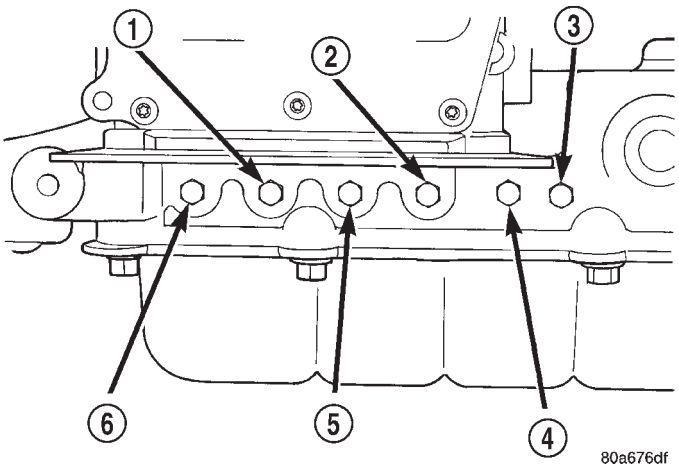

Fig. 26 Pressure Taps

1 – OVERDRIVE CLUTCH
2 – TORQUE CONVERTER OFF
3 – LOW/REVERSE CLUTCH
4 – 2/4 CLUTCH
5 – REVERSE CLUTCH
6 – UNDERDRIVE CLUTCH

TEST TWO-SELECTOR IN DRIVE (2nd GEAR)

NOTE: This test checks the underdrive clutch hydraulic circuit as well as the shift schedule.

(1) Attach gauge to the underdrive clutch tap.
(2) Move selector lever to the 3 position.
(3) Allow vehicle wheels to turn and increase throttle opening to achieve an indicated vehicle speed of 30 mph.
(4) In second gear the underdrive clutch pressure should read 110 to 145 psi.

TEST TWO A–SELECTOR IN OD (4th Gear)

NOTE: This test checks the underdrive clutch hydraulic circuit as well as the shift schedule.

(1) Attach gauge to the underdrive clutch tap.
(2) Move selector lever to the (OD) position.
(3) Allow wheels to rotate freely and increase throttle opening to achieve an indicated speed of 40 mph.
(4) Underdrive clutch pressure should read below 5 psi. If not, then either the solenoid assembly or TCM is at fault.

TEST THREE-OVERDRIVE CLUTCH CHECK (3rd and 2nd Gear)

(1) Attach gauge to the overdrive clutch tap.
(2) Move selector lever to the (OD) position.
(3) Allow vehicle wheels to turn and increase throttle opening to achieve an indicated vehicle speed of 20 mph. Vehicle should be in 3rd gear.
(4) Overdrive clutch pressure should read 74 to 95 psi.
(5) Move selector lever to the (3) position and increase indicated vehicle speed to 30 mph.
(6) The vehicle should be in second gear and overdrive clutch pressure should be less than 5 psi.
(7) This test checks the overdrive clutch hydraulic circuit as well as the shift schedule.

TEST FOUR-SELECTOR IN OVERDRIVE (4th Gear)

(1) Attach gauge to the 2/4 clutch tap.
(2) Move selector lever to the (OD) position.
(3) Allow vehicle front wheels to turn and increase throttle opening to achieve an indicated vehicle speed of 30 mph. Vehicle should be in 4th gear.
(4) The 2/4 clutch pressure should read 75 to 95 psi.
(5) This test checks the 2/4 clutch hydraulic circuit.

TEST FIVE-SELECTOR IN OVERDRIVE (4th Gear-CC on)

(1) Attach gauge to the torque converter clutch off pressure tap.
(2) Move selector lever to the (OD) position.
(3) Allow vehicle wheels to turn and increase throttle opening to achieve an indicated vehicle speed of 50 mph. Vehicle should be in 4th gear, CC on.

CAUTION: Both wheels must turn at the same speed.

(4) Torque converter clutch off pressure should be less than 5 psi.
(5) This test checks the torque converter clutch hydraulic circuit.

TEST SIX-SELECTOR IN REVERSE

(1) Attach gauges to the reverse and LR clutch tap.
(2) Move selector lever to the (R) position.
(3) Read reverse clutch pressure with output stationary (foot on brake) and throttle opened to achieve 1500 rpm.
(4) Reverse and LR clutch pressure should read 165 to 235 psi.
(5) This test checks the reverse clutch hydraulic circuit.

TEST RESULT INDICATIONS

(1) If proper line pressure is found in any one test, the pump and pressure regulator are working properly.

DIAGNOSIS AND TESTING (Continued)

(2) Low pressure in all positions indicates a defective pump, a clogged filter, or a stuck pressure regulator valve.

(3) Clutch circuit leaks are indicated if pressures do not fall within the specified pressure range.

(4) If the overdrive clutch pressure is greater than 5 psi in Step 4 of Test Three, a worn reaction shaft seal ring or a defective solenoid assembly is indicated.

(5) If the underdrive clutch pressure is greater than 5 psi in Step 4 of Test Two A, a defective solenoid assembly or TCM is the cause.

PRESSURE CHECK SPECIFICATIONS

Gear Selector Position	Actual Gear	Pressure Taps					
		Underdrive Clutch	Overdrive Clutch	Reverse Clutch	Torque Converter Clutch Off	2/4 Clutch	Low/ Reverse Clutch
Park * 0 mph	PARK	0-2	0-5	0-2	60-110	0-2	115-145
REVERSE * 0 mph	REVERSE	0-2	0-7	165-235	50-100	0-2	165-235
NEUTRAL * 0 mph	NEUTRAL	0-2	0-5	0-2	60-110	0-2	115-145
L # 20 mph	FIRST	110-145	0-5	0-2	60-110	0-2	115-145
3 # 30 mph	SECOND	110-145	0-5	0-2	60-110	115-145	0-2
3 # 45 mph	DIRECT	75-95	75-95	0-2	60-90	0-2	0-2
OD # 30 mph	OVERDRIVE	0-2	75-95	0-2	60-90	75-95	0-2
OD # 50 mph	OVERDRIVE WITH TCC	0-2	75-95	0-2	0-5	75-95	0-2

*** Engine speed at 1500 rpm**

 # CAUTION: Both front wheels must be turning at the same speed.

CLUTCH AIR PRESSURE TESTS

Inoperative clutches can be located using a series of tests by substituting air pressure for fluid pressure (Fig. 27) (Fig. 28). The clutches may be tested by applying air pressure to their respective passages. The valve body must be removed and Tool 6056 installed. To make air pressure tests, proceed as follows:

NOTE: The compressed air supply must be free of all dirt and moisture. Use a pressure of 30 psi.

Remove oil pan and valve body. See Valve body removal.

OVERDRIVE CLUTCH

Apply air pressure to the overdrive clutch apply passage and watch for the push/pull piston to move forward. The piston should return to its starting position when the air pressure is removed.

REVERSE CLUTCH

Apply air pressure to the reverse clutch apply passage and watch for the push/pull piston to move rearward. The piston should return to its starting position when the air pressure is removed.

DIAGNOSIS AND TESTING (Continued)

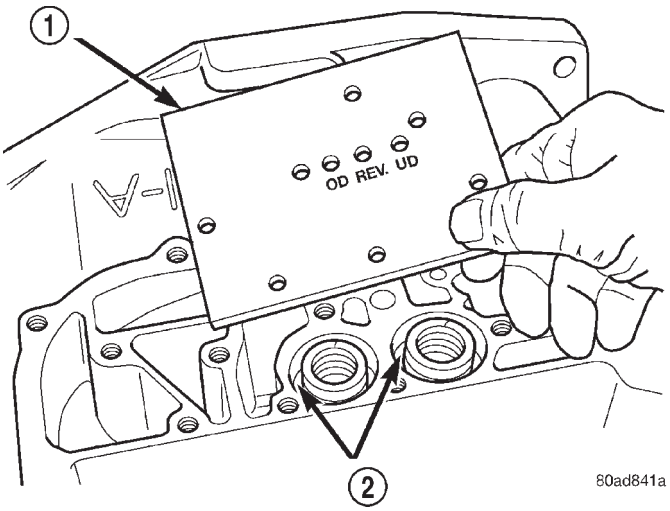

Fig. 27 Air Pressure Test Plate

1 – TOOL 6056
2 – ACCUMULATORS

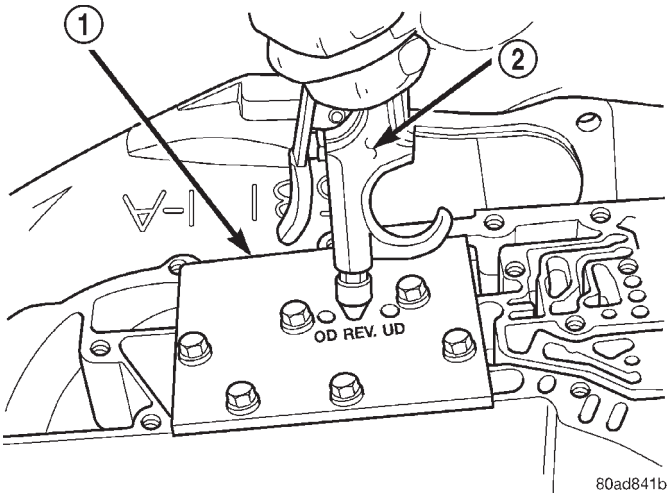

Fig. 28 Testing Reverse Clutch

1 – TOOL 6056
2 – AIR NOZZLE

2/4 CLUTCH

Apply air pressure to the feed hole located on the 2/4 clutch retainer. Look in the area where the 2/4 piston contacts the first separator plate and watch carefully for the 2/4 piston to move rearward. The piston should return to its original position after the air pressure is removed.

LOW/REVERSE CLUTCH

Apply air pressure to the low/reverse clutch feed hole (rear of case, between 2 bolt holes). Then, look in the area where the low/reverse piston contacts the first separator plate. Watch carefully for the piston to move forward. The piston should return to its original position after the air pressure is removed.

UNDERDRIVE CLUTCH

Because this clutch piston cannot be seen, its operation is checked by function. Air pressure is applied to the low/reverse and the 2/4 clutches. This locks the output shaft. Use a piece of rubber hose wrapped around the input shaft and a pair of clamp-on pliers to turn the input shaft. Next apply air pressure to the underdrive clutch. The input shaft should not rotate with hand torque. Release the air pressure and confirm that the input shaft will rotate.

FLUID LEAKAGE-TORQUE CONVERTER HOUSING AREA

When diagnosing converter housing fluid leaks, three actions must be taken before repair:

(1) Verify proper transmission fluid level.

(2) Verify that the leak originates from the converter housing area and is transmission fluid.

(3) Determine the true source of the leak.

Fluid leakage at or around the torque converter area may originate from an engine oil leak (Fig. 29). The area should be examined closely. Factory fill fluid is red and, therefore, can be distinguished from engine oil.

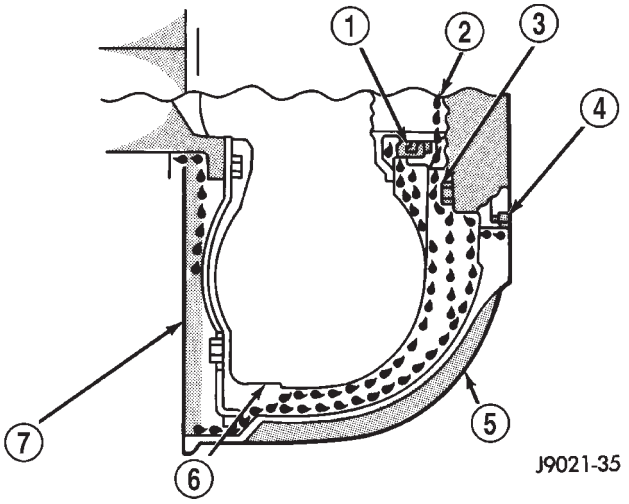

Fig. 29 Converter Housing Leak Paths

1 – PUMP SEAL
2 – PUMP VENT
3 – PUMP BOLT
4 – PUMP GASKET
5 – CONVERTER HOUSING
6 – CONVERTER
7 – REAR MAIN SEAL LEAK

Some suspected converter housing fluid leaks may not be leaks at all. They may only be the result of residual fluid in the converter housing, or excess fluid spilled during factory fill, or fill after repair. Converter housing leaks have several potential sources. Through careful observation, a leak source can be identified before removing the transmission for repair.

DIAGNOSIS AND TESTING (Continued)

Pump seal leaks tend to move along the drive hub and onto the rear of the converter (Fig. 29). Pump o-ring or pump body leaks follow the same path as a seal leak. Pump attaching bolt leaks are generally deposited on the inside of the converter housing and not on the converter itself. Pump seal or gasket leaks usually travel down the inside of the converter housing (Fig. 29).

TORQUE CONVERTER LEAKAGE

Possible sources of torque converter leakage are:

- Torque converter weld leaks at the outside diameter weld (Fig. 30).
- Torque converter hub weld (Fig. 30).

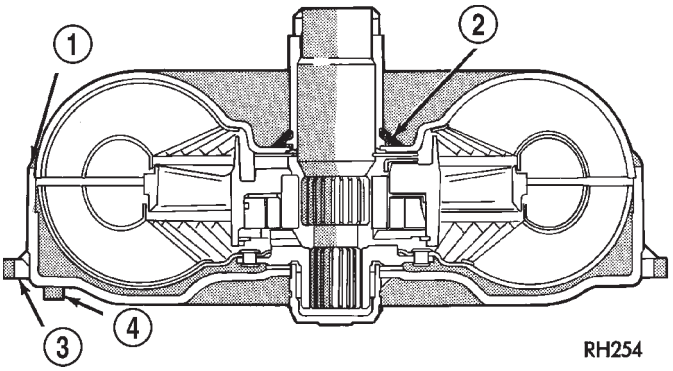

Fig. 30 Converter Leak Points—Typical

1 – OUTSIDE DIAMETER WELD
2 – TORQUE CONVERTER HUB WELD
3 – STARTER RING GEAR
4 – LUG

BRAKE/TRANSMISSION SHIFT INTERLOCK SYSTEM

The following chart describes the normal operation of the Brake Transmission Shift Interlock (BTSI) system. If the "expected response" differs from the vehicle's response, then system repair and/or adjustment is necessary.

Refer to the following chart that expected shifter response, depending on ignition key/switch (Fig. 31) and brake pedal positions.

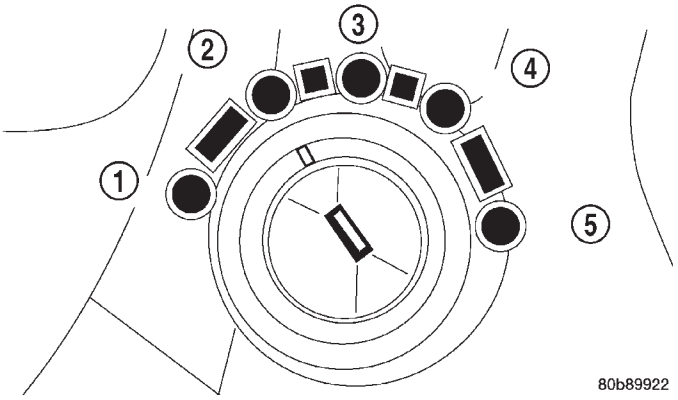

Fig. 31 Ignition Key/Switch Positions

1 – ACC
2 – LOCK
3 – OFF
4 – ON/RUN
5 – START

ACTION	EXPECTED RESPONSE
1. Turn key to the "OFF" position.	1. Shifter CAN be shifted out of park.
2. Turn key to the "ON/RUN" position.	2. Shifter CANNOT be shifted out of park.
3. Turn key to the "ON/RUN" position and depress the brake pedal.	3. Shifter CAN be shifted out of park.
4. Leave shifter in any gear and try to return key to the "LOCK" or "ACC" position.	4. Key cannot be returned to the "LOCK" or "ACC" position.
5. Return shifter to "PARK" and try to remove the key.	5. Key can be removed (after returning to "LOCK" position).
6. With the key removed, try to shift out of "PARK".	6. Shifter cannot be shifted out of "PARK".
NOTE: Any failure to meet these expected responses requires system adjustment or repair.	

SERVICE PROCEDURES

FLUID LEVEL AND CONDITION CHECK

NOTE: Only transmission fluid of the type labeled Mopar ATF+4 (Automatic Transmission Fluid–Type 9602) should be used in this transaxle.

FLUID LEVEL CHECK

The transmission sump has a fluid level indicator (dipstick) to check oil similar to most automatic transmissions. It is located on the left side of the engine. Be sure to wipe all dirt from dipstick handle before removing.

The torque converter fills in both the P Park and N Neutral positions. Place the selector lever in P Park to be sure that the fluid level check is accurate. **The engine should be running at idle speed for at least one minute, with the vehicle on level ground.** At normal operating temperature (approximately 82 C. or 180 F.), the fluid level is correct if it is in the HOT region (cross-hatched area) on the oil level indicator (Fig. 32). The fluid level should be within the WARM range of the dipstick at 70° F fluid temperature.

SERVICE PROCEDURES (Continued)

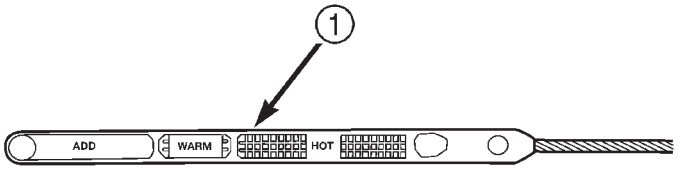

Fig. 32 Dipstick Markings

1 – TRANSAXLE DIPSTICK

80c4f542

FLUID LEVEL CHECK USING DRB

NOTE: Engine and Transaxle should be at normal operating temperature before performing this procedure.

(1) Start engine and apply parking brake.

(2) Hook up DRB scan tool and select transmission.

(3) Select sensors.

(4) Read the transmission temperature value.

(5) Compare the fluid temperature value with the fluid temperature chart (Fig. 33).

(6) Adjust transmission fluid level shown on the dipstick according to the chart.

(7) Check transmission for leaks.

Low fluid level can cause a variety of conditions because it allows the pump to take in air along with the fluid. As in any hydraulic system, air bubbles make the fluid spongy, therefore, pressures will be low and build up slowly.

Improper filling can also raise the fluid level too high. When the transaxle has too much fluid, the gears churn up foam and cause the same conditions which occur with a low fluid level.

In either case, air bubbles can cause overheating and/or fluid oxidation, and varnishing. This can interfere with normal valve, clutch, and accumulator operation. Foaming can also result in fluid escaping from the transaxle vent where it may be mistaken for a leak.

FLUID CONDITION

Along with fluid level, it is important to check the condition of the fluid. When the fluid smells burned, and is contaminated with metal or friction material particles, a complete transaxle recondition is needed. Be sure to examine the fluid on the dipstick closely. If there is any doubt about its condition, drain out a sample for a double check.

Mopar® ATF+4 (Automatic Transmission Fluid-Type 9602) when new is red in color. The ATF is dyed red so it can be identified from other fluids used in the vehicle such as engine oil or antifreeze. The red color is not permanent and is not an indicator of fluid condition. As the vehicle is driven, the ATF will begin to look darker in color and may eventually become brown. This is normal. A dark brown/black fluid accompanied with a burnt odor and/or deterioration in shift quality may indicate fluid deterioration or transmission component failure.

After the fluid has been checked, seat the dipstick fully to seal out water and dirt.

FLUID AND FILTER SERVICE—TRANSAXLE

NOTE: Refer to the maintenance schedules in LUBRICATION and MAINTENANCE, or the vehicle owner's manual, for the recommended maintenance (fluid/filter change) intervals for this transaxle.

NOTE: Only fluids of the type labeled Mopar® ATF+4 (Automatic Transmission Fluid) Type 9602 should be used. A filter change should be made at the time of the transmission oil change. The magnet (on the inside of the oil pan) should also be cleaned with a clean, dry cloth.

NOTE: If the transaxle is disassembled for any reason, the fluid and filter should be changed.

FLUID/FILTER SERVICE (RECOMMENDED)

(1) Raise vehicle on a hoist. Refer to LUBRICATION and MAINTENANCE for proper procedures. Place a drain container with a large opening, under transaxle oil pan.

(2) Loosen pan bolts and tap the pan at one corner to break it loose allowing fluid to drain, then remove the oil pan.

(3) Install a new filter and o-ring on bottom of the valve body (Fig. 34).

(4) Clean the oil pan and magnet. Reinstall pan using new Mopar Silicone Adhesive sealant. Tighten oil pan bolts to 19 N·m (165 in. lbs.).

(5) Pour four quarts of Mopar® ATF+4 (Automatic Transmission Fluid) Type 9602 through the dipstick opening.

(6) Start engine and allow to idle for at least one minute. Then, with parking and service brakes applied, move selector lever momentarily to each position, ending in the park or neutral position.

(7) Check the transaxle fluid level and add an appropriate amount to bring the transaxle fluid level to 3mm (1/8 in.) below the lowest mark on the dipstick (Fig. 35).

SERVICE PROCEDURES (Continued)

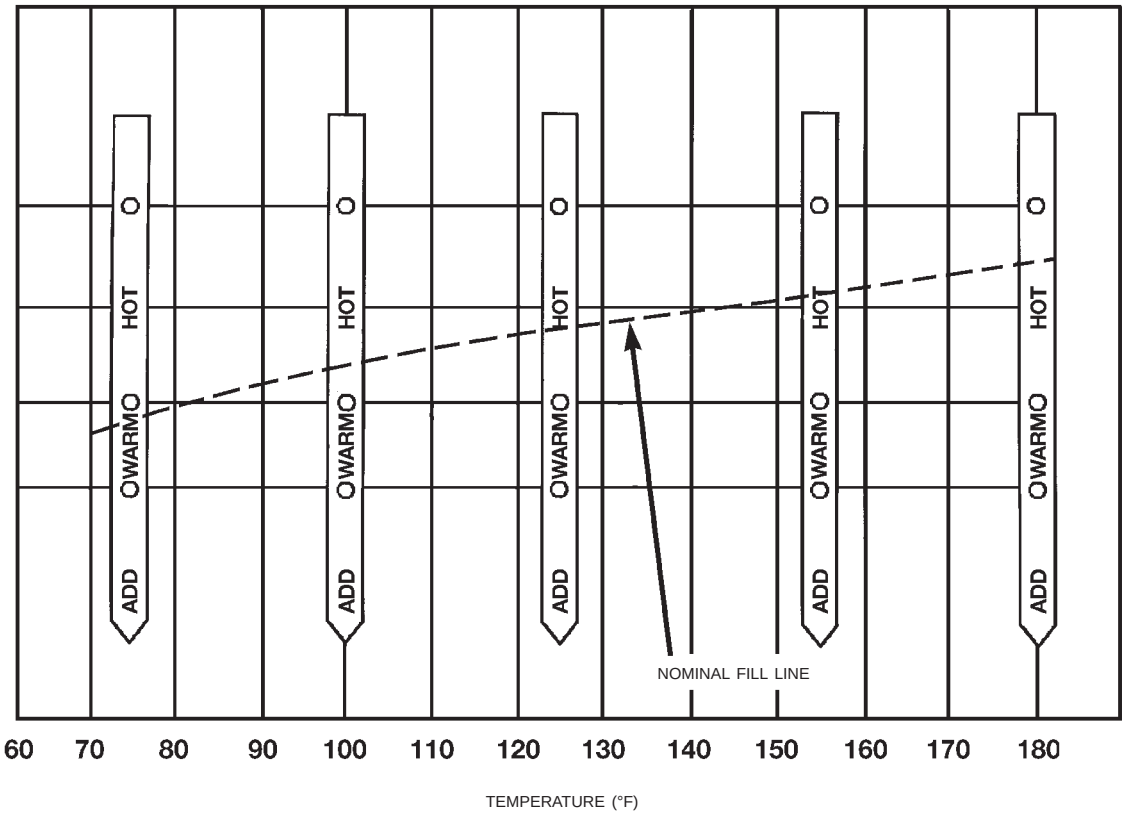

Fig. 33 Transmission Fluid Temperature Chart

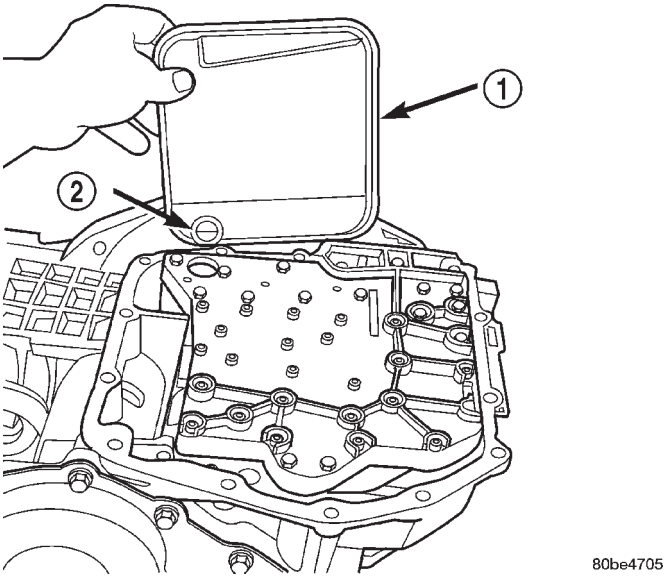

Fig. 34 Filter and O-Ring

1 – OIL FILTER
2 – O-RING

(8) Recheck the fluid level after the transaxle has reached normal operating temperature (180°F.). Refer to Fluid Level and Condition Check for the proper fluid fill procedure.

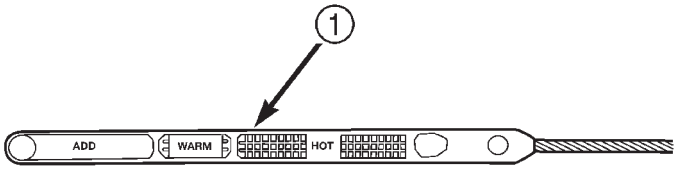

Fig. 35 Dipstick Markings

1 – TRANSAXLE DIPSTICK

80c4f542

(9) To prevent dirt from entering transaxle, make certain that dipstick is fully seated into the dipstick opening.

DIPSTICK TUBE FLUID SUCTION METHOD (ALTERNATIVE)

(1) When performing the fluid suction method, make sure the transaxle is at full operating temperature.

(2) To perform the dipstick tube fluid suction method, use a suitable fluid suction device (Vacula™ or equivalent).

SERVICE PROCEDURES (Continued)

(3) Insert the fluid suction line into the dipstick tube.

NOTE: Verify that the suction line is inserted to the lowest point of the transaxle oil pan. This will ensure complete evacuation of the fluid in the pan.

(4) Follow the manufacturers recommended procedure and evacuate the fluid from the transaxle.

(5) Remove the suction line from the dipstick tube.

(6) Pour four quarts of Mopar® ATF+4 (Automatic Transmission Fluid) Type 9602 through the dipstick opening.

(7) Start engine and allow to idle for at least one minute. Then, with parking and service brakes applied, move selector lever momentarily to each position, ending in the park or neutral position.

(8) Check the transaxle fluid level and add an appropriate amount to bring the transaxle fluid level to 3mm (1/8 in.) below the lowest mark on the dipstick (Fig. 35).

(9) Recheck the fluid level after the transaxle has reached normal operating temperature (180°F.). Refer to Fluid Level and Condition Check for the proper fluid fill procedure.

(10) To prevent dirt from entering transaxle, make certain that dipstick is fully seated into the dipstick opening.

ALUMINUM THREAD REPAIR

Damaged or worn threads in the aluminum transaxle case and valve body can be repaired by the use of Heli-Coils, or equivalent. This repair consists of drilling out the worn-out damaged threads. Then tap the hole with a special Heli-Coil tap, or equivalent, and installing a Heli-Coil insert, or equivalent, into the hole. This brings the hole back to its original thread size.

Heli-Coil, or equivalent, tools and inserts are readily available from most automotive parts suppliers.

FLUSHING COOLERS AND TUBES

When a transaxle failure has contaminated the fluid, the oil cooler(s) must be flushed. The cooler bypass valve in the transaxle must be replaced also. The torque converter must also be replaced with an exchange unit. This will insure that metal particles or sludged oil are not later transferred back into the reconditioned (or replaced) transaxle.

The recommended procedure for cooler flushing is to use Tool 6906 Cooler Flusher.

WARNING: WEAR PROTECTIVE EYEWEAR THAT MEETS THE REQUIREMENTS OF OSHA AND ANSI Z87.1–1968. WEAR STANDARD INDUSTRIAL RUBBER GLOVES.

KEEP LIGHTED CIGARETTES, SPARKS, FLAMES, AND OTHER IGNITION SOURCES AWAY FROM THE AREA TO PREVENT THE IGNITION OF COMBUSTIBLE LIQUIDS AND GASES. KEEP A CLASS (B) FIRE EXTINGUISHER IN THE AREA WHERE THE FLUSHER WILL BE USED.

KEEP THE AREA WELL VENTILATED.

DO NOT LET FLUSHING SOLVENT COME IN CONTACT WITH YOUR EYES OR SKIN: IF EYE CONTAMINATION OCCURS, FLUSH EYES WITH WATER FOR 15 TO 20 SECONDS. REMOVE CONTAMINATED CLOTHING AND WASH AFFECTED SKIN WITH SOAP AND WATER. SEEK MEDICAL ATTENTION.

(1) Remove cover plate filler plug on Tool 6906. Fill reservoir 1/2 to 3/4 full of fresh flushing solution. Flushing solvents are petroleum based solutions generally used to clean automatic transmission components. **DO NOT** use solvents containing acids, water, gasoline, or any other corrosive liquids.

(2) Reinstall filler plug on Tool 6906.

(3) Verify pump power switch is turned OFF. Connect red alligator clip to positive (+) battery post. Connect black (-) alligator clip to a good ground.

NOTE: When flushing transmission cooler and lines, ALWAYS reverse flush.

(4) Connect the BLUE pressure line to the OUTLET (From) cooler line.

(5) Connect the CLEAR return line to the INLET (To) cooler line

(6) Turn pump ON for two to three minutes to flush cooler and lines.

(7) Turn pump OFF.

(8) Disconnect CLEAR suction line from reservoir at cover plate. Disconnect CLEAR return line at cover plate, and place it in a drain pan.

(9) Turn pump ON for 30 seconds to purge flushing solution from cooler and lines. Turn pump OFF.

(10) Place CLEAR suction line into a one quart container of Mopar® ATF+4 (Automatic Transmission Fluid—Type 9602).

(11) Turn pump ON until all transmission fluid is removed from the one quart container and lines. This purges any residual cleaning solvent from the transmission cooler and lines. Turn pump OFF.

(12) Disconnect alligator clips from battery. Reconnect flusher lines to cover plate, and remove flushing adapters from cooler lines.

SERVICE PROCEDURES (Continued)

OIL PUMP VOLUME CHECK

Measuring oil pump output volume will determine if sufficient flow to the transmission oil cooler exists, and whether or not an internal transmission failure is present.

Verify that transmission fluid is at the proper level. Refer to Fluid Level and Condition in this Group. If adding fluid is necessary, fill to the proper level with Mopar® ATF+4 (Automatic Transmission Fluid–Type 9602). The following procedure is to check oil pump output volume:

(1) Disconnect the **To cooler** line at the oil cooler inlet and place a collecting container under the disconnected line.

CAUTION: With the fluid set at the proper level, fluid collection should not exceed (1) quart or internal damage to the transmission may occur.

(2) Start engine and run **at curb idle speed**, with the shift selector in neutral.

(3) If one quart of ATF is collected in 20 seconds or less, flow is within acceptable limits. If fluid flow is intermittent or it takes more than 20 seconds to collect one quart of ATF, refer to Hydraulic Pressure Tests in this Group.

(4) Inspect the cooler hose for damage. Replace if necessary.

(5) Connect the **To cooler** hose to the oil cooler inlet and torque clamp to 2 N·m (20 in. lbs.) torque.

(6) Refill the transaxle to proper level with Mopar® ATF+4 (Automatic Transmission Fluid–Type 9602).

TRANSAXLE QUICK LEARN PROCEDURE

The quick learn procedure requires the use of the DRB scan tool. This program allows the electronic transaxle system to recalibrate itself. This will provide the best possible transaxle operation.

NOTE: The quick learn procedure should be performed if any of the following procedures are performed:

- Transaxle Assembly Replacement
- Transmission Control Module Replacement
- Solenoid/Pressure Switch Assembly Replacement
- Clutch Plate and/or Seal Replacement
- Valve Body Replacement or Recondition

To perform the Quick Learn Procedure, the following conditions must be met:

- The brakes must be applied
- The engine speed must be above 500 rpm
- The throttle angle (TPS) must be less than 3 degrees
- The shift lever position must stay until prompted to shift to overdrive
- The shift lever position must stay in overdrive after the Shift to Overdrive prompt until the DRB indicates the procedure is complete
- The calculated oil temperature must be above 60° and below 200°

Procedure

(1) Plug the DRB scan tool into the data link connector. The connector is located under the instrument panel.

(2) Go to the Transmission screen.

(3) Go to the Miscellaneous screen.

(4) Select Quick Learn Procedure. Follow the instructions of the DRB to perform the Quick Learn Procedure.

PINION FACTOR PROCEDURE

NOTE: This procedure must be performed if the Transmission Control Module (TCM) has been replaced with a NEW or replacement unit. Failure to perform this procedure will result in an inoperative or improperly calibrated speedometer.

The vehicle speed readings for the speedometer are taken from the output speed sensor. The TCM must be calibrated to the different combinations of equipment available. Pinion Factor allows the technician to set the Transmission Control Module initial setting so that the speedometer readings will be correct. To properly read and/or reset the Pinion Factor, it is necessary to use a DRB scan tool.

Procedure

(1) Plug the DRB scan tool into the data link connector (DLC) located under the instrument panel.

(2) Select the Transmission menu.

(3) Select the Miscellaneous menu.

(4) Select Pinion Factor. Then follow the instructions on the DRB scan tool screen.

REMOVAL AND INSTALLATION

GEARSHIFT CABLE

REMOVAL

(1) Loosen set screw and remove knob from shifter handle (Fig. 36).

(2) Remove the center console assembly as shown in (Fig. 37).

(3) Remove shifter bezel (Fig. 38).

(4) Disconnect shift cable from shifter mechanism as shown in (Fig. 39).

(5) Remove three grommet plate to floor pan nuts as shown in (Fig. 39).

REMOVAL AND INSTALLATION (Continued)

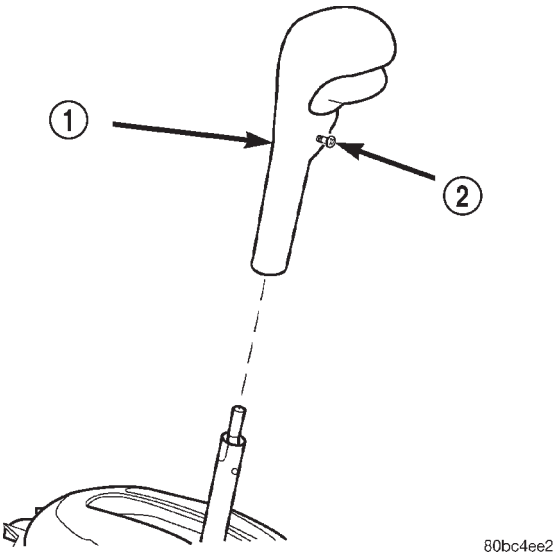

Fig. 36 Gearshift Knob Removal/Installation

1 – SHIFTER KNOB
2 – SET SCREW

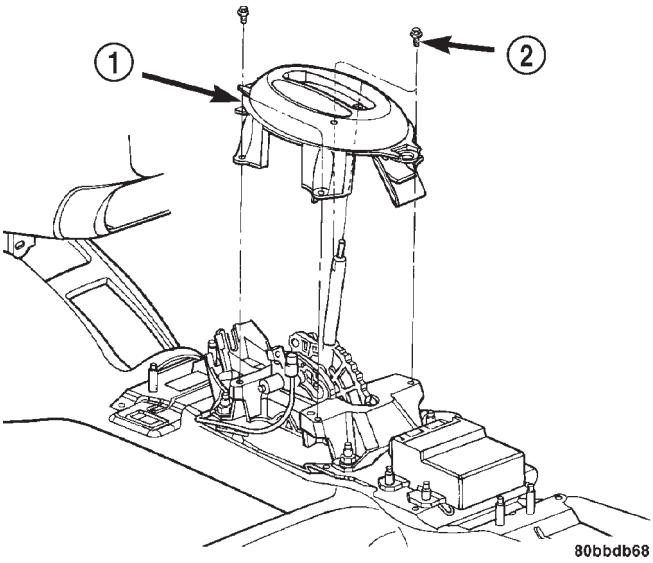

Fig. 38 Shifter Bezel Removal/Installation

1 – BEZEL
2 – SCREW (4)

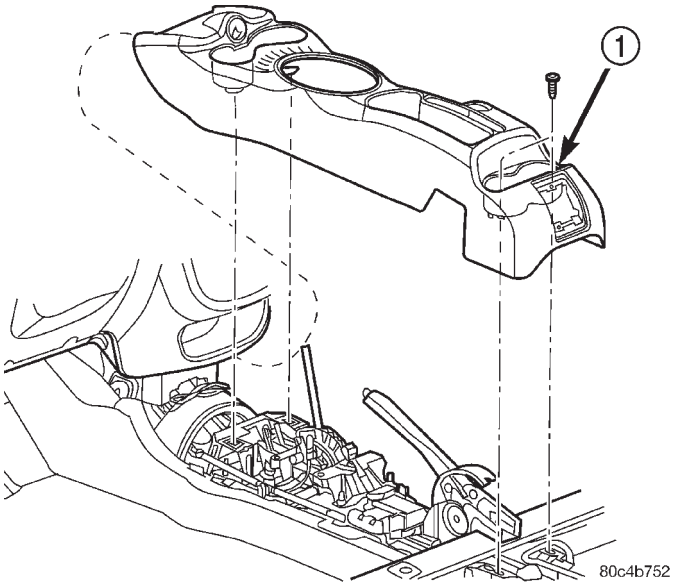

Fig. 37 Center Console Removal/Installation

1 – CENTER CONSOLE

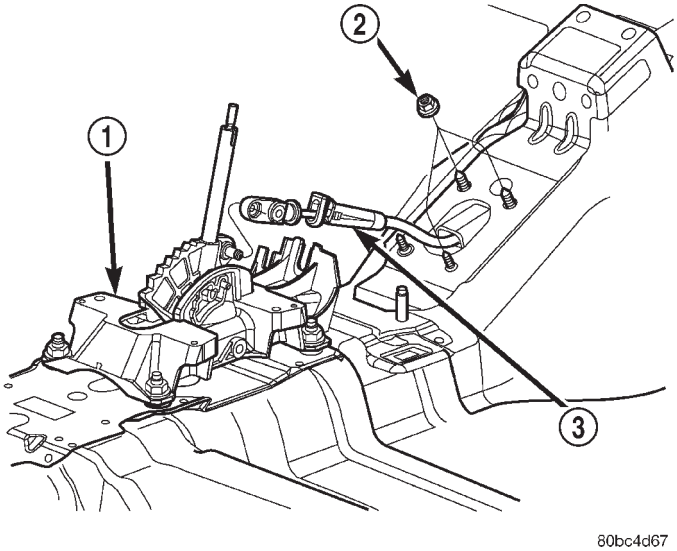

Fig. 39 Gearshift Cable at Shifter Assembly

1 – SHIFTER ASSEMBLY
2 – GROMMET PLATE NUT
3 – SHIFT CABLE

REMOVAL AND INSTALLATION (Continued)

(6) Remove air cleaner assembly (Fig. 40).

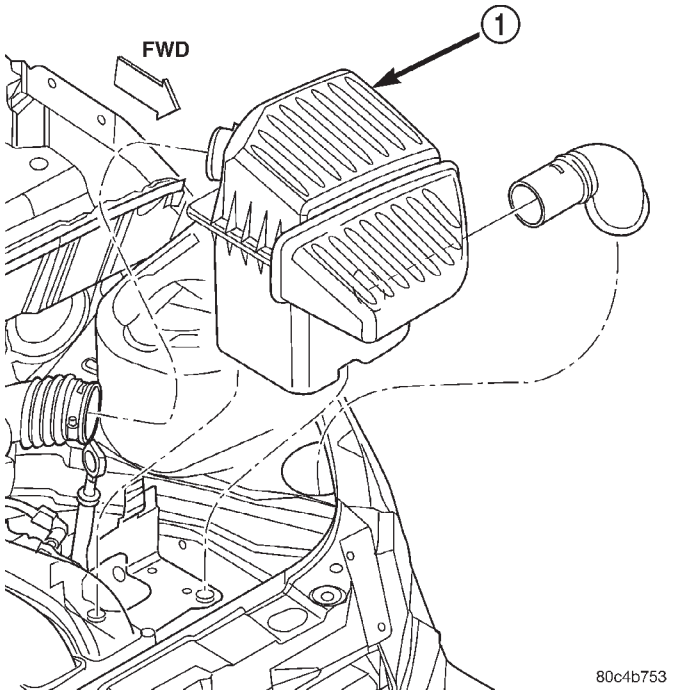

Fig. 40 Air Cleaner Assembly Removal/Installation

1 – AIR CLEANER ASSEMBLY

(7) Disconnect both battery cables, remove battery hold down clamp and bolt, and remove battery (Fig. 41).

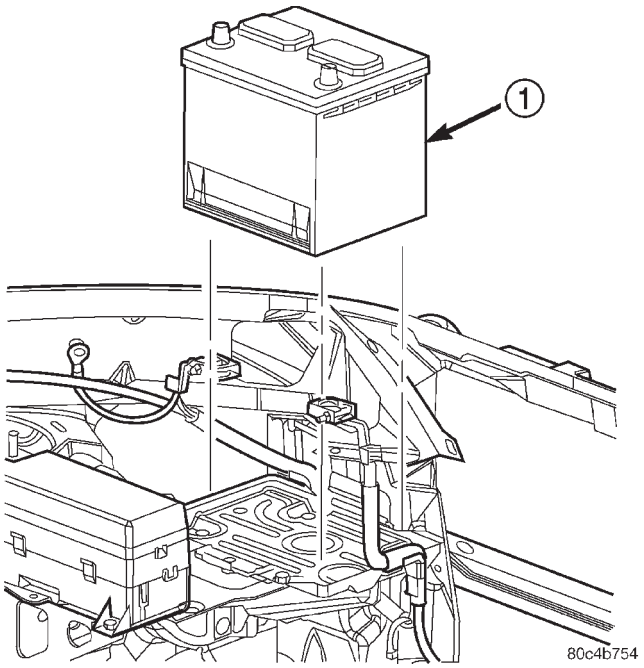

Fig. 41 Battery Removal/Installation

1 – BATTERY

(8) Remove battery tray (Fig. 42) from bracket.

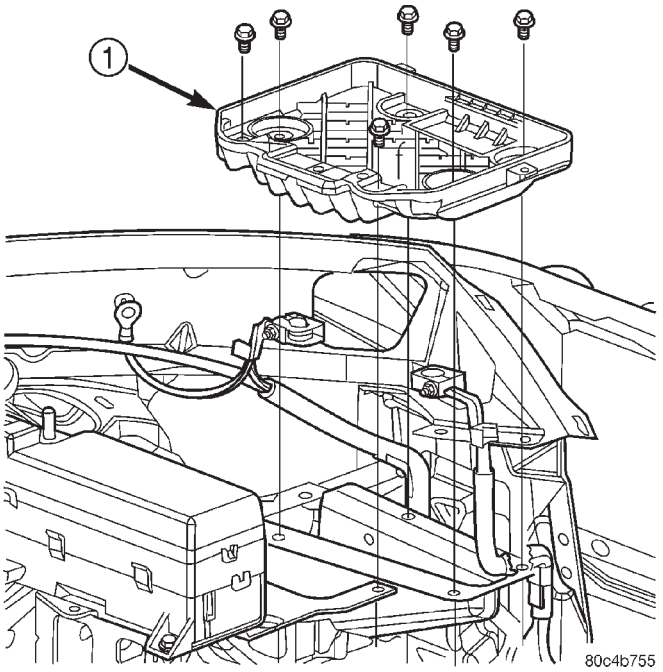

Fig. 42 Battery Tray Removal/Installation

1 – BATTERY TRAY

(9) Disconnect shifter cable from shift lever and remove from bracket (Fig. 43).

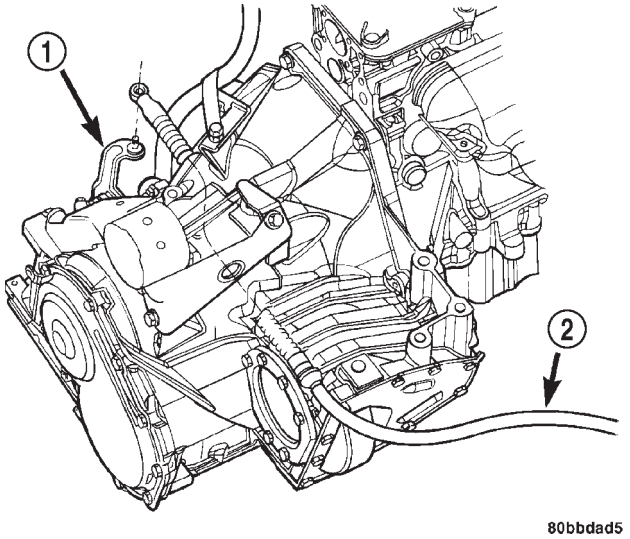

Fig. 43 Gear Shift Cable at Transaxle

1 – SHIFT LEVER
2 – SHIFT CABLE

(10) Raise vehicle on hoist.

(11) Remove catalytic converter heat shield (Fig. 44).

(12) Remove remaining grommet plate screw and remove cable assembly from vehicle (Fig. 45).

REMOVAL AND INSTALLATION (Continued)

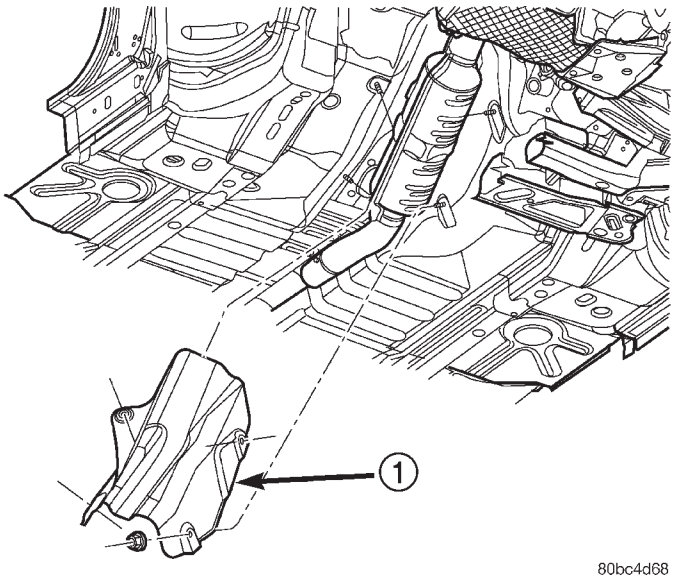

Fig. 44 Catalytic Converter Heat Shield

1 – CONVERTER HEAT SHIELD

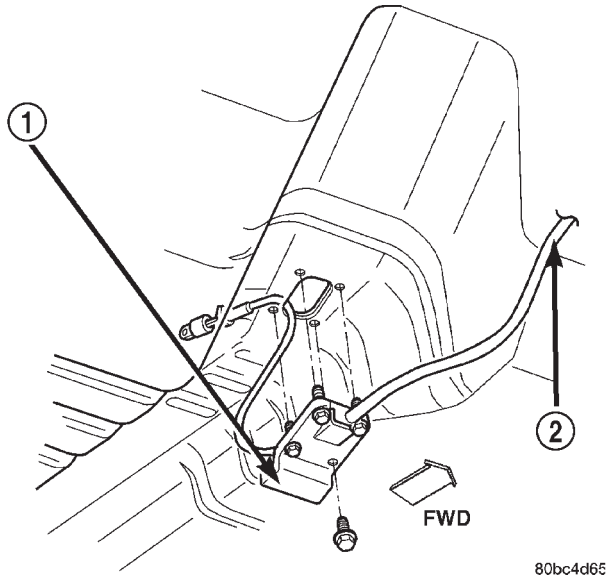

Fig. 45 Grommet Plate/Shift Cable at Floor Pan

1 – GROMMET PLATE
2 – SHIFT CABLE

INSTALLATION

(1) Install cable assembly through floor pan opening and secure to floor pan with grommet plate and one screw (Fig. 45). Make sure the three grommet plate studs protrude through cable assembly and floor pan and tighten screw to 7 N·m (60 in. lbs.).

(2) Route transaxle end of cable assembly into engine compartment and over transaxle assembly.

(3) Install catalytic converter heat shield (Fig. 44).

(4) Install gear shift cable to bracket and connect to shift lever (Fig. 43).

(5) Lower vehicle.

(6) Install and tighten the three grommet plate-to-floor pan nuts. Tighten to 6 N·m (50 in. lbs.) torque.

(7) Connect gearshift cable to shifter assembly as shown in (Fig. 39).

(8) Install shifter bezel (Fig. 38).

(9) **Adjust gearshift cable as follows:**

(a) Place gearshift lever in the PARK (P) position.

(b) Loosen shift cable adjustment screw (Fig. 46).

(c) Verify transaxle is in the PARK (P) position and the shifter lever is in gated PARK.

(d) Tighten shift cable adjustment screw to 8 N·m (70 in. lbs.) torque.

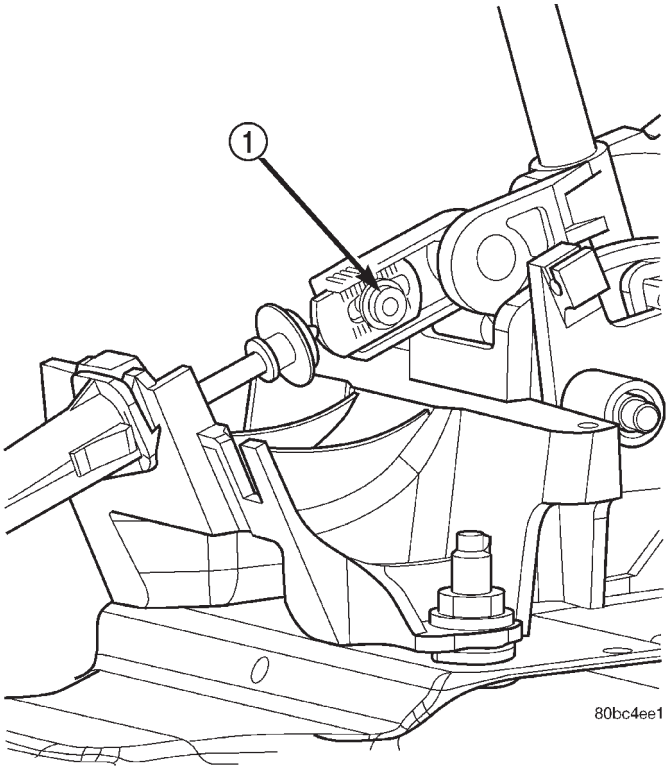

Fig. 46 Gearshift Cable Adjustment Screw

1 – GEARSHIFT CABLE ADJUSTMENT SCREW

(10) Install battery tray (Fig. 42).

(11) Install battery and hold down clamp (Fig. 41).

(12) Install the air cleaner assembly (Fig. 40).

(13) Install center console assembly (Fig. 37).

(14) Install gearshift knob and tighten set screw to 2 N·m (17 in. lbs.) torque (Fig. 36).

(15) Connect battery cables.

(16) Verify that engine starter operates in both PARK (P) and NEUTRAL (N). Starter should not operate in any other gear position.

REMOVAL AND INSTALLATION (Continued)

GEARSHIFT MECHANISM

REMOVAL

(1) Disconnect battery negative cable and isolate.

(2) Loosen set screw and remove knob from shifter handle (Fig. 47).

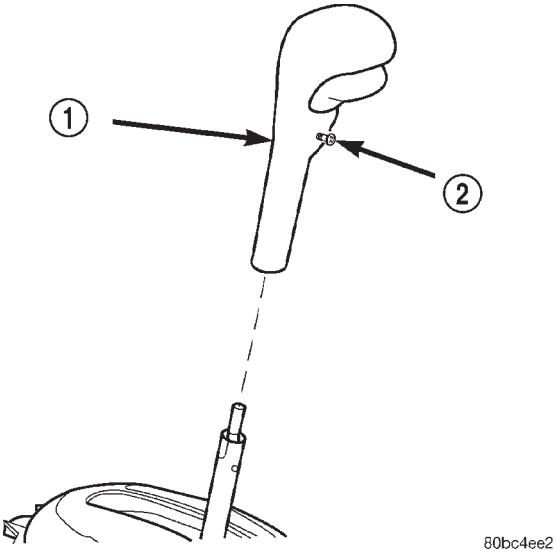

Fig. 47 Gearshift Knob Removal/Installation

1 – SHIFTER KNOB
2 – SET SCREW

(3) Remove the center console assembly as shown in (Fig. 48).

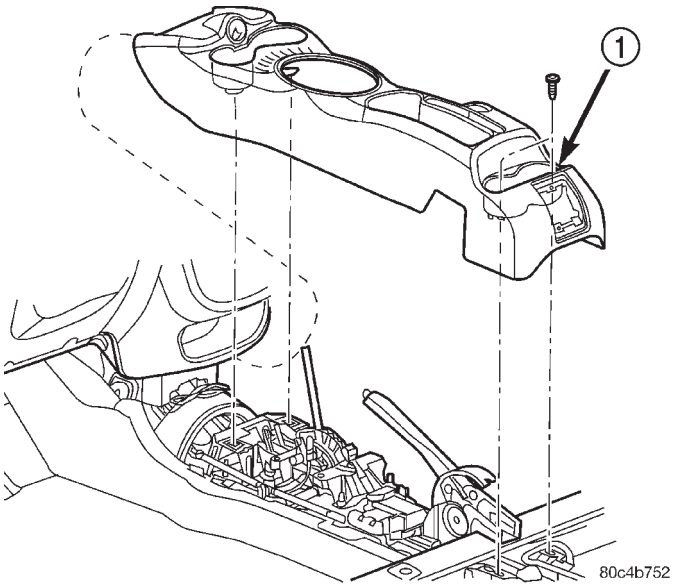

Fig. 48 Center Console Removal/Installation

1 – CENTER CONSOLE

(4) Remove shifter bezel (Fig. 49).

(5) Disconnect shift cable from shifter assembly as shown in (Fig. 50).

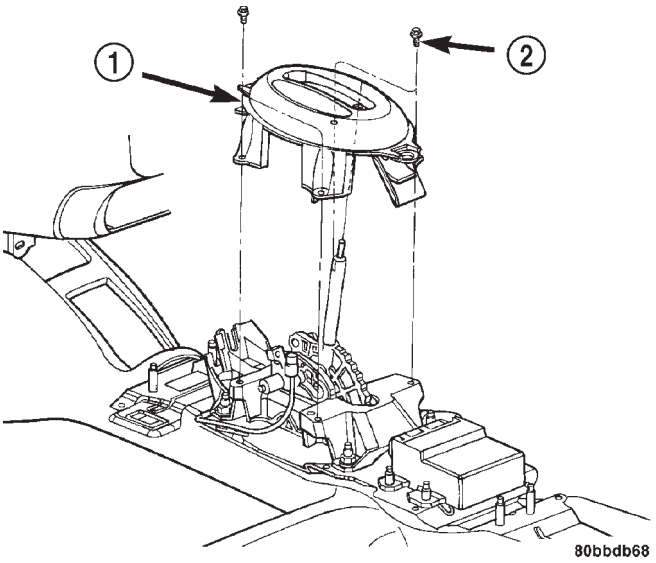

Fig. 49 Shifter Bezel Removal/Installation

1 – BEZEL
2 – SCREW (4)

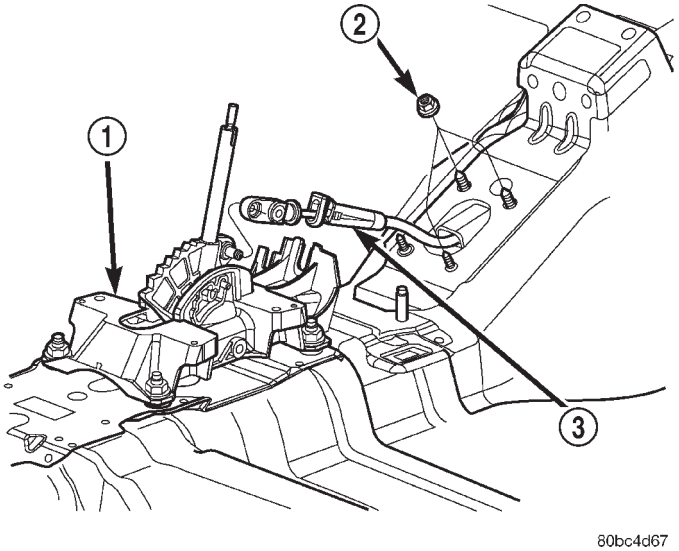

Fig. 50 Gearshift Cable at Shifter Assembly

1 – SHIFTER ASSEMBLY
2 – GROMMET PLATE NUT
3 – SHIFT CABLE

(6) Disconnect the brake/transmission shift interlock cable from the shifter lever and bracket as shown in (Fig. 51).

(7) Remove the four shifter assembly-to-floor pan nuts and remove shifter assembly from vehicle (Fig. 52).

INSTALLATION

(1) Install gearshift mechanism and tighten the four nuts to 12 N·m (105 in. lbs.) torque.

(2) Install gearshift cable as shown in (Fig. 50).

REMOVAL AND INSTALLATION (Continued)

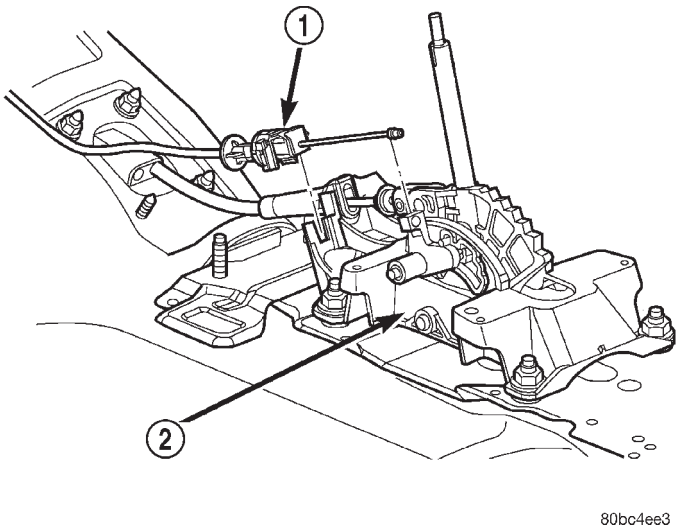

Fig. 51 Brake/Transmission Shift Interlock Cable

1 – INTERLOCK CABLE
2 – SHIFTER ASSEMBLY

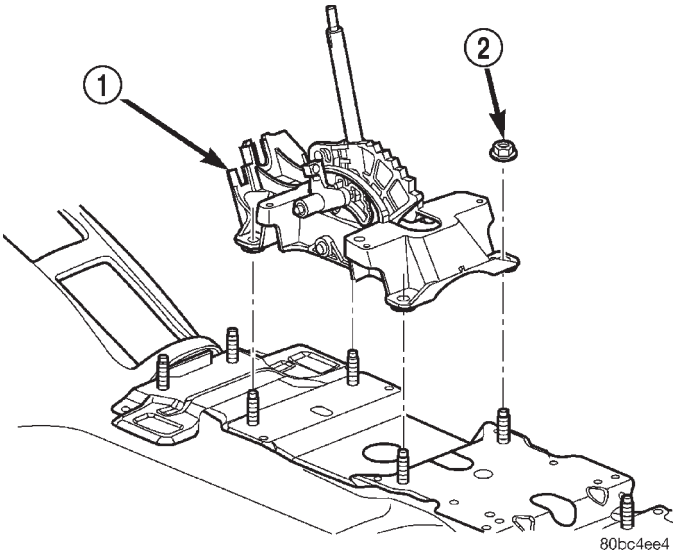

Fig. 52 Gearshift Mechanism Removal/Installation

1 – SHIFTER ASSEMBLY
2 – NUT (4)

(3) Install brake/transmission shift interlock cable as shown in (Fig. 51).

(4) Verify proper gearshift cable and brake/transmission shift interlock cable adjustments. Refer to ADJUSTMENTS.

(5) Install shifter bezel (Fig. 49).

(6) Install center console assembly (Fig. 48).

(7) Install gearshift knob and tighten set screw to 2 N·m (17 in. lbs.) torque (Fig. 47).

(8) Connect battery negative cable.

BRAKE/TRANSMISSION SHIFT INTERLOCK CABLE

REMOVAL

(1) Disconnect the battery negative cable.

(2) Loosen set screw and remove knob from shifter handle (Fig. 53).

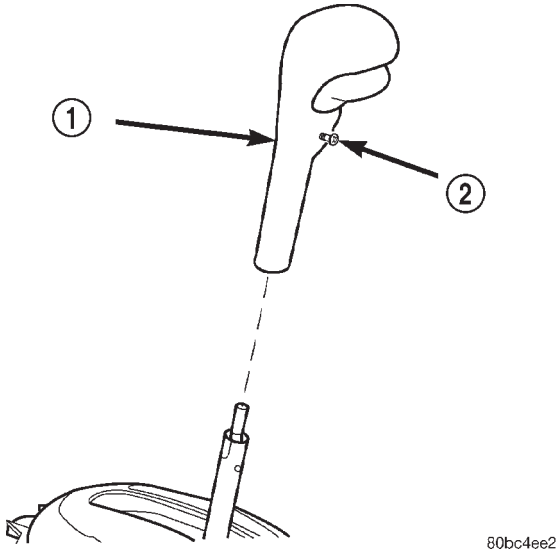

Fig. 53 Gearshift Knob Removal/Installation

1 – SHIFTER KNOB
2 – SET SCREW

(3) Remove the center console assembly as shown in (Fig. 54).

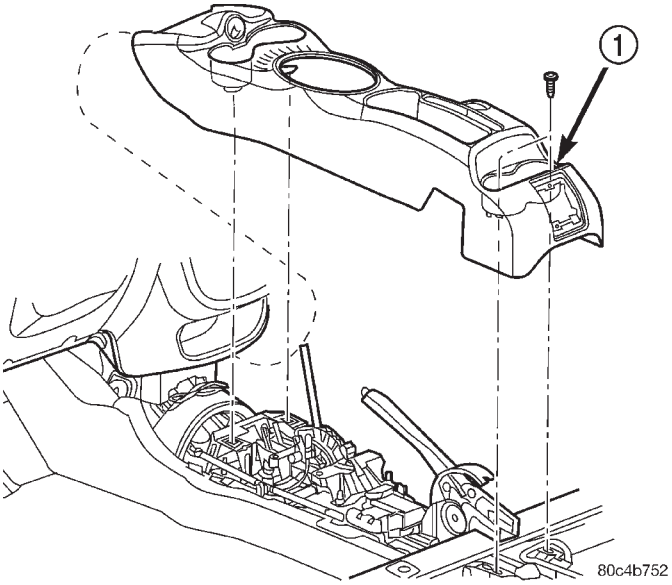

Fig. 54 Center Console Removal/Installation

1 – CENTER CONSOLE

REMOVAL AND INSTALLATION (Continued)

(4) Remove shifter bezel (Fig. 55).

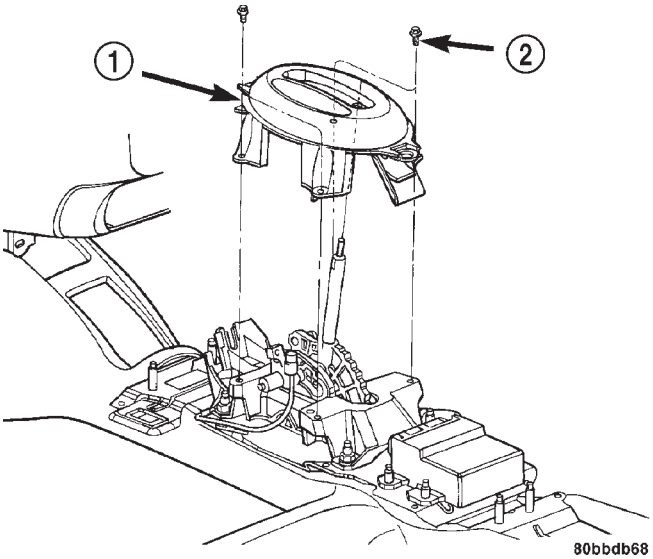

Fig. 55 Shifter Bezel Removal/Installation

1 – BEZEL
2 – SCREW (4)

(5) Disconnect the shifter/ignition interlock cable from the shifter lever and bracket as shown in (Fig. 56). Remove the cable core end from the plastic cam of the shifter mechanism and release cable from shifter bracket

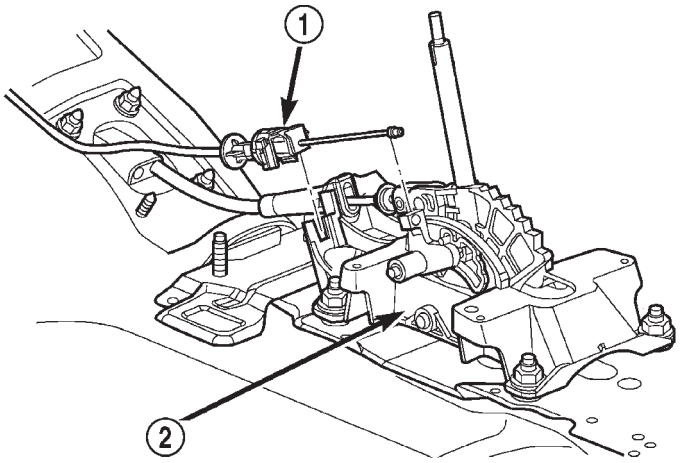

Fig. 56 Interlock Cable at Shifter Assembly

1 – INTERLOCK CABLE
2 – SHIFTER ASSEMBLY

(6) Remove the steering column lower cover (Fig. 57).

(7) Remove the steering column upper and lower shrouds (Fig. 58).

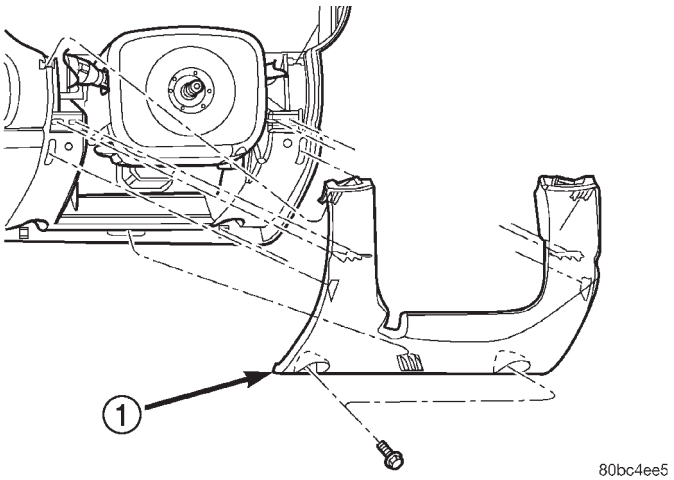

Fig. 57 Steering Column Lower Cover

1 – LOWER COVER

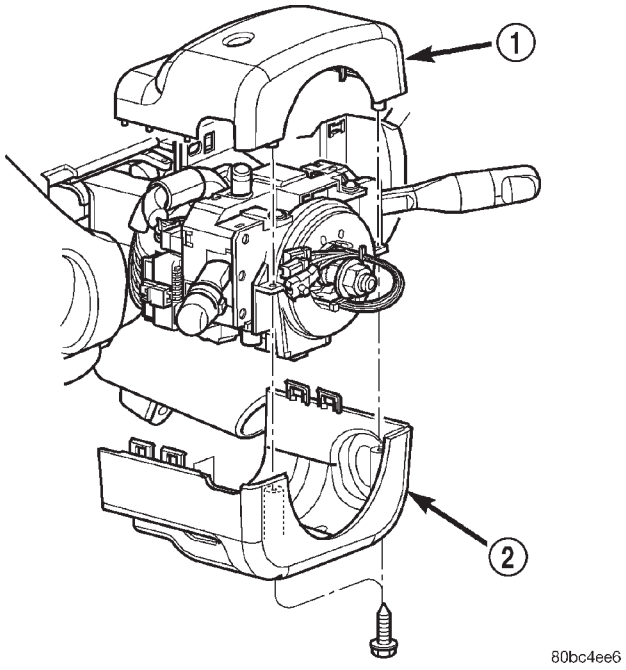

Fig. 58 Steering Column Shrouds

1 – UPPER SHROUD
2 – LOWER SHROUD

(8) Disconnect the Brake/Transmission Shift Interlock (BTSI) solenoid connector from the interlock cable (Fig. 59).

(9) Rotate the ignition key to the “OFF” or “ON/RUN” position (Fig. 60).

(10) Squeeze the interlock cable locking tab. Remove the cable from the interlock housing (Fig. 61).

(11) Release cable from retaining clips and remove through opening under steering column.

REMOVAL AND INSTALLATION (Continued)

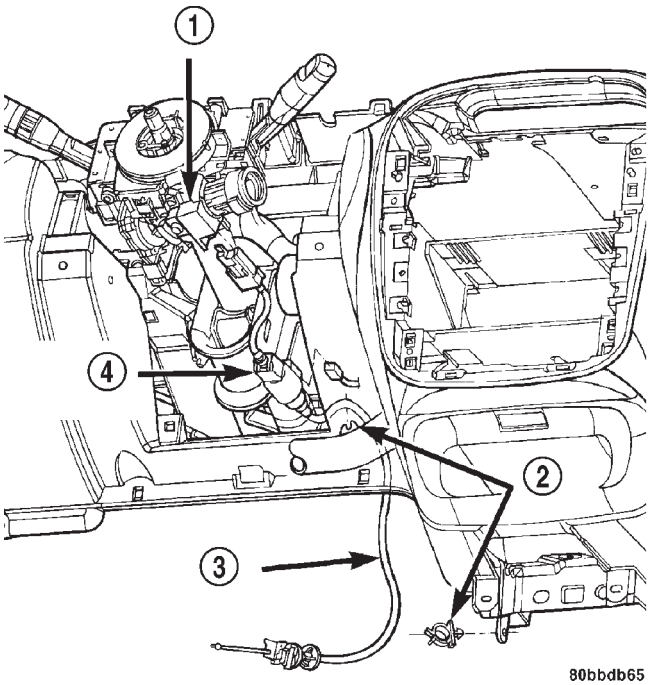

Fig. 59 Interlock Cable at Steering Column-Typical

1 – IGNITION SWITCH
2 – CLIP
3 – INTERLOCK CABLE
4 – BTSI SOLENOID

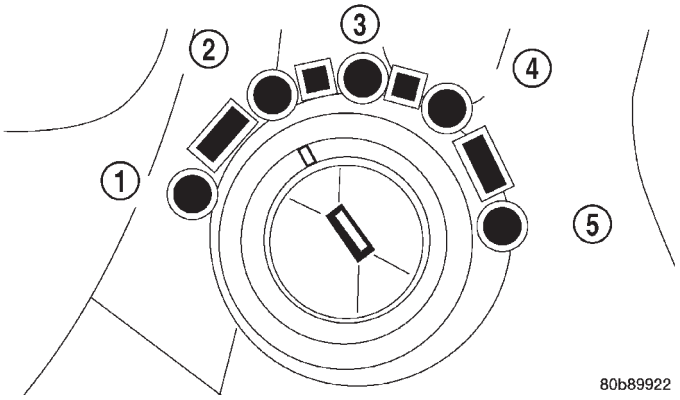

Fig. 60 Ignition Key/Switch Positions

1 – ACC
2 – LOCK
3 – OFF
4 – ON/RUN
5 – START

INSTALLATION

CAUTION: When installing interlock cable assembly, care must be taken not to bend exposed cable wire and slug at shifter end of cable.

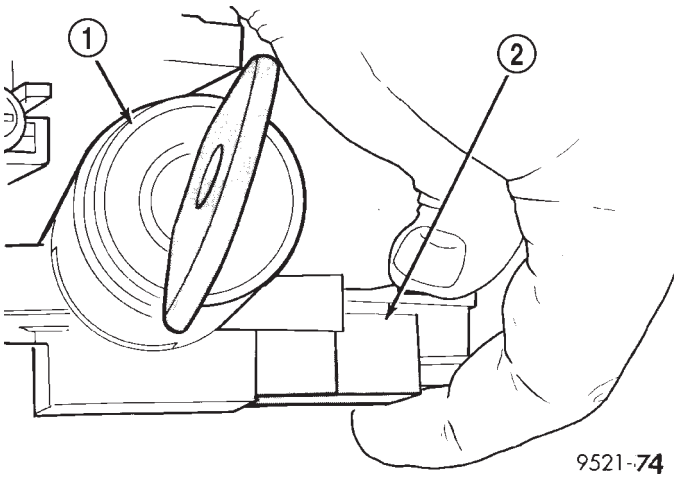

Fig. 61 Interlock Cable and Connector

1 – IGNITION LOCK CYLINDER
2 – INTERLOCK CABLE

(1) Route interlock cable through hole in instrument panel below steering column and around to gear shifter assembly.

(2) Turn the ignition key to the “OFF” or “ON/RUN” position (Fig. 60).

(3) Install the interlock cable into the interlock housing at the steering column (Fig. 62). Verify the cable snaps into the housing and is fully seated.

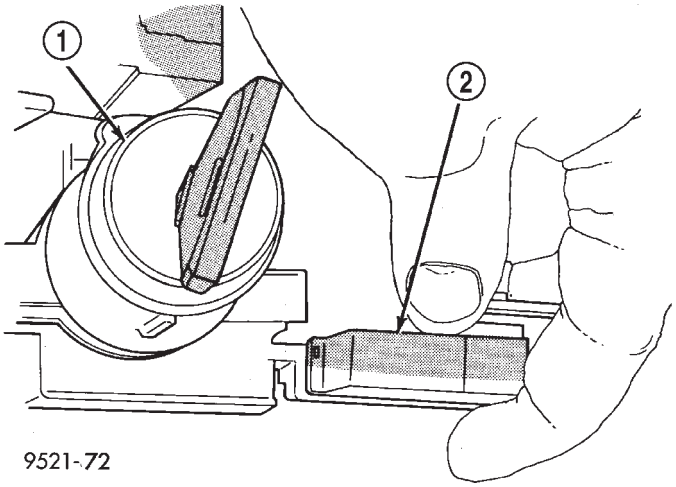

Fig. 62 Interlock Cable at Interlock Housing

1 – IGNITION SWITCH
2 – INTERLOCK CABLE

(4) Return the ignition key to the “LOCK” position (Fig. 60).

(5) Connect the BTSI solenoid connector (Fig. 59).

(6) Install steering column upper and lower shrouds (Fig. 58).

(7) Install steering column lower cover (Fig. 57).

(8) Verify that shifter is in gated “PARK”.

REMOVAL AND INSTALLATION (Continued)

(9) Install the cable core end to the plastic cam of the shifter mechanism. Snap the shifter/ignition interlock cable end fitting into the groove in the gearshift mechanism as shown in (Fig. 56).

(10) **Adjust interlock cable/system as follows:** If interlock cable is being replaced, it will come with an adjustment pin. Remove the pin from the cable and allow the cable to “self-adjust”. Lock cable adjustment by pressing down on the adjuster lock until bottomed at the cable housing. If interlock cable is being re-used, no pin will be provided. Pry up on cable adjuster lock to release and allow cable to “self-adjust”. Lock cable adjustment by pressing down on the adjuster lock until bottomed at the cable housing.

(11) **Connect battery negative cable and verify interlock system operation as follows:**

ACTION	EXPECTED RESPONSE
1. Turn key to the “OFF” position.	1. Shifter CAN be shifted out of park.
2. Turn key to the ″ON/RUN” position.	2. Shifter CANNOT be shifted out of park.
3. Turn key to the “ON/RUN” position and depress the brake pedal.	3. Shifter CAN be shifted out of park.
4. Leave shifter in any gear and try to return key to the “LOCK” or ″ACC” position.	4. Key cannot be returned to the “LOCK” or “ACC” position.
5. Return shifter to “PARK” and try to remove the key.	5. Key can be removed (after returning to “LOCK” position).
6. With the key removed, try to shift out of “PARK”.	6. Shifter cannot be shifted out of “PARK”.
NOTE: Any failure to meet these expected responses requires system adjustment or repair.	

(12) Install shifter bezel (Fig. 55).

(13) Install center console assembly (Fig. 54).

(14) Install gearshift knob and tighten set screw to 2 N·m (17 in. lbs.) torque (Fig. 53).

(15) Connect battery negative cable.

INTERLOCK MECHANISM

REMOVAL

(1) Remove the steering column lower cover (Fig. 63).

(2) Remove the steering column upper and lower shrouds (Fig. 64).

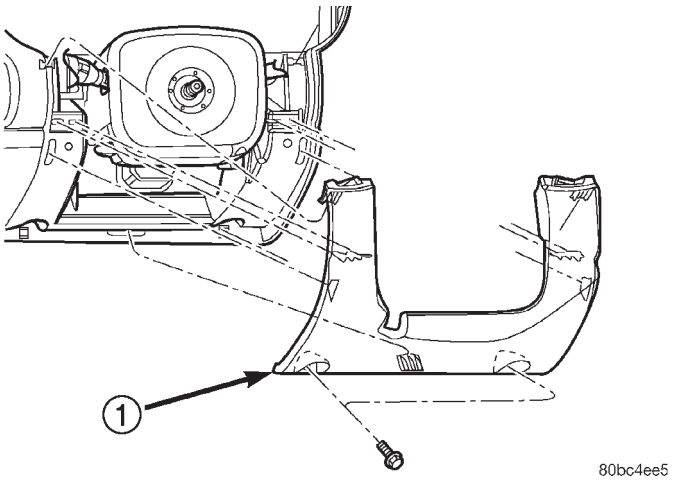

Fig. 63 Steering Column Lower Cover

1 – LOWER COVER

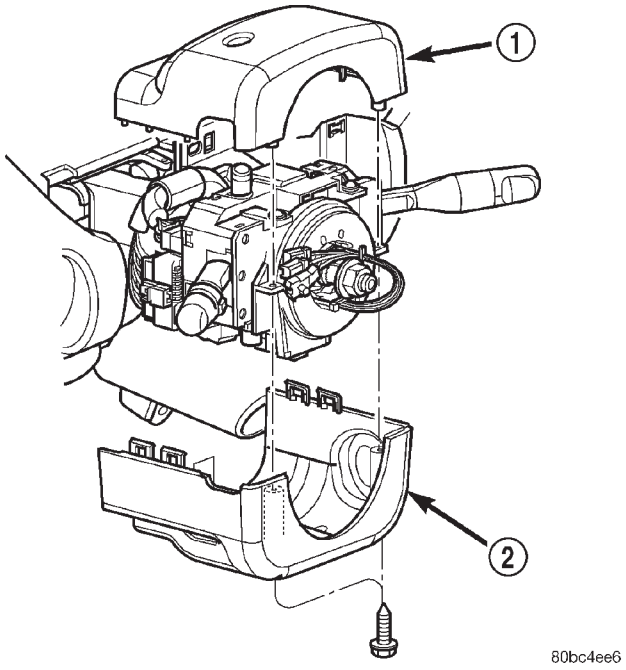

Fig. 64 Steering Column Shrouds

1 – UPPER SHROUD
2 – LOWER SHROUD

(3) Turn the ignition key to the “OFF” or “ON/RUN” position (Fig. 65).

(4) Grasp the interlock cable and connector firmly. Remove the interlock cable (Fig. 66).

(5) Remove the two interlock mechanism-to-steering column attaching screws (Fig. 67). Remove the interlock housing.

REMOVAL AND INSTALLATION (Continued)

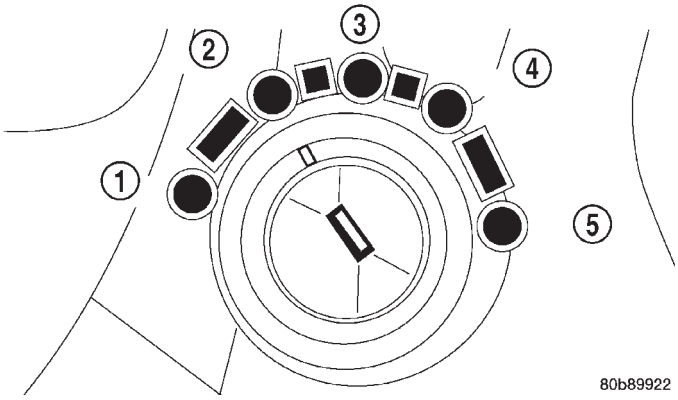

Fig. 65 Ignition Key/Switch Positions

1 – ACC
2 – LOCK
3 – OFF
4 – ON/RUN
5 – START

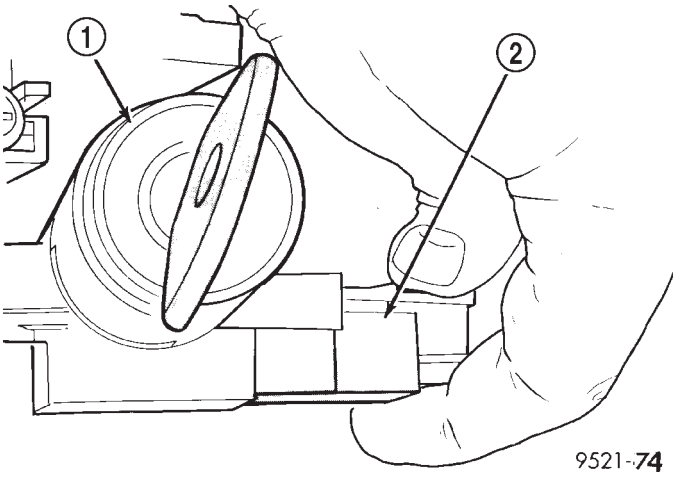

Fig. 66 Interlock Cable

1 – IGNITION LOCK CYLINDER
2 – INTERLOCK CABLE

INSTALLATION

(1) Position the interlock housing at steering column. Install the two interlock mechanism-to-steering column attaching screws. Torque screws to 3 N·m (21 in. lbs.).

(2) Snap the interlock cable into the housing.

(3) Install steering column upper and lower shrouds (Fig. 64).

(4) Install steering column lower cover (Fig. 63).

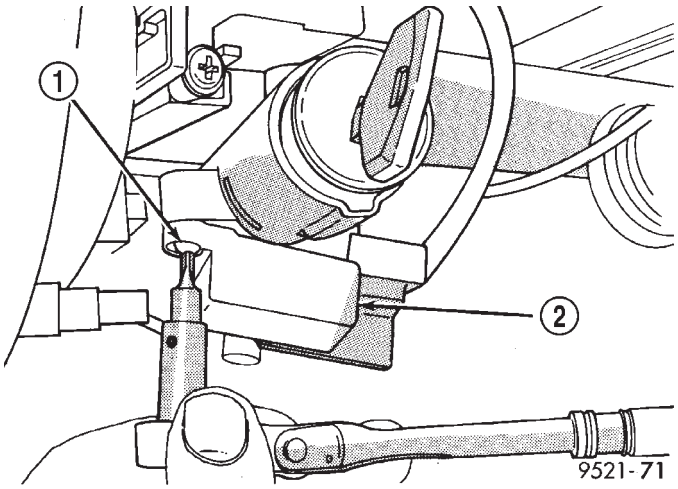

Fig. 67 Interlock Mechanism

1 – MOUNTING SCREW
2 – INTERLOCK MECHANISM

SOLENOID/PRESSURE SWITCH ASSEMBLY

REMOVAL

(1) Disconnect the battery cables.

(2) Remove air cleaner assembly (Fig. 68).

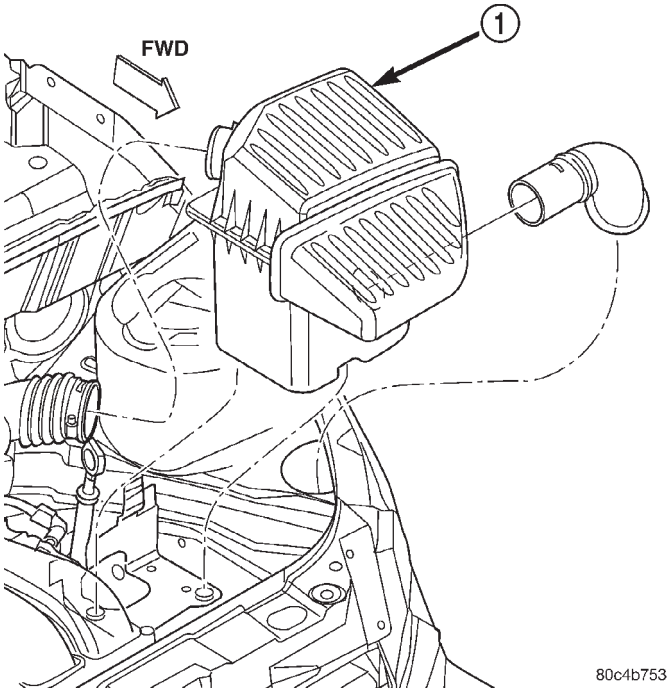

Fig. 68 Air Cleaner Assembly Removal/Installation

1 – AIR CLEANER ASSEMBLY

REMOVAL AND INSTALLATION (Continued)

(3) Remove the battery hold down clamp and remove the battery (Fig. 69).

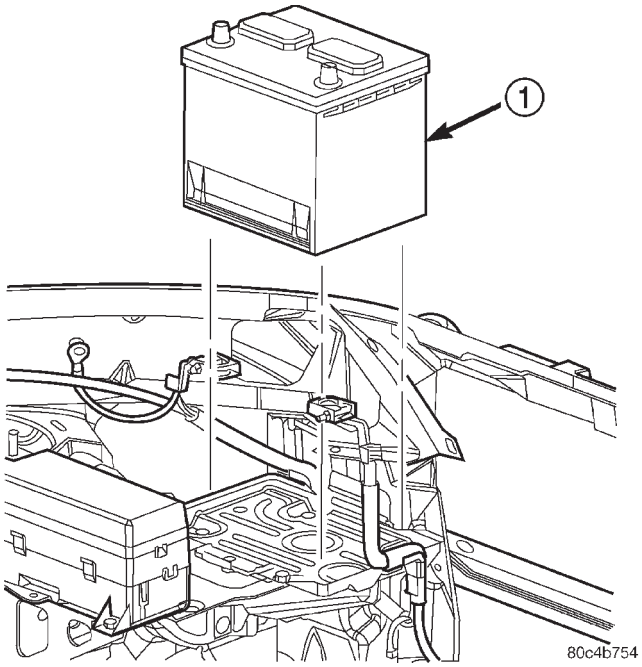

Fig. 69 Battery Removal/Installation

1 – BATTERY

(4) Remove the battery tray (Fig. 70).

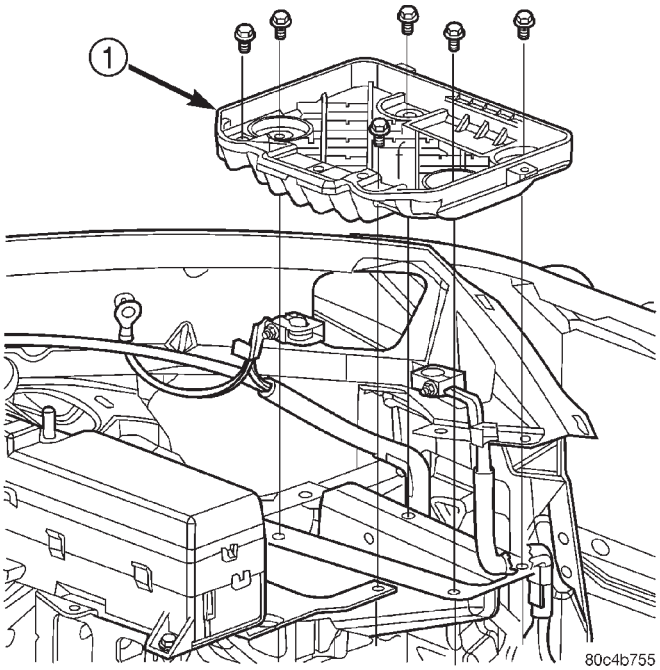

Fig. 70 Battery Tray Removal/Installation

1 – BATTERY TRAY

(5) Disconnect and remove the input speed sensor (Fig. 71).

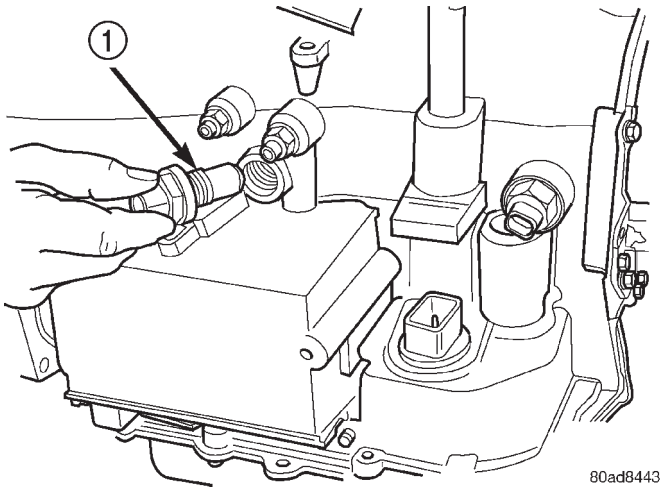

Fig. 71 Input Speed Sensor

1 – INPUT (TURBINE) SPEED SENSOR

(6) Disconnect the transmission oil cooler lines. Cap off hoses and fittings to prevent foreign matter intrusion.

(7) Disconnect the solenoid/pressure switch assembly connector.

(8) Remove the three solenoid/pressure switch assembly-to-transaxle case bolts (Fig. 72).

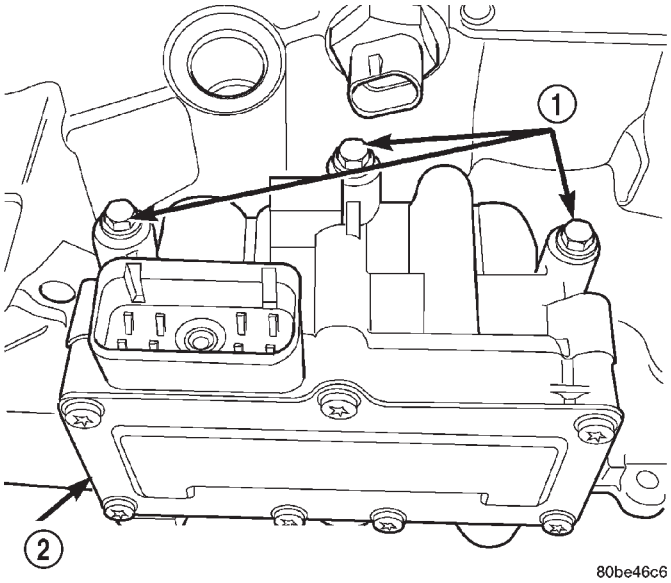

Fig. 72 Attaching Bolts

1 – BOLTS
2 – SOLENOID AND PRESSURE SWITCH ASSEMBLY

(9) Remove solenoid/pressure switch assembly and gasket (Fig. 73).

CAUTION: Be sure to keep foreign material from entering ports in transaxle case. Erratic transaxle operation and/or failure can result.

REMOVAL AND INSTALLATION (Continued)

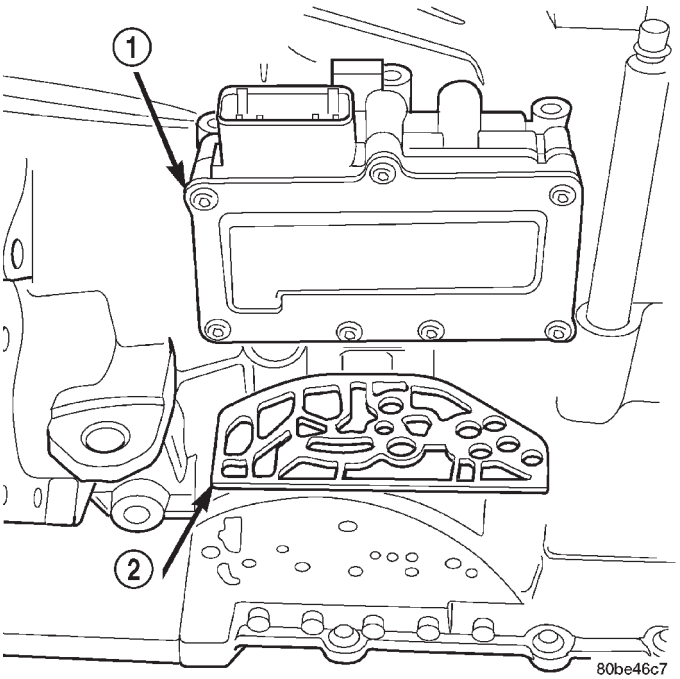

Fig. 73 Solenoid/Pressure Switch Assembly and Gasket

1 – SOLENOID/PRESSURE SWITCH ASSEMBLY
2 – GASKET

INSTALLATION

(1) Install solenoid/pressure switch assembly to case using a new gasket (Fig. 73).

(2) Install bolts and torque to 13 N·m (110 in. lbs.) (Fig. 72).

(3) Install 8-way connector and torque screw to 4 N·m (35 in. lbs.).

(4) Uncap and install transmission oil cooler lines.

(5) Install input speed sensor (Fig. 71) and torque to 27 N·m (20 ft. lbs.).

(6) Install the battery tray (Fig. 70).

(7) Install the battery and hold down clamp (Fig. 69).

(8) Install air cleaner assembly (Fig. 68).

(9) Connect battery cables.

(10) Perform Transaxle Quick Learn Procedure. Refer to SERVICE PROCEDURES.

TRANSMISSION RANGE SENSOR

The valve body assembly must be removed to gain access to and replace the transmission range sensor.

REMOVAL

(1) Disconnect the battery cables.

(2) Remove air cleaner assembly (Fig. 74).

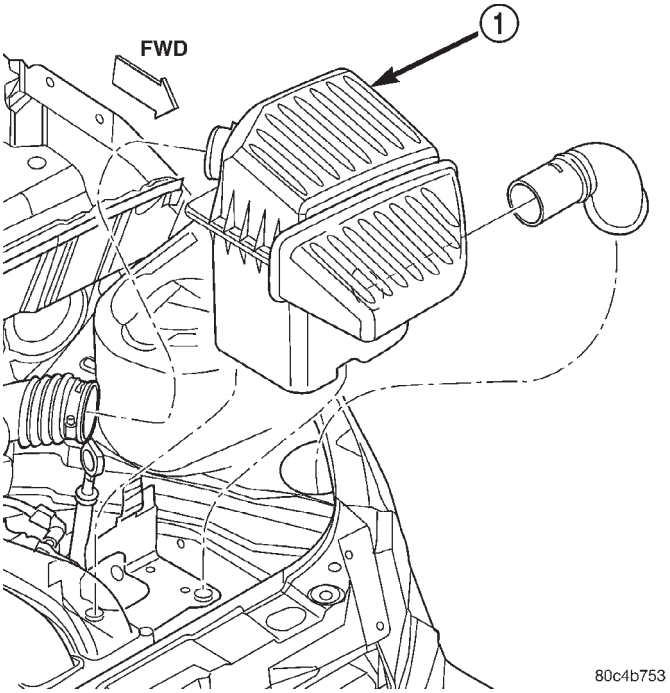

Fig. 74 Air Cleaner Assembly Removal/Installation

1 – AIR CLEANER ASSEMBLY

(3) Remove the battery hold down clamp and remove the battery (Fig. 75).

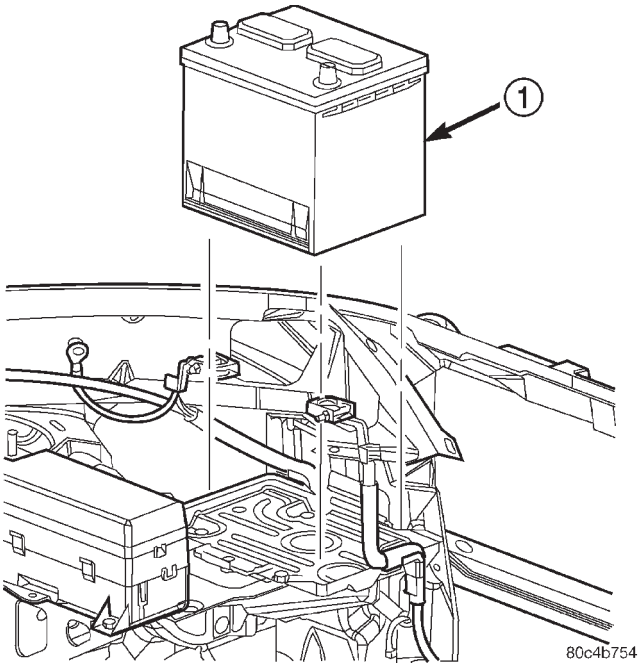

Fig. 75 Battery Removal/Installation

1 – BATTERY

REMOVAL AND INSTALLATION (Continued)

(4) Remove the battery tray (Fig. 76).

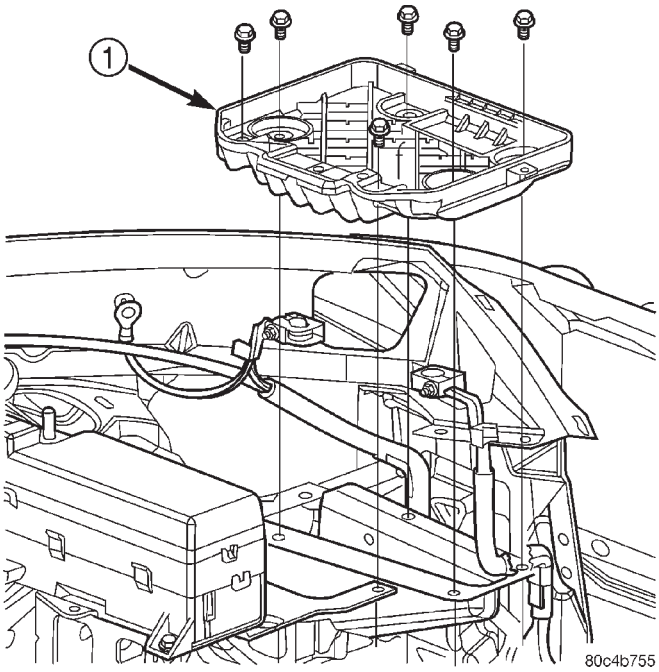

Fig. 76 Battery Tray Removal/Installation

1 – BATTERY TRAY

(5) Disconnect gearshift cable from manual valve lever (Fig. 77).

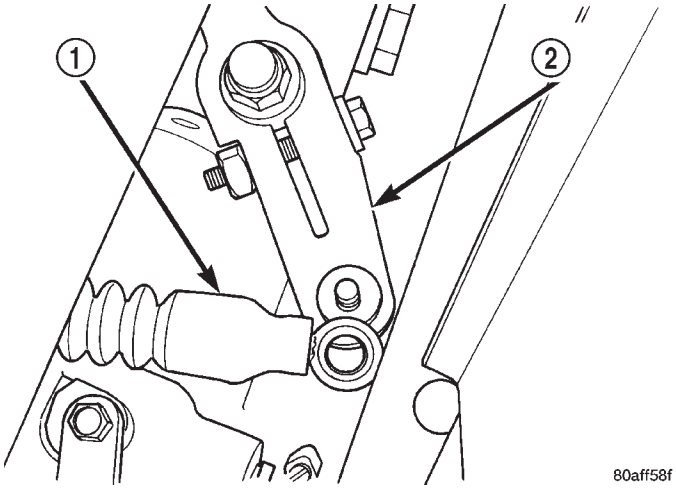

Fig. 77 Gearshift Cable at Lever

1 – SHIFT CABLE
2 – SHIFT LEVER

(6) Remove manual valve lever.

(7) Disconnect transmission range sensor connector.

(8) Hoist vehicle.

(9) Remove oil pan bolts (Fig. 78).

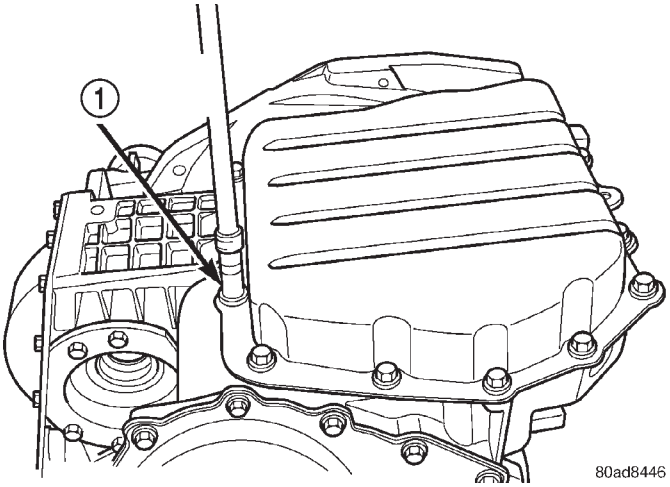

Fig. 78 Oil Pan Bolts

1 – OIL PAN BOLTS (USE RTV UNDER BOLT HEADS)

(10) Remove oil pan (Fig. 79).

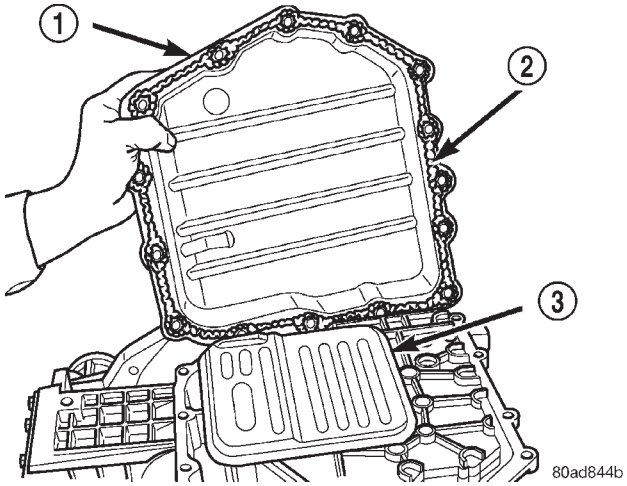

Fig. 79 Oil Pan

1 – OIL PAN
2 – 1/8 INCH BEAD OF RTV SEALANT
3 – OIL FILTER

REMOVAL AND INSTALLATION (Continued)

(11) Remove oil filter (Fig. 80).

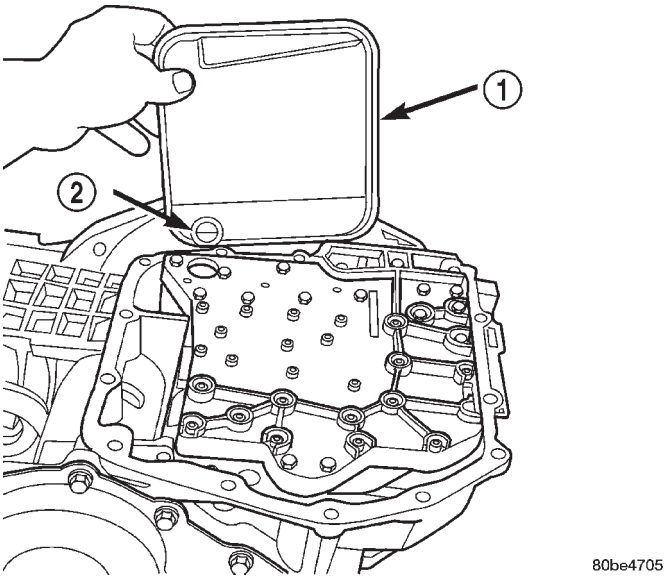

Fig. 80 Oil Filter

1 – OIL FILTER
2 – O-RING

(12) Remove the valve body-to-transaxle case bolts (Fig. 81).

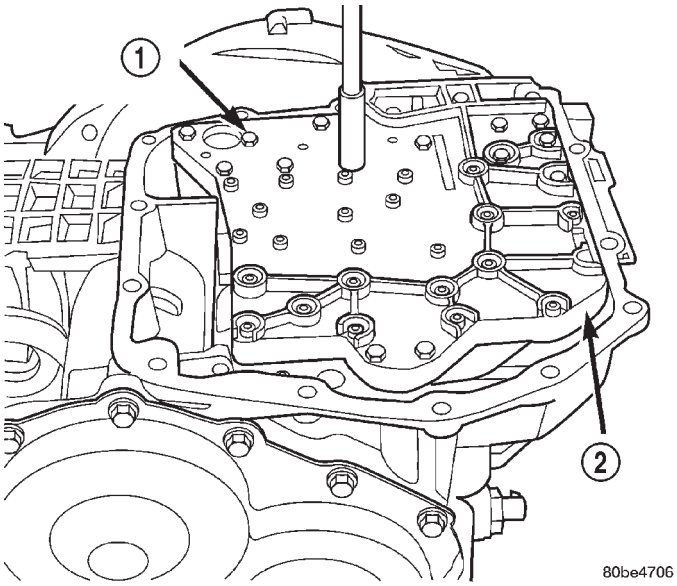

Fig. 81 Valve Body Attaching Bolts

1 – VALVE BODY ATTACHING BOLTS (18)
2 – VALVE BODY

NOTE: To ease removal of the valve body, turn the manual valve lever fully clockwise to low or first gear.

(13) Remove park rod rollers from guide bracket and remove valve body from transaxle (Fig. 82) (Fig. 83).

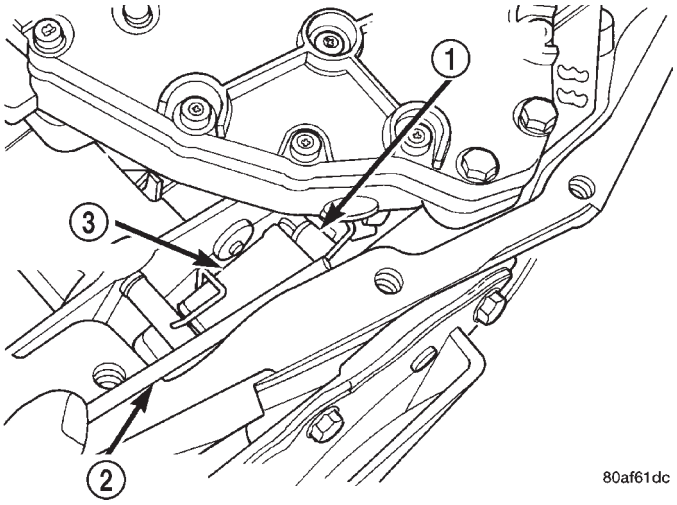

Fig. 82 Push Park Rod Rollers from Guide Bracket

1 – PARK SPRAG ROLLERS
2 – SCREWDRIVER
3 – PARK SPRAG GUIDE BRACKET

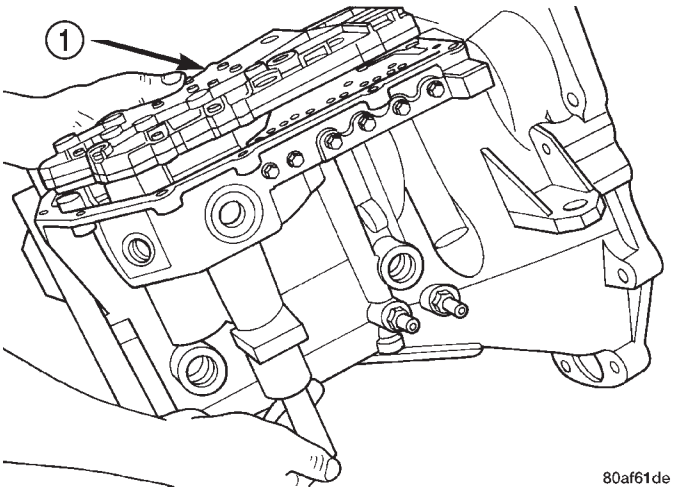

Fig. 83 Valve Body Removal/Installation

1 – VALVE BODY

REMOVAL AND INSTALLATION (Continued)

CAUTION: The valve body manual shaft pilot may distort and bind the manual valve if the valve body is mishandled or dropped.

(14) Remove manual shaft seal (Fig. 84).

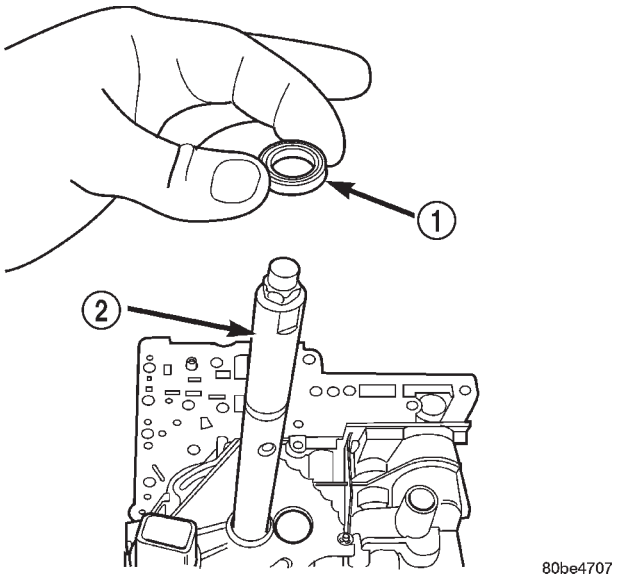

Fig. 84 Remove Manual Shaft Seal

1 – SEAL
2 – MANUAL SHAFT

(15) Remove TRS retaining screw (Fig. 85).

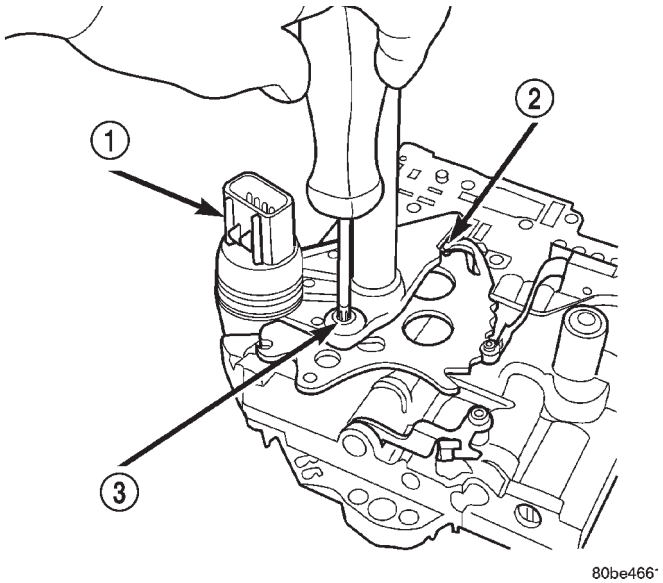

Fig. 85 Remove Retaining Screw

1 – TRANSMISSION RANGE SENSOR
2 – MANUAL VALVE CONTROL PIN
3 – RETAINING SCREW

(16) Slide Transmission Range Sensor up the manual shaft and remove (Fig. 86).

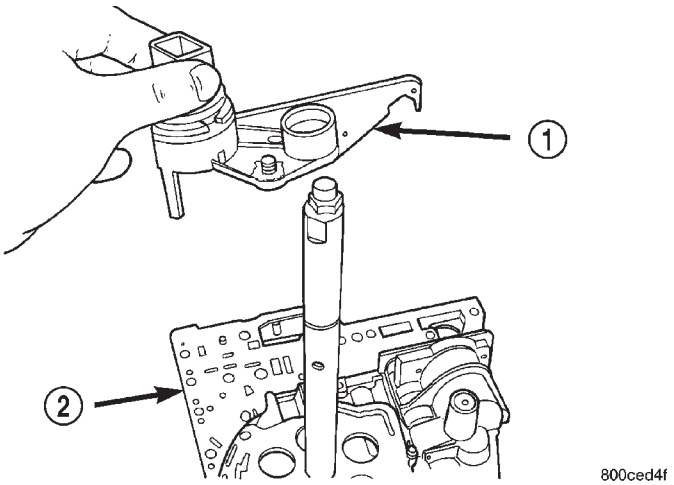

Fig. 86 Remove Transmission Range Sensor

1 – TRANSMISSION RANGE SENSOR
2 – VALVE BODY

INSTALLATION

(1) Install transmission range sensor (Fig. 86).

(2) Tighten retaining screw (Fig. 85) to 5 N·m (45 in. lbs.).

(3) Install manual shaft seal (Fig. 84).

(4) Guide park rod rollers into guide bracket while installing valve body to the transaxle case (Fig. 82) (Fig. 83).

(5) Install the valve body-to-case bolts (Fig. 81) and torque to 12 N·m (105 in. lbs.).

(6) Install the oil filter (Fig. 80). Inspect the o-ring for damage and replace as necessary.

(7) Install an 1/8' bead of RTV as shown in (Fig. 79) and install pan to case.

(8) Install oil pan bolts (Fig. 78) and torque to 19 N·m (165 in. lbs.) torque.

(9) Lower vehicle.

(10) Connect transmission range sensor connector.

(11) Install manual valve lever to manual valve.

(12) Install gear shift cable to manual valve lever (Fig. 77).

(13) Install the battery tray (Fig. 76).

(14) Install the battery and hold down clamp (Fig. 75).

(15) Install air cleaner assembly (Fig. 74).

(16) Connect battery cables.

(17) Fill transaxle with ATF+4 (Automatic Transmission Fluid–Type 9602). Refer to Fluid Level and Condition in this Group.

INPUT SPEED SENSOR

CAUTION: When disconnecting speed sensor connector, be sure that the connector weather seal does not fall off or remain in old sensor.

REMOVAL AND INSTALLATION (Continued)

REMOVAL

(1) Disconnect the battery cables.
(2) Remove air cleaner assembly (Fig. 87).

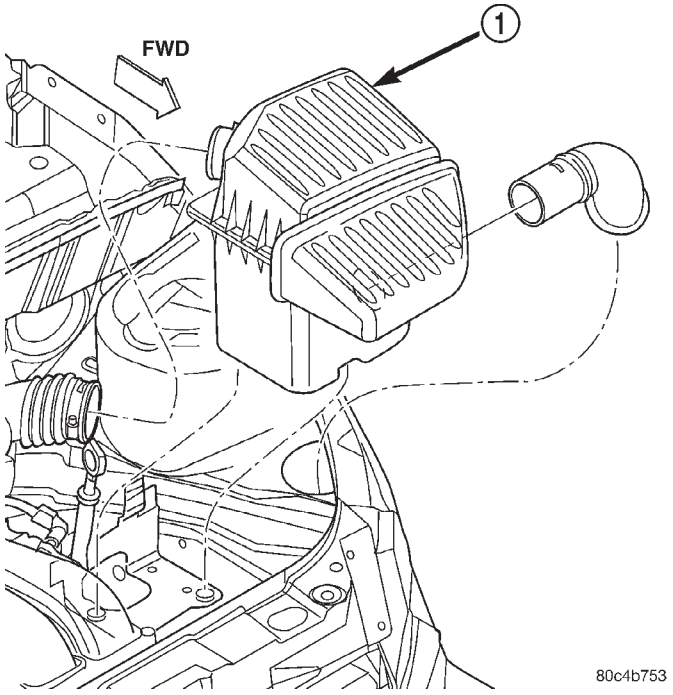

Fig. 87 Air Cleaner Assembly Removal/Installation
1 – AIR CLEANER ASSEMBLY

(3) Remove the battery hold down clamp and remove the battery (Fig. 88).

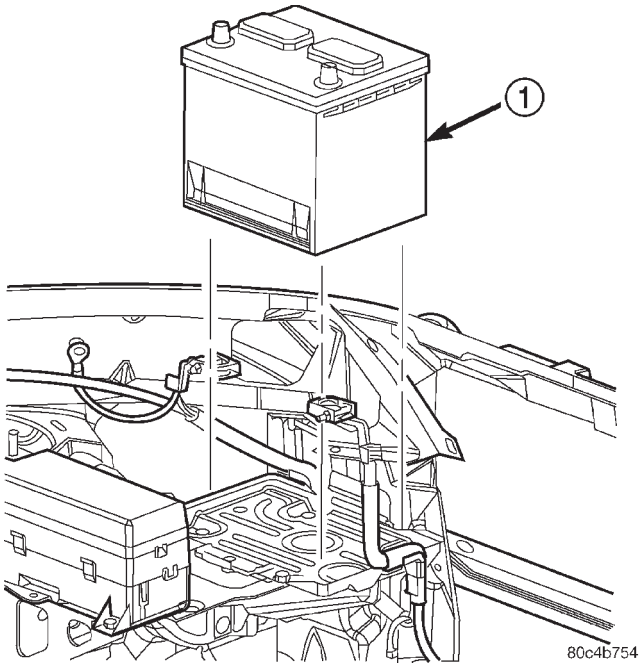

Fig. 88 Battery Removal/Installation
1 – BATTERY

(4) Remove the battery tray (Fig. 89).

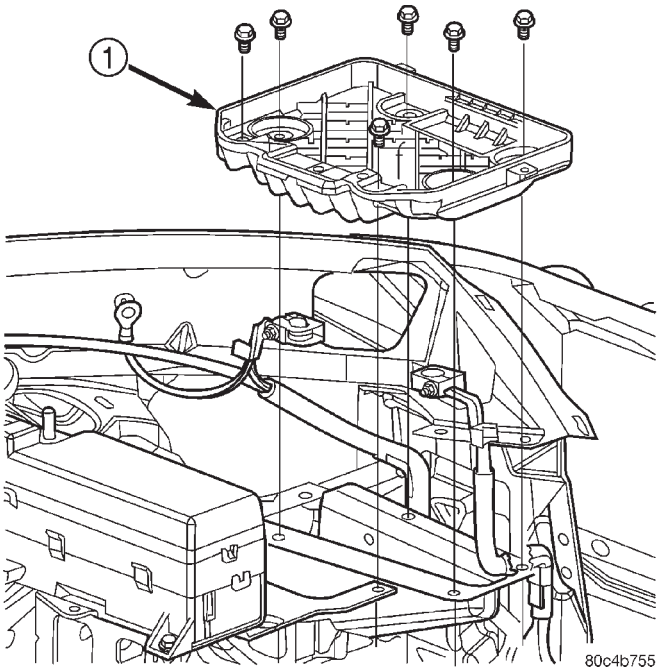

Fig. 89 Battery Tray Removal/Installation
1 – BATTERY TRAY

(5) Disconnect input speed sensor connector.
(6) Unscrew and remove input speed sensor (Fig. 90).
(7) Inspect speed sensor o-ring (Fig. 91) and replace if necessary.

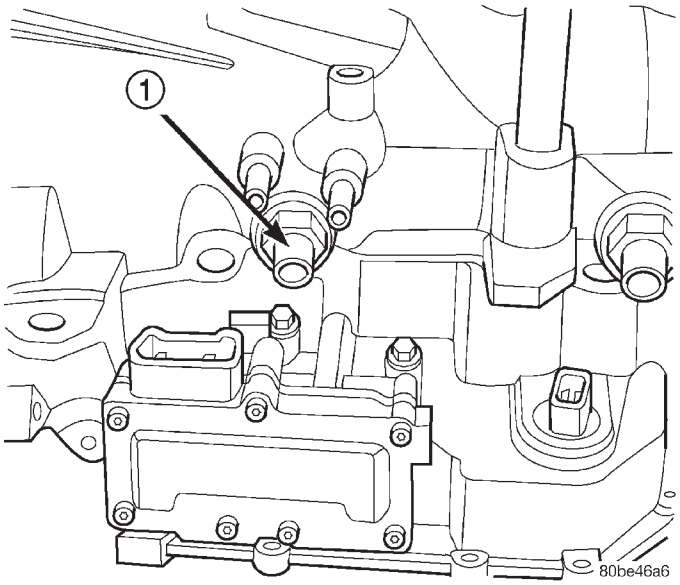

Fig. 90 Input (Turbine) Speed Sensor
1 – INPUT SPEED SENSOR

REMOVAL AND INSTALLATION (Continued)

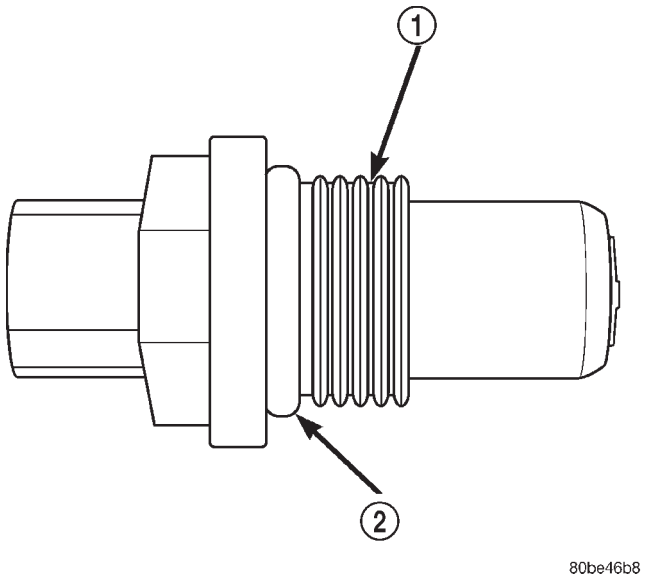

Fig. 91 O-ring Location

1 – INPUT SPEED SENSOR
2 – O-RING

INSTALLATION

(1) Verify o-ring is installed into position.
(2) Install and tighten input speed sensor to 27 N·m (20 ft. lbs.).
(3) Connect speed sensor connector.
(4) Install the battery tray (Fig. 89).
(5) Install the battery and hold down clamp (Fig. 88).
(6) Install air cleaner assembly (Fig. 87).
(7) Connect battery cables.

OUTPUT SPEED SENSOR

CAUTION: When disconnecting speed sensor connector, be sure that the connector weather seal does not fall off or remain in old sensor.

REMOVAL

(1) Disconnect the battery cables.
(2) Remove air cleaner assembly (Fig. 92).
(3) Remove the battery hold down clamp and remove the battery (Fig. 93).
(4) Remove the battery tray (Fig. 94).
(5) Disconnect ouput speed sensor connector.
(6) Unscrew and remove output speed sensor (Fig. 95).
(7) Inspect speed sensor o-ring (Fig. 96) and replace if necessary.

INSTALLATION

(1) Verify o-ring is installed into position (Fig. 96).
(2) Install and tighten output speed sensor to 27 N·m (20 ft. lbs.).

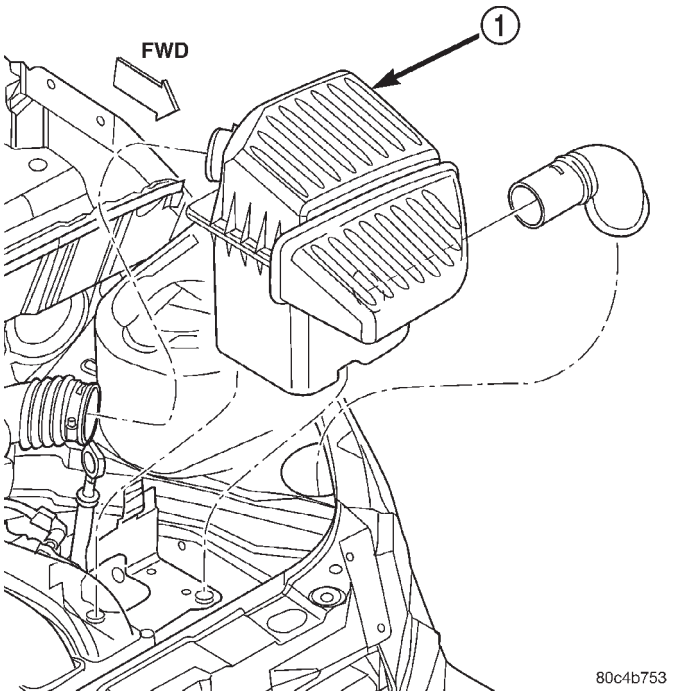

Fig. 92 Air Cleaner Assembly Removal/Installation

1 – AIR CLEANER ASSEMBLY

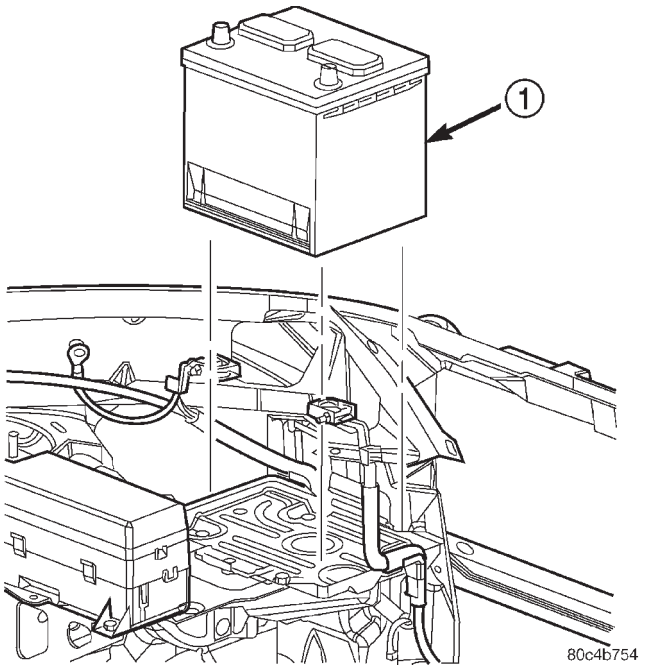

Fig. 93 Battery Removal/Installation

1 – BATTERY

(3) Connect speed sensor connector.
(4) Install the battery tray (Fig. 94).
(5) Install the battery and hold down clamp (Fig. 93).
(6) Install air cleaner assembly (Fig. 92).

REMOVAL AND INSTALLATION (Continued)

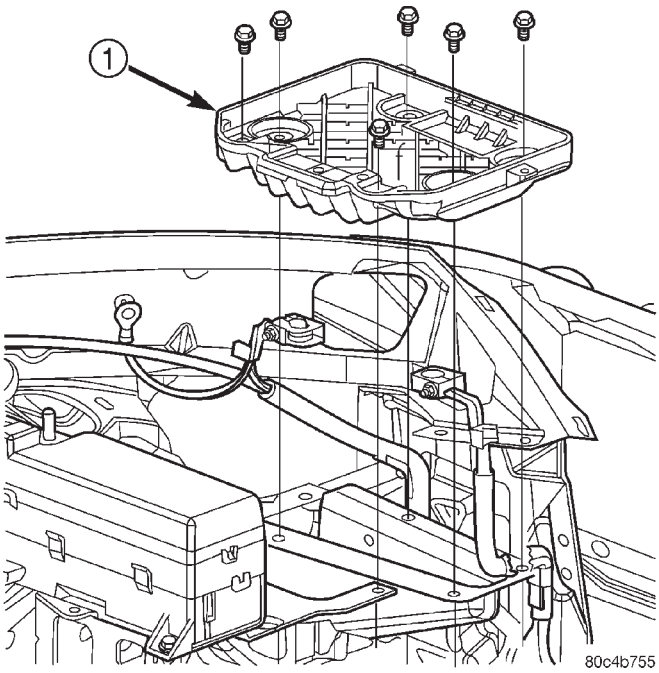

Fig. 94 Battery Tray Removal/Installation

1 – BATTERY TRAY

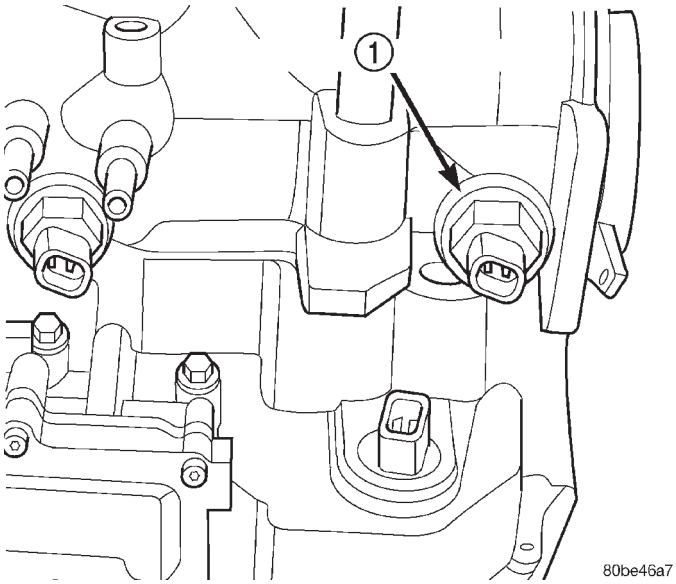

Fig. 95 Output Speed Sensor

1 – OUTPUT SPEED SENSOR

TRANSMISSION CONTROL MODULE

REMOVAL

NOTE: If the TCM is being replaced with a NEW or replacement unit, the Quick Learn AND Pinion Factor procedures must be performed. Refer to Service Procedures for proper procedures.

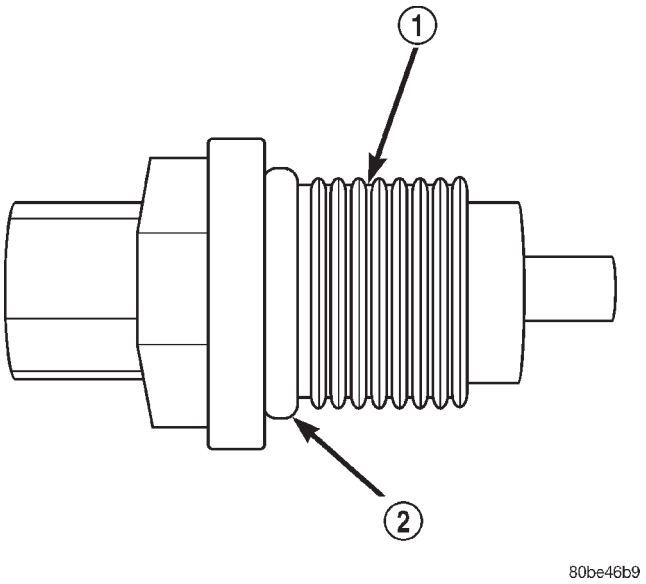

Fig. 96 O-ring Location

1 – OUTPUT SPEED SENSOR
2 – O-RING

(1) Disconnect battery negative cable.
(2) Raise vehicle on hoist.
(3) Remove left front wheel/tire assembly (Fig. 97).

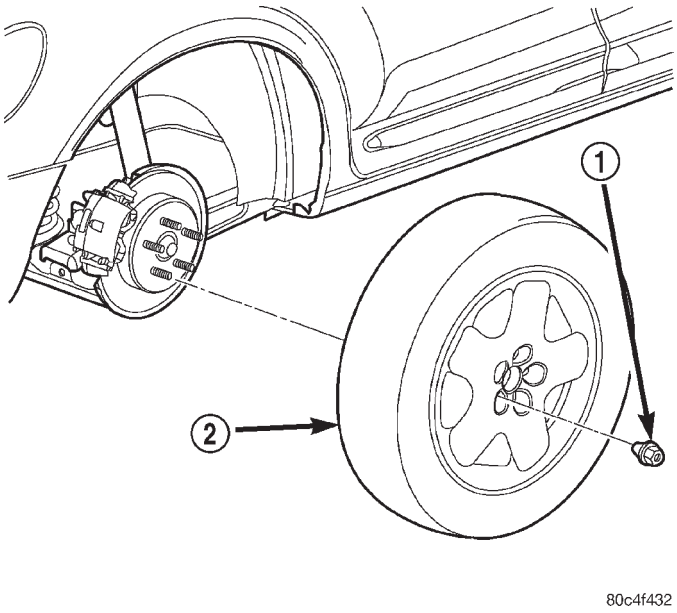

Fig. 97 Wheel/Tire Removal/Installation

1 – LUG NUT
2 – WHEEL/TIRE

(4) Remove wheel house splash shield.
(5) Remove TCM 60-way connector.
(6) Remove three TCM bracket-to-body mounting screws (Fig. 98).
(7) Remove TCM from bracket (Fig. 98).

REMOVAL AND INSTALLATION (Continued)

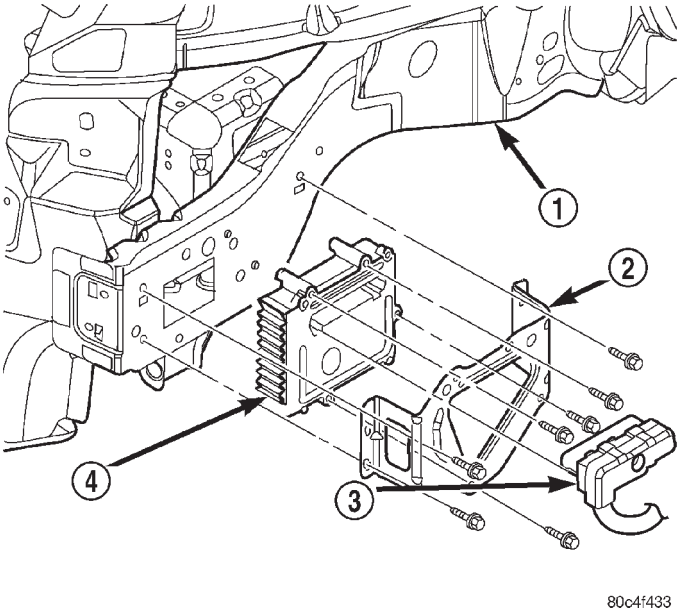

Fig. 98 TCM Removal/Installation

1 – LEFT RAIL
2 – BRACKET
3 – 60-WAY HARNESS CONNECTOR
4 – TRANSMISSION CONTROL MODULE (TCM)

INSTALLATION

(1) Install TCM to mounting bracket and tighten four screws to 11 N·m (100 in. lbs.).

(2) Install TCM/bracket assembly and fasten with three mounting screws (Fig. 98). Torque screws to 11 N·m (100 in. lbs.) torque.

CAUTION: TCM 60-way connector must be torqued within 30-40 in. lbs. Improper torque may result in connector damage.

(3) Connect the TCM 60-way connector and torque to 4 N·m (35 in. lbs.).

(4) Install wheel house splash shield.

(5) Install left front wheel/tire assembly (Fig. 97). Torque lug nuts to 135 N·m (100 ft. lbs.) torque.

(6) Lower vehicle.

(7) Connect the battery negative cable.

NOTE: If the TCM is being replaced with a NEW or replacement unit, the Quick Learn AND Pinion Factor procedures must be performed. Refer to Service Procedures for proper procedures.

VALVE BODY

REMOVAL

(1) Disconnect the battery cables.

(2) Remove air cleaner assembly (Fig. 99).

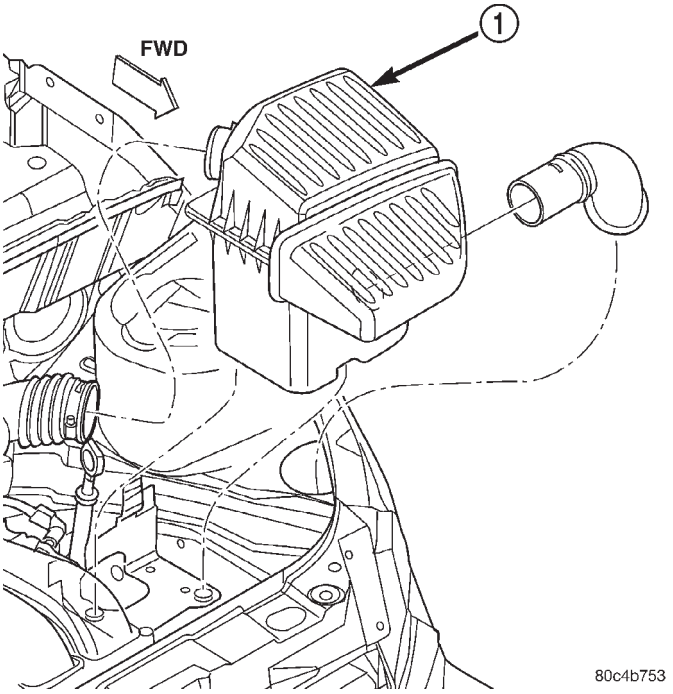

Fig. 99 Air Cleaner Assembly Removal/Installation

1 – AIR CLEANER ASSEMBLY

(3) Remove the battery hold down clamp and remove the battery (Fig. 100).

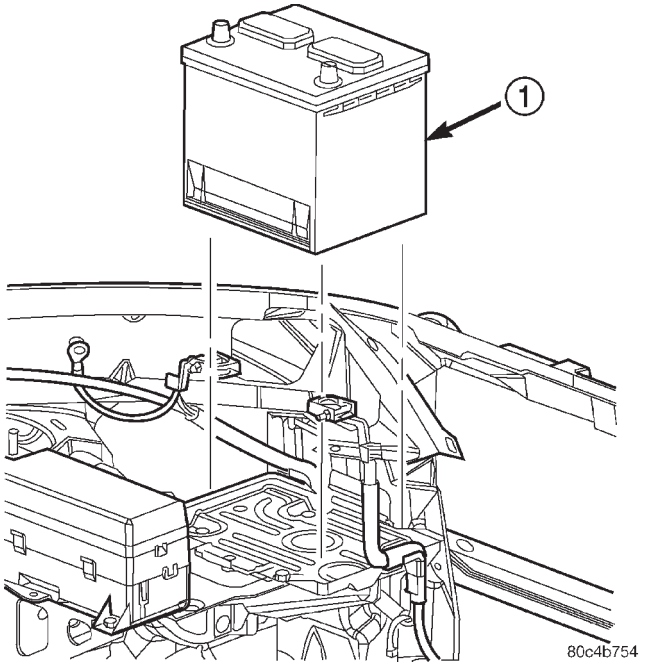

Fig. 100 Battery Removal/Installation

1 – BATTERY

(4) Remove the battery tray (Fig. 101).

(5) Disconnect gearshift cable from manual valve lever (Fig. 102).

REMOVAL AND INSTALLATION (Continued)

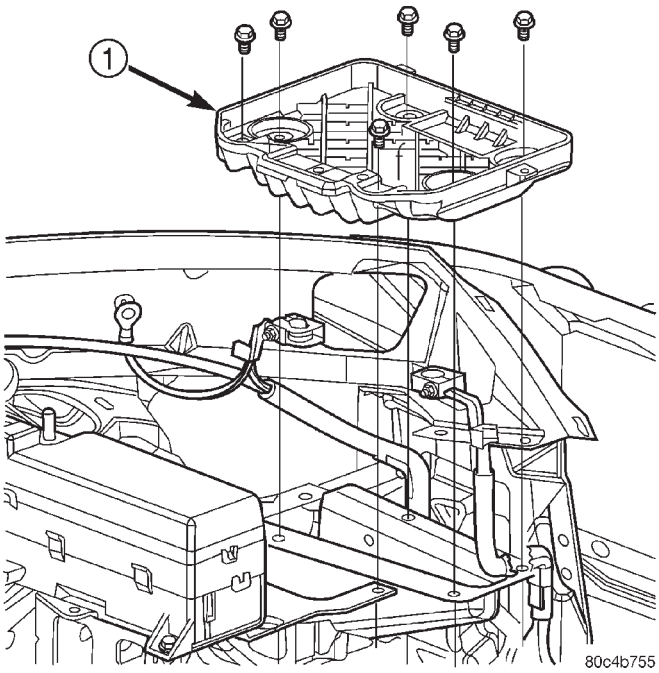

Fig. 101 Battery Tray Removal/Installation

1 – BATTERY TRAY

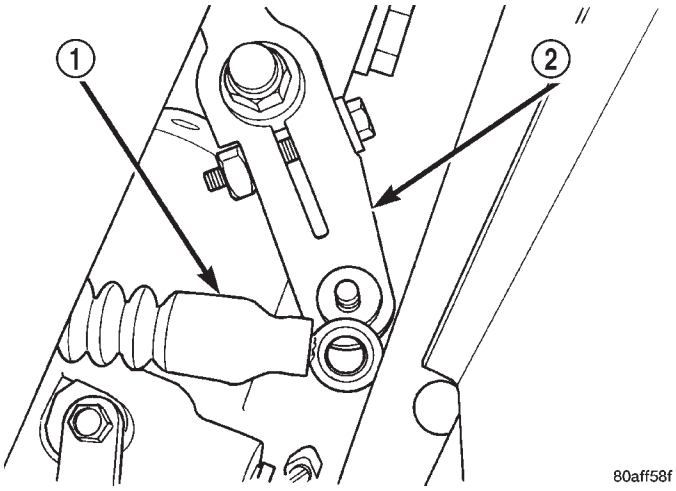

Fig. 102 Gearshift Cable at Manual Valve Lever

1 – SHIFT CABLE
2 – SHIFT LEVER

(6) Remove manual valve lever from manual shaft.
(7) Raise vehicle on hoist.
(8) Remove oil pan bolts (Fig. 103).

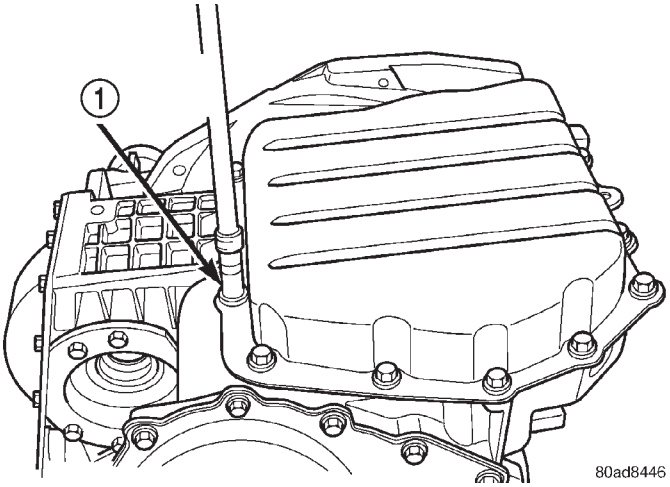

Fig. 103 Oil Pan Bolts

1 – OIL PAN BOLTS (USE RTV UNDER BOLT HEADS)

(9) Remove oil pan (Fig. 104).

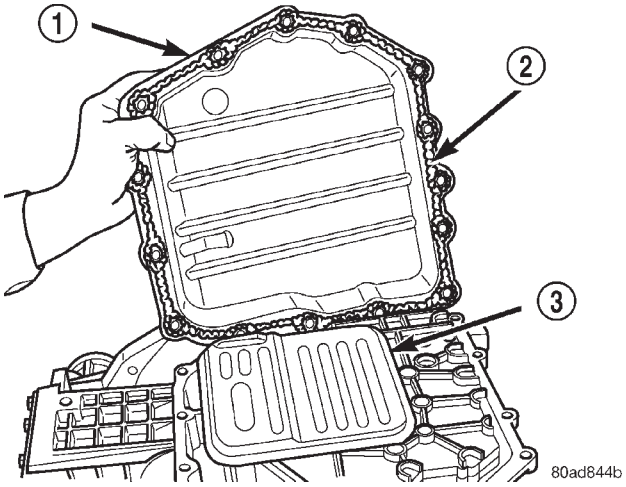

Fig. 104 Oil Pan

1 – OIL PAN
2 – 1/8 INCH BEAD OF RTV SEALANT
3 – OIL FILTER

REMOVAL AND INSTALLATION (Continued)

(10) Remove oil filter (Fig. 105).

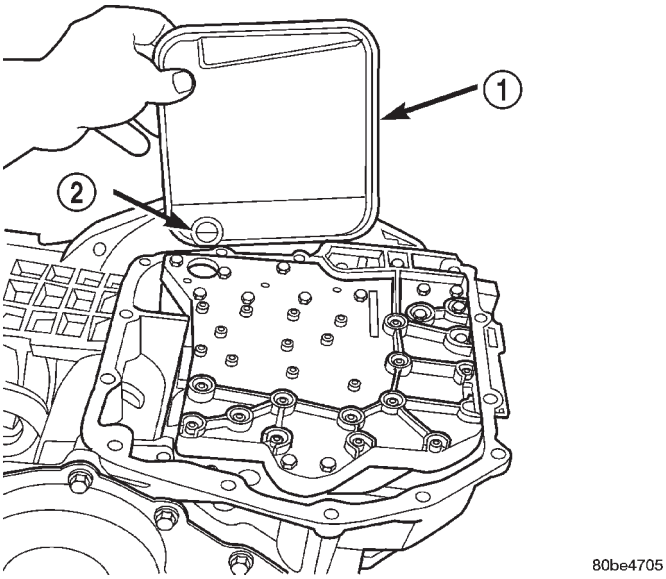

Fig. 105 Oil Filter

1 – OIL FILTER
2 – O-RING

(11) Remove the valve body-to-transaxle case bolts (Fig. 106).

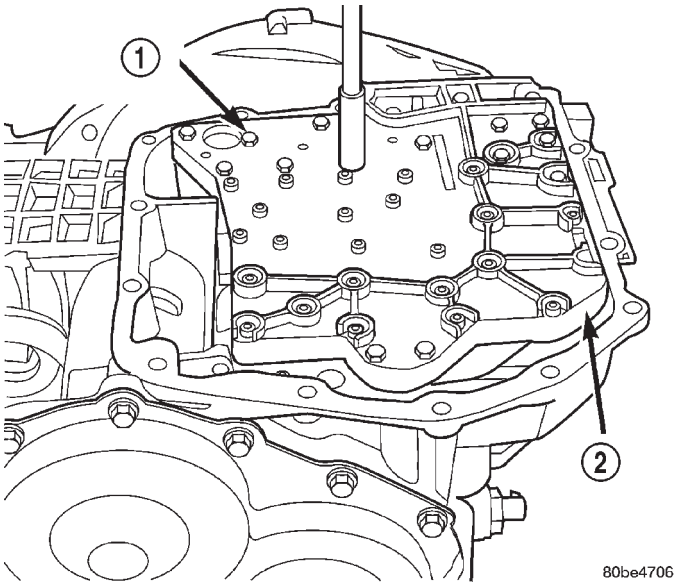

Fig. 106 Valve Body Attaching Bolts

1 – VALVE BODY ATTACHING BOLTS (18)
2 – VALVE BODY

NOTE: To ease removal of the valve body, turn the manual valve lever fully clockwise to low or first gear.

(12) Remove park rod rollers from guide bracket and remove valve body from transaxle (Fig. 107) (Fig. 108).

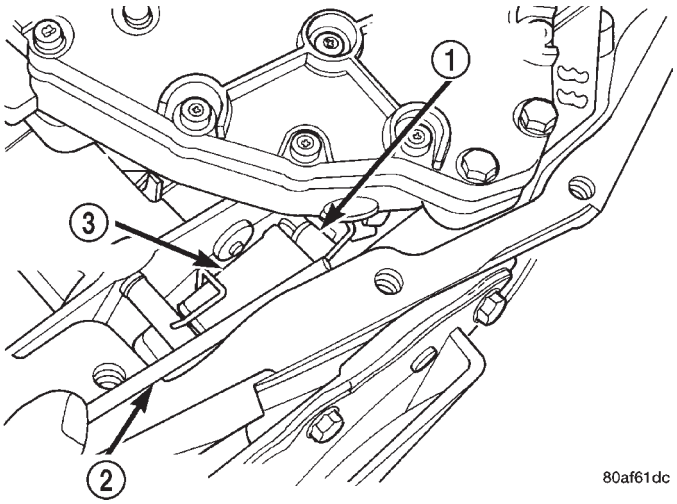

Fig. 107 Push Park Rod Rollers from Guide Bracket

1 – PARK SPRAG ROLLERS
2 – SCREWDRIVER
3 – PARK SPRAG GUIDE BRACKET

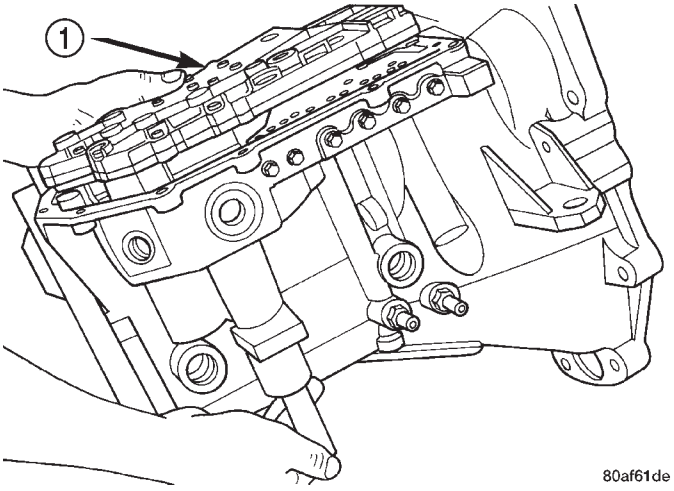

Fig. 108 Valve Body Removal/Installation

1 – VALVE BODY

CAUTION: The valve body manual shaft pilot may distort and bind the manual valve if the valve body is mishandled or dropped.

INSTALLATION

NOTE: To ease installation of the valve body, turn the manual valve lever fully clockwise.

REMOVAL AND INSTALLATION (Continued)

(1) Guide park rod rollers into guide bracket while installing valve body to the transaxle case (Fig. 107) (Fig. 108).
(2) Install the valve body-to-case bolts (Fig. 106) and torque to 12 N·m (105 in. lbs.).
(3) Install the oil filter (Fig. 105). Inspect the o-ring for damage and replace as necessary.
(4) Install an 1/8' bead of RTV as shown in (Fig. 104) and install pan to case.
(5) Install oil pan bolts (Fig. 103) and torque to 19 N·m (165 in. lbs.) torque.
(6) Lower vehicle.
(7) Install manual valve lever to manual shaft.
(8) Install gearshift cable to manual valve lever (Fig. 102).
(9) Install the battery tray (Fig. 101).
(10) Install the battery and hold down clamp (Fig. 100).
(11) Install air cleaner assembly (Fig. 99).
(12) Connect battery cables.
(13) Fill transaxle with fluid. Refer to SERVICE PROCEDURES for proper fluid fill procedure.

TRANSAXLE

REMOVAL

(1) Disconnect battery cables.
(2) Remove air cleaner assembly (Fig. 109).

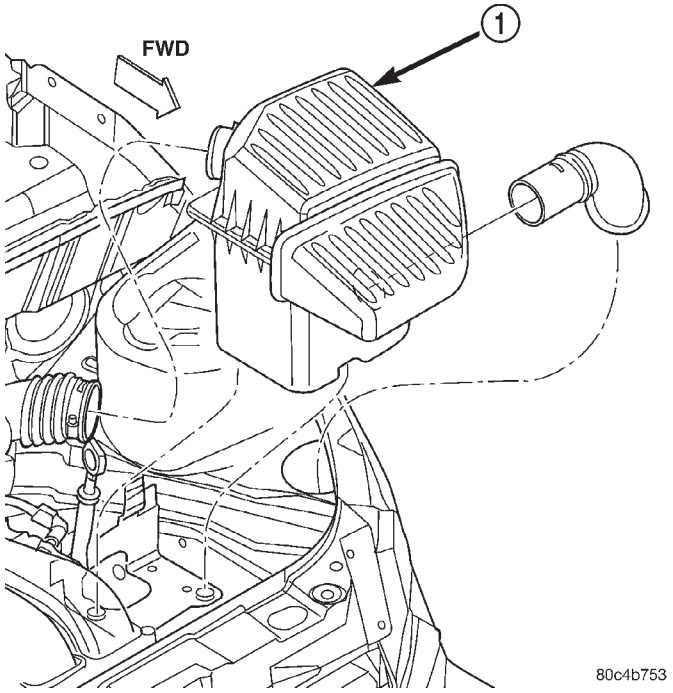

Fig. 109 Air Cleaner Assembly Removal/Installation
1 – AIR CLEANER ASSEMBLY

(3) Remove battery (Fig. 110).
(4) Remove battery tray (Fig. 111).

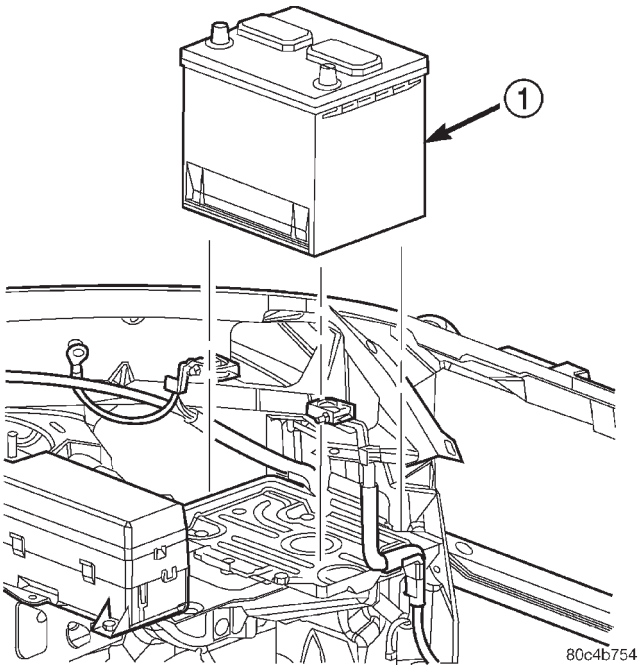

Fig. 110 Battery Removal/Installation
1 – BATTERY

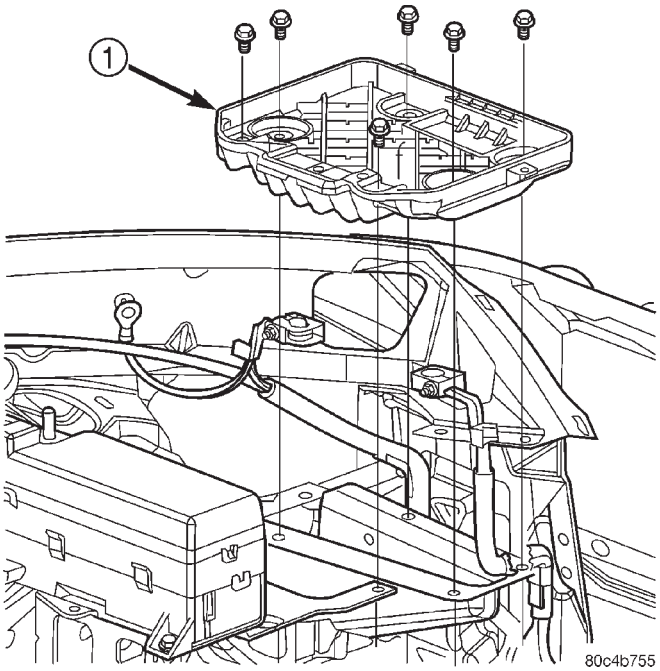

Fig. 111 Battery Tray Removal/Installation
1 – BATTERY TRAY

(5) Remove uppermost starter-to-transaxle bell-housing bolt and remove transaxle dipstick & tube. Plug hole to prevent debris from entering transaxle.
(6) Disconnect gearshift cable from manual valve lever. Remove gearshift cable from trans mount bracket and position cable out of the way.

REMOVAL AND INSTALLATION (Continued)

(7) Disconnect cooler lines at transaxle and plug holes to prevent debris from entering transaxle.

(8) Disconnect input speed sensor connector (Fig. 112).

(9) Disconnect output speed sensor connector (Fig. 112).

(10) Disconnect transmission range sensor connector (Fig. 112).

(11) Disconnect solenoid/pressure switch assembly connector (Fig. 112).

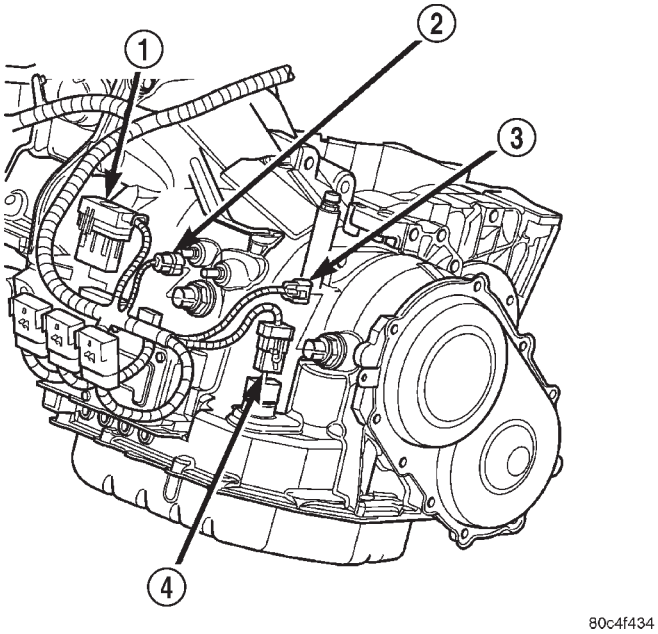

Fig. 112 Component Connector Location

1 – SOLENOID/PRESSURE SWITCH ASSY. CONNECTOR
2 – INPUT SPEED SENSOR CONNECTOR
3 – OUTPUT SPEED SENSOR CONNECTOR
4 – TRANSMISSION RANGE SENSOR CONNECTOR

(12) Raise vehicle on hoist.

(13) Remove front wheel covers (if equipped) and front wheel/tire assemblies.

(14) Remove left splash shield.

(15) Remove left and right halfshaft assemblies. Refer to DIFFERENTIAL AND DRIVELINE for proper procedures.

(16) Disconnect power steering hose from structural collar (Fig. 113)

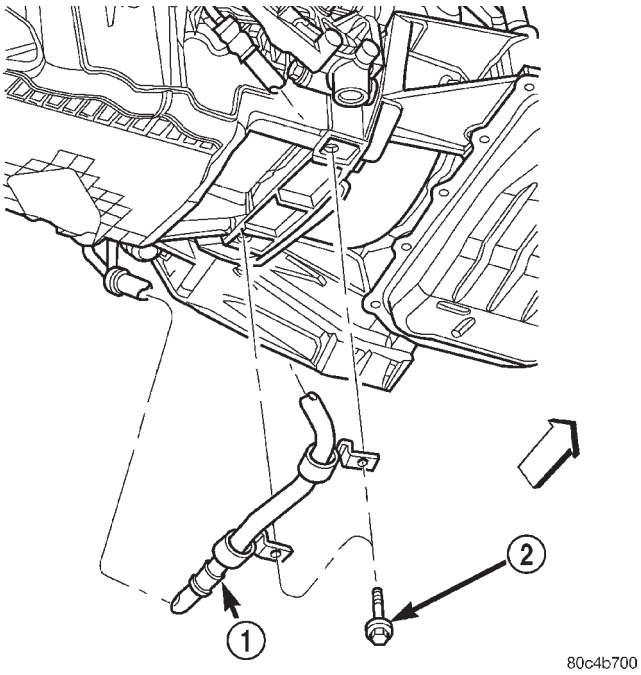

Fig. 113 Power Steering Hose to Structural Collar

1 – POWER STEERING HOSE
2 – BOLT

(17) Remove the left engine-to-transaxle lateral bending brace and structural collar (Fig. 114).

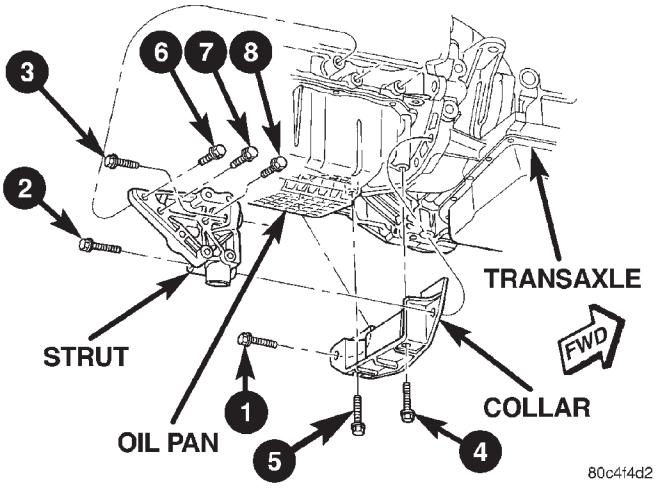

Fig. 114 Left Lateral Bending Brace and Structural Collar—Typical

REMOVAL AND INSTALLATION (Continued)

(18) Remove bellhousing dust cover (Fig. 115).

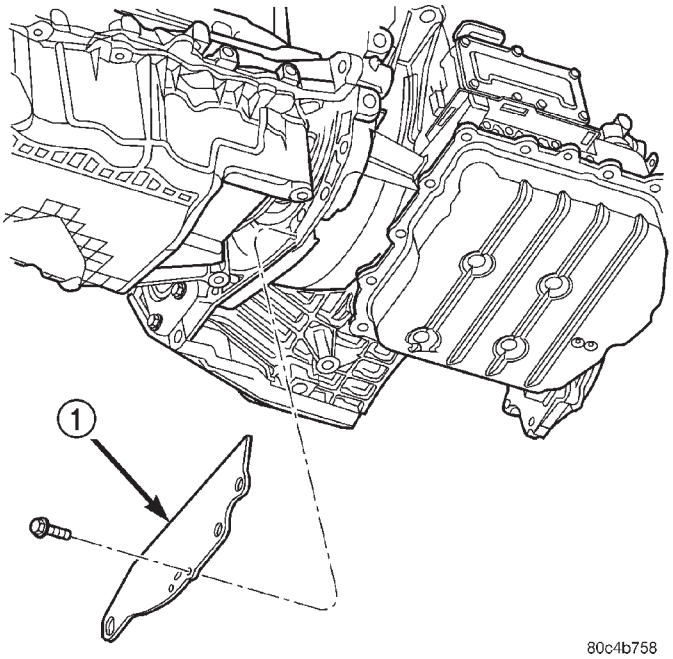

Fig. 115 Bellhousing Dust Cover Removal/ Installation

1 – DUST COVER

(19) Remove the right engine-to-transaxle lateral bending brace (Fig. 116).

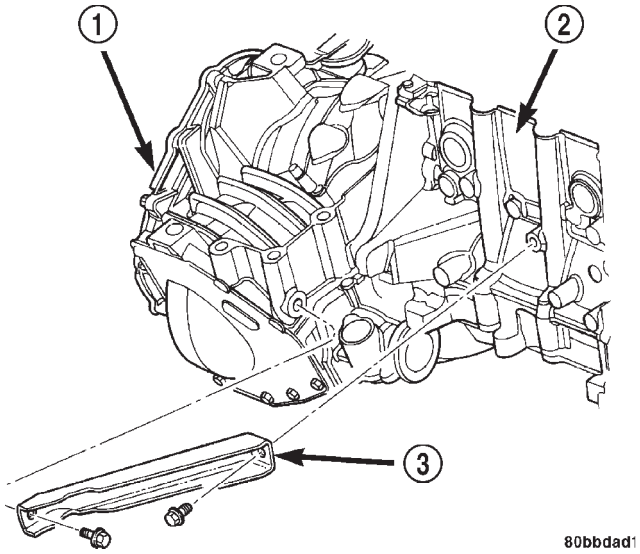

Fig. 116 Right Lateral Bending Brace Removal/ Installation—Typical

1 – TRANSAXLE
2 – ENGINE
3 – LATERAL BENDING BRACE

(20) Disconnect starter motor electrical connections.

(21) Remove starter motor (Fig. 117).

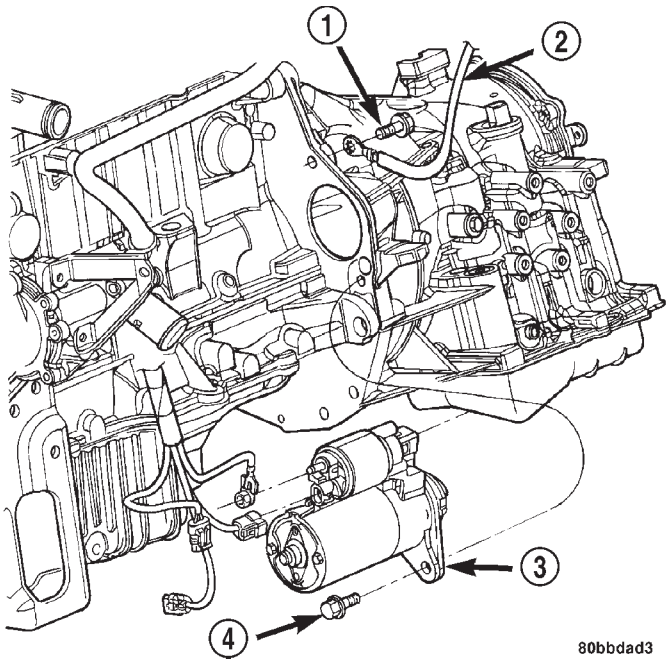

Fig. 117 Starter Motor Removal/Installation—Typical

1 – BOLT
2 – GROUND
3 – STARTER
4 – BOLT

(22) Remove lower starter-to-transaxle bellhousing lower bolt and position starter motor out of the way.

(23) Remove gearshift cable bracket. Position cable out of the way.

(24) Remove four drive plate-to-torque converter bolts.

(25) Support engine assembly with screw jack and wood block.

(26) Remove transmission upper mount to bracket bolts (Fig. 118).

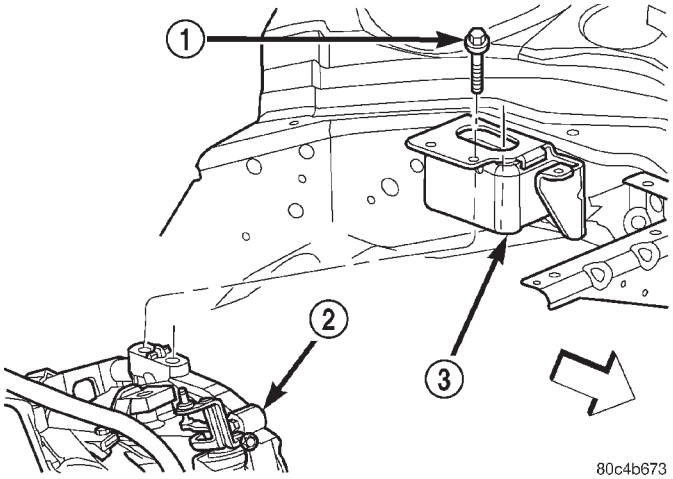

Fig. 118 Transaxle Upper Mount

1 – BOLT
2 – TRANSAXLE
3 – LEFT MOUNT

REMOVAL AND INSTALLATION (Continued)

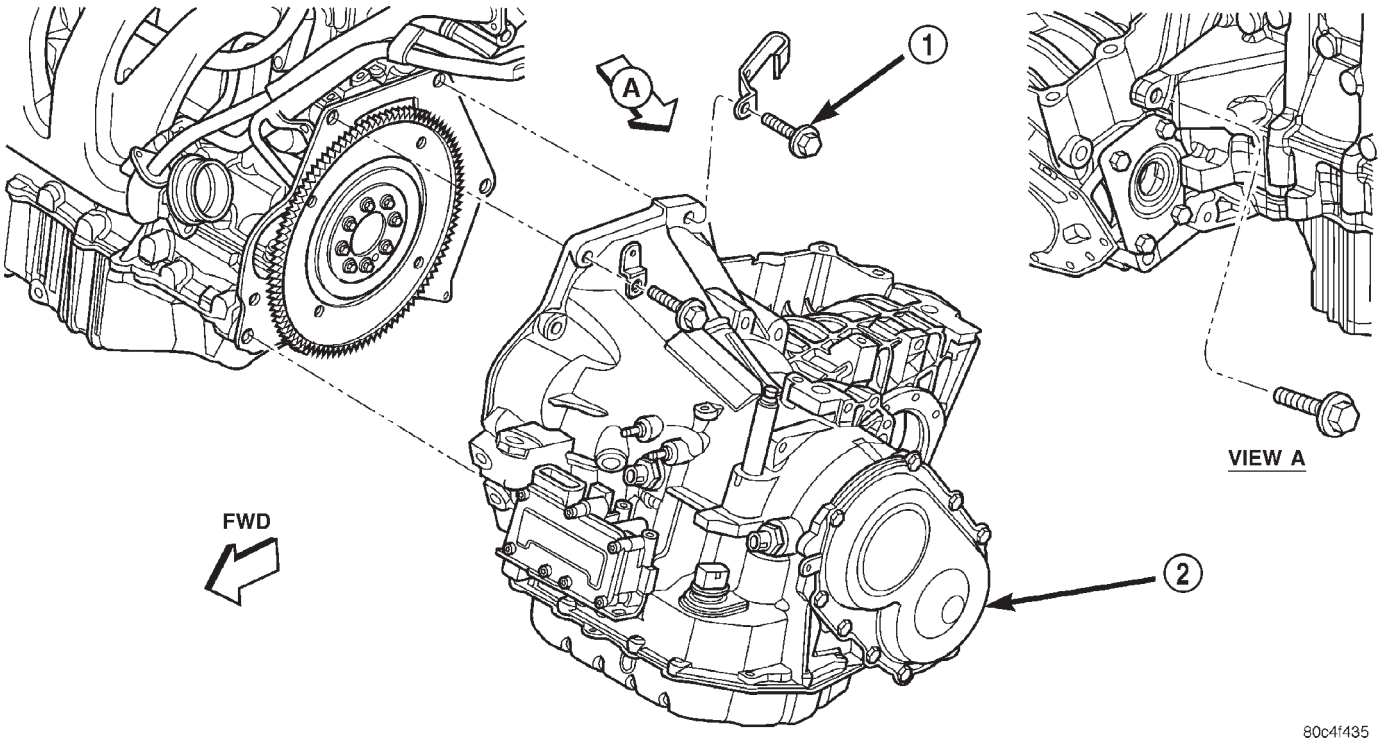

Fig. 119 Transaxle Removal/Installation

1 – BOLT (3)
2 – TRANSAXLE

(27) Lower engine/transaxle to gain access to and remove transaxle-to-engine bolts (Fig. 119).

(28) Remove transaxle from vehicle.

(29) If replacing transaxle, remove upper mount bracket and gearshift cable bracket and transfer to new/replacement transaxle.

INSTALLATION

(1) Install transaxle to engine (Fig. 119). Install and torque transaxle-to-engine bolts to 108 N·m (80 ft. lbs.).

(2) Raise engine/transaxle assembly enough line up transaxle mount bracket. Install two mount-to-transaxle bracket bolts (Fig. 118) and torque to 68 N·m (50 ft. lbs.).

(3) Remove screw jack support.

(4) Install four drive plate-to-torque converter bolts and torque to 88 N·m (65 ft. lbs.) torque.

(5) Position starter into place and hand-tighten lower bolt.

(6) Lower vehicle.

(7) Install transaxle dipstick tube. Verify that openings are free of debris and o-ring seal is intact. Replace o-ring if necessary. Secure bracket to transaxle. Install starter upper bolt through the ground cable and torque to (40 ft. lbs.).

(8) Install cable bracket-to-transaxle bellhousing bolt and torque to 61 N·m (45 ft. lbs.).

(9) Raise vehicle.

(10) Torque starter lower bolt (Fig. 117) to 54 N·m (40 ft. lbs.).

(11) Connect starter motor electrical connections.

(12) Install bellhousing dust cover (Fig. 115).

(13) Install structural collar and left (front) lateral bending brace. Refer to ENGINE for proper procedures (Fig. 114).

(14) Install right (rear) lateral bending brace (Fig. 116). Torque bolts to 81 N·m (60 ft. lbs.) torque.

(15) Install power steering line to structural collar (Fig. 113).

(16) Install front halfshafts. Refer to DIFFERENTIAL AND DRIVELINE for proper procedures and torque specifications.

(17) Install left splash shield.

(18) Install left wheel/tire assembly. Torque lug nuts to 136 N·m (100 ft. lbs.) torque.

(19) Lower vehicle.

(20) Connect cooler lines to transaxle and secure with constant-tension clamps.

(21) Connect solenoid/pressure switch assembly connector (Fig. 112).

(22) Connect transmission range sensor connector (Fig. 112).

(23) Connect output speed sensor connector (Fig. 112).

(24) Connect input speed sensor connector (Fig. 112).

REMOVAL AND INSTALLATION (Continued)

(25) Install gearshift cable to bracket and connect to the manual valve lever.
(26) Install battery tray (Fig. 111).
(27) Install battery and hold-down clamp (Fig. 110).
(28) Install air cleaner assembly (Fig. 109).
(29) Connect battery cables.
(30) Fill transaxle with fluid. Refer to SERVICE PROCEDURES for proper procedure.

OIL PUMP SEAL

REMOVAL

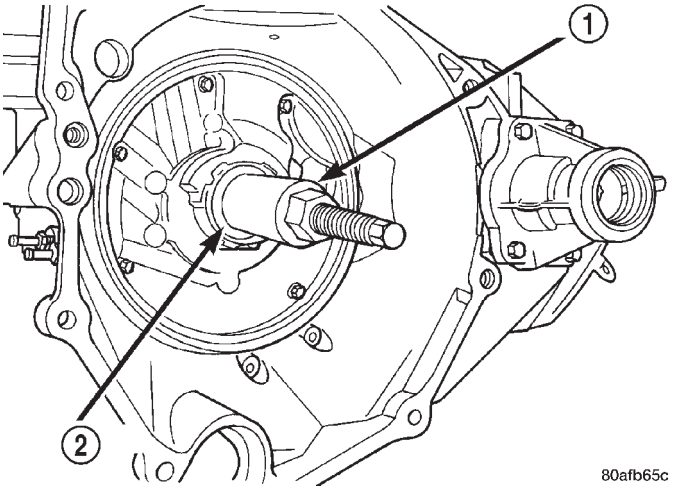

Fig. 120 Remove Oil Pump Seal

1 – TOOL C-3981–B
2 – OIL PUMP SEAL

INSTALLATION

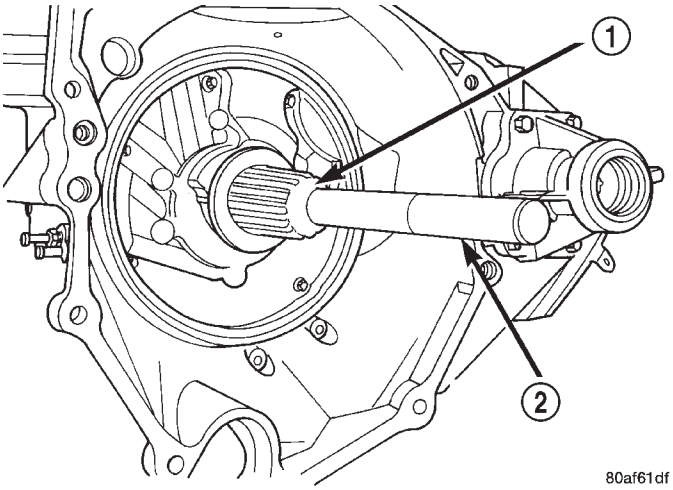

Fig. 121 Install Oil Pump Seal

1 – TOOL C-4193
2 – HANDLE TOOL C-4171

DISASSEMBLY AND ASSEMBLY

VALVE BODY

DISASSEMBLY

(1) Remove manual shaft seal (Fig. 122).

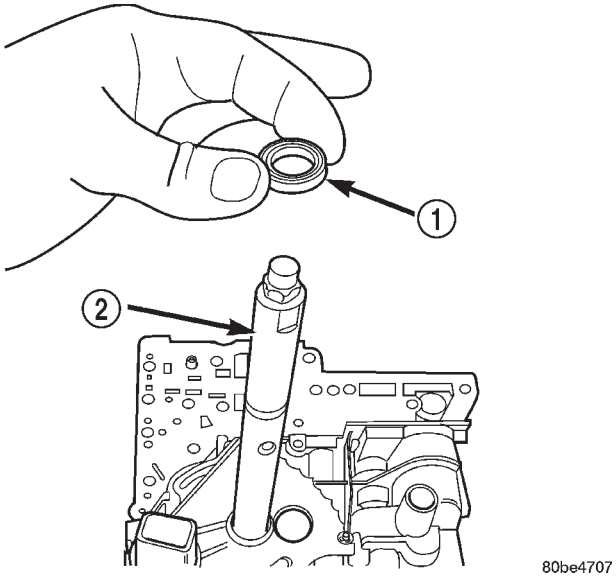

Fig. 122 Manual Shaft Seal

1 – SEAL
2 – MANUAL SHAFT

(2) Remove Transmission Range Sensor retaining screw (Fig. 123).

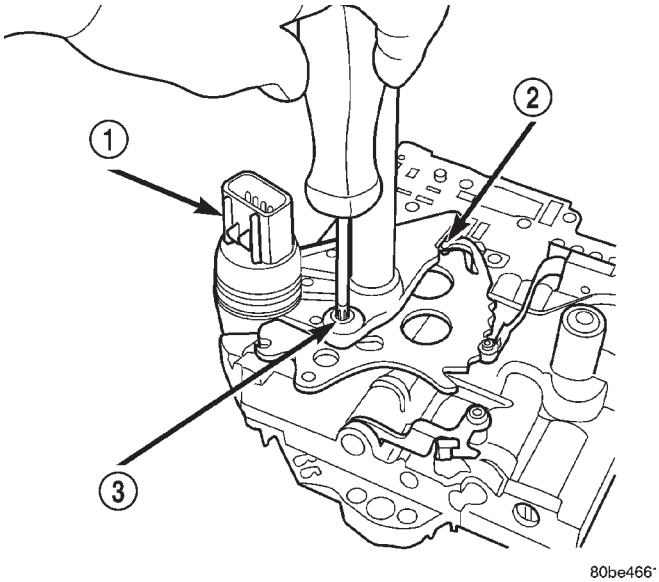

Fig. 123 Remove Transmission Range Sensor Retaining Screw

1 – TRANSMISSION RANGE SENSOR
2 – MANUAL VALVE CONTROL PIN
3 – RETAINING SCREW

DISASSEMBLY AND ASSEMBLY (Continued)

(3) Remove Manual Shaft/Rooster Comb and Transmission Range Sensor (Fig. 124).

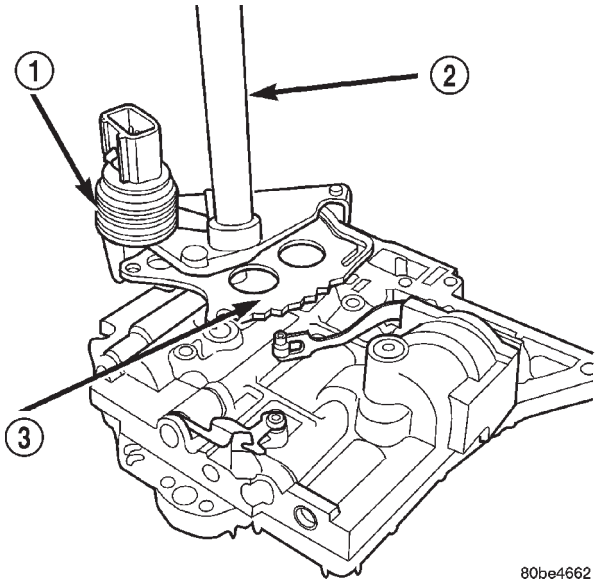

Fig. 124 Manual Shaft/Rooster Comb and Transmission Range Sensor

1 – TRANSMISSION RANGE SENSOR
2 – MANUAL SHAFT
3 – ROOSTER COMB

(4) Remove 2/4 Accumulator Retaining Plate (Fig. 125).

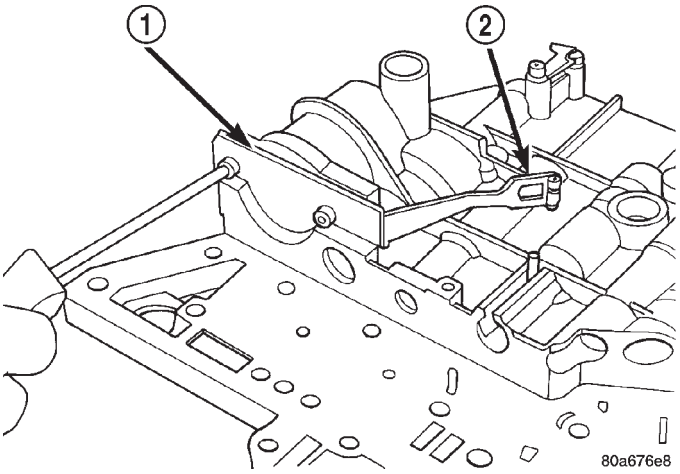

Fig. 125 2/4 Accumulator Retaining Plate

1 – 2–4 ACCUMULATOR RETAINING PLATE
2 – DETENT SPRING

(5) Remove 2/4 Accumulator components as shown in (Fig. 126).

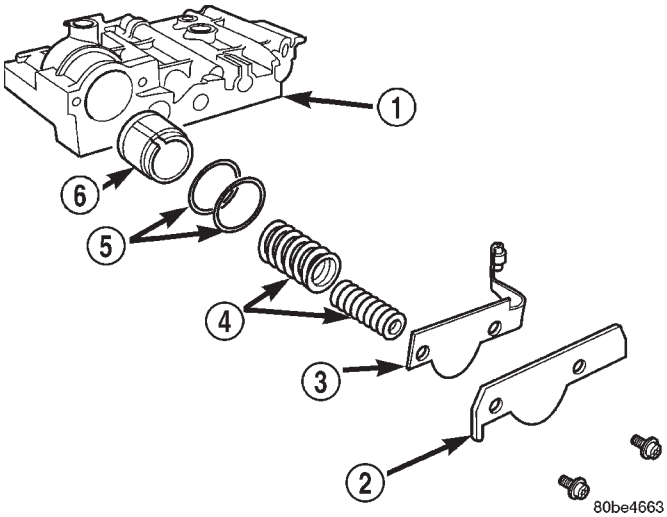

Fig. 126 2/4 Accumulator Assembly

1 – VALVE BODY
2 – RETAINER PLATE
3 – DETENT SPRING
4 – SPRINGS
5 – SEALS
6 – PISTON

(6) Remove Valve Body to Transfer Plate screws (Fig. 127).

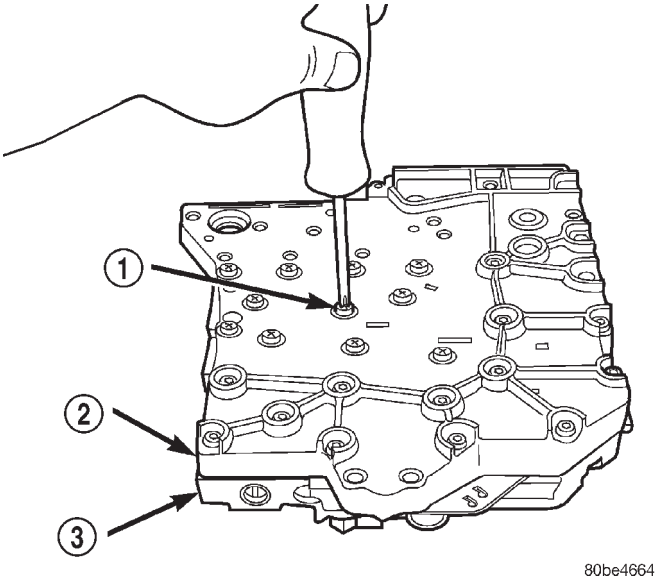

Fig. 127 Remove Valve Body to Transfer Plate Screws

1 – SCREW (24)
2 – TRANSFER PLATE
3 – VALVE BODY

DISASSEMBLY AND ASSEMBLY (Continued)

(7) Invert assembly and remove Transfer Plate. Beware of loose check balls.

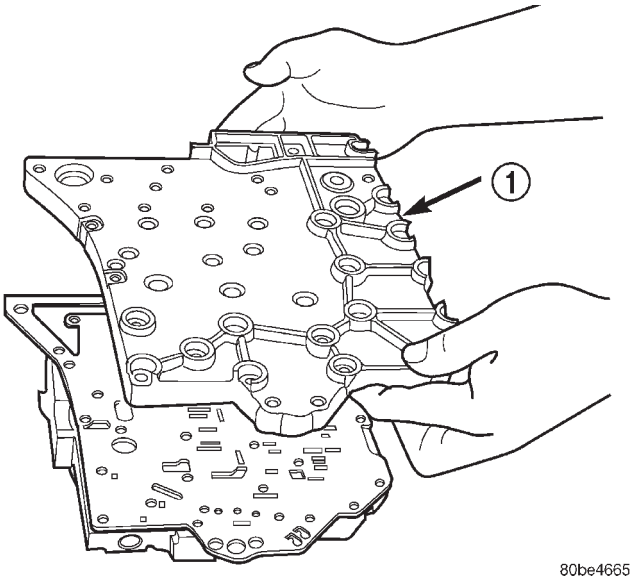

Fig. 128 Remove Transfer Plate

1 – TRANSFER PLATE

(8) Remove oil screen (Fig. 129).

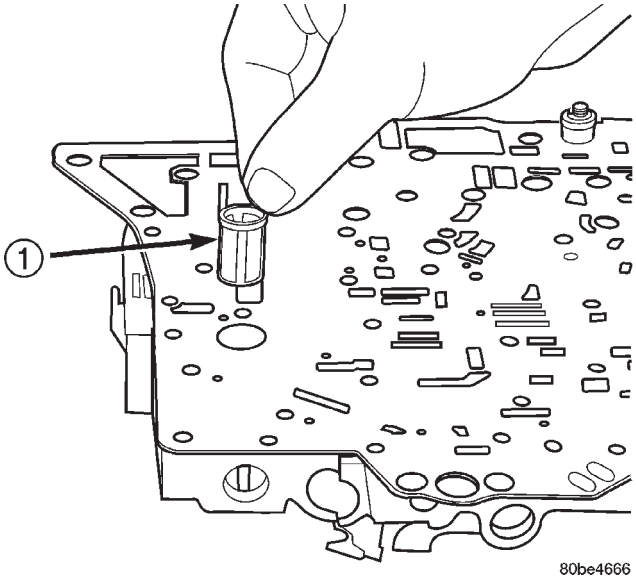

Fig. 129 Remove Oil Screen

1 – OIL SCREEN

(9) Remove the overdrive clutch (#5) check valve (Fig. 130)

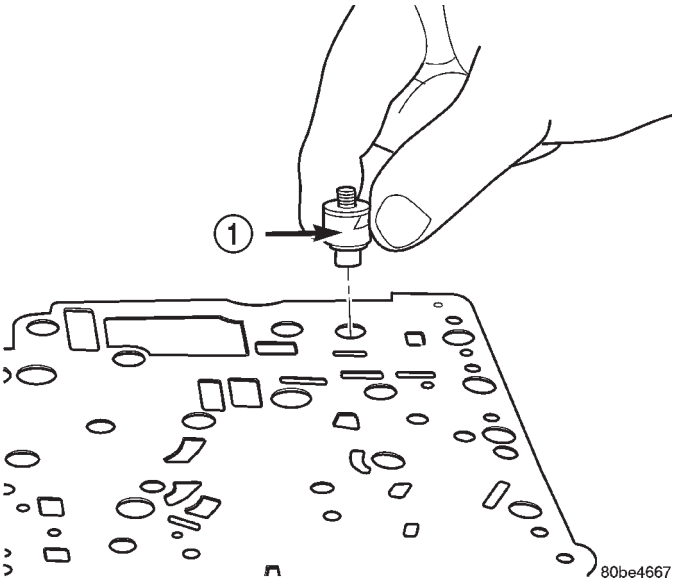

Fig. 130 Remove Overdrive Clutch (#5) Check Valve

1 – OVERDRIVE CLUTCH (#5) CHECK VALVE

(10) Remove separator plate (Fig. 131).

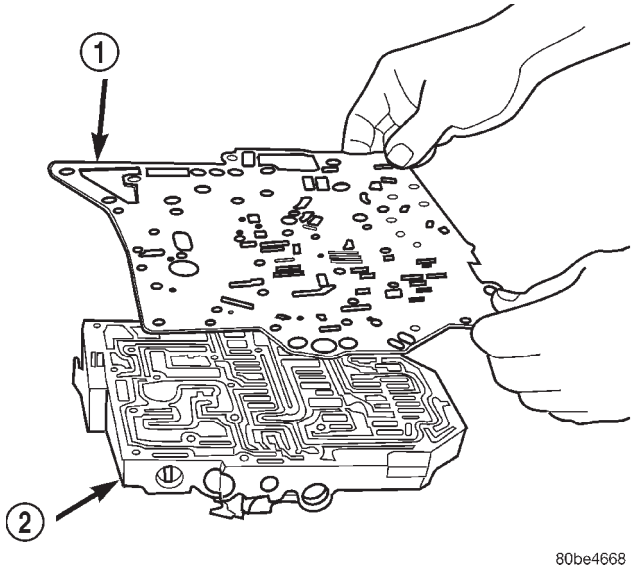

Fig. 131 Remove Separator Plate

1 – SEPARATOR PLATE

2 – VALVE BODY

DISASSEMBLY AND ASSEMBLY (Continued)

(11) Remove thermal valve (Fig. 132).

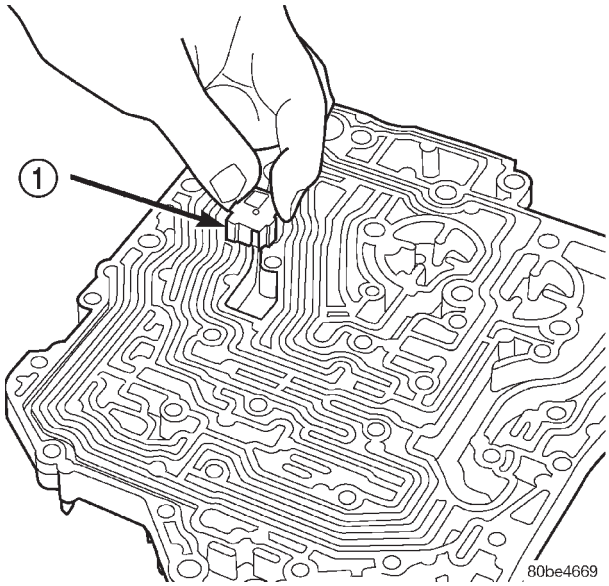

Fig. 132 Remove Thermal Valve

1 – THERMAL VALVE

NOTE: Tag all valve/spring assemblies for reassembly identification.

(13) Remove dual retainer plate using Tool 6301 (Fig. 134).

(14) Remove regulator valve spring retainer (Fig. 135).

(15) Remove the vent reservoir check valve retainer (Fig. 136).

(16) Remove vent reservoir check valve and spring (Fig. 137).

(12) Remove check balls (Fig. 133).

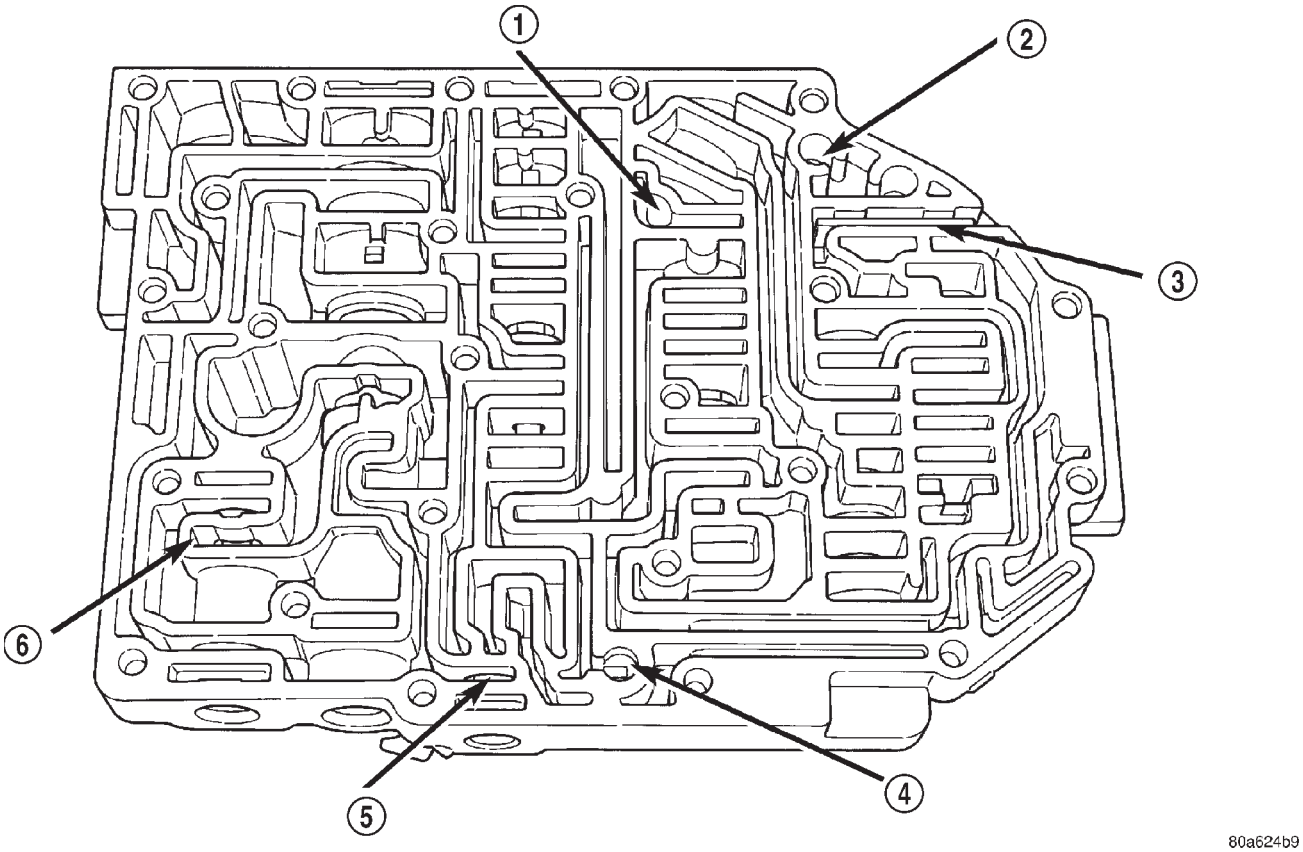

Fig. 133 Ball Check Location

1 – (#4) BALL CHECK LOCATION
2 – (#2) BALL CHECK LOCATION
3 – RETAINER
4 – (#3) BALL CHECK LOCATION
5 – LOW/REVERSE SWITCH VALVE
6 – T/C LIMIT VALVE

DISASSEMBLY AND ASSEMBLY (Continued)

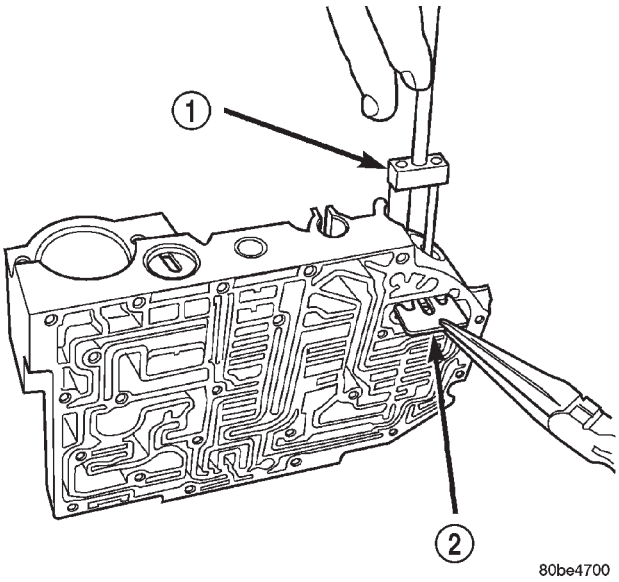

Fig. 134 Remove Dual Retainer Plate using Tool 6301

1 – TOOL 6301
2 – RETAINER

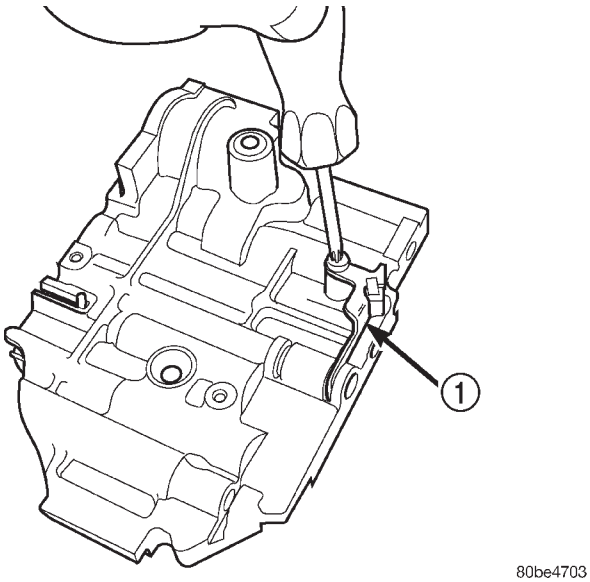

Fig. 136 Remove Vent Reservoir Check Valve Retainer

1 – RETAINER

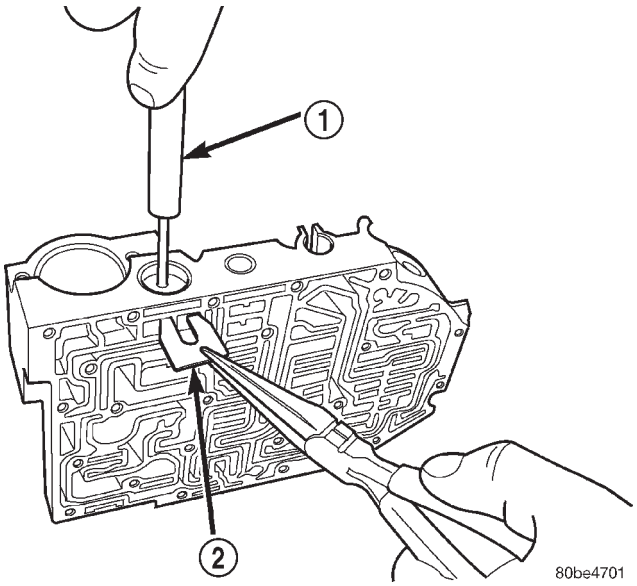

Fig. 135 Remove Regulator Valve Spring Retainer using Tool 6302

1 – TOOL 6302
2 – RETAINER

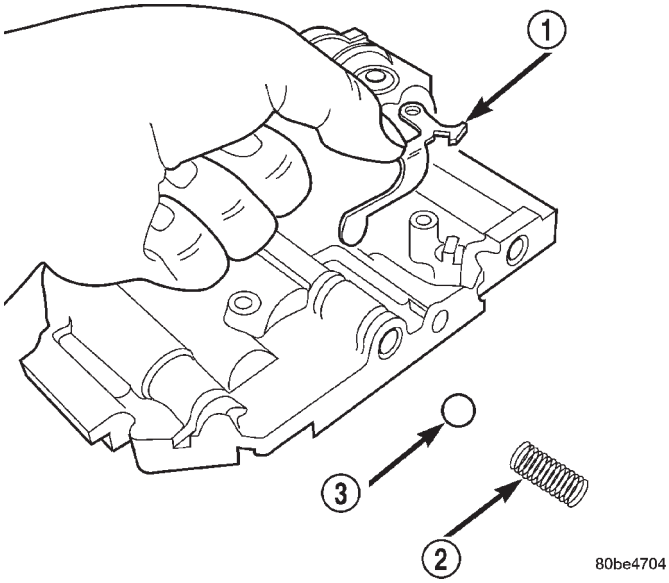

Fig. 137 Vent Reservoir Check Valve and Spring

1 – RETAINER
2 – SPRING
3 – BALL

DISASSEMBLY AND ASSEMBLY (Continued)

(17) Remove remaining retainers as shown in (Fig. 138).

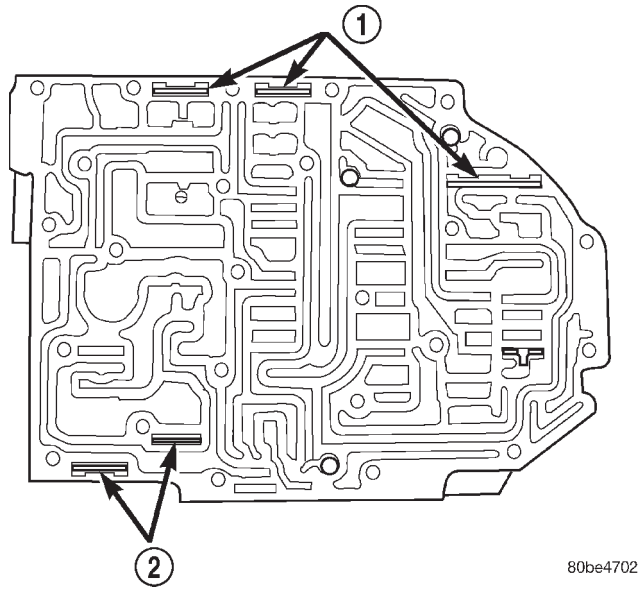

Fig. 138 Valve Retainer Location

1 – RETAINER
2 – RETAINER

(18) Remove valves and springs as shown in (Fig. 139).

NOTE: Refer to Valve Body Cleaning and Inspection for cleaning procedures.

ASSEMBLY

(1) Install valves and springs as shown in (Fig. 139).
(2) Install regulator valve spring retainer (Fig. 140).
(3) Install dual retainer plate using Tool 6301 (Fig. 141).
(4) Install vent reservoir check valve and spring (Fig. 142).
(5) Install the vent reservoir check valve retainer (Fig. 143).

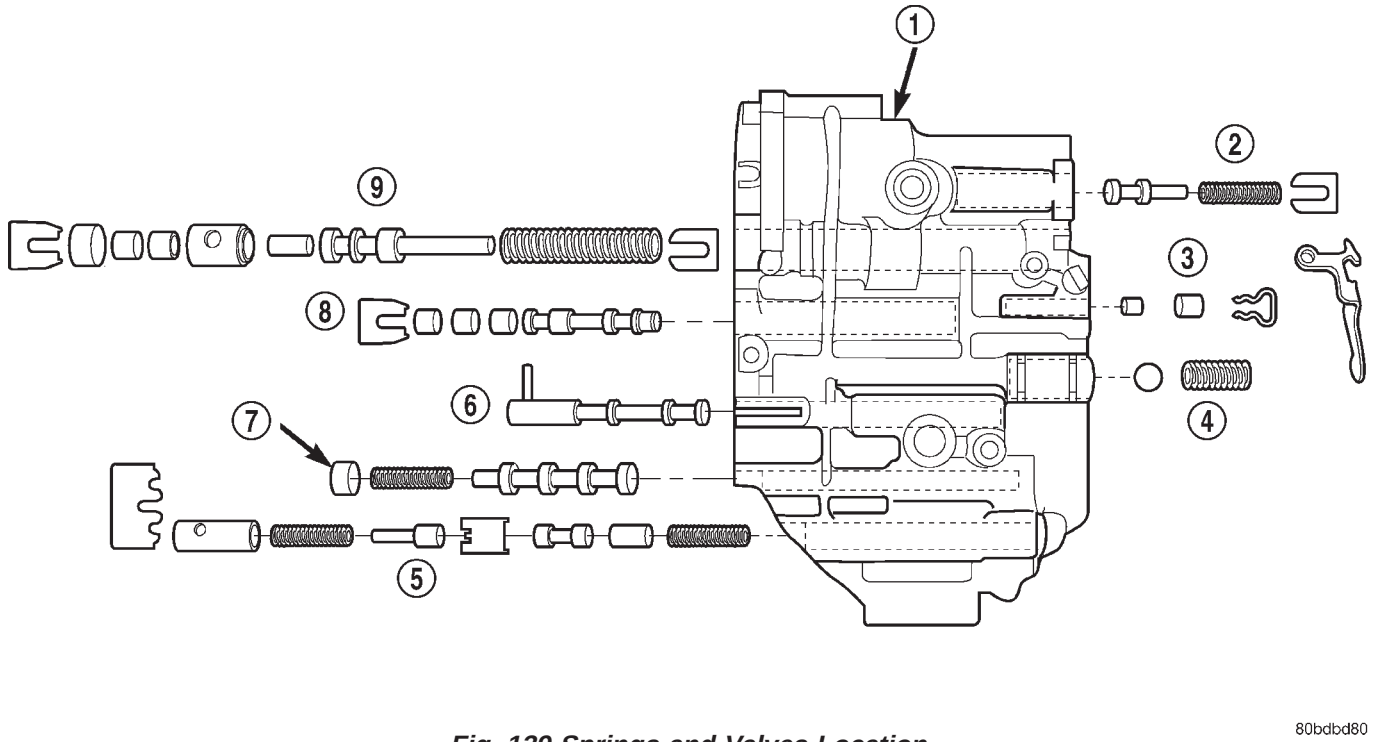

Fig. 139 Springs and Valves Location

1 – VALVE BODY
2 – T/C REGULATOR VALVE
3 – L/R SWITCH VALVE
4 – VENT RESERVOIR CHECK VALVE
5 – CONVERTER CLUTCH CONTROL VALVE
6 – MANUAL VALVE
7 – CONVERTER CLUTCH SWITCH VALVE
8 – SOLENOID SWITCH VALVE
9 – REGULATOR VALVE

DISASSEMBLY AND ASSEMBLY (Continued)

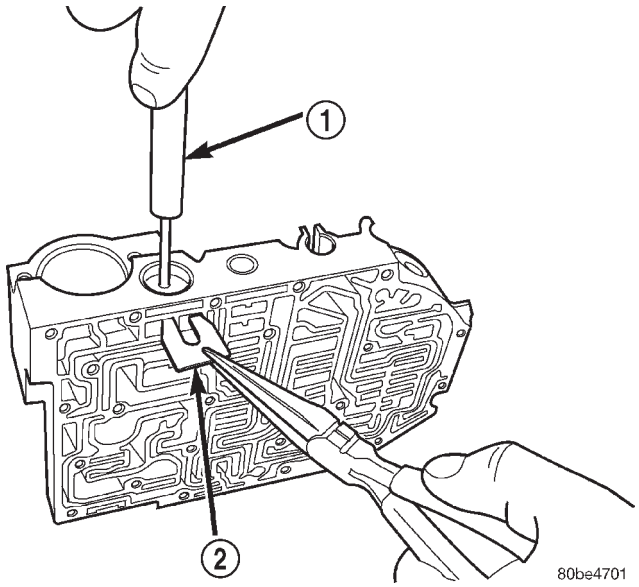

Fig. 140 Install Regulator Valve Spring Retainer using Tool 6302

1 – TOOL 6302
2 – RETAINER

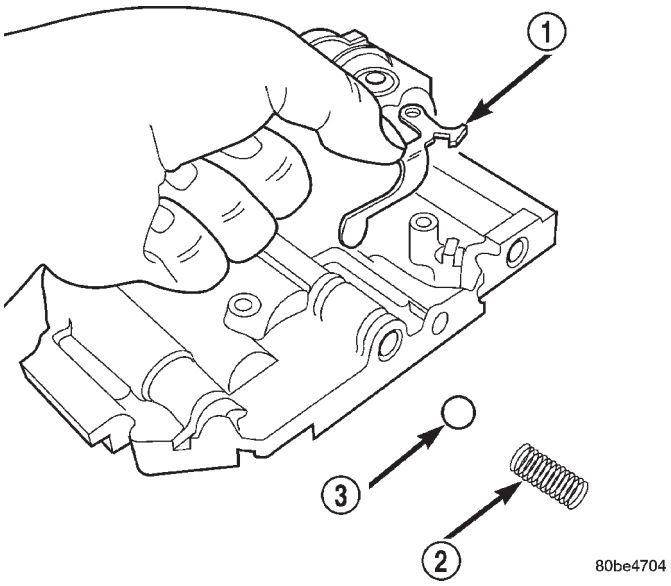

Fig. 142 Vent Reservoir Check Valve and Spring

1 – RETAINER
2 – SPRING
3 – BALL

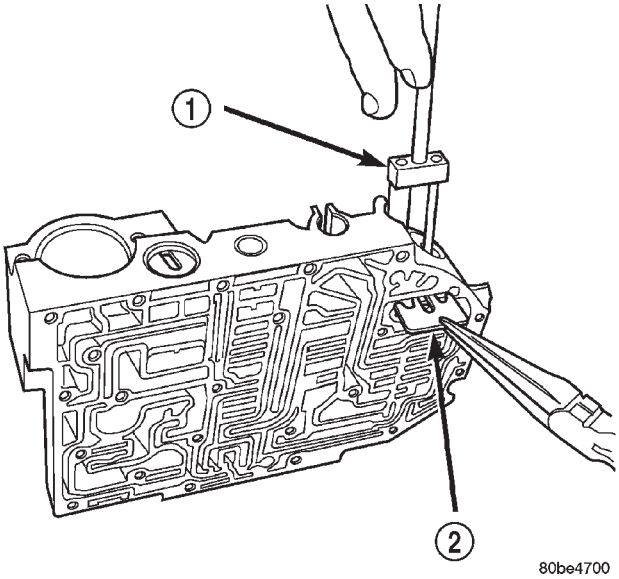

Fig. 141 Install Dual Retainer Plate using Tool 6301

1 – TOOL 6301
2 – RETAINER

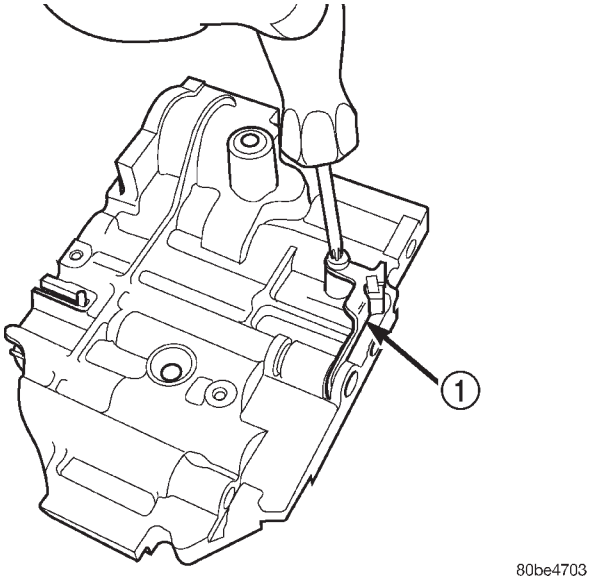

Fig. 143 Install Vent Reservoir Check Valve Retainer

1 – RETAINER

(6) Verify that all retainers are installed as shown in (Fig. 144). Retainers should be flush or below valve body surface.

DISASSEMBLY AND ASSEMBLY (Continued)

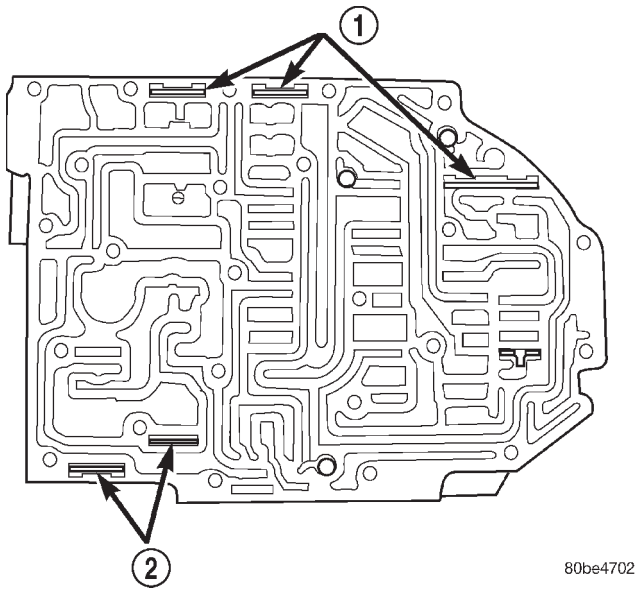

Fig. 144 Valve Retainer Location

1 – RETAINER
2 – RETAINER

(7) Install check balls into position as shown in (Fig. 145). If necessary, secure them with petrolatum or transmission assembly gel for assembly ease.

(8) Install thermal valve into transfer plate (Fig. 146).

(9) Install separator plate to valve body (Fig. 147).

(10) Install the overdrive clutch (#5) check valve to separator plate (Fig. 148)

(11) Install oil screen to separator plate (Fig. 149).

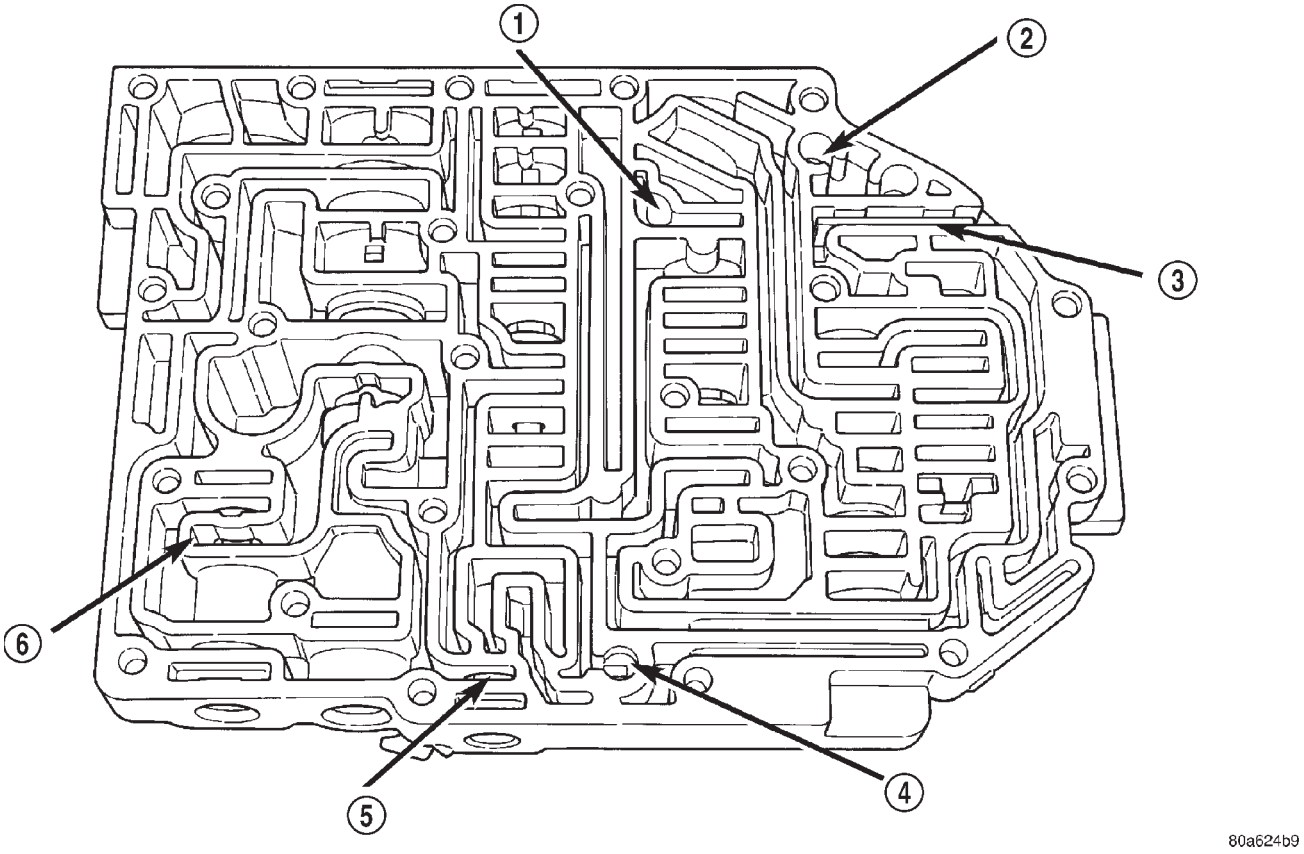

Fig. 145 Ball Check Location

1 – (#4) BALL CHECK LOCATION
2 – (#2) BALL CHECK LOCATION
3 – RETAINER
4 – (#3) BALL CHECK LOCATION
5 – LOW/REVERSE SWITCH VALVE
6 – T/C LIMIT VALVE

DISASSEMBLY AND ASSEMBLY (Continued)

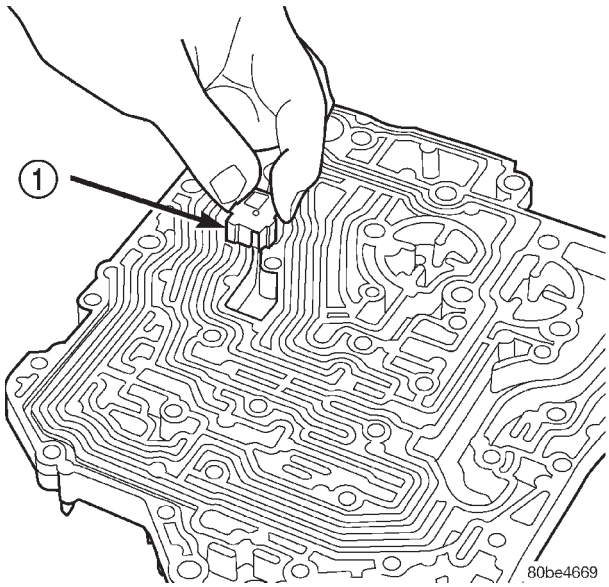

Fig. 146 Install Thermal Valve

1 – THERMAL VALVE

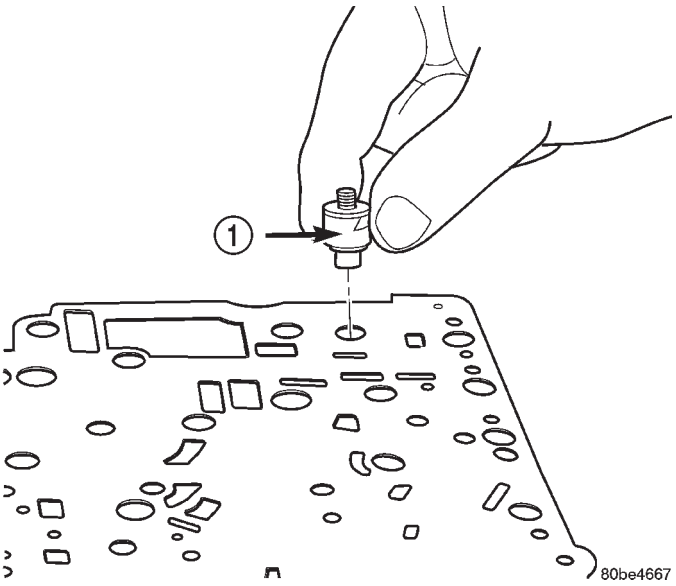

Fig. 148 Install Overdrive Clutch (#5) Check Valve

1 – OVERDRIVE CLUTCH (#5) CHECK VALVE

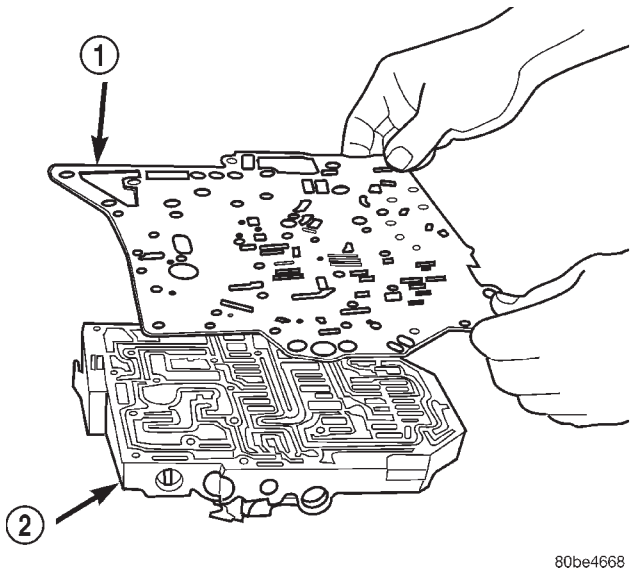

Fig. 147 Install Separator Plate

1 – SEPARATOR PLATE
2 – VALVE BODY

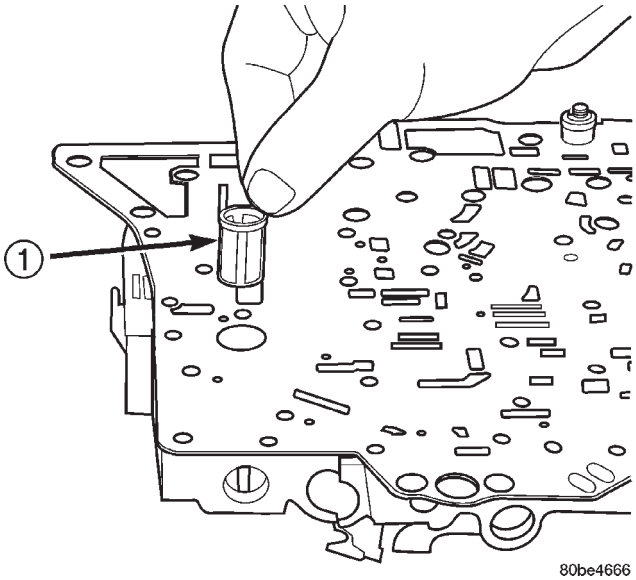

Fig. 149 Install Oil Screen

1 – OIL SCREEN

(12) Install transfer plate to valve body and separator plate. Make sure oil screen and #5 check valve do not bind (Fig. 150).

(13) Install twenty-four transfer plate to valve body screws (Fig. 151) and torque to 5 N·m (45 in. lbs.).

(14) Install 2/4 Accumulator components as shown in (Fig. 152).

(15) Torque 2/4 Accumulator retainer to 5 N·m (45 in. lbs.) (Fig. 153).

DISASSEMBLY AND ASSEMBLY (Continued)

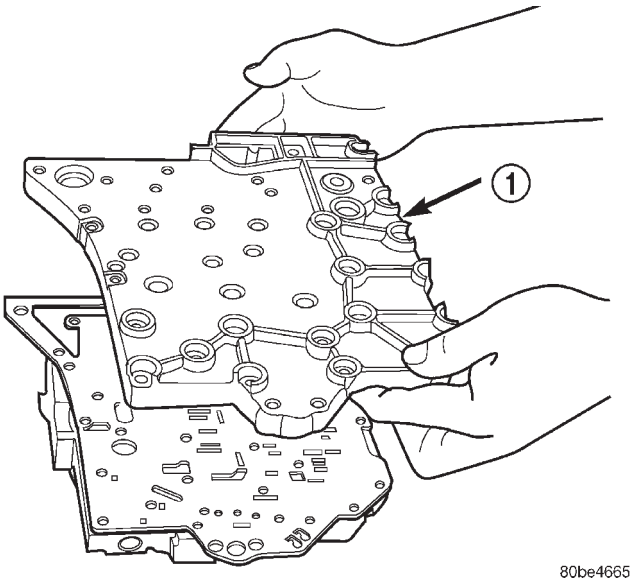

Fig. 150 Install Transfer Plate

1 – TRANSFER PLATE

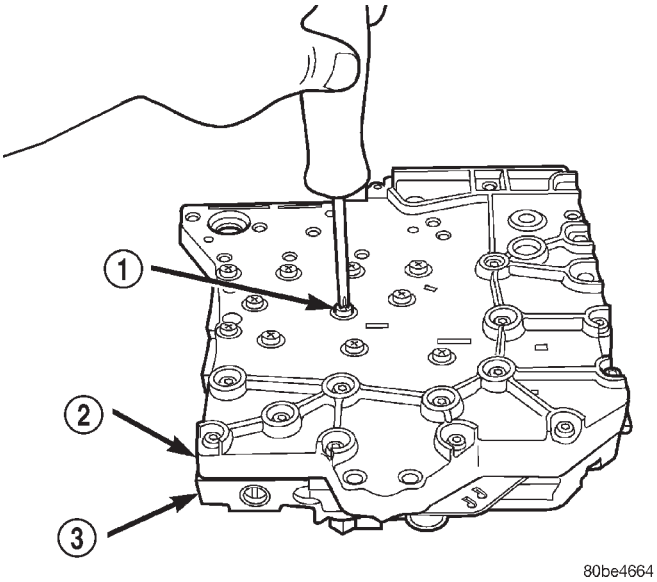

Fig. 151 Install Valve Body to Transfer Plate Screws

1 – SCREW (24)
2 – TRANSFER PLATE
3 – VALVE BODY

(16) Install Manual Shaft/Rooster Comb and Transmission Range Sensor (Fig. 154).

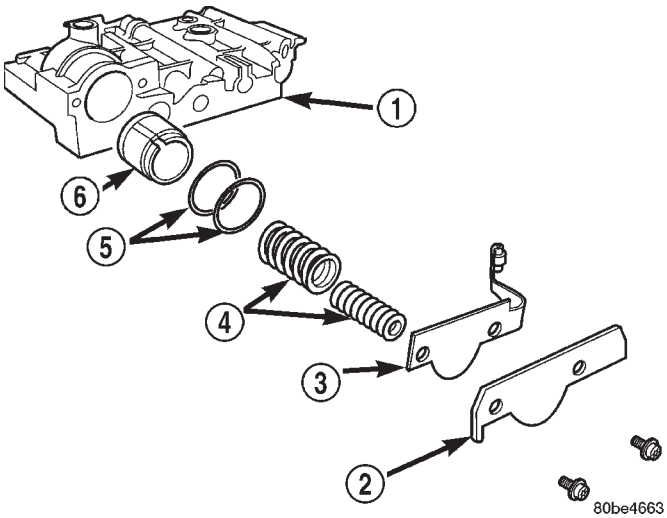

Fig. 152 2/4 Accumulator Assembly

1 – VALVE BODY
2 – RETAINER PLATE
3 – DETENT SPRING
4 – SPRINGS
5 – SEALS
6 – PISTON

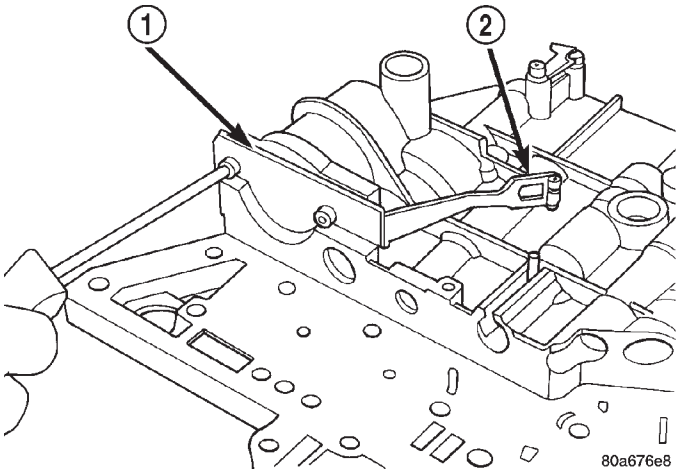

Fig. 153 2/4 Accumulator Retaining Plate

1 – 2–4 ACCUMULATOR RETAINING PLATE
2 – DETENT SPRING

(17) Make sure Manual Valve control pin is contained within the rooster comb slot (Fig. 155). Install Transmission Range Sensor retaining screw (Fig. 155) and torque to 5 N·m (45 in. lbs.).

DISASSEMBLY AND ASSEMBLY (Continued)

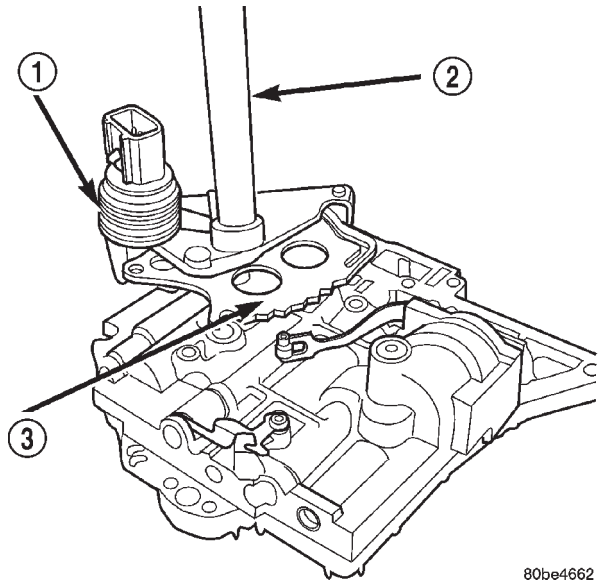

Fig. 154 Install Manual Shaft/Rooster Comb and Transmission Range Sensor

1 – TRANSMISSION RANGE SENSOR
2 – MANUAL SHAFT
3 – ROOSTER COMB

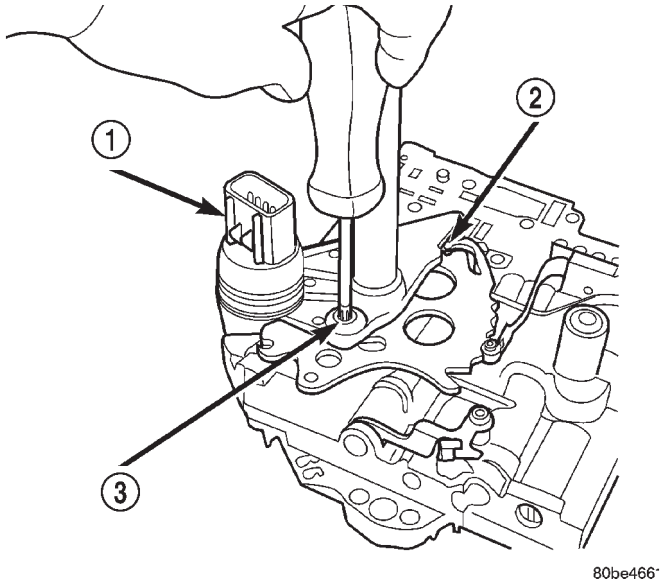

Fig. 155 Install Transmission Range Sensor Retaining Screw

1 – TRANSMISSION RANGE SENSOR
2 – MANUAL VALVE CONTROL PIN
3 – RETAINING SCREW

(18) Install manual shaft seal (Fig. 156).

TRANSAXLE—DISASSEMBLY

NOTE: Tag all clutch pack assemblies, as they are removed, for reassembly identification.

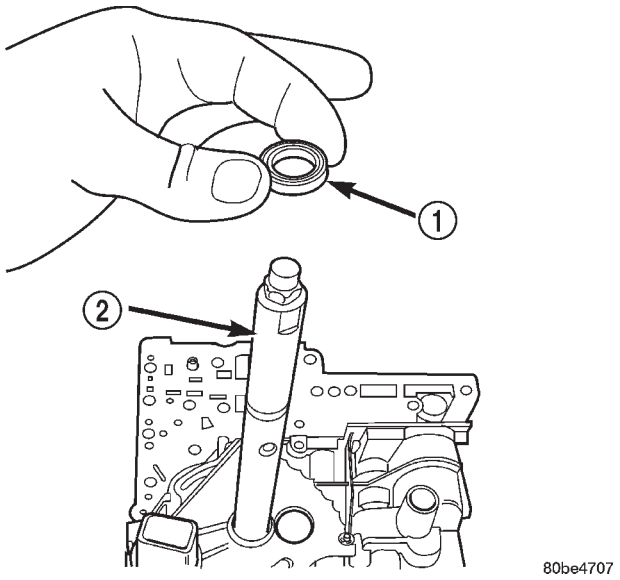

Fig. 156 Manual Shaft Seal

1 – SEAL
2 – MANUAL SHAFT

CAUTION: Do not intermix clutch discs or plates as the unit might then fail.

(1) Remove input and output speed sensors.

(2) Remove the three solenoid/pressure switch assembly-to-transaxle case bolts (Fig. 157).

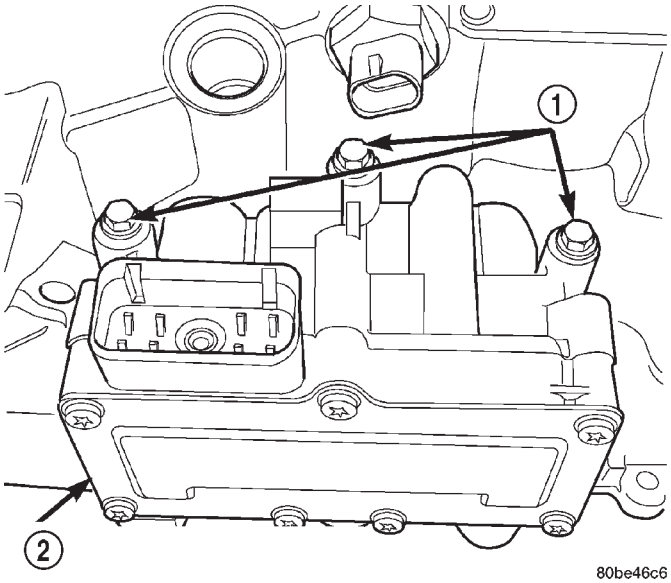

Fig. 157 Attaching Bolts

1 – BOLTS
2 – SOLENOID AND PRESSURE SWITCH ASSEMBLY

(3) Remove solenoid/pressure switch assembly and gasket (Fig. 158).

DISASSEMBLY AND ASSEMBLY (Continued)

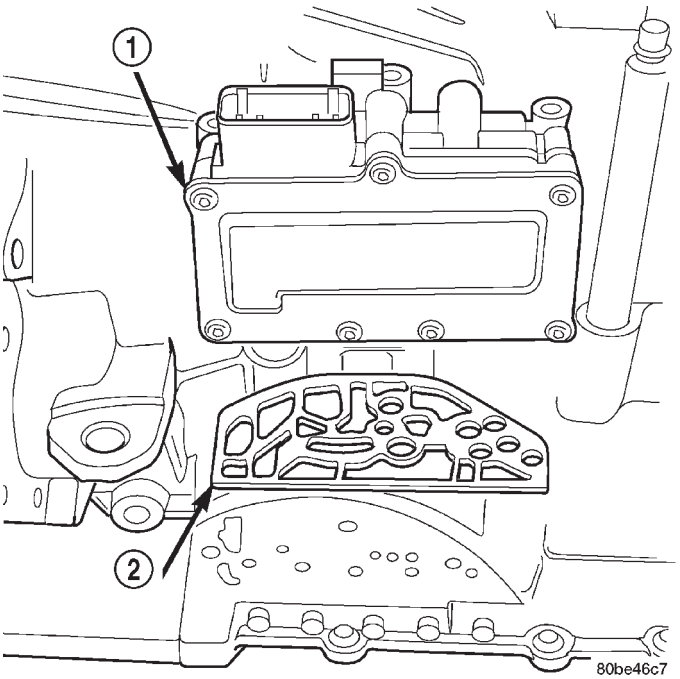

Fig. 158 Solenoid/Pressure Switch Assembly and Gasket

1 – SOLENOID/PRESSURE SWITCH ASSEMBLY
2 – GASKET

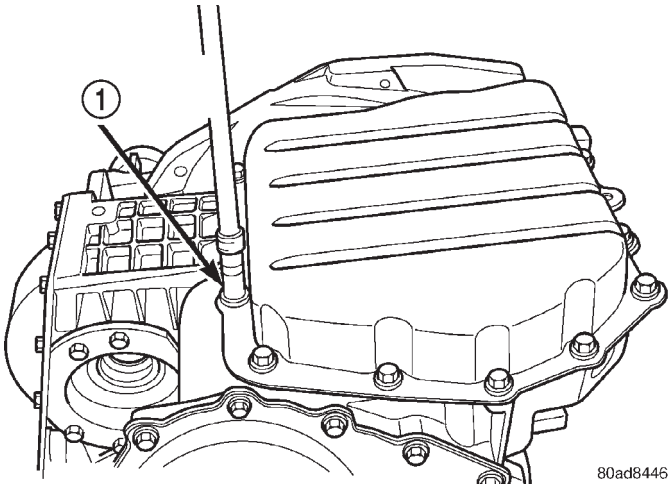

Fig. 159 Remove Oil Pan Bolts

1 – OIL PAN BOLTS (USE RTV UNDER BOLT HEADS)

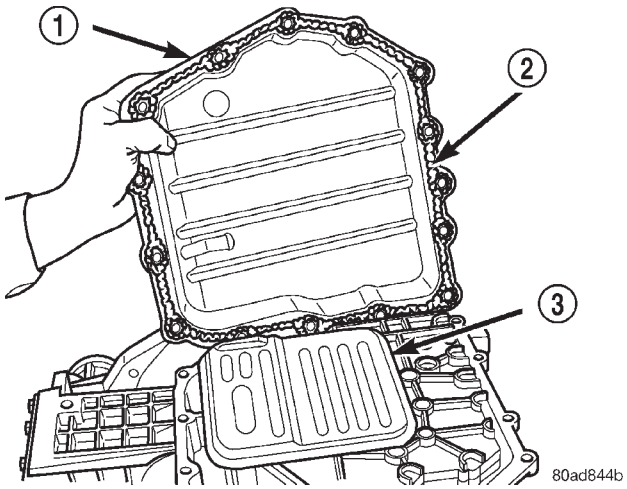

Fig. 160 Remove Oil Pan

1 – OIL PAN
2 – 1/8 INCH BEAD OF RTV SEALANT
3 – OIL FILTER

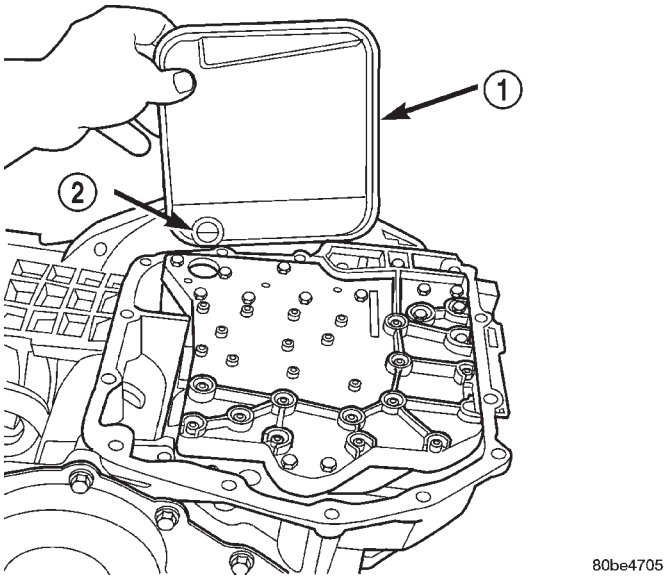

Fig. 161 Remove Oil Filter

1 – OIL FILTER
2 – O-RING

DISASSEMBLY AND ASSEMBLY (Continued)

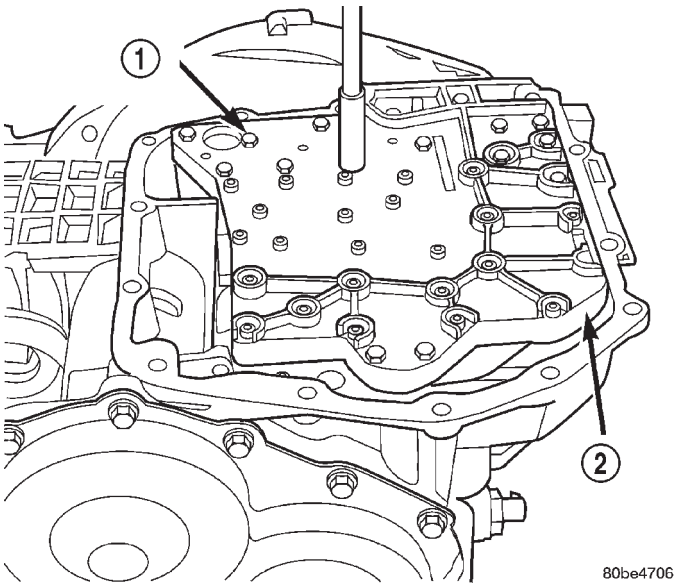

Fig. 162 Remove Valve Body Attaching Bolts

1 – VALVE BODY ATTACHING BOLTS (18)
2 – VALVE BODY

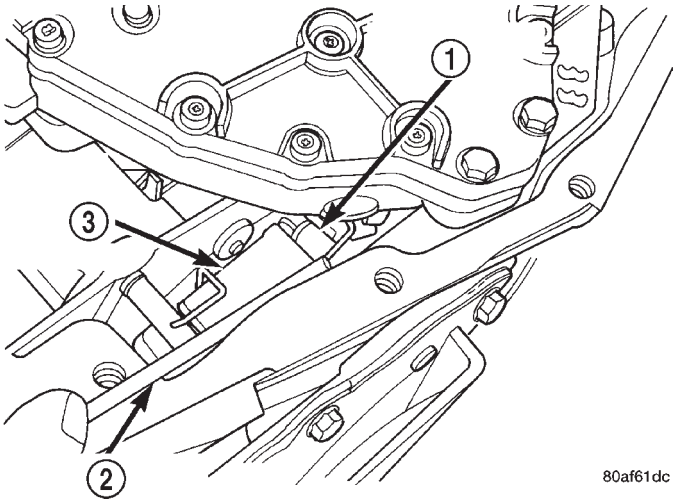

Fig. 163 Push Park Rod Rollers from Guide Bracket

1 – PARK SPRAG ROLLERS
2 – SCREWDRIVER
3 – PARK SPRAG GUIDE BRACKET

NOTE: To ease removal of the valve body, turn the manual valve fully clockwise.

CAUTION: Do not handle the valve body from the manual valve. Damage could result.

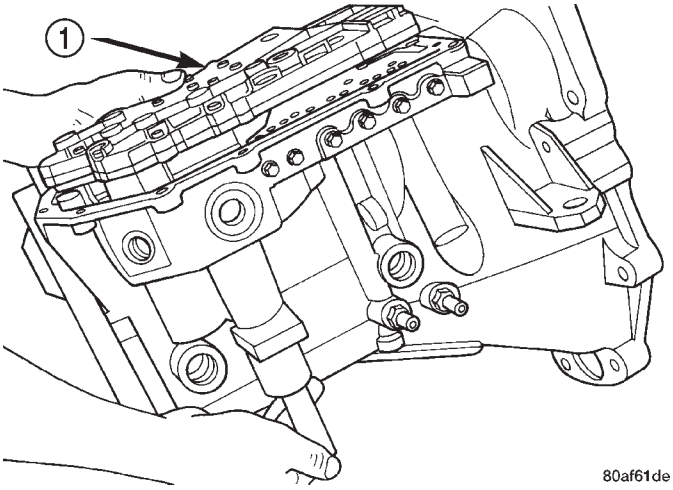

Fig. 164 Remove Valve Body

1 – VALVE BODY

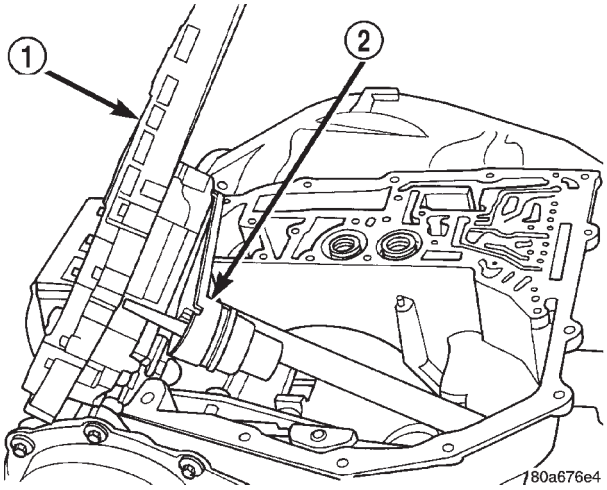

Fig. 165 Valve Body Removed

1 – VALVE BODY
2 – TRANSMISSION RANGE SENSOR

DISASSEMBLY AND ASSEMBLY (Continued)

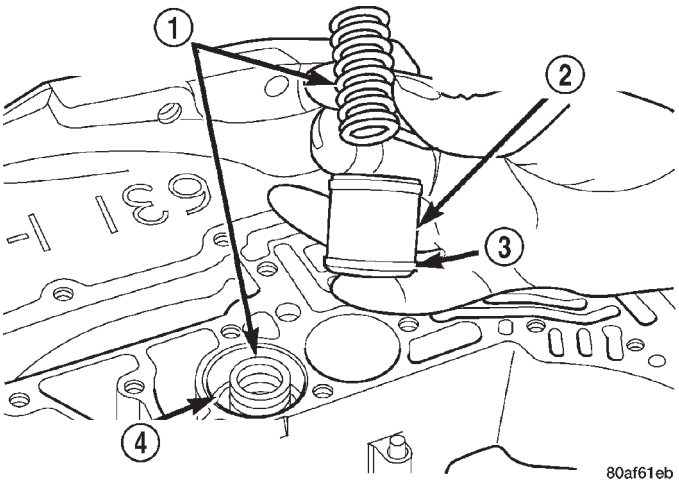

Fig. 166 Remove Underdrive and Overdrive Accumulators

1 – RETURN SPRING
2 – UNDERDRIVE CLUTCH ACCUMULATOR
3 – SEAL RING (2)
4 – OVERDRIVE CLUTCH ACCUMULATOR

NOTE: Dependent on engine application, some accumulators will have two springs and others will have one spring. The springs are color coded according to application and year. When disassembling, mark accumulator spring location to ease assembly.

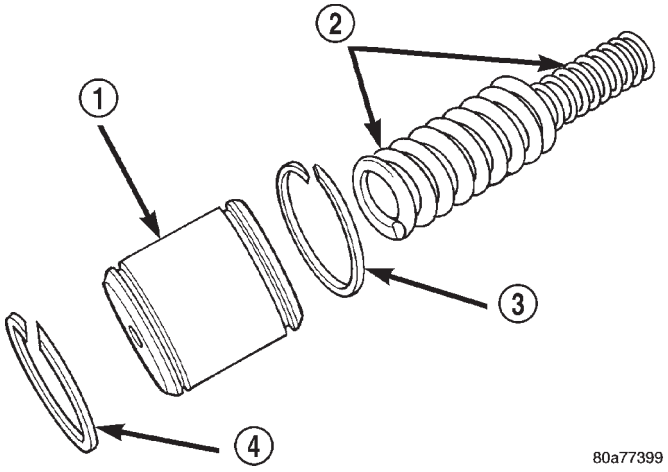

Fig. 167 Accumulator (Underdrive)

1 – ACCUMULATOR PISTON (UNDERDRIVE)
2 – RETURN SPRINGS
3 – SEAL RING
4 – SEAL RING

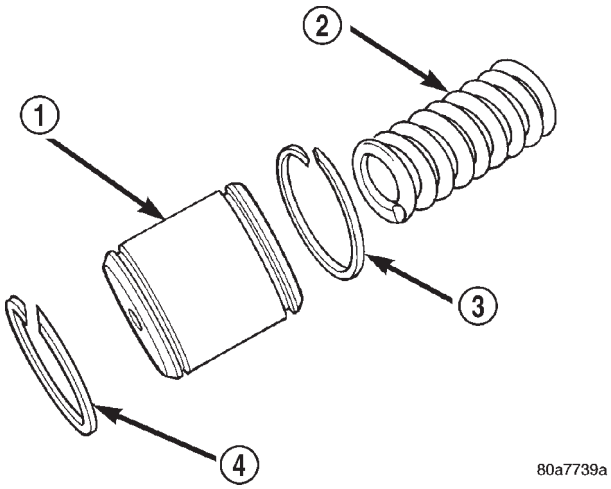

Fig. 168 Accumulator (Overdrive)

1 – ACCUMULATOR PISTON (OVERDRIVE)
2 – RETURN SPRING
3 – SEAL RING
4 – SEAL RING

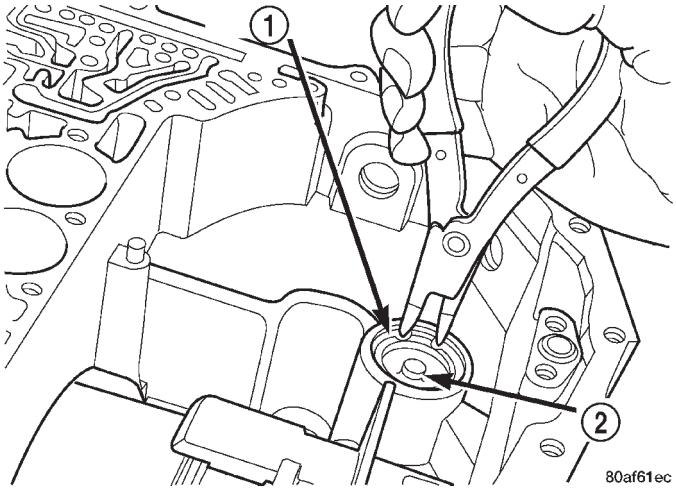

Fig. 169 Remove Low/Reverse Accumulator Snap Ring

1 – SNAP RING
2 – PLUG

DISASSEMBLY AND ASSEMBLY (Continued)

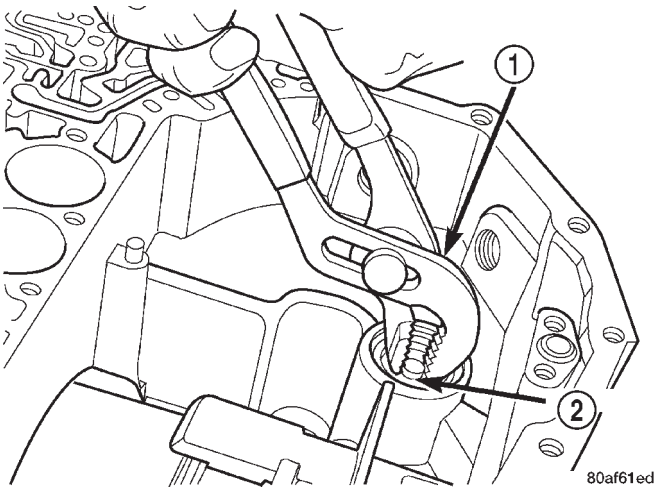

Fig. 170 Remove Low/Reverse Accumulator Plug (Cover)

1 – ADJUSTABLE PLIERS
2 – PLUG

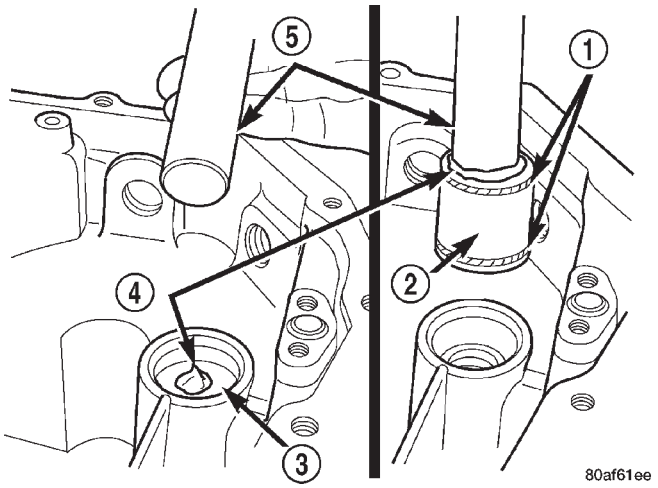

Fig. 171 Remove Low/Reverse Accumulator Piston

1 – SEAL RINGS
2 – PISTON
3 – PISTON
4 – PETROLATUM
5 – SUITABLE TOOL

Set up End Play Set 8266 and Dial Indicator Set C3339 as shown in (Fig. 173). Measure the input shaft end play with the transaxle in the vertical position. This will ensure that the measurement will be accurate.

Measuring input shaft end play before disassembly will usually indicate when a #4 thrust plate change is required. The #4 thrust plate is located behind the overdrive clutch hub.

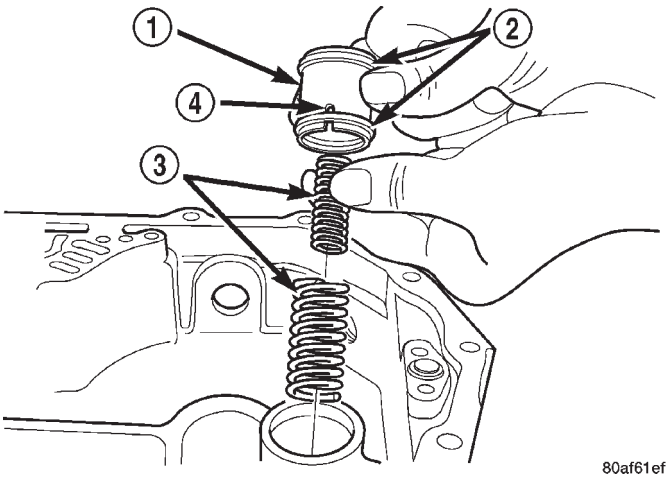

Fig. 172 Remove Low/Reverse Accumulator

1 – ACCUMULATOR PISTON
2 – SEAL RINGS
3 – RETURN SPRINGS
4 – (NOTE NOTCH)

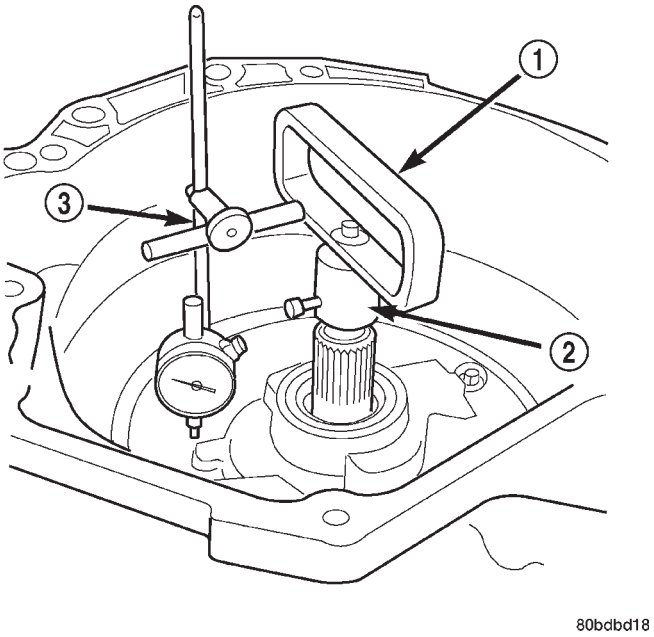

Fig. 173 Measure Input Shaft End Play Using End Play Set 8266

1 – TOOL 8266–8
2 – TOOL 8266–2
3 – TOOL C-3339

Move input shaft in and out to obtain end play reading. End play specifications are 0.13 to 0.64 mm (0.005 to 0.025 inch).

Record indicator reading for reference when reassembling the transaxle.

DISASSEMBLY AND ASSEMBLY (Continued)

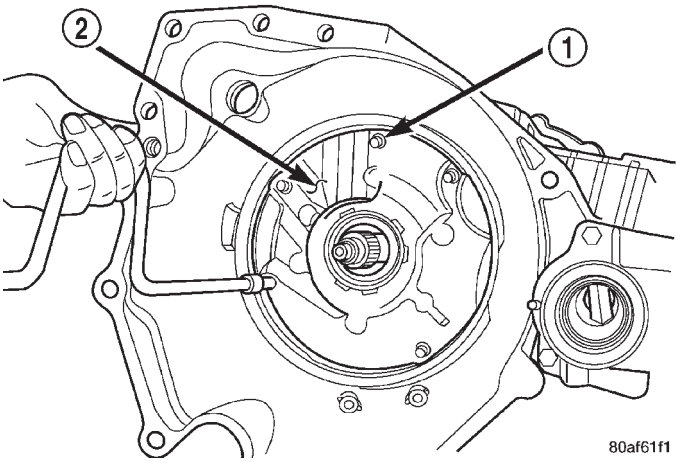

Fig. 174 Remove Pump Attaching Bolts

1 – PUMP ATTACHING BOLTS
2 – PUMP HOUSING

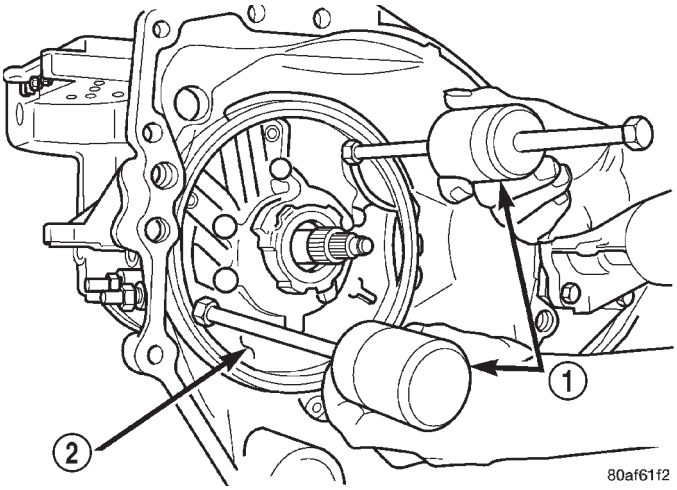

Fig. 175 Install Tool C-3752

1 – PULLERS TOOL C-3752
2 – PUMP

CAUTION: Be sure input speed sensor is removed before removing oil pump.

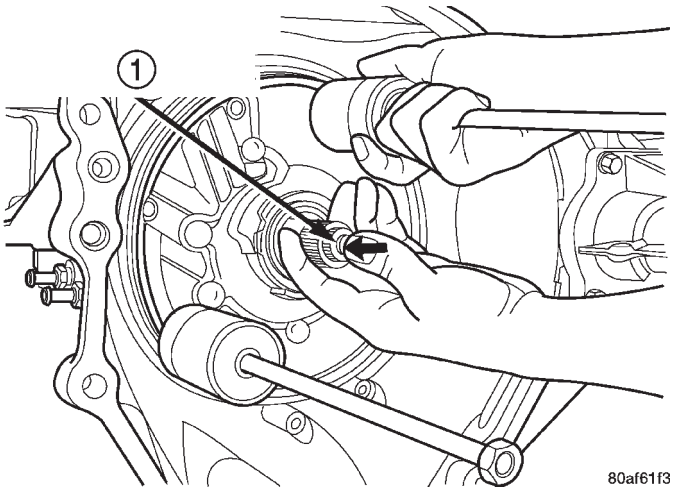

Fig. 176 Remove Oil Pump

1 – “PUSH IN” ON INPUT SHAFT WHILE REMOVING PUMP

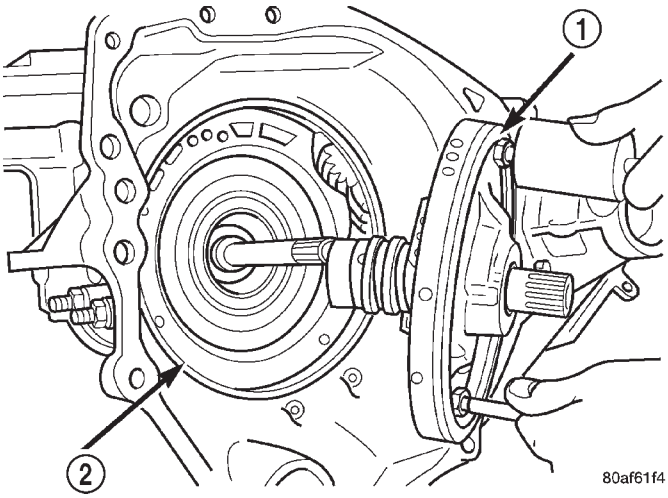

Fig. 177 Oil Pump Removed

1 – OIL PUMP
2 – GASKET

DISASSEMBLY AND ASSEMBLY (Continued)

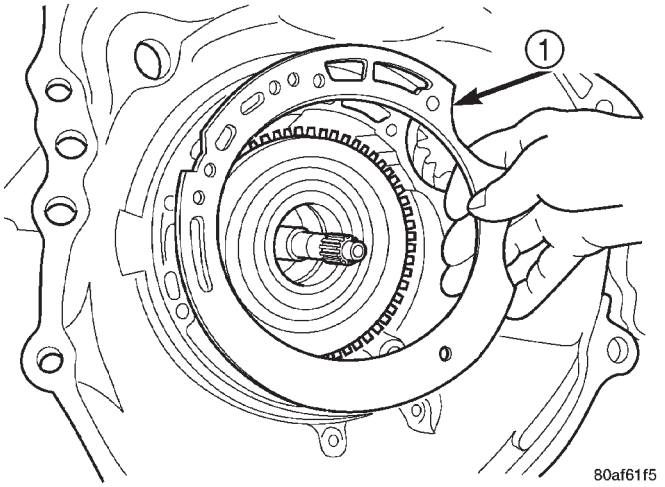

Fig. 178 Remove Oil Pump Gasket

1 – PUMP GASKET

OIL PUMP INSPECTION

When disassembling the transaxle it is necessary to inspect the oil pump for wear and damage.

(1) Remove the reaction shaft support bolts.

(2) Remove reaction shaft support from pump housing (Fig. 179).

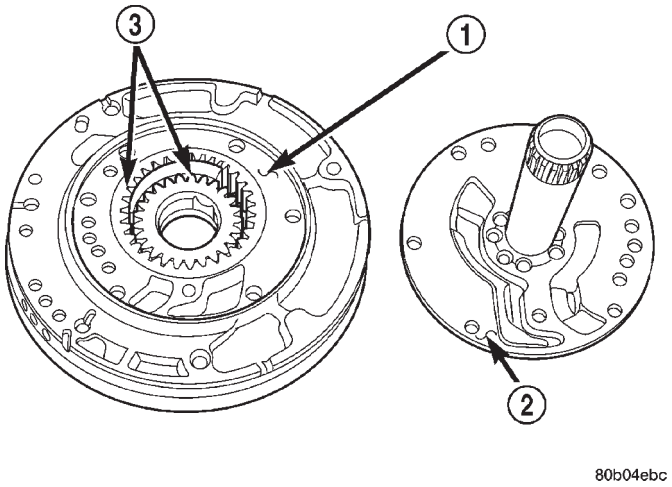

Fig. 179 Reaction Shaft Support

1 – PUMP HOUSING
2 – REACTION SHAFT SUPPORT
3 – PUMP GEARS

(3) Remove the pump gears and check for wear and damage.

(4) Install the gears and check clearances.

(5) Measure the clearance between the outer gear and the pump pocket (Fig. 180). Clearance should be 0.045-0.141mm (0.0018-0.0056 in.)

(6) Position an appropriate piece of Plastigage across both pump gears.

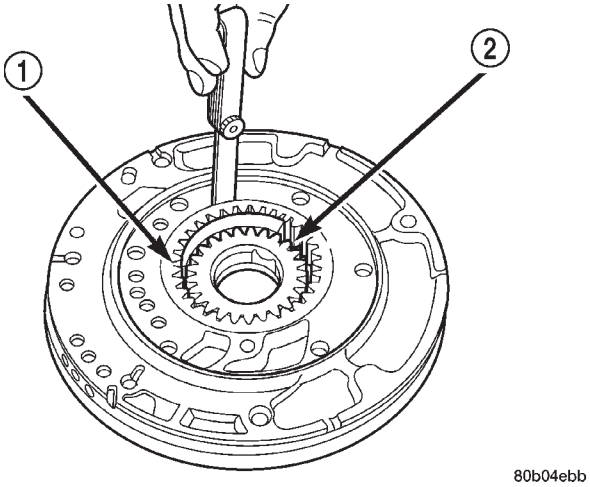

Fig. 180 Measure Outer Gear to Pocket

1 – OUTER GEAR
2 – POCKET

(7) Align the Plastigage to a flat area on the reaction shaft support housing.

(8) Install the reaction shaft to the pump housing. Tighten the bolts to 27 N·M (20 ft. lbs.)

(9) Remove bolts and carefully separate the housings. Measure the Plastigage following the instructions supplied.

(10) Clearance between outer gear side and the reaction shaft support should be 0.020-0.046mm (0.008-0.0018 in.). Clearance between inner gear side and the reaction shaft support should be 0.020-0.046mm (0.008-0.0018 in.).

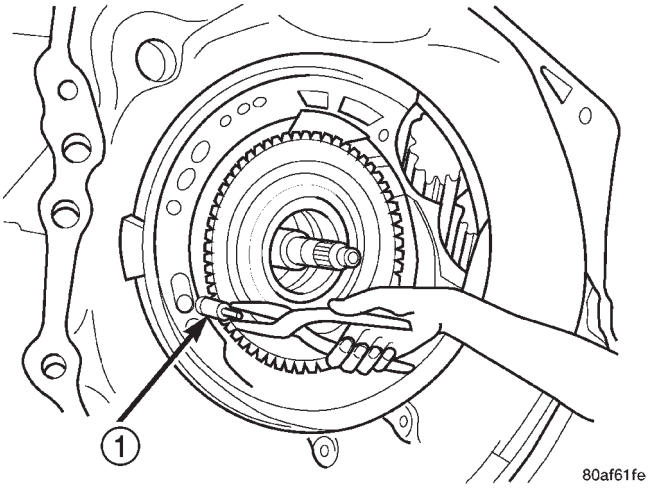

Fig. 181 Remove Bypass Valve

1 – COOLER BYPASS VALVE

DISASSEMBLY AND ASSEMBLY (Continued)

CAUTION: The cooler bypass valve must be replaced if a transaxle failure has occurred. Do not reuse old valve or attempt to clean old valve. When installing bypass valve, insert with O-ring end towards rear of case.

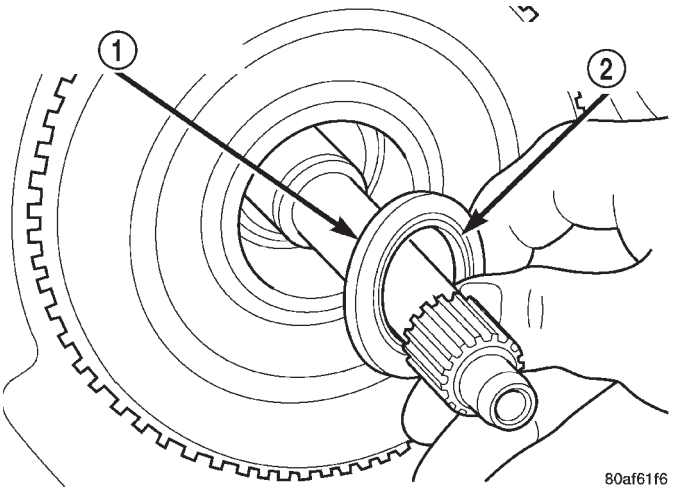

Fig. 182 Remove Caged Needle Bearing

1 – #1 CAGED NEEDLE BEARING
2 – NOTE: TANGED SIDE OUT

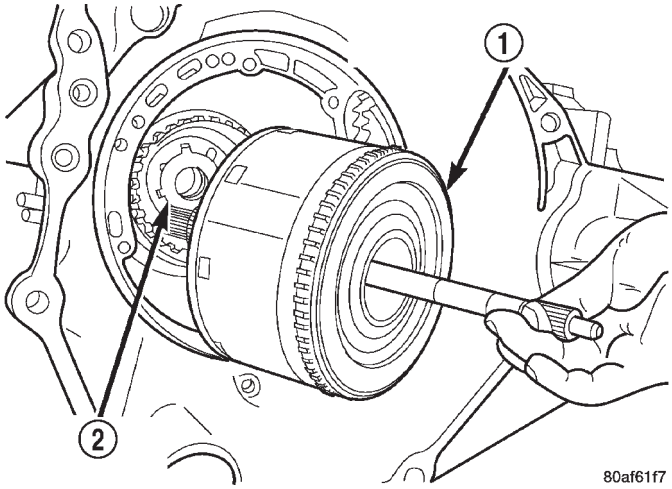

Fig. 183 Remove Input Clutches Assembly

1 – INPUT CLUTCHES ASSEMBLY
2 – #4 THRUST WASHER

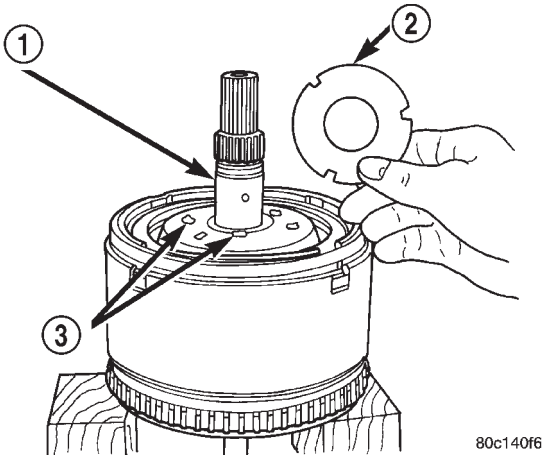

Fig. 184 No. 4 Thrust Plate

1 – OVERDRIVE SHAFT ASSEMBLY
2 – #4 THRUST PLATE (SELECT)
3 – 3 DABS OF PETROLATUM FOR RETENTION

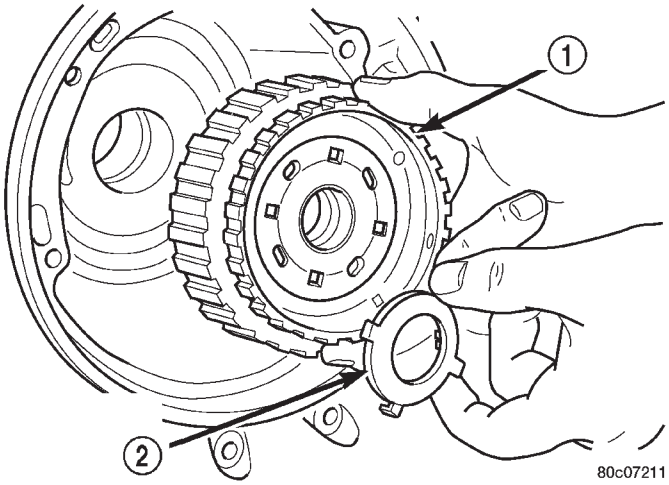

Fig. 185 Remove Front Sun Gear Assembly

1 – FRONT SUN GEAR ASSEMBLY
2 – #4 THRUST WASHER (FOUR TABS)

DISASSEMBLY AND ASSEMBLY (Continued)

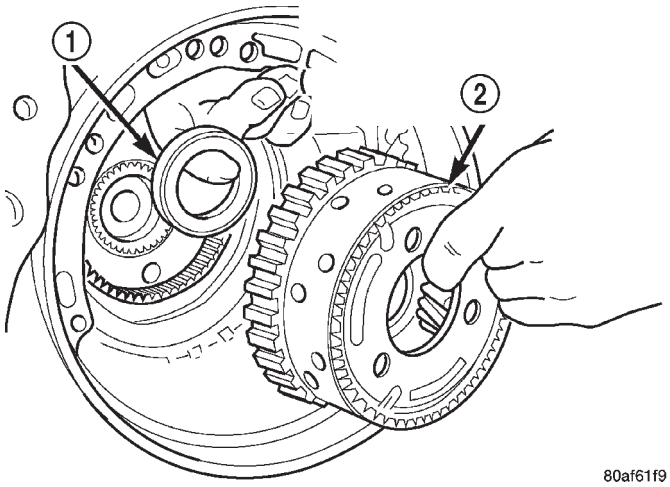

Fig. 186 Remove Front Carrier and Rear Annulus Assembly

1 – #6 NEEDLE BEARING
2 – FRONT CARRIER AND REAR ANNULUS ASSEMBLY (TWIST AND PULL OR PUSH TO REMOVE OR INSTALL).

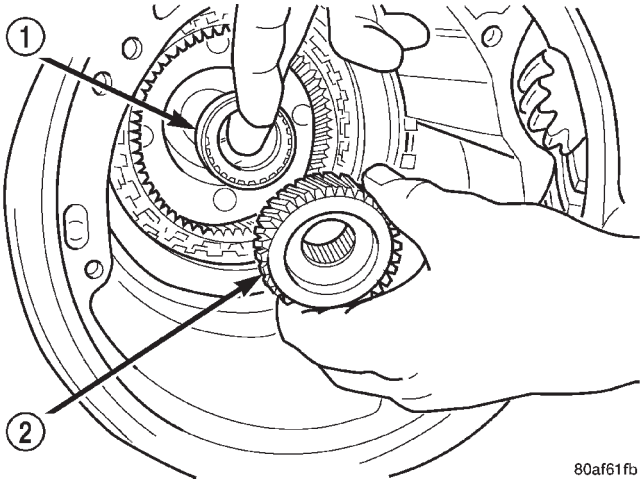

Fig. 187 Remove Rear Sun Gear

1 – #7 NEEDLE BEARING
2 – REAR SUN GEAR

NOTE: Verify that Miller Tool 5058 is centered properly to the 2/4 clutch retainer before depressing the tool.

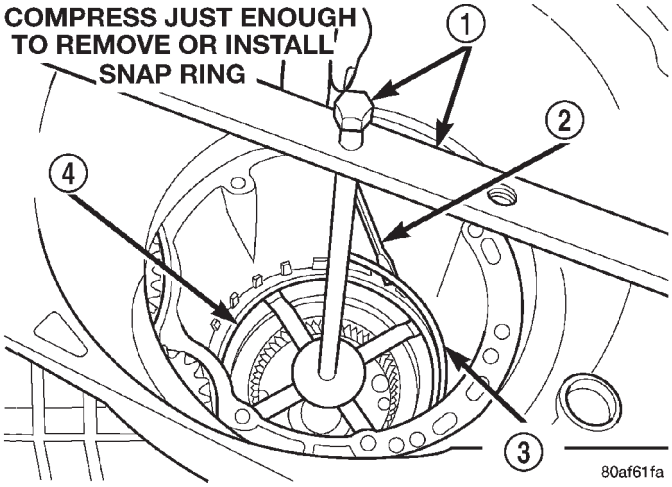

Fig. 188 Remove 2/4 Clutch Retainer Snap Ring

1 – TOOL 5058
2 – SCREWDRIVER
3 – SNAP RING
4 – 2/4 CLUTCH RETAINER

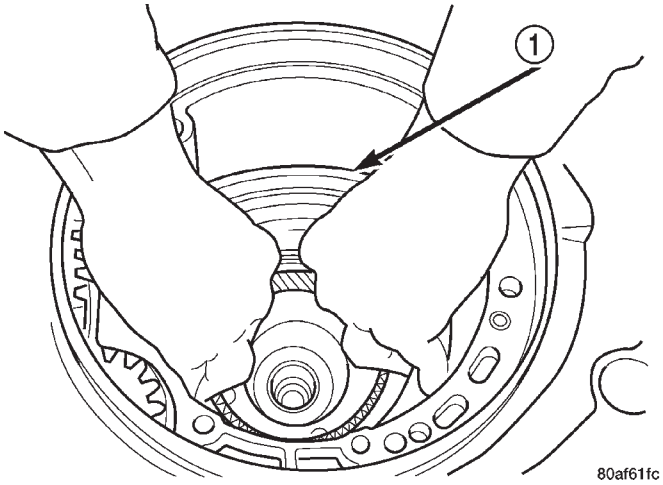

Fig. 189 Remove 2/4 Clutch Retainer

1 – 2/4 CLUTCH RETAINER

DISASSEMBLY AND ASSEMBLY (Continued)

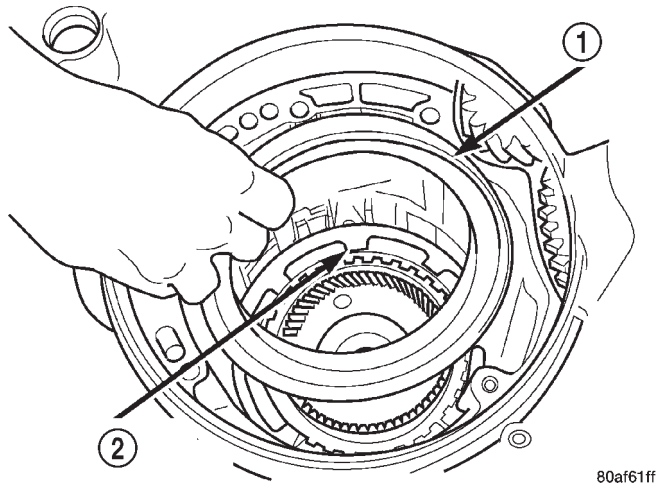

Fig. 190 2/4 Clutch Retainer

1 – 2/4 CLUTCH RETAINER
2 – 2/4 CLUTCH RETURN SPRING

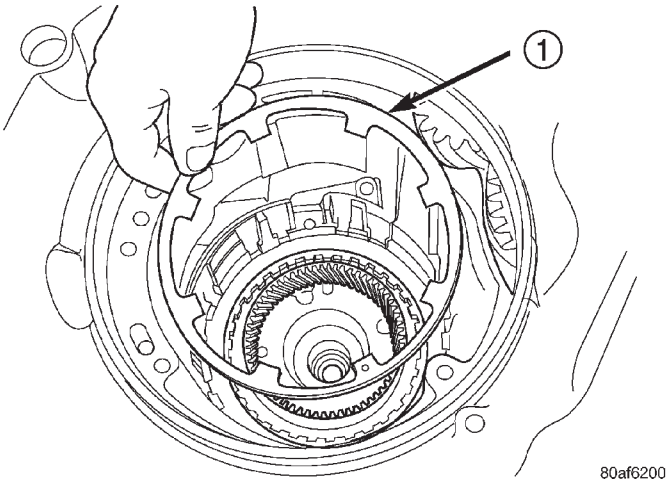

Fig. 191 Remove 2/4 Clutch Return Spring

1 – 2/4 CLUTCH RETURN SPRING

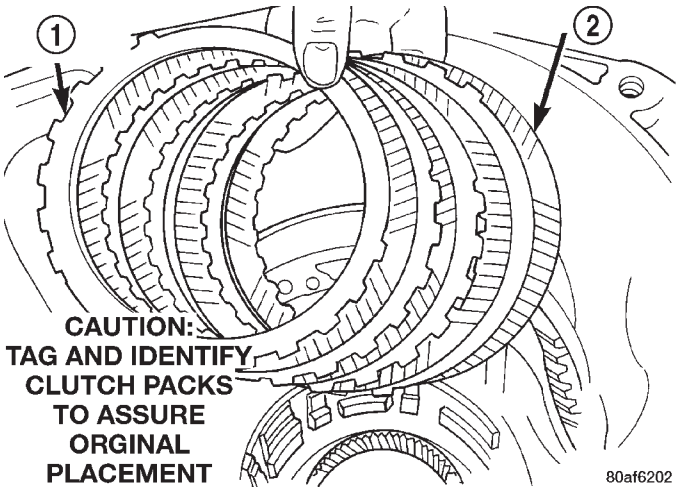

Fig. 192 Remove 2/4 Clutch Pack

1 – CLUTCH PLATE (4)
2 – CLUTCH DISC (4)

NOTE: Tag 2/4 clutch pack for reassembly identification.

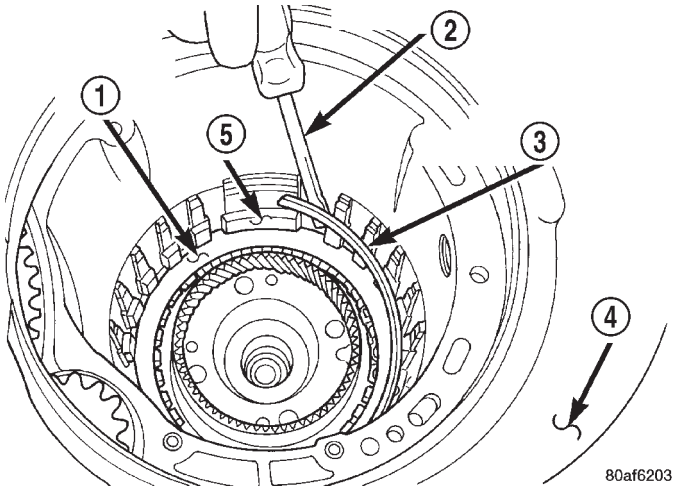

Fig. 193 Remove Tapered Snap Ring

1 – LOW/REVERSE CLUTCH REACTION PLATE
2 – SCREWDRIVER
3 – LOW/REVERSE TAPERED SNAP RING (TAPERED SIDE UP)
4 – OIL PAN FACE
5 – LONG TAB

DISASSEMBLY AND ASSEMBLY (Continued)

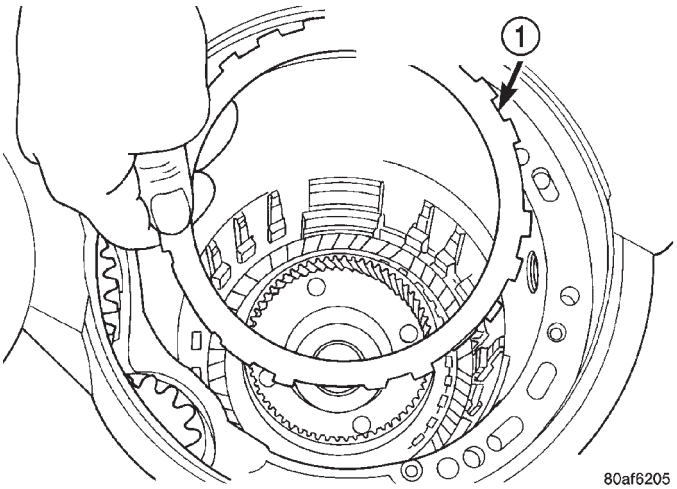

Fig. 194 Remove Low/Reverse Reaction Plate

1 – LOW/REVERSE REACTION PLATE (FLAT SIDE UP)

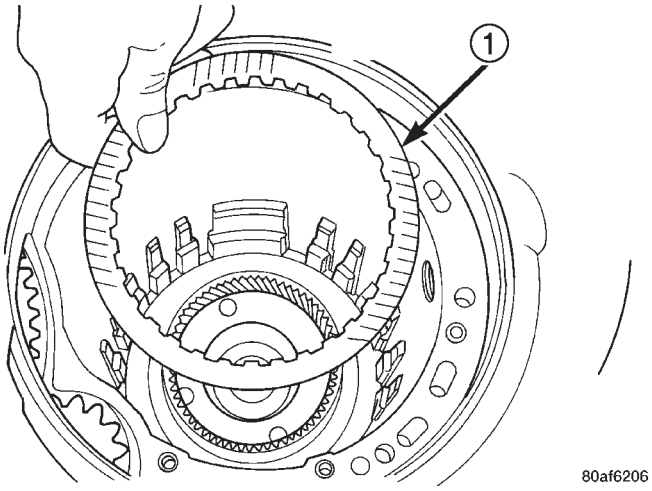

Fig. 195 Remove One Disc

1 – ONE DISC FROM LOW/REVERSE CLUTCH

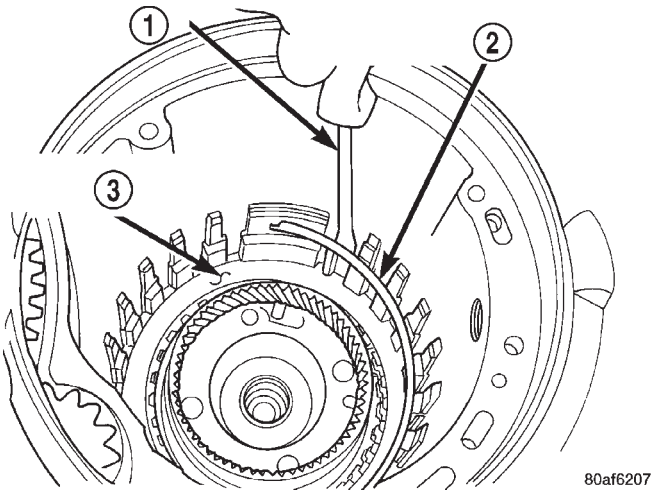

Fig. 196 Remove Low/Reverse Reaction Plate Snap Ring

1 – SCREWDRIVER
2 – LOW/REVERSE REACTION PLATE FLAT SNAP RING
3 – DO NOT SCRATCH CLUTCH PLATE

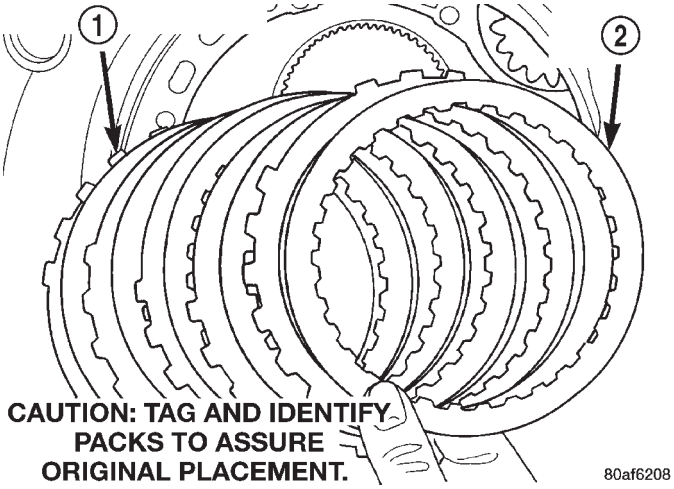

Fig. 197 Remove Low/Reverse Clutch Pack

1 – CLUTCH PLATES (5)
2 – CLUTCH DISCS (5)

DISASSEMBLY AND ASSEMBLY (Continued)

NOTE: Tag low/reverse clutch pack for reassembly identification.

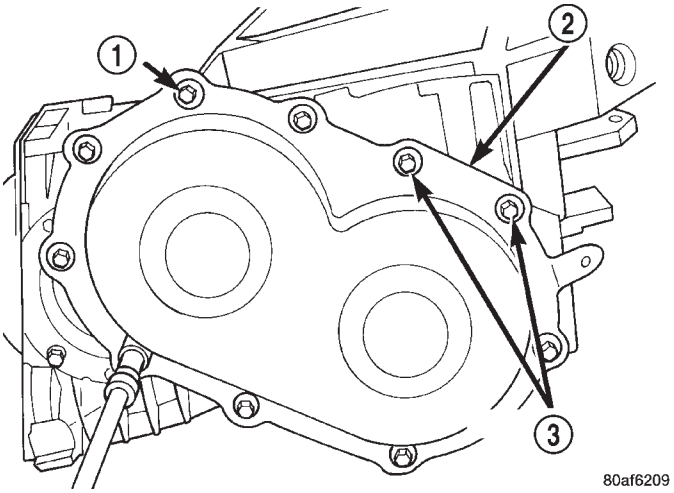

Fig. 198 Remove Rear Cover Bolts

1 – REAR COVER BOLTS
2 – REAR COVER
3 – USE SEALANT ON BOLTS

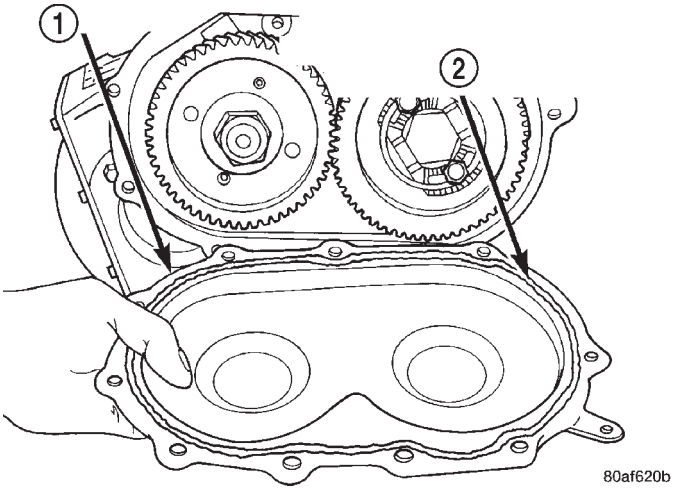

Fig. 199 Remove Rear Cover

1 – REAR COVER
2 – 1/8 INCH BEAD OF MOPAR SILICONE RUBBER ADHESIVE SEALANT AS SHOWN

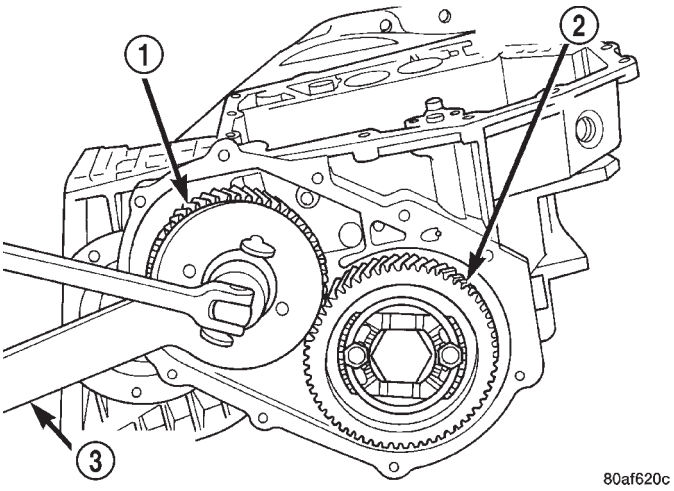

Fig. 200 Remove Transfer Shaft Gear Nut

1 – TRANSFER SHAFT GEAR
2 – OUTPUT GEAR
3 – SPECIAL TOOL 6259

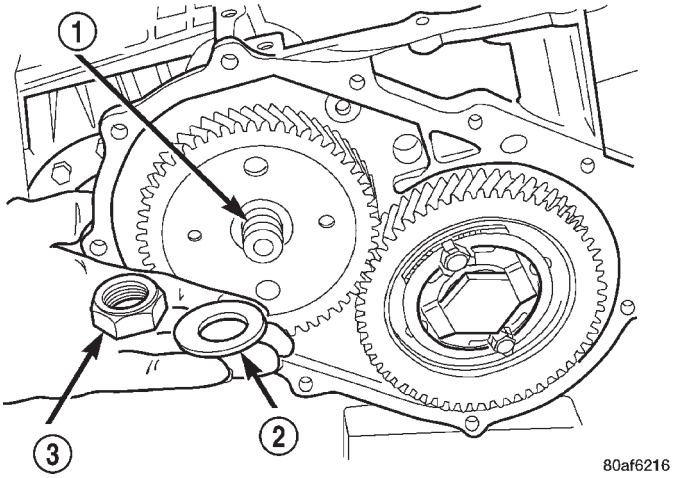

Fig. 201 Transfer Shaft Gear Nut and Coned Washer

1 – TRANSFER SHAFT
2 – LOCK WASHER
3 – NUT

DISASSEMBLY AND ASSEMBLY (Continued)

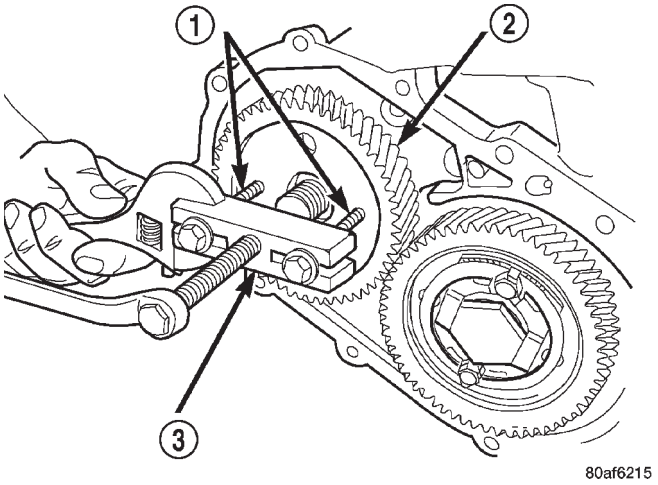

Fig. 202 Remove Transfer Shaft Gear

1 – SPECIAL TOOL L-4407–6
2 – TRANSFER SHAFT GEAR
3 – SPECIAL TOOL L-4407

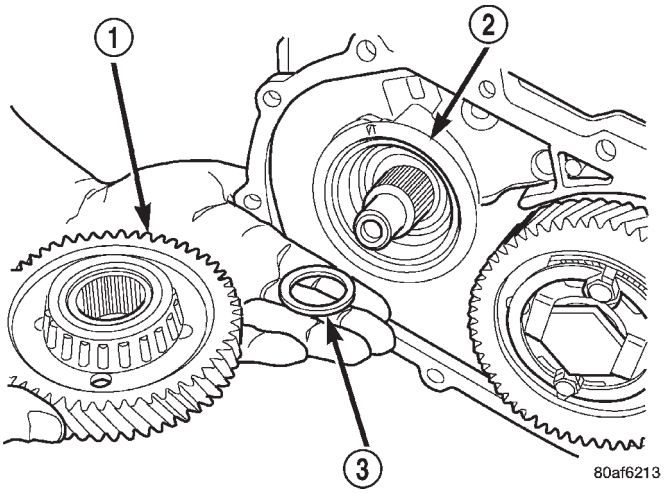

Fig. 203 Remove Transfer Shaft Gear and (Select) Shim

1 – TRANSFER SHAFT GEAR
2 – BEARING CUP RETAINER
3 – SHIM (SELECT)

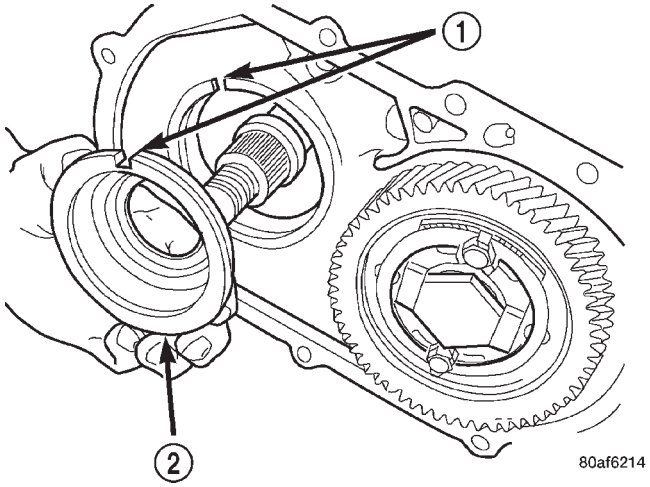

Fig. 204 Remove Bearing Cup Retainer

1 – ALIGN INDEXING TAB TO SLOT
2 – BEARING CUP RETAINER

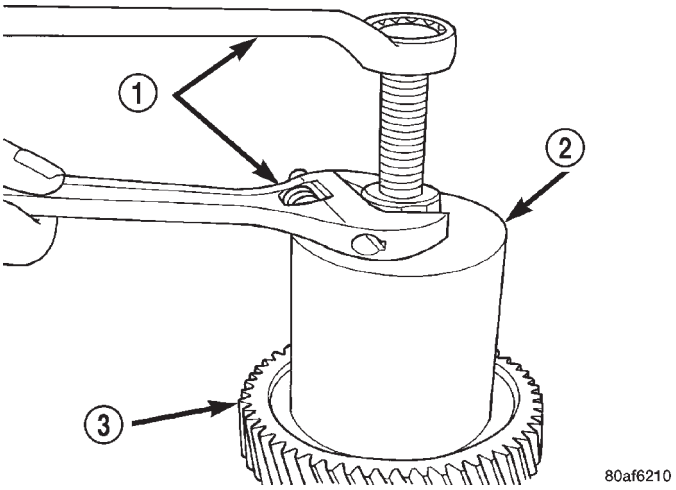

Fig. 205 Remove Transfer Gear Bearing Cone

1 – WRENCHES
2 – TOOL 5048 WITH JAWS TOOL 5048–4 AND BUTTON TOOL L-4539–2
3 – TRANSFER SHAFT GEAR

DISASSEMBLY AND ASSEMBLY (Continued)

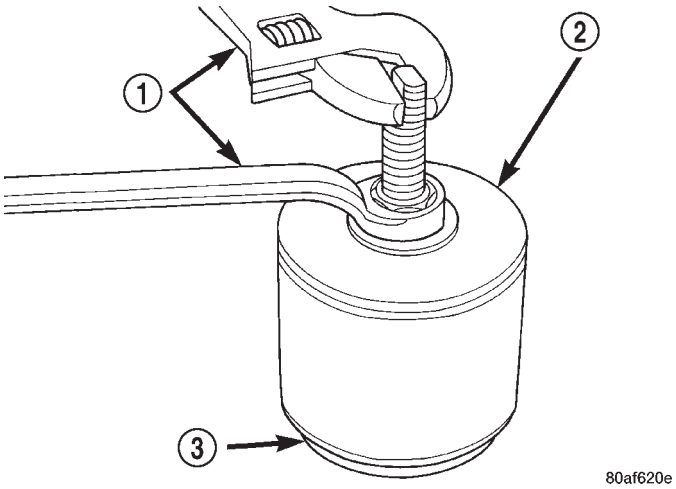

Fig. 206 Remove Transfer Shaft Bearing Cup

1 – WRENCHES
2 – TOOL 6062
3 – TRANSFER SHAFT BEARING CUP RETAINER

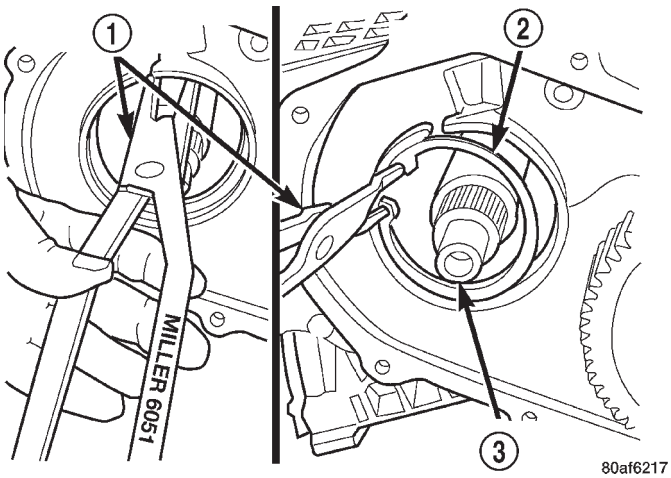

Fig. 207 Remove Transfer Shaft Bearing Snap Ring

1 – SNAP RING PLIERS TOOL 6051
2 – TRANSFER SHAFT BEARING SNAP RING
3 – TRANSFER SHAFT

NOTE: Screw Tool 5049-A onto transfer shaft. Remove transfer shaft.

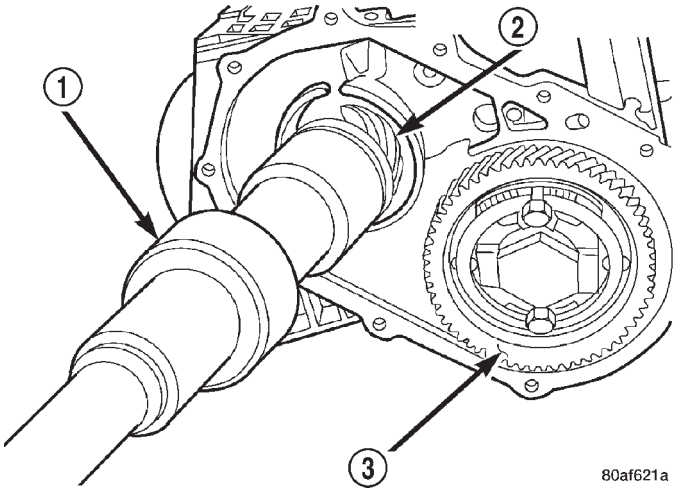

Fig. 208 Remove Transfer Shaft

1 – SPECIAL TOOL 5049–A
2 – TRANSFER SHAFT
3 – OUTPUT GEAR

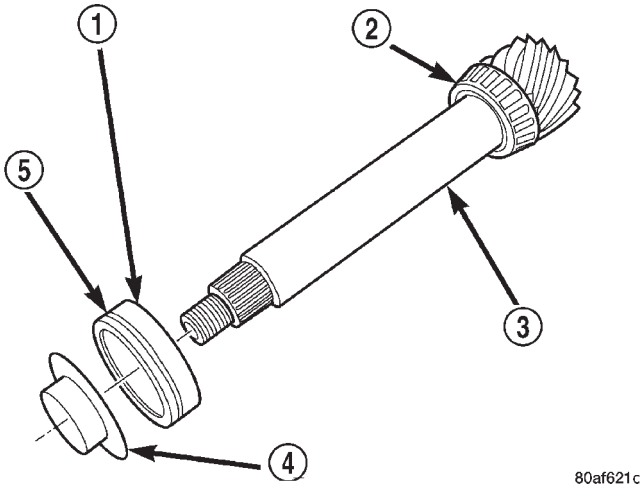

Fig. 209 Bearing Cup Removed

1 – BEARING CUP
2 – BEARING CONE
3 – TRANSFER SHAFT
4 – OIL BAFFLE
5 – O-RING

DISASSEMBLY AND ASSEMBLY (Continued)

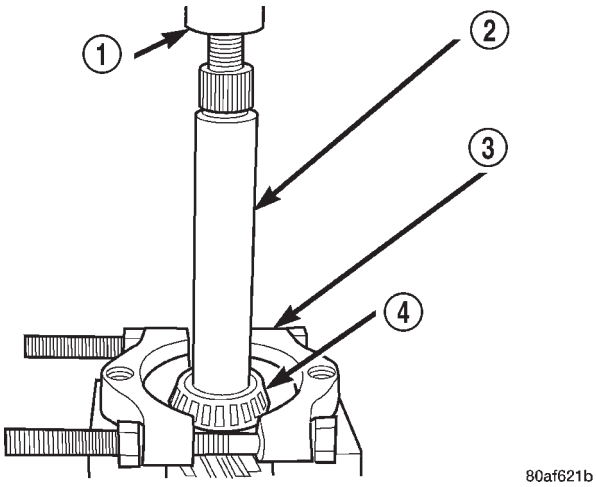

Fig. 210 Remove Transfer Shaft Bearing Cone

1 – ARBOR PRESS RAM
2 – TRANSFER SHAFT
3 – TOOL P-334
4 – BEARING CONE

NOTE: Remove output gear stirrup and strap bolts.

All transaxles utilize a stirrup and retaining strap that is attached to the output gear. The stirrup prevents the output gear retaining bolt from turning and backing out of the rear carrier. The strap is used to hold the stirrup to the output gear and prevent the stirrup retaining bolts from backing out.

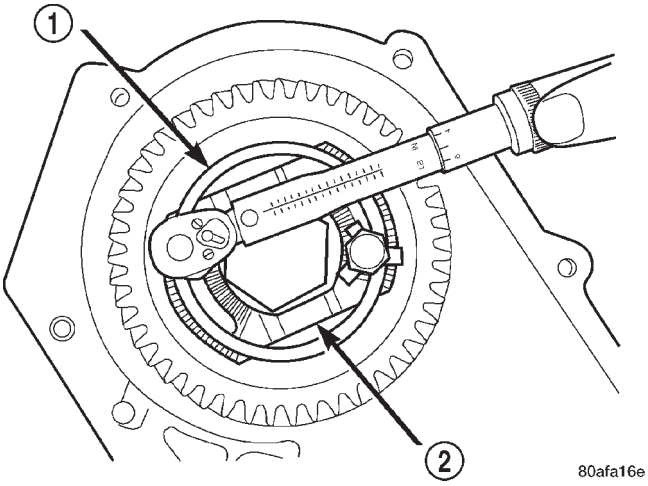

Fig. 211 Loosen Stirrup Strap Bolts

1 – RETAINING STRAP
2 – STIRRUP

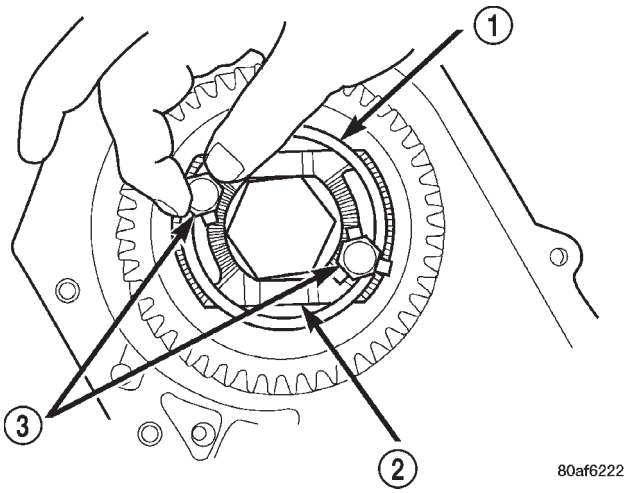

Fig. 212 Remove Strap Bolts

1 – RETAINING STRAP
2 – STIRRUP
3 – RETAINING STRAP BOLTS

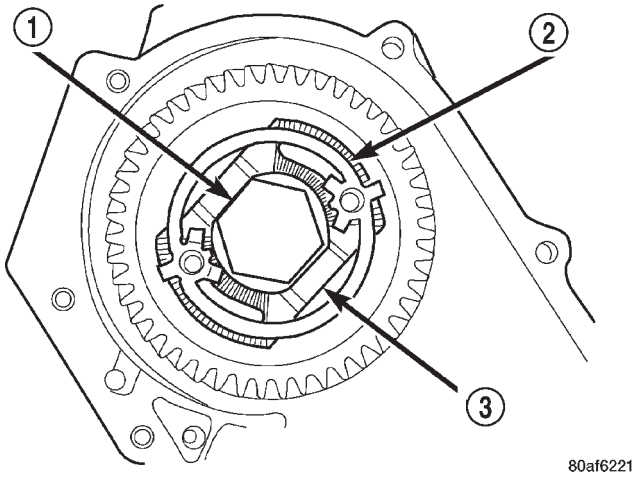

Fig. 213 Remove Stirrup Strap

1 – OUTPUT GEARBOLT
2 – RETAINING STRAP
3 – STIRRUP

DISASSEMBLY AND ASSEMBLY (Continued)

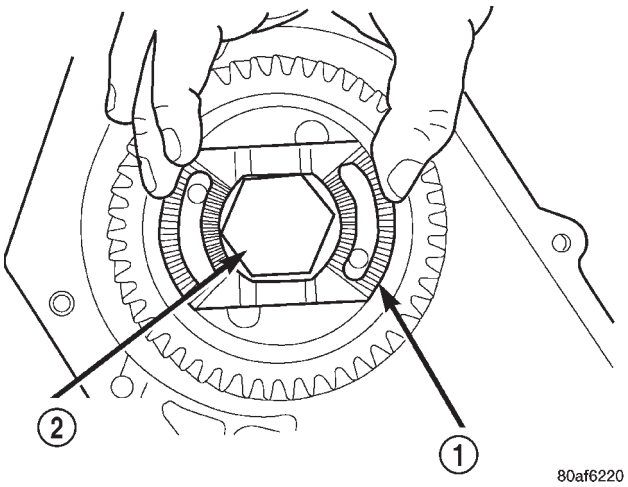

Fig. 214 Remove Stirrup

1 – STIRRUP
2 – OUTPUT GEAR RETAINING BOLT

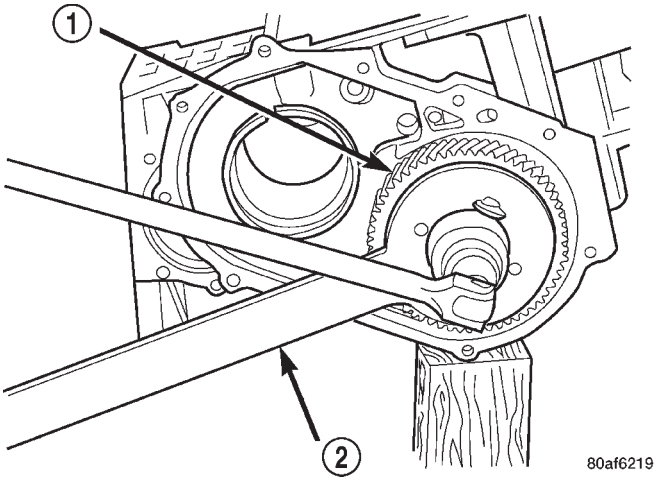

Fig. 215 Remove Output Gear Bolt

1 – OUTPUT GEAR
2 – TOOL 6259

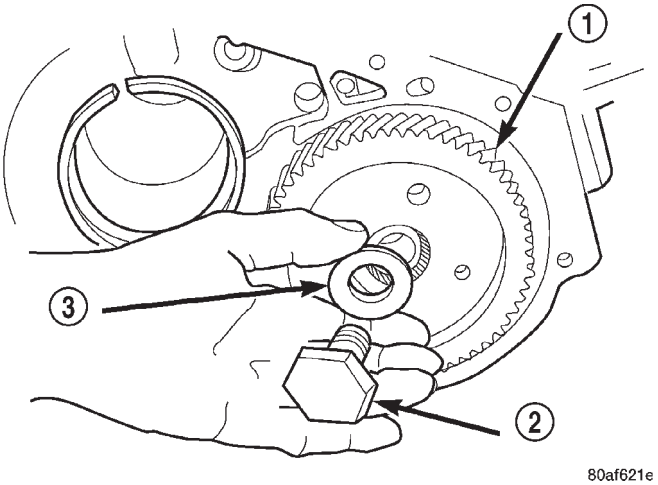

Fig. 216 Output Gear Bolt and Washer

1 – OUTPUT GEAR
2 – BOLT
3 – CONED LOCK WASHER

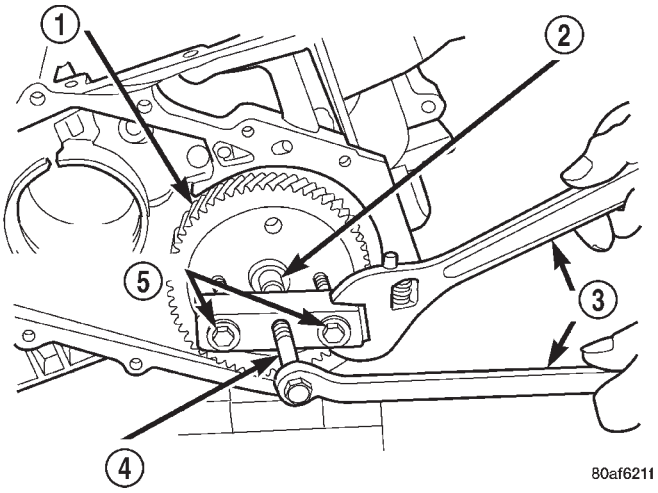

Fig. 217 Remove Output Gear

1 – OUTPUT GEAR
2 – BUTTON TOOL 6055
3 – WRENCHES
4 – TOOL L-4407
5 – BOLTS TOOL L-4407–6

DISASSEMBLY AND ASSEMBLY (Continued)

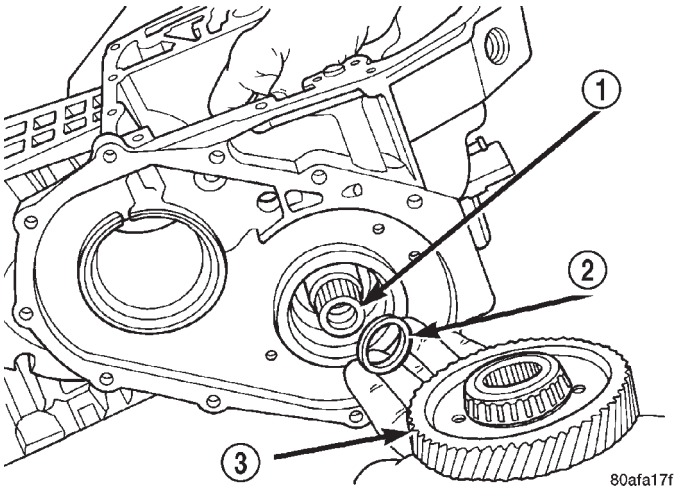

Fig. 218 Output Gear and (Select) Shim

1 – REAR CARRIER ASSEMBLY
2 – SHIM (SELECT)
3 – OUTPUT GEAR

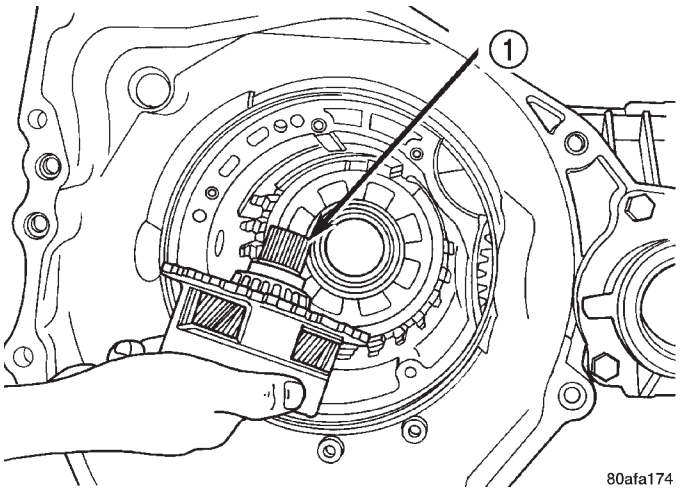

Fig. 220 Remove Rear Carrier Assembly

1 – REAR CARRIER ASSEMBLY

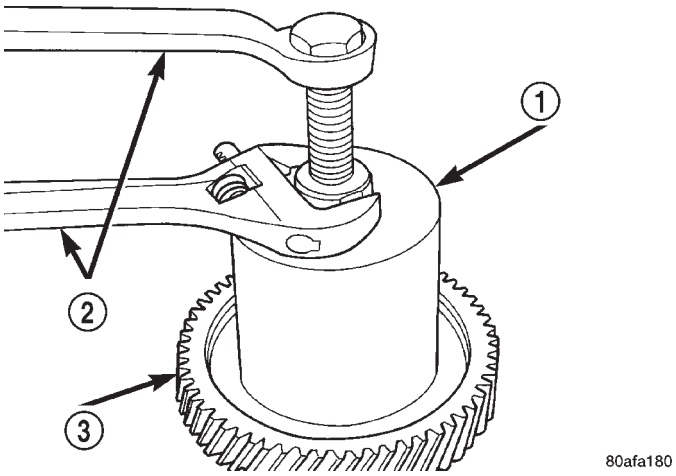

Fig. 219 Remove Bearing Cone

1 – TOOL 5048 WITH JAWS 5048–5 AND BUTTON L-4539–2
2 – WRENCHES
3 – OUTPUT GEAR

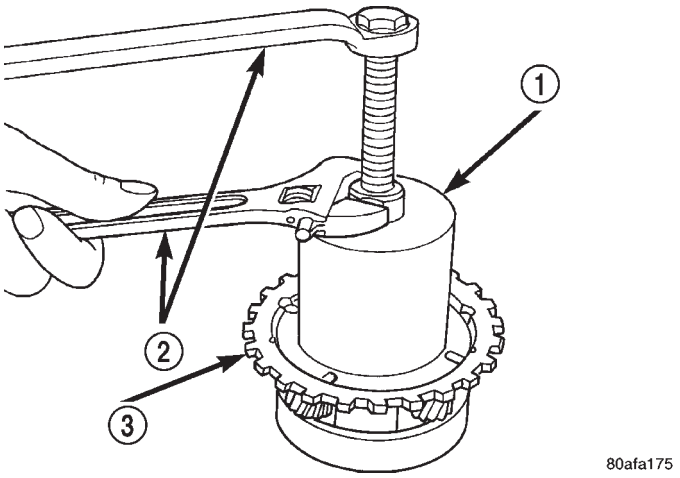

Fig. 221 Remove Rear Carrier Bearing Cone

1 – TOOL 5048 WITH JAWS 5048–3 AND BUTTON 6055
2 – WRENCHES
3 – REAR CARRIER ASSEMBLY

DISASSEMBLY AND ASSEMBLY (Continued)

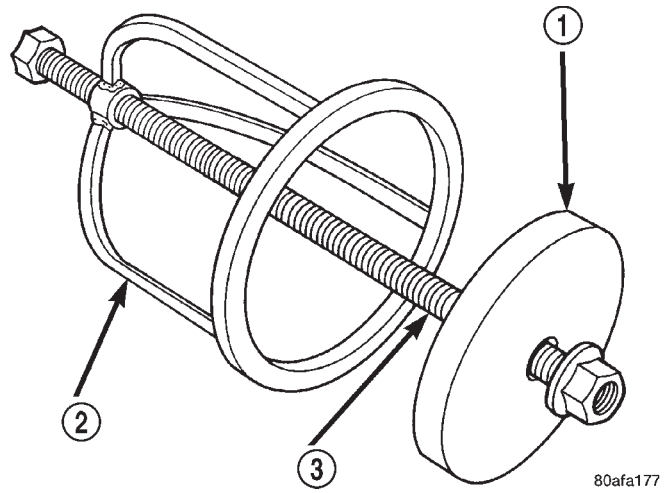

Fig. 222 Low/Reverse Spring Compressor Tool

1 – TOOL 6057
2 – TOOL 5059
3 – TOOL 5058–3

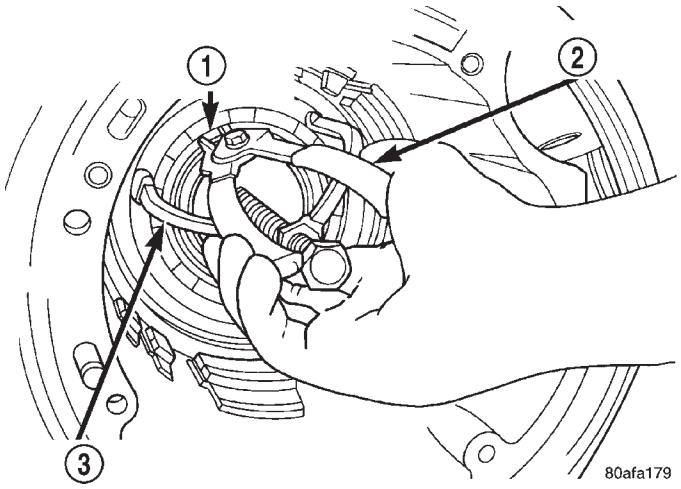

Fig. 224 Remove Snap Ring

1 – SNAP RING OPENING MUST BE BETWEEN SPRING LEVERS (AS SHOWN)
2 – SNAP RING PLIERS
3 – TOOL 6057

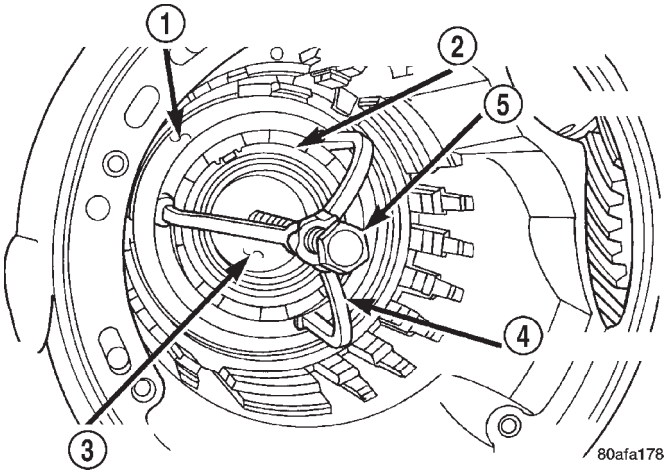

Fig. 223 Compressor Tool in Use

1 – LOW/REVERSE CLUTCH RETURN SPRING
2 – SNAP RING (INSTALL AS SHOWN)
3 – TOOL 6057
4 – TOOL 5059
5 – TOOL 5058–3

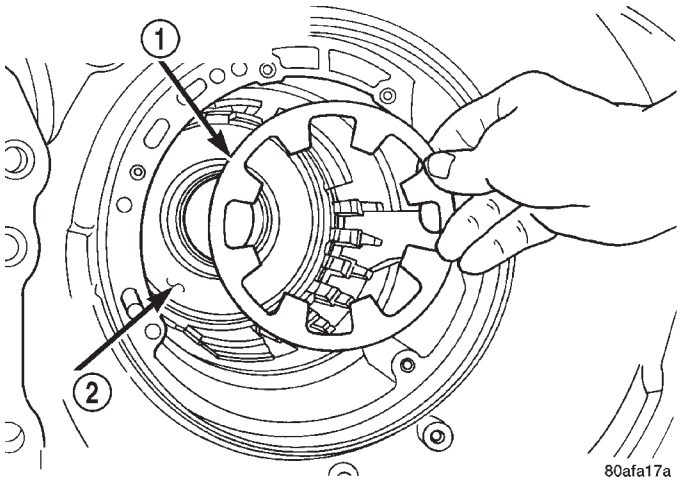

Fig. 225 Low/Reverse Piston Return Spring

1 – LOW/REVERSE PISTON RETURN SPRING
2 – PISTON

DISASSEMBLY AND ASSEMBLY (Continued)

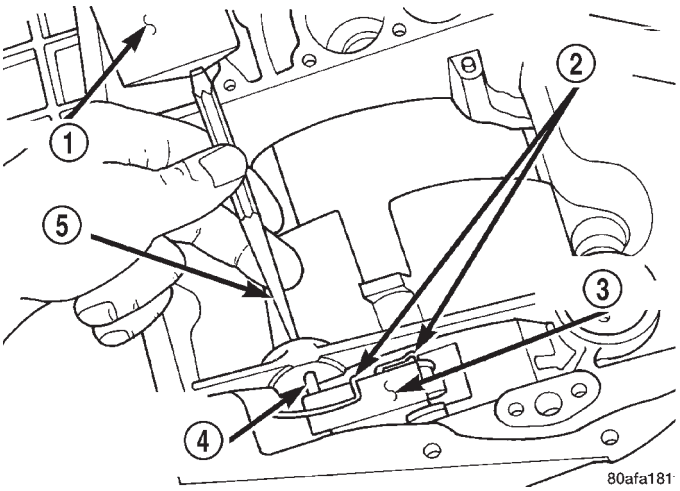

Fig. 226 Drive Out Anchor Shaft

1 – HAMMER
2 – ANTIRATCHET SPRING
3 – GUIDE BRACKET
4 – PARK SPRAG GUIDE BRACKET ANCHOR SHAFT
5 – DRIFT

CAUTION: When installing, be sure guide bracket and split sleeve touch the rear of the transaxle case.

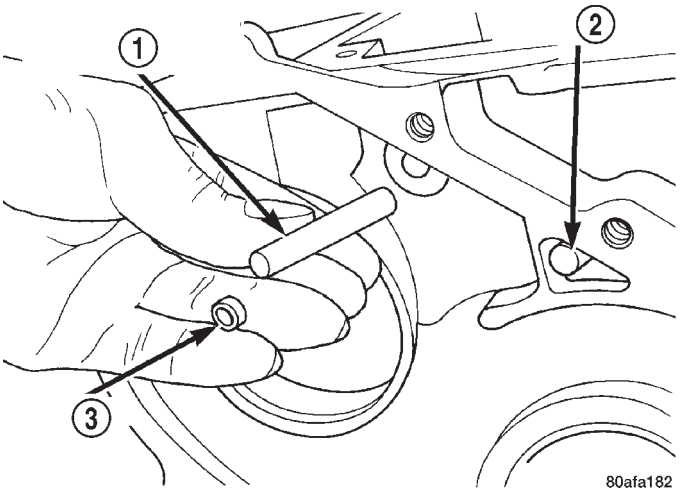

Fig. 227 Remove Anchor Shaft and Plug

1 – GUIDE BRACKET ANCHOR SHAFT
2 – PIVOT SHAFT
3 – ANCHOR SHAFT PLUG

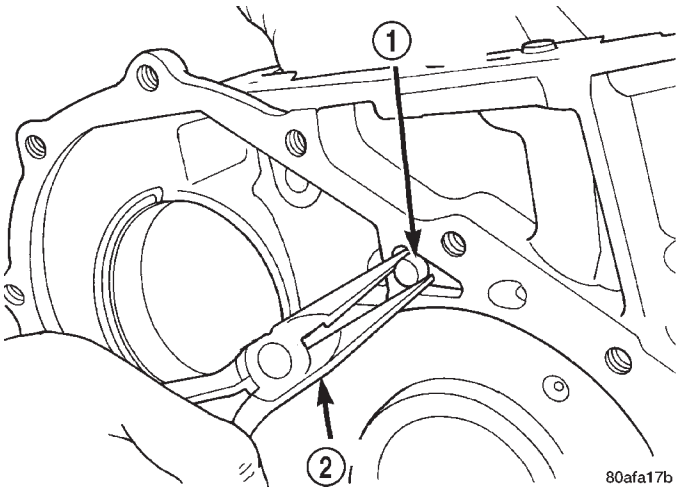

Fig. 228 Remove Guide Bracket Pivot Shaft

1 – GUIDE BRACKET PIVOT SHAFT
2 – PLIERS

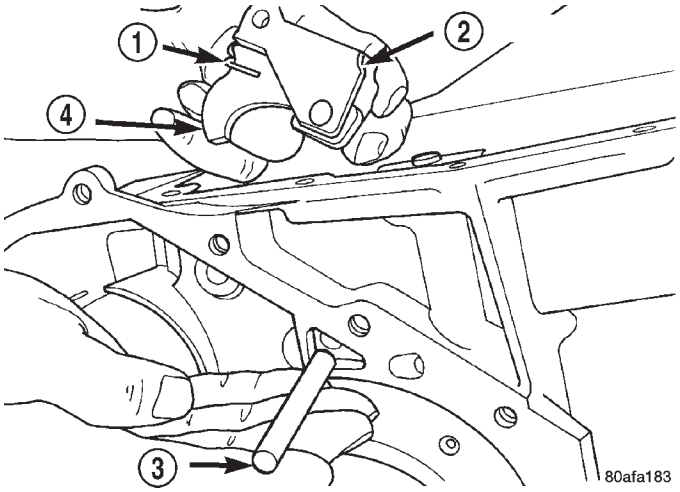

Fig. 229 Pivot Shaft and Guide Bracket

1 – ANTIRATCHET SPRING
2 – GUIDE BRACKET
3 – PIVOT SHAFT
4 – PAWL

DISASSEMBLY AND ASSEMBLY (Continued)

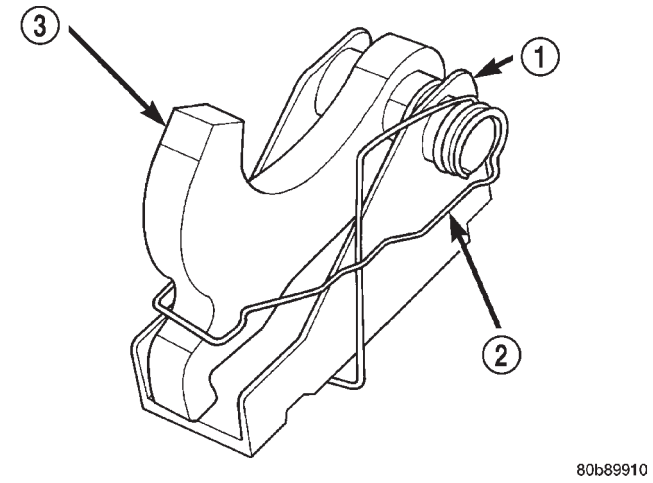

Fig. 230 Guide Bracket

1 – GUIDE BRACKET
2 – ANTIRATCHET SPRING (MUST BE ASSEMBLED AS SHOWN)
3 – PAWL

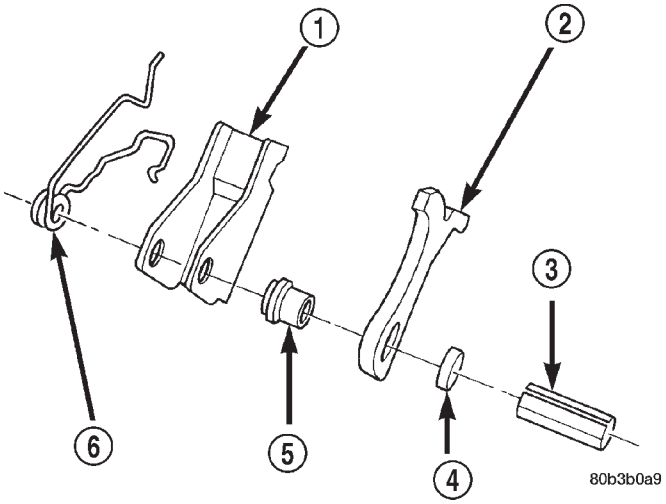

Fig. 231 Guide Bracket Disassembled

1 – GUIDE BRACKET
2 – PAWL
3 – SPLIT SLEEVE
4 – SPACER
5 – STEPPED SPACER
6 – ANTIRATCHET SPRING

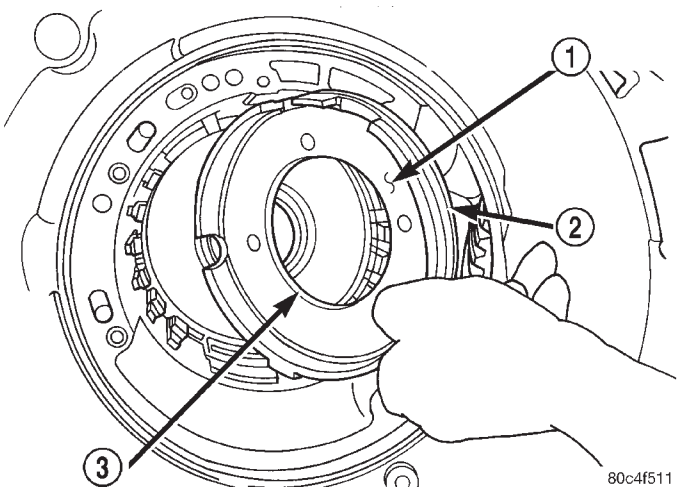

Fig. 232 Remove Low/Reverse Clutch Piston

1 – LOW/REVERSE CLUTCH PISTON
2 – SEAL
3 – SEAL

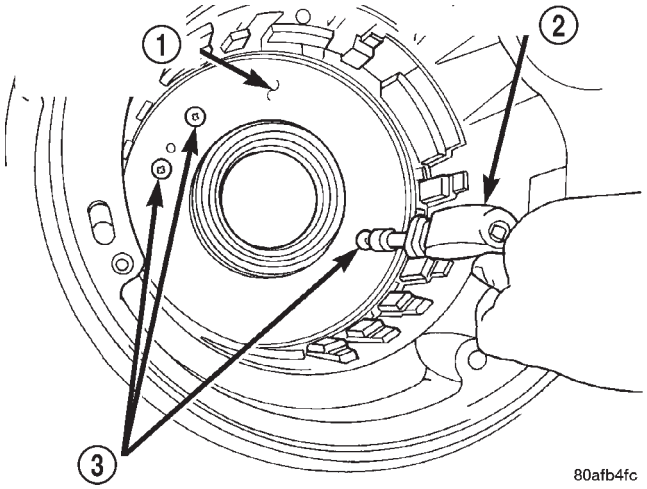

Fig. 233 Remove Piston Retainer Attaching Screws

1 – LOW/REVERSE CLUTCH PISTON RETAINER
2 – SCREWDRIVER
3 – TORX-LOC SCREWS

DISASSEMBLY AND ASSEMBLY (Continued)

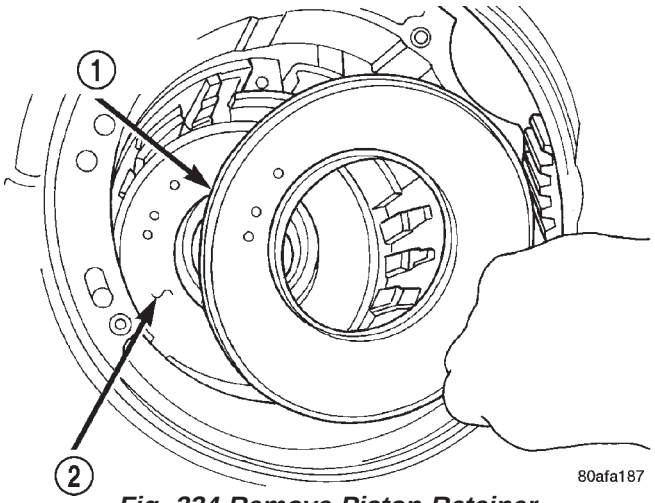

Fig. 234 Remove Piston Retainer

1 – LOW/REVERSE CLUTCH PISTON RETAINER
2 – GASKET

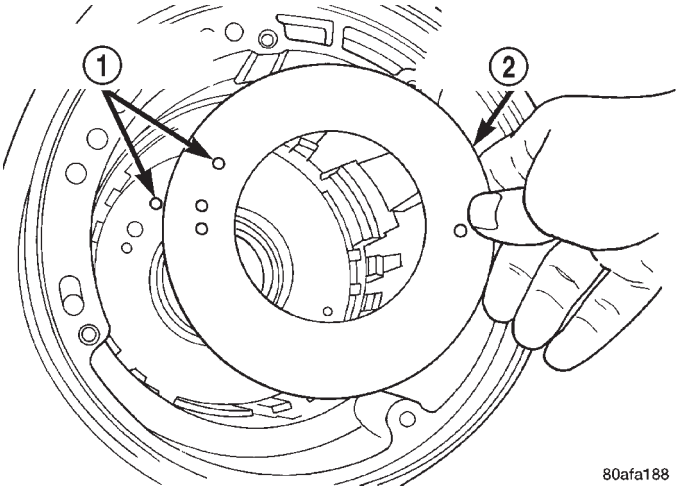

Fig. 235 Remove Piston Retainer Gasket

1 – GASKET HOLES MUST LINE UP
2 – LOW/REVERSE CLUTCH PISTON RETAINER GASKET

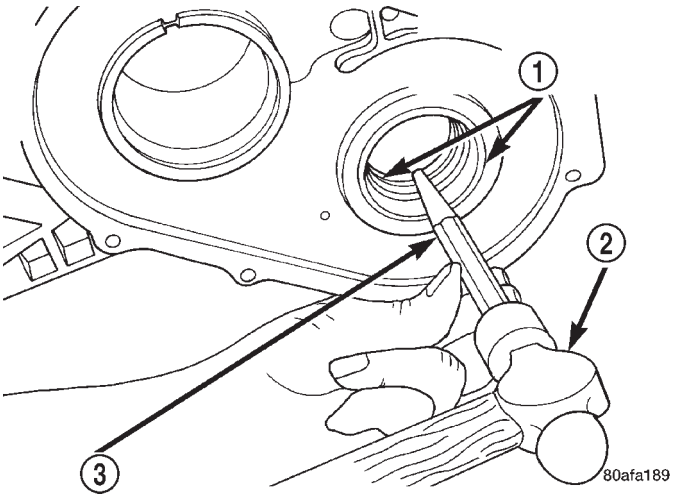

Fig. 236 Remove Output Bearing Inner Cup

1 – OUTPUT BEARING CUPS (REPLACE IN PAIRS)
2 – HAMMER
3 – BRASS DRIFT

CAUTION: Drift bearing cup all the way around.

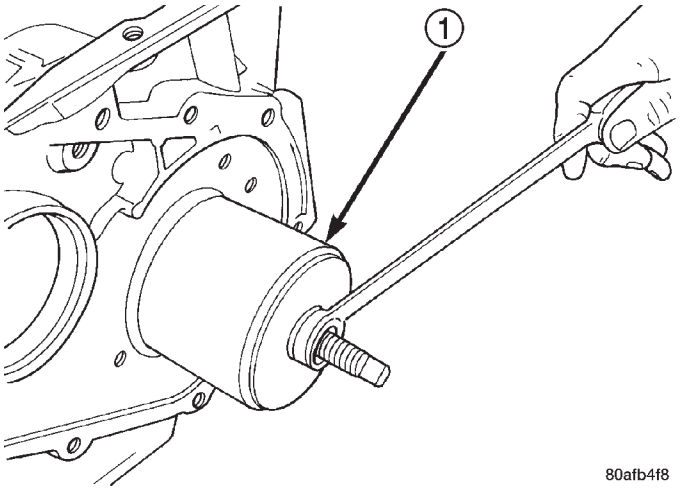

Fig. 237 Remove Output Bearing Outer Cup

1 – TOOL 6062

OIL PUMP

DISASSEMBLY, INSPECTION, & ASSEMBLY

When disassembling the transaxle it is necessary to inspect the oil pump for wear and damage.

(1) Remove the reaction shaft support bolts.

(2) Remove reaction shaft support from pump housing (Fig. 238).

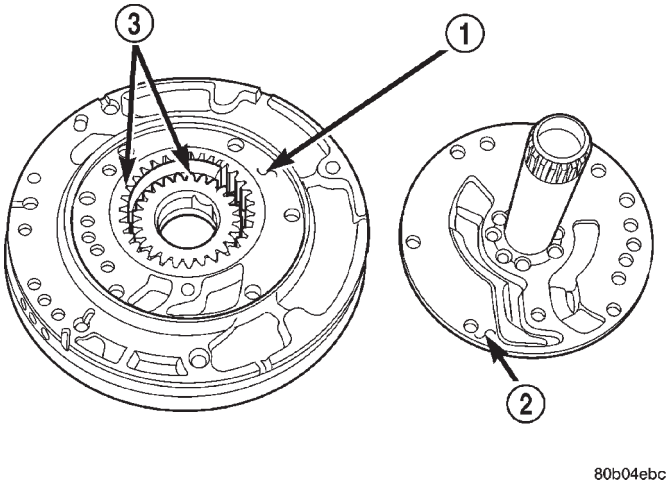

Fig. 238 Reaction Shaft Support

1 – PUMP HOUSING
2 – REACTION SHAFT SUPPORT
3 – PUMP GEARS

DISASSEMBLY AND ASSEMBLY (Continued)

(3) Remove the pump gears (Fig. 239) and check for wear and damage.

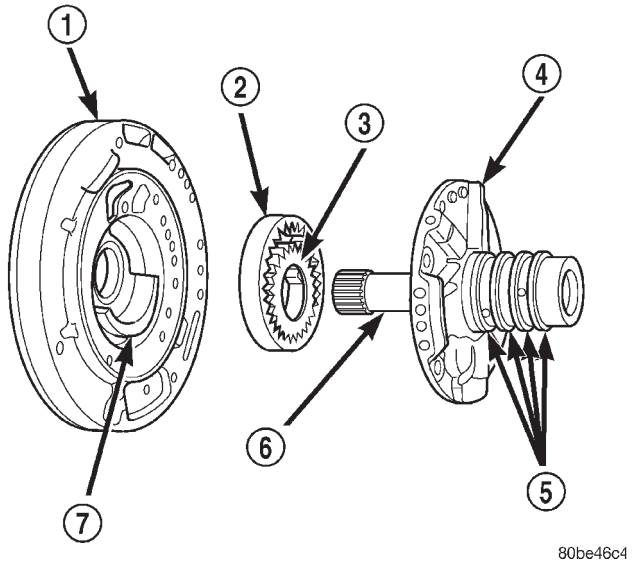

Fig. 239 Oil Pump Assembly

1 – PUMP HOUSING
2 – OUTER PUMP GEAR
3 – INNER PUMP GEAR
4 – REACTION SHAFT SUPPORT
5 – SEAL RINGS (4)
6 – REACTION SHAFT
7 – CRESCENT

(4) Re-install the gears and check clearances.

(5) Measure the clearance between the outer gear and the pump pocket (Fig. 240). Clearance should be 0.045-0.141mm (0.0018-0.0056 in.).

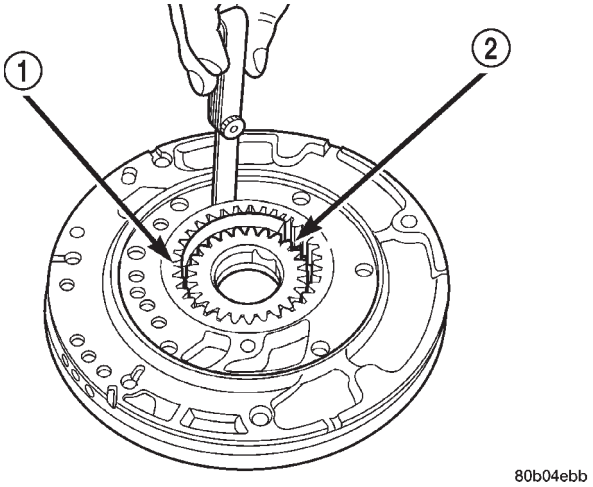

Fig. 240 Measure Outer Gear to Pocket

1 – OUTER GEAR
2 – POCKET

(6) Position an appropriate piece of Plastigage across both pump gears.

(7) Align the Plastigage to a flat area on the reaction shaft support housing.

(8) Install the reaction shaft to the pump housing. Tighten the bolts to 27 N·M (20 ft. lbs.).

(9) Remove bolts and carefully separate the housings. Measure the Plastigage following the instructions supplied.

(10) Clearance between outer gear side and the reaction shaft support should be 0.020-0.046 mm (0.008-0.0018 in.). Clearance between inner gear side and the reaction shaft support should be 0.020-0.046 mm (0.008-0.0018 in.).

INPUT CLUTCH ASSEMBLY

DISASSEMBLY

(1) Mount input clutch assembly to Input Clutch Pressure Fixture (Tool 8391).

(2) Tap down reverse clutch reaction plate to release pressure from snap ring (Fig. 241).

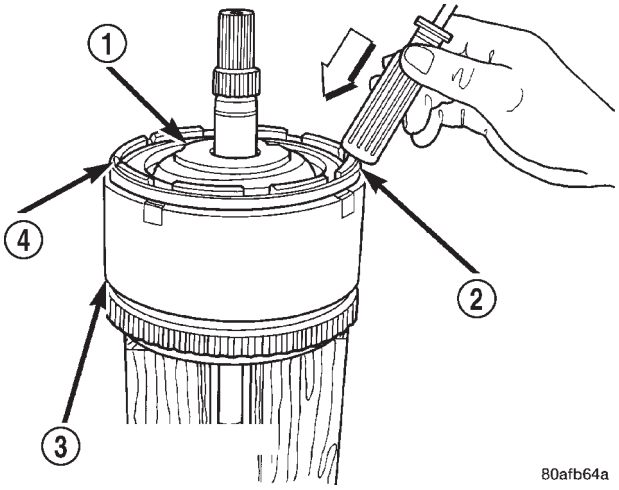

Fig. 241 Tapping Reaction Plate

1 – #4 THRUST PLATE (SELECT)
2 – TAP DOWN REVERSE CLUTCH REACTION PLATE TO REMOVE OR INSTALL SNAP RING
3 – INPUT SHAFT CLUTCHES RETAINER ASSEMBLY
4 – REVERSE CLUTCH REACTION PLATE

DISASSEMBLY AND ASSEMBLY (Continued)

(3) Remove reverse clutch snap ring (Fig. 242).

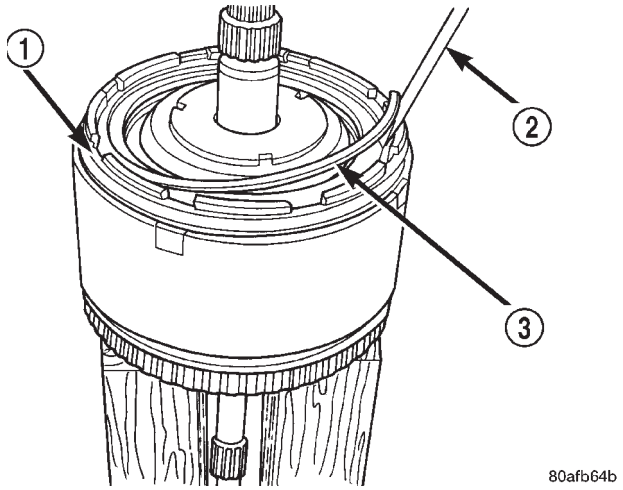

Fig. 242 Reverse Clutch Snap Ring

1 – REACTION PLATE
2 – SCREWDRIVER
3 – REVERSE CLUTCH SNAP RING (SELECT)

(4) Pry up and remove reverse clutch reaction plate (Fig. 243) (Fig. 244).

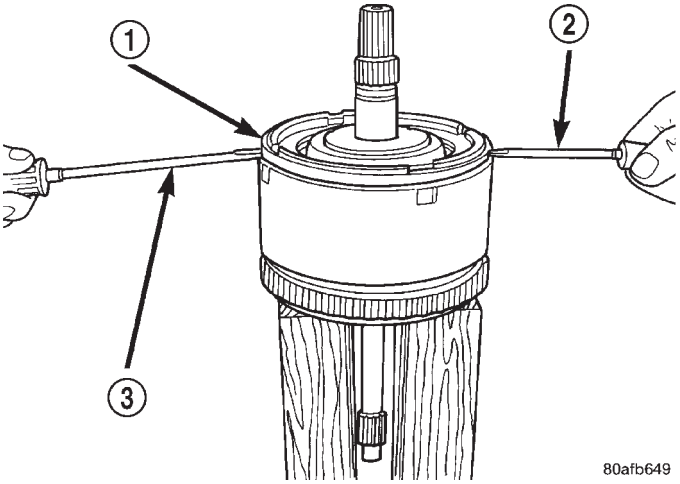

Fig. 243 Pry Reverse Clutch Reaction Plate

1 – REVERSE CLUTCH REACTION PLATE
2 – SCREWDRIVER
3 – SCREWDRIVER

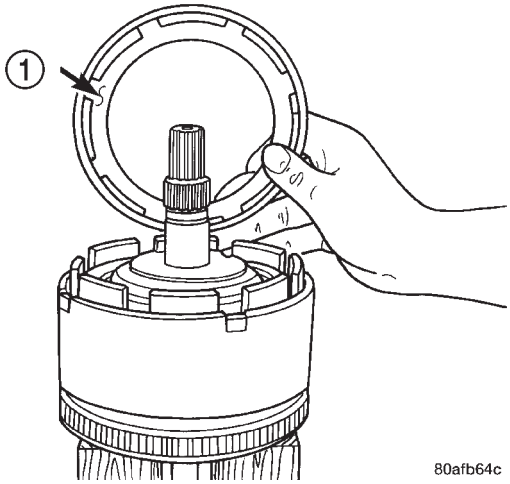

Fig. 244 Reverse Clutch Reaction Plate

1 – REVERSE CLUTCH REACTION PLATE (INSTALL FLAT SIDE DOWN)

(5) Remove the reverse clutch pack (two fibers/one steel) (Fig. 245).

NOTE: Tag reverse clutch pack for reassembly identification.

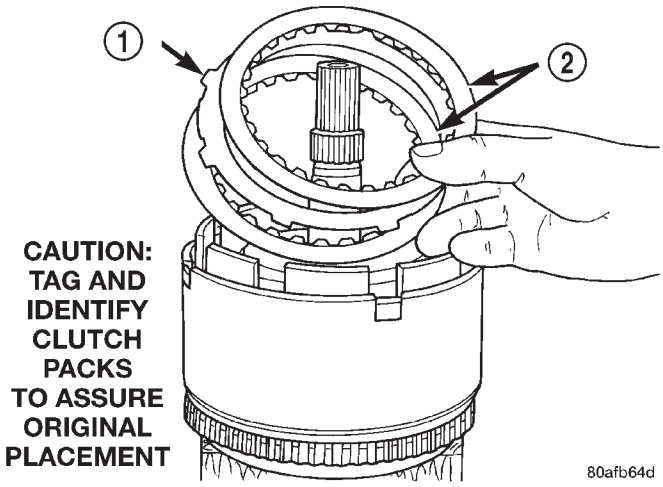

Fig. 245 Reverse Clutch Pack

1 – REVERSE CLUTCH PLATE
2 – REVERSE CLUTCH DISC

DISASSEMBLY AND ASSEMBLY (Continued)

(6) Remove the OD/Reverse reaction plate snap ring (Fig. 246).

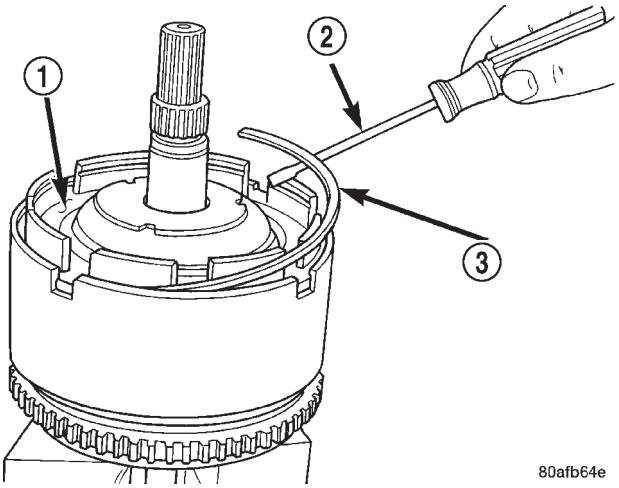

Fig. 246 OD/Reverse Reaction Plate Snap Ring

1 – OD/REVERSE PRESSURE PLATE
2 – SCREWDRIVER
3 – OD/REVERSE PRESSURE PLATE SNAP RING

(7) Remove OD/Reverse reaction plate (Fig. 247).

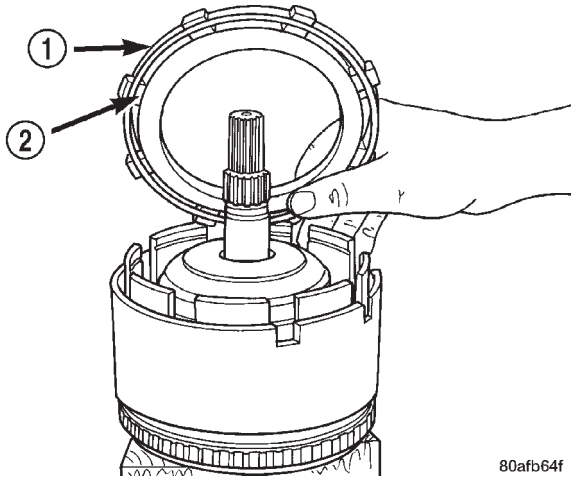

Fig. 247 OD/Reverse Reaction Plate

1 – OD/REVERSE PRESSURE PLATE
2 – (STEP SIDE DOWN)

(8) Remove OD/Reverse reaction plate wave snap ring (Fig. 248).

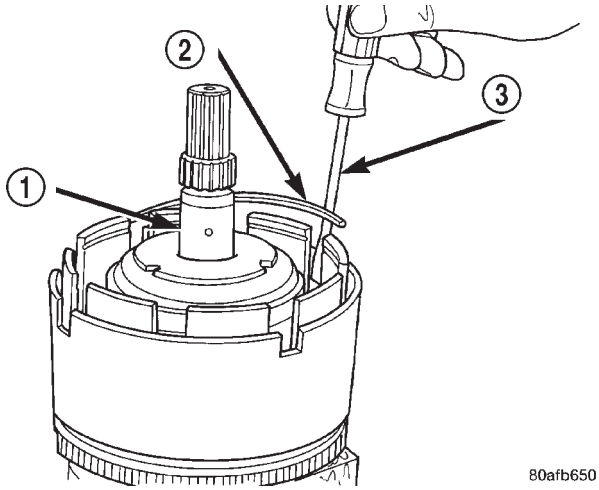

Fig. 248 Waved Snap Ring

1 – OVERDRIVE SHAFT ASSEMBLY
2 – OD/REVERSE CLUTCH WAVED SNAP RING
3 – SCREWDRIVER

(9) Remove OD shaft/hub and OD clutch pack (Fig. 249) (Fig. 250).

NOTE: Tag overdrive clutch pack for reassembly identification.

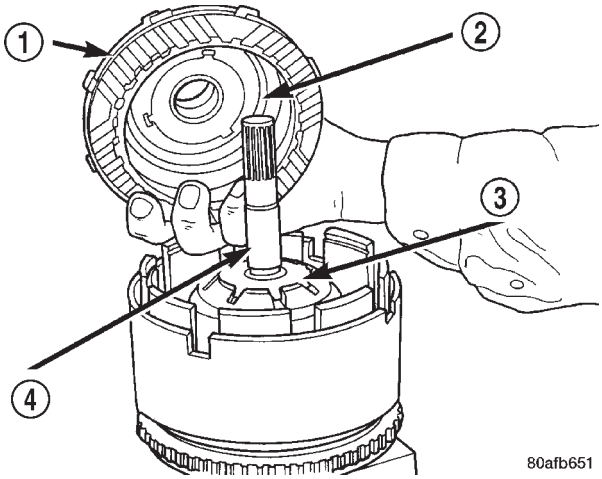

Fig. 249 Remove OD Clutch Pack

1 – OVERDRIVE SHAFT ASSEMBLY AND OD CLUTCH PACK
2 – #3 THRUST PLATE
3 – #3 THRUST WASHER
4 – UNDERDRIVE SHAFT ASSEMBLY

DISASSEMBLY AND ASSEMBLY (Continued)

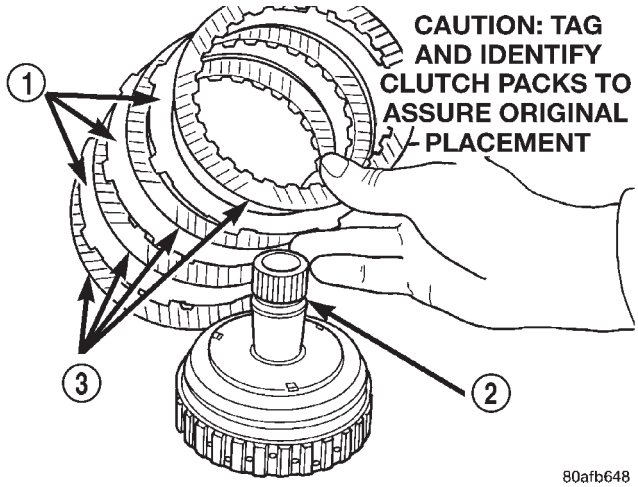

Fig. 250 Overdrive Clutch Pack

1 – OVERDRIVE CLUTCH PLATE
2 – OVERDRIVE SHAFT ASSEMBLY
3 – OVERDRIVE CLUTCH DISC

(10) Remove and inspect #3 & #4 thrust washers (Fig. 251).

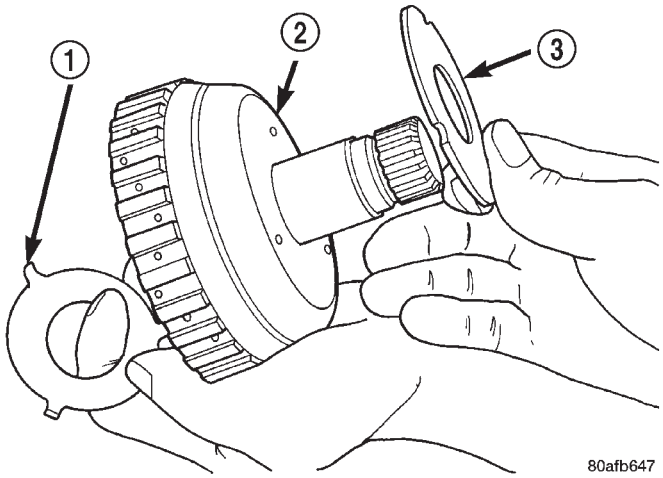

Fig. 251 #3&4 Thrust Washers

1 – #3 THRUST PLATE (3 TABS)
2 – OD SHAFT ASSEMBLY
3 – #4 THRUST PLATE (3 SLOTS)

(11) Remove the underdrive shaft assembly (Fig. 252).

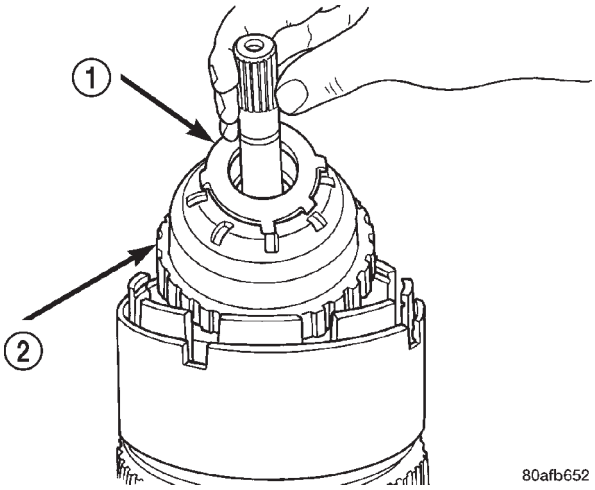

Fig. 252 Underdrive Shaft Assembly

1 – #3 THRUST WASHER (5 TABS)
2 – UNDERDRIVE SHAFT ASSEMBLY

(12) Remove the #2 needle bearing (Fig. 253).

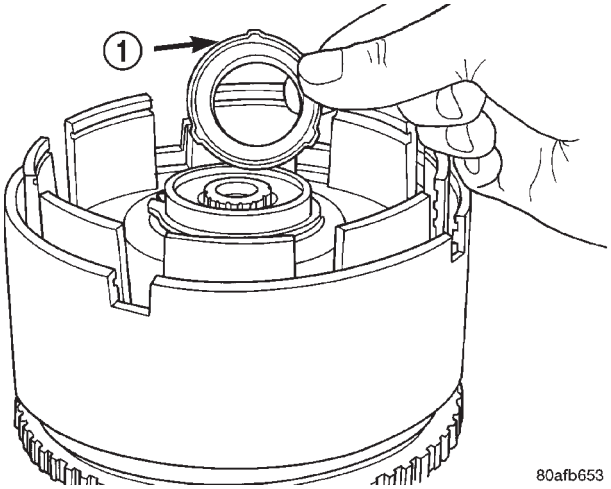

Fig. 253 No. 2 Needle Bearing

1 – #2 NEEDLE BEARING (NOTE 3 TABS)

DISASSEMBLY AND ASSEMBLY (Continued)

(13) Remove the OD/UD reaction plate tapered snap ring (Fig. 254).

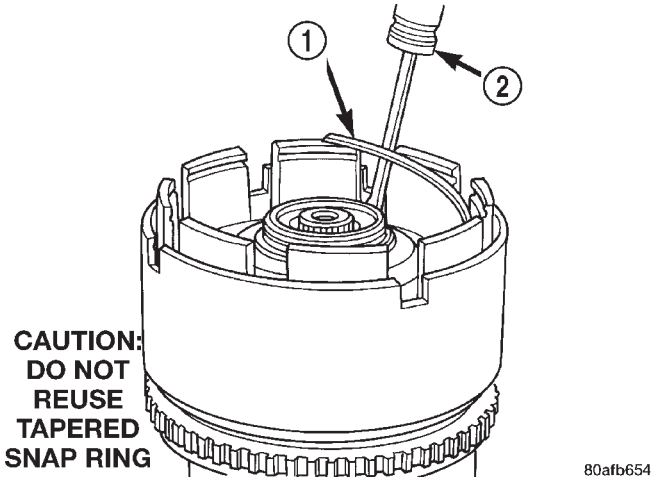

Fig. 254 OD/UD Reaction Plate Tapered Snap Ring

1 – OVERDRIVE/UNDERDRIVE CLUTCHES REACTION PLATE TAPERED SNAP RING
2 – SCREWDRIVER (DO NOT SCRATCH REACTION PLATE)

NOTE: The OD/UD clutch reaction plate has a step on both sides. Install the OD/UD clutches reaction plate tapered step side up.

(14) Remove the OD/UD reaction plate (Fig. 255).

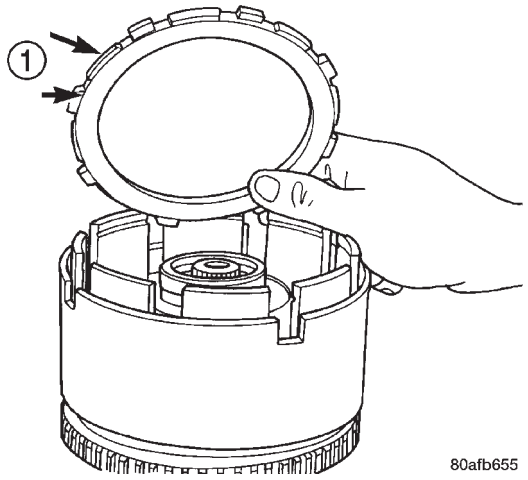

Fig. 255 OD/UD Reaction Plate

1 – OD/UD CLUTCH REACTION PLATE (STEP SIDE DOWN)

(15) Remove the first UD clutch disc (Fig. 256).

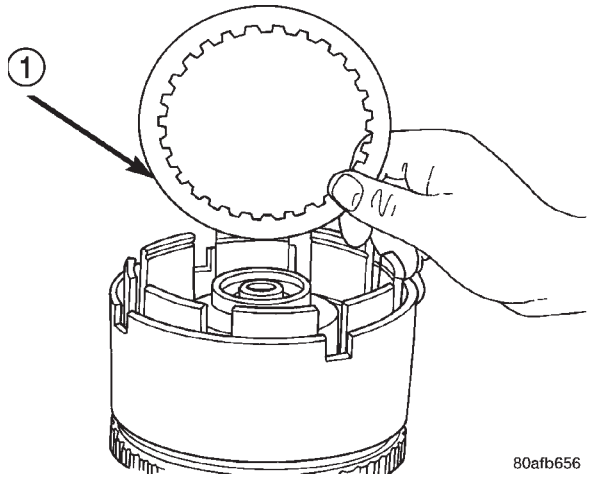

Fig. 256 Remove One UD Clutch Disc

1 – ONE UNDERDRIVE CLUTCH DISC

(16) Remove the UD clutch flat snap ring (Fig. 257).

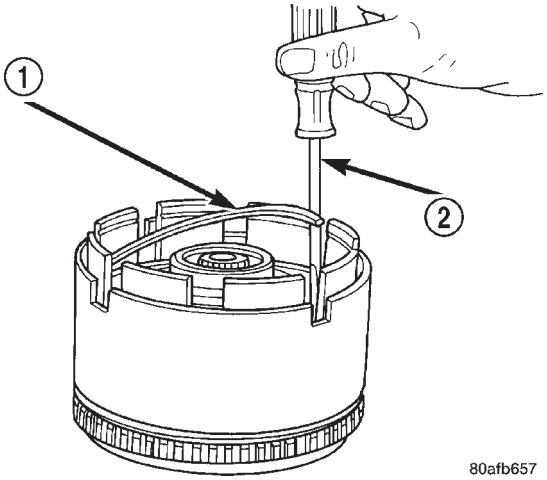

Fig. 257 UD Clutch Flat Snap Ring

1 – UNDERDRIVE CLUTCH REACTION PLATE FLAT SNAP RING
2 – SCREWDRIVER

NOTE: Tag underdrive clutch pack for reassembly identification.

DISASSEMBLY AND ASSEMBLY (Continued)

(17) Remove the UD clutch pack (Fig. 258).

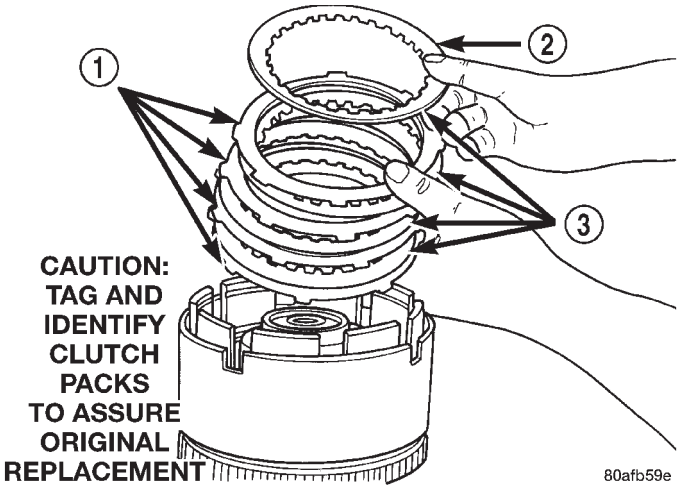

Fig. 258 Underdrive Clutch Pack

1 – CLUTCH PLATE
2 – ONE UD CLUTCH DISC
3 – CLUTCH DISC

CAUTION: Compress return spring just enough to remove or install snap ring.

(18) Using Tool 5059A and an arbor press, compress UD clutch piston enough to remove snap ring (Fig. 259) (Fig. 260).

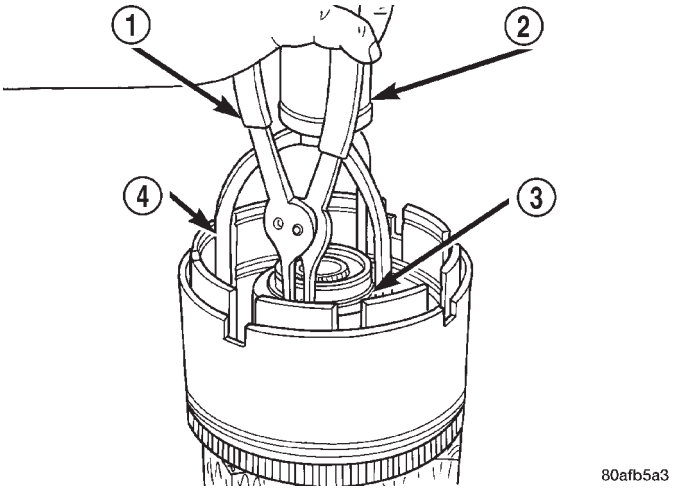

Fig. 259 UD Spring Retainer Snap Ring

1 – SNAP RING PLIERS
2 – ARBOR PRESS RAM
3 – SNAP RING
4 – SPECIAL TOOL 5059A

(19) Remove spring retainer (Fig. 260).

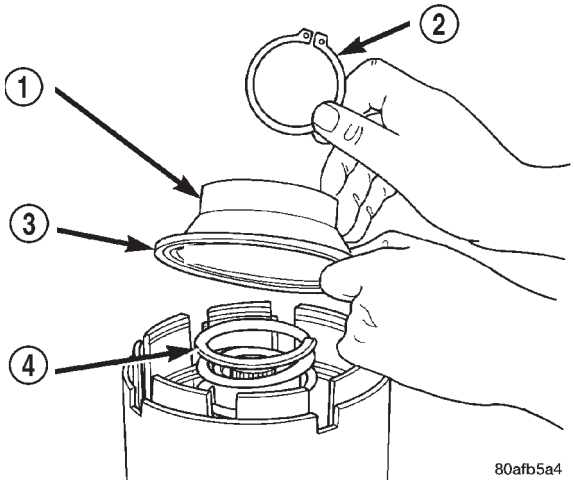

Fig. 260 UD Return Spring and Retainer

1 – UNDERDRIVE SPRING RETAINER
2 – SNAP RING
3 – SEAL
4 – PISTON RETURN SPRING

(20) Remove UD clutch piston (Fig. 261).

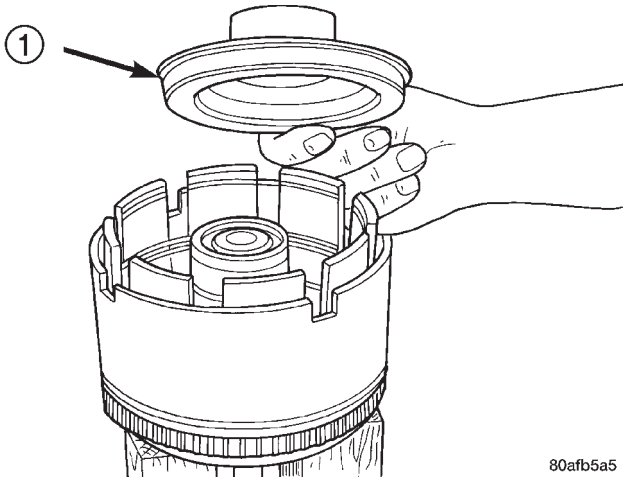

Fig. 261 Underdrive Clutch Piston

1 – PISTON

DISASSEMBLY AND ASSEMBLY (Continued)

(21) Remove input hub tapered snap ring (Fig. 262).

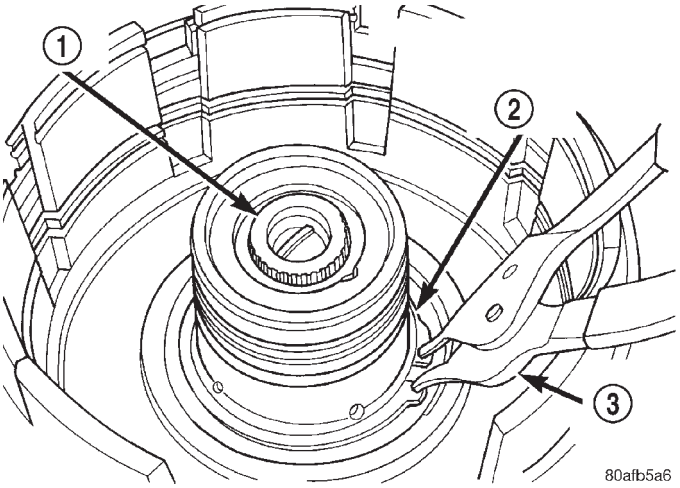

Fig. 262 Input Hub Tapered Snap Ring

1 – INPUT SHAFT
2 – INPUT HUB SNAP RING (TAPERED SIDE UP WITH TABS IN CAVITY)
3 – SNAP RING PLIERS

(22) Tap on input hub with soft faced hammer and separate input hub from OD/Reverse piston and clutch retainer (Fig. 263) (Fig. 264).

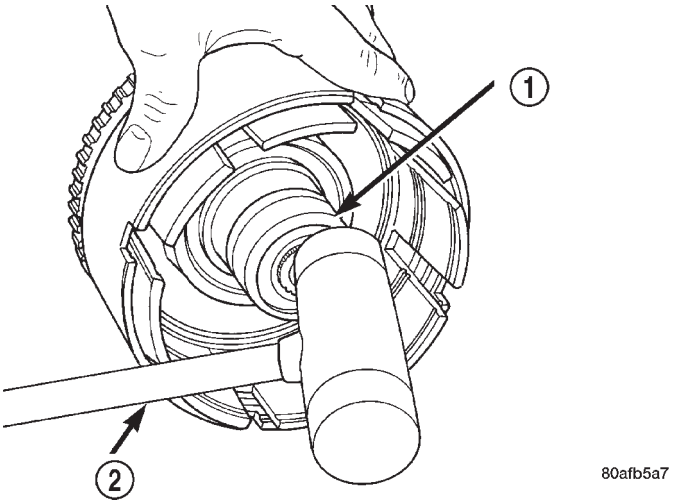

Fig. 263 Tap on Input Hub

1 – INPUT SHAFT AND HUB ASSEMBLY
2 – PLASTIC HAMMER

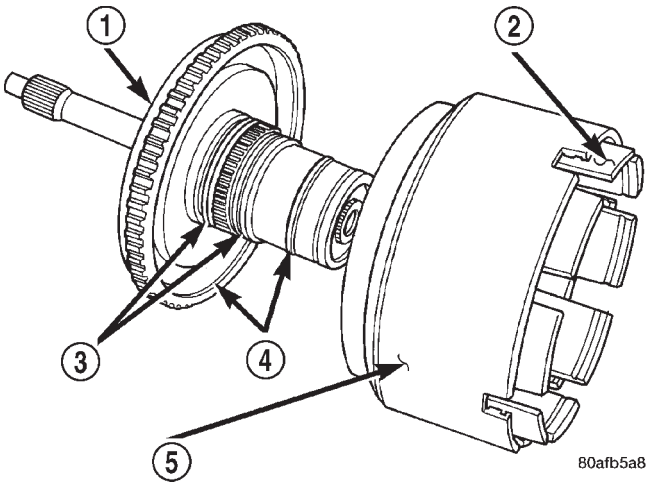

Fig. 264 Input Hub Removed

1 – INPUT SHAFT AND HUB ASSEMBLY
2 – INPUT CLUTCHES RETAINER
3 – O-RING
4 – SEAL
5 – OVERDRIVE/REVERSE PISTON

(23) Separate clutch retainer from OD/Reverse piston (Fig. 265).

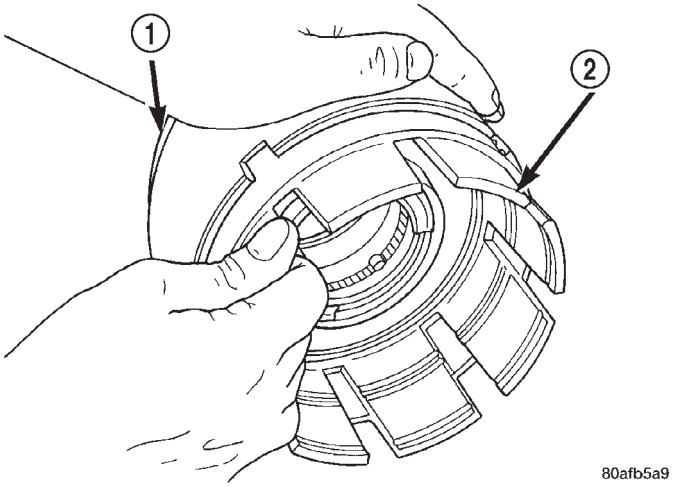

Fig. 265 Pull Retainer from Piston

1 – OVERDRIVE/REVERSE PISTON
2 – INPUT CLUTCHES RETAINER

DISASSEMBLY AND ASSEMBLY (Continued)

(24) Using Tool 6057 and an arbor press, compress return OD/Reverse piston return spring just enough to remove snap ring (Fig. 266) (Fig. 267).

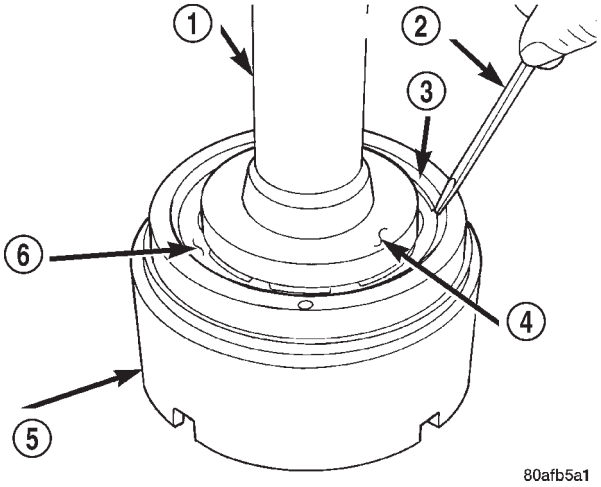

Fig. 266 Remove Snap Ring

1 – ARBOR PRESS RAM (COMPRESS RETURN SPRING JUST ENOUGH TO REMOVE OR INSTALL SNAP RING)
2 – SCREWDRIVER
3 – SNAP RING
4 – SPECIAL TOOL 6057
5 – OD/REVERSE PISTON
6 – RETURN SPRING

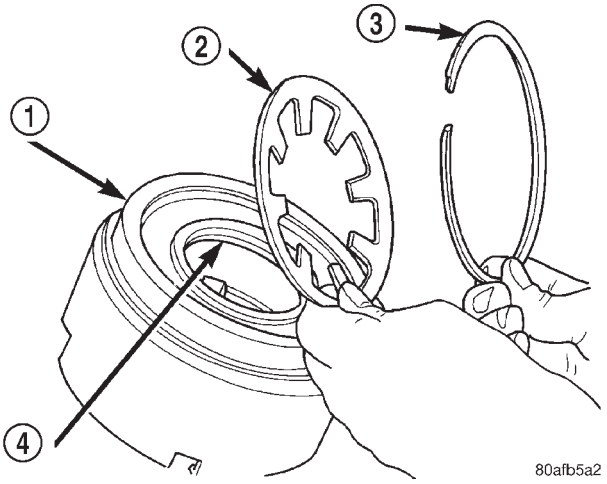

Fig. 267 Snap Ring and Return Spring

1 – OD/REVERSE PISTON
2 – RETURN SPRING
3 – SNAP RING
4 – O-RING

(25) Remove input shaft to input clutch hub snap ring (Fig. 268).

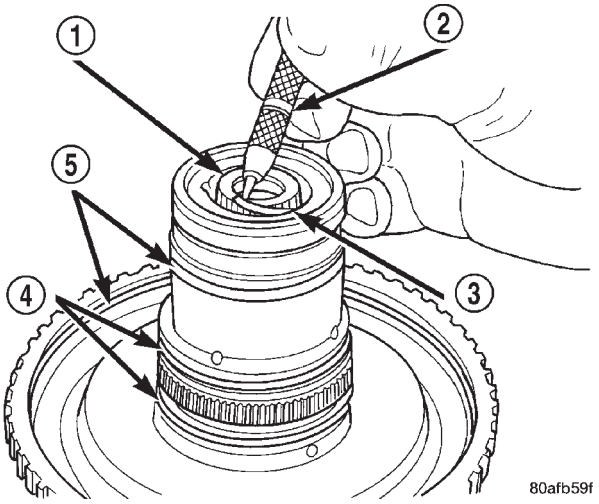

Fig. 268 Remove Input Shaft Snap Ring

1 – INPUT SHAFT
2 – SHARP-POINTED TOOL
3 – SNAP RING
4 – O-RINGS
5 – SEALS

(26) Using a suitably sized socket and an arbor press, remove input shaft from input shaft hub (Fig. 269).

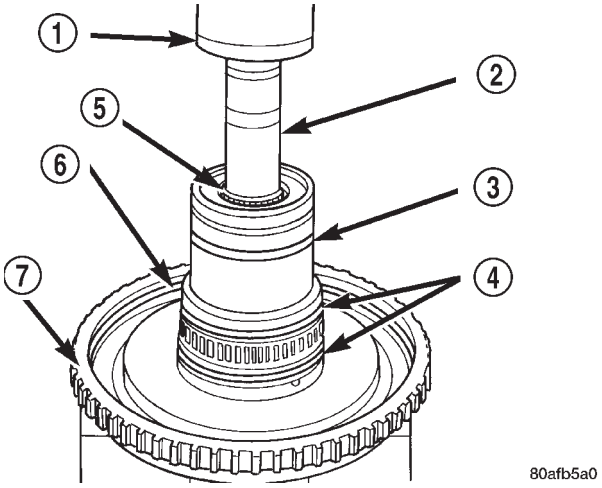

Fig. 269 Remove Input Shaft

1 – ARBOR PRESS RAM
2 – SOCKET
3 – SEAL
4 – O-RINGS
5 – INPUT SHAFT
6 – SEAL
7 – INPUT SHAFT HUB ASSEMBLY

DISASSEMBLY AND ASSEMBLY (Continued)

ASSEMBLY

Use petrolatum on all seals to ease assembly of components.

(1) Using an arbor press, install input shaft to input shaft hub (Fig. 270).

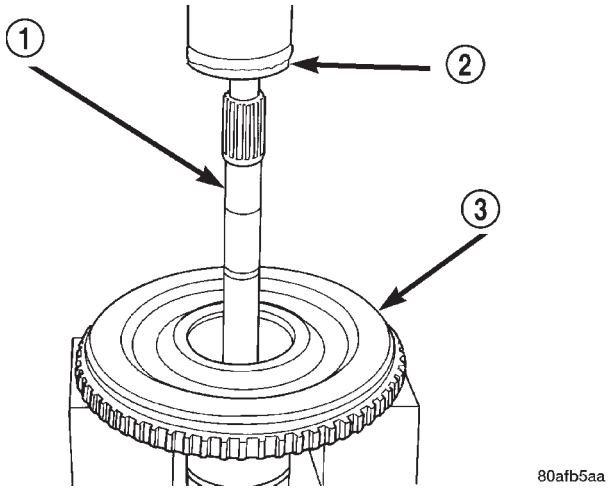

Fig. 270 Install Input Shaft

1 – INPUT SHAFT
2 – ARBOR PRESS RAM
3 – INPUT SHAFT HUB ASSEMBLY

(2) Install input shaft snap ring (Fig. 271).

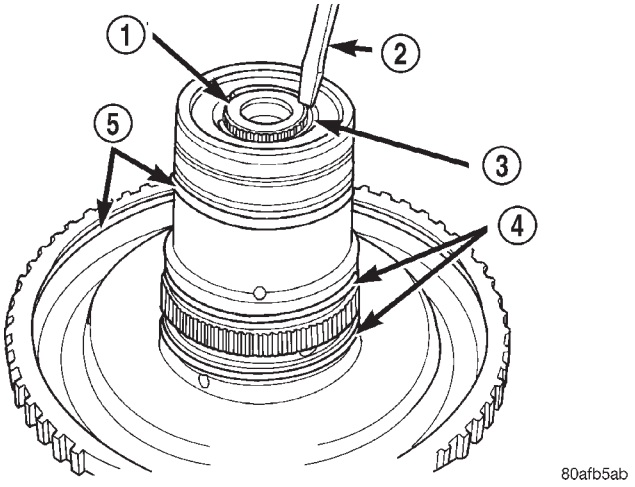

Fig. 271 Install Input Shaft Snap Ring

1 – INPUT SHAFT
2 – SCREWDRIVER (DO NOT SCRATCH BEARING SURFACE)
3 – SNAP RING
4 – O-RINGS
5 – SEALS

(3) Using an arbor press and Tool 6057, Install OD/Reverse piston return spring and snap ring (Fig. 272) (Fig. 273).

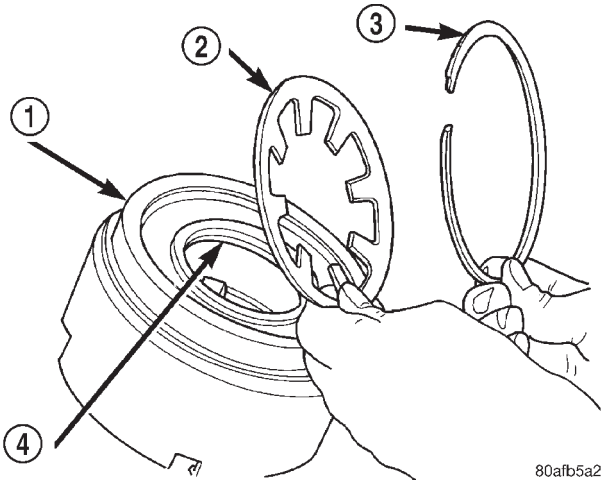

Fig. 272 Return Spring and Snap Ring

1 – OD/REVERSE PISTON
2 – RETURN SPRING
3 – SNAP RING
4 – O-RING

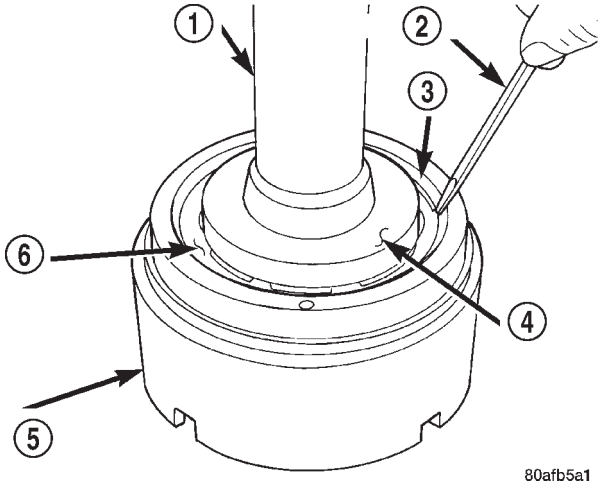

Fig. 273 Install Snap Ring

1 – ARBOR PRESS RAM (COMPRESS RETURN SPRING JUST ENOUGH TO REMOVE OR INSTALL SNAP RING)
2 – SCREWDRIVER
3 – SNAP RING
4 – SPECIAL TOOL 6057
5 – OD/REVERSE PISTON
6 – RETURN SPRING

DISASSEMBLY AND ASSEMBLY (Continued)

(4) Install the OD/Reverse piston assembly to the input clutch retainer as shown in (Fig. 274).

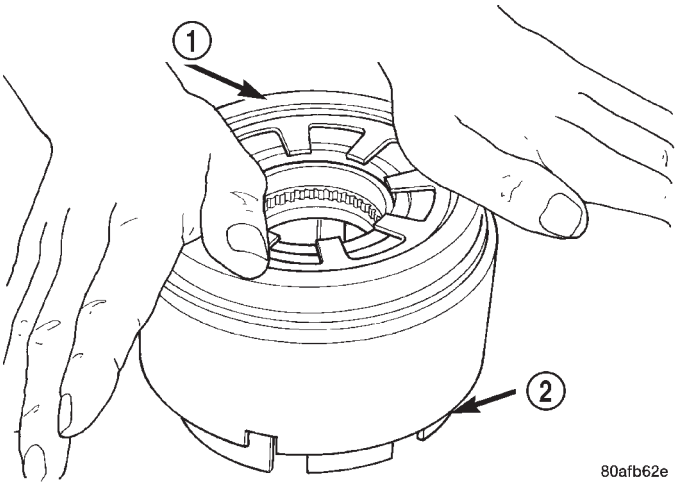

Fig. 274 Install OD/Reverse Piston

1 – PUSH DOWN TO INSTALL OVERDRIVE/REVERSE PISTON
2 – INPUT CLUTCHES RETAINER

(5) Install the input hub/shaft assy. to the OD/Reverse piston/clutch retainer assy. (Fig. 275).

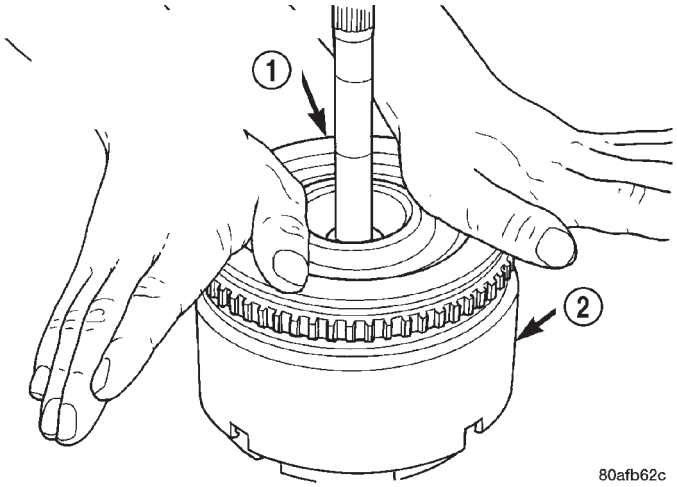

Fig. 275 Install Input Shaft Hub Assembly

1 – PUSH DOWN TO INSTALL INPUT SHAFT HUB ASSEMBLY (ROTATE TO ALIGN SPLINES)
2 – OD/REV. PISTON

(6) Install input hub tapered snap ring (Fig. 276).

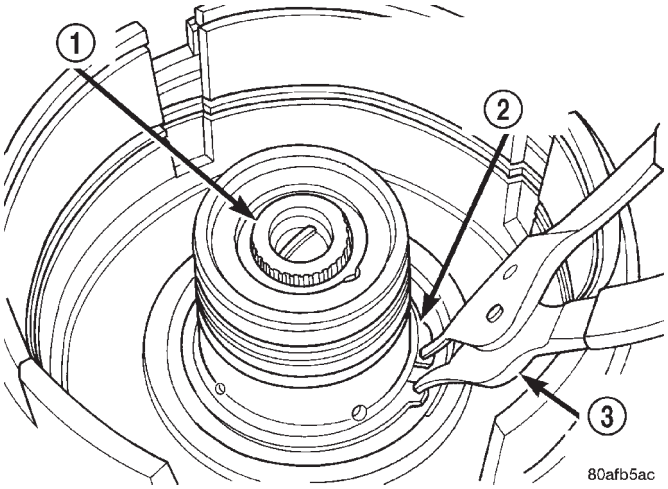

Fig. 276 Install Input Hub Tapered Snap Ring

1 – INPUT SHAFT
2 – INPUT HUB SNAP RING (TAPERED SIDE UP WITH TABS IN CAVITY)
3 – SNAP RING PLIERS

(7) Install UD clutch piston (Fig. 277).

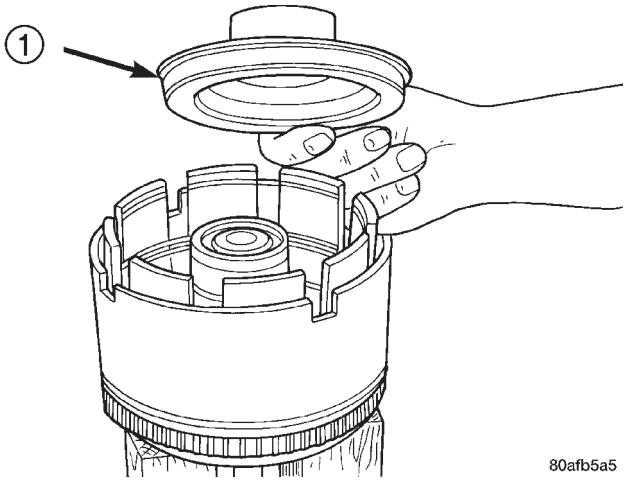

Fig. 277 Underdrive Clutch Piston

1 – PISTON

DISASSEMBLY AND ASSEMBLY (Continued)

(8) Install UD piston return spring and Tool 5067 as shown in (Fig. 278).

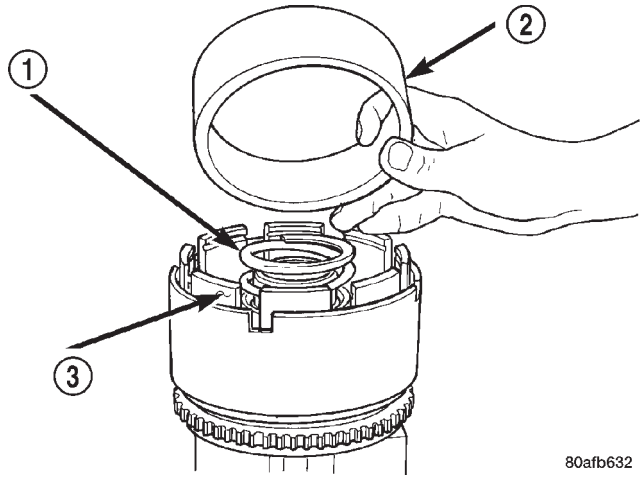

Fig. 278 Seal Compressor Special Tool 5067

1 – PISTON RETURN SPRING
2 – SPECIAL TOOL 5067
3 – INPUT SHAFT CLUTCHES RETAINER ASSEMBLY

(9) Using Tool 5059A and an arbor press, Install the UD spring retainer and snap ring. (Fig. 279) (Fig. 280) Compress just enough to install snap ring.

CAUTION: Compress return spring just enough to install snap ring.

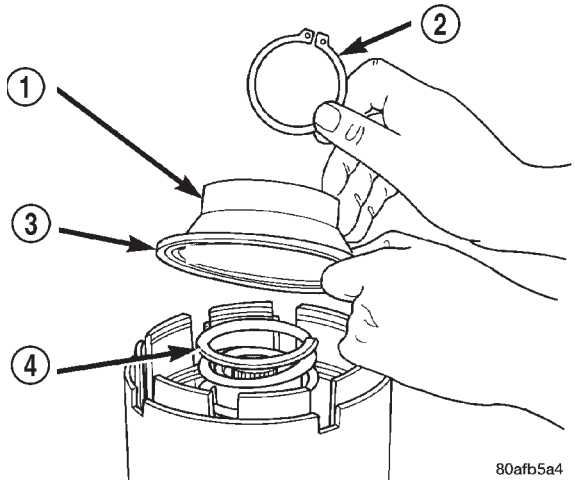

Fig. 279 UD Return Spring and Retainer

1 – UNDERDRIVE SPRING RETAINER
2 – SNAP RING
3 – SEAL
4 – PISTON RETURN SPRING

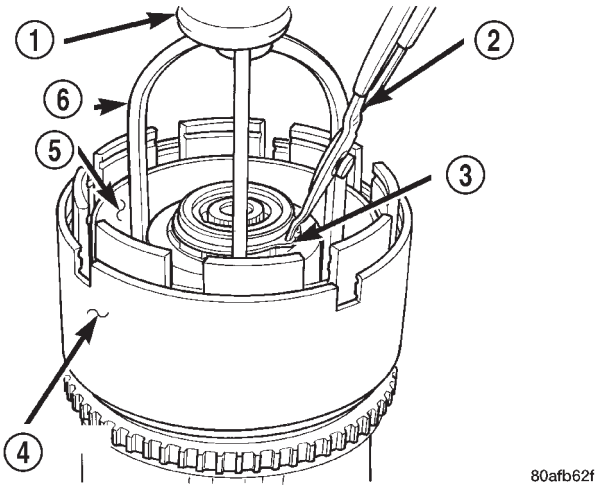

Fig. 280 Install UD Spring Retainer and Snap Ring

1 – ARBOR PRESS RAM
2 – SNAP RING PLIERS
3 – SNAP RING
4 – OD/REVERSE PISTON
5 – TOOL 5067
6 – TOOL 5059A

(10) Install the UD clutch pack (four frictions/four steels) (Fig. 281).

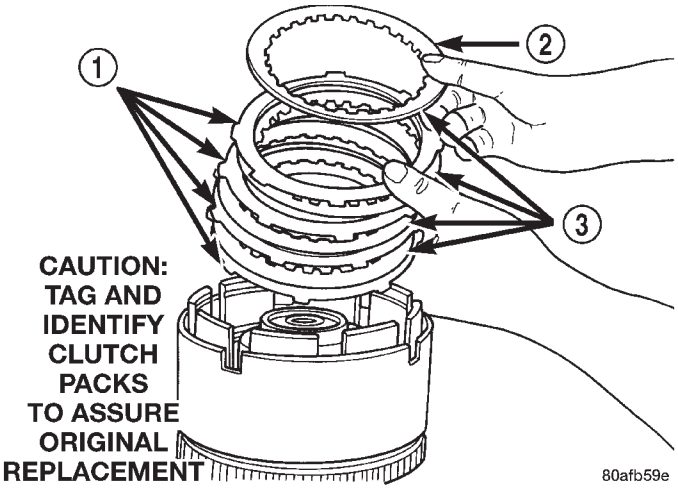

Fig. 281 Underdrive Clutch Pack

1 – CLUTCH PLATE
2 – ONE UD CLUTCH DISC
3 – CLUTCH DISC

DISASSEMBLY AND ASSEMBLY (Continued)

(11) Install the UD clutch flat snap ring (Fig. 282).

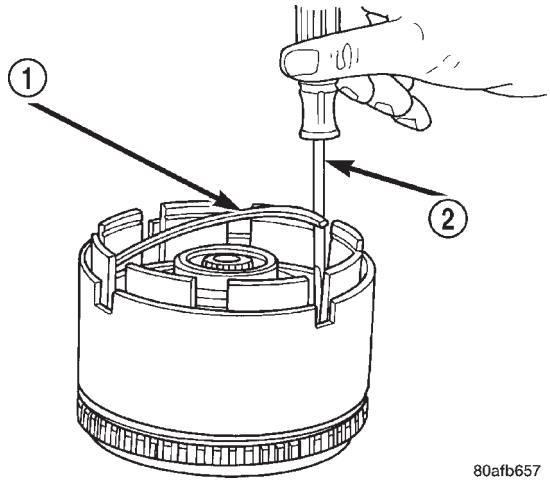

Fig. 282 UD Clutch Flat Snap Ring

1 – UNDERDRIVE CLUTCH REACTION PLATE FLAT SNAP RING
2 – SCREWDRIVER

(12) Install the last UD clutch disc (Fig. 283).

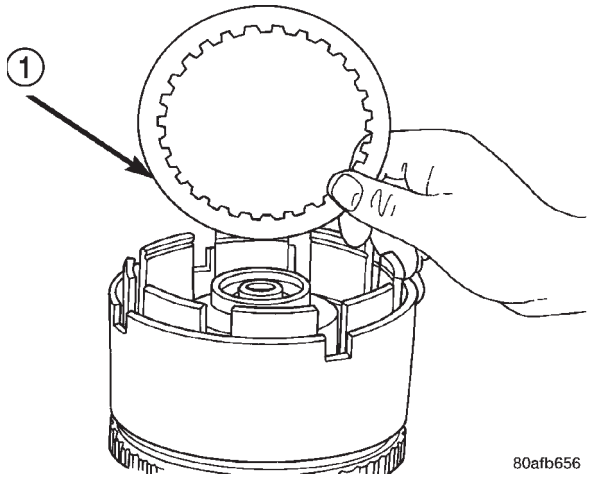

Fig. 283 Install Last UD Clutch Disc

1 – ONE UNDERDRIVE CLUTCH DISC

(13) Install the OD/UD clutch reaction plate and snap ring (Fig. 284) (Fig. 285). The OD/UD clutches reaction plate has a step on both sides. Install the OD/UD clutches reaction plate tapered step side up.

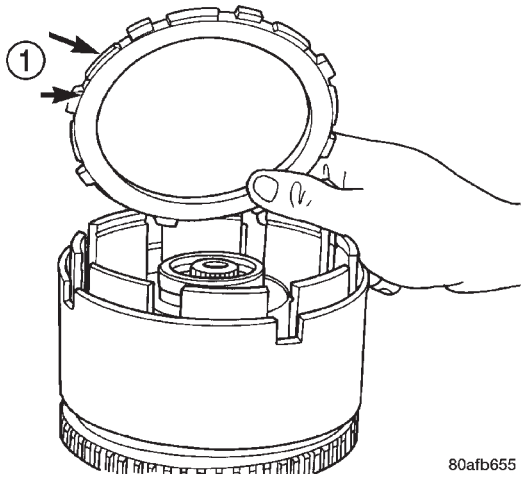

Fig. 284 OD/UD Reaction Plate

1 – OD/UD CLUTCH REACTION PLATE (STEP SIDE DOWN)

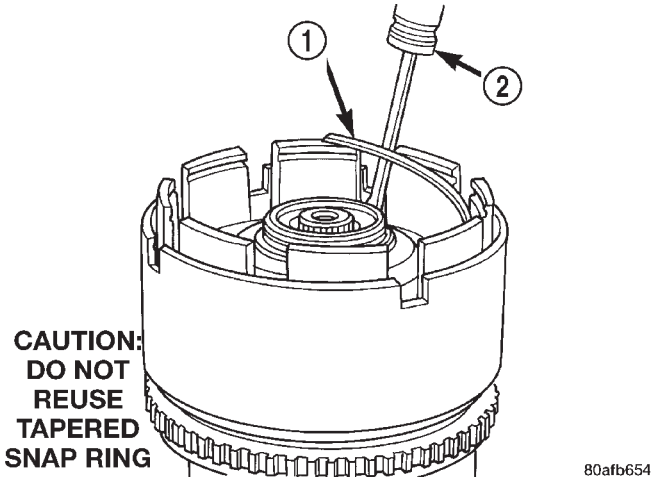

Fig. 285 Tapered Snap Ring

1 – OVERDRIVE/UNDERDRIVE CLUTCHES REACTION PLATE TAPERED SNAP RING
2 – SCREWDRIVER (DO NOT SCRATCH REACTION PLATE)

NOTE: Snap ring ends must be located within one finger of the input clutch hub. Be sure that snap ring is fully seated, by pushing with screwdriver, into snap ring groove all the way around.

DISASSEMBLY AND ASSEMBLY (Continued)

(14) Seat tapered snap ring to ensure proper installation (Fig. 286).

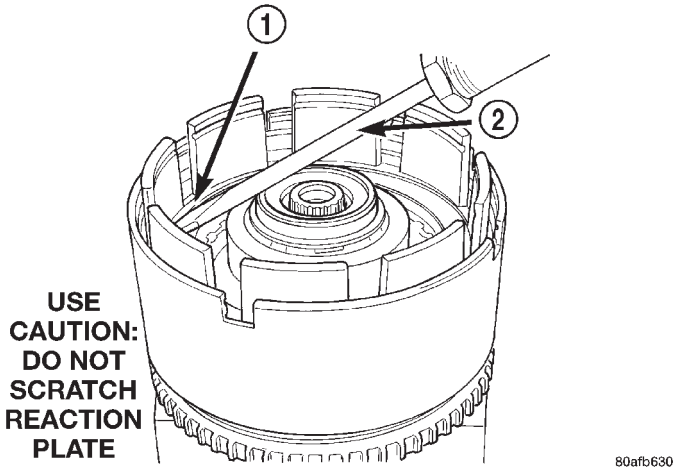

Fig. 286 Seating Tapered Snap Ring

1 – OVERDRIVE/UNDERDRIVE CLUTCHES REACTION PLATE TAPERED SNAP RING
2 – SCREWDRIVER

(15) Install input clutch assembly to the Input Clutch Pressure Fixture–Tool 8391 (Fig. 287).

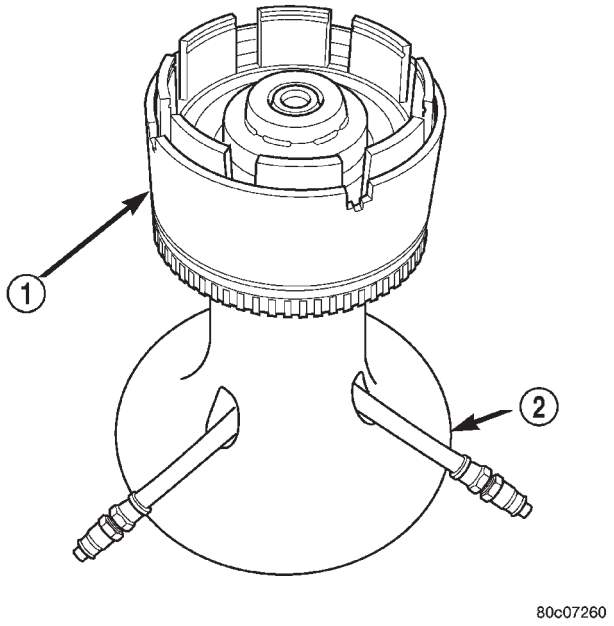

Fig. 287 Input Clutch Assembly on Pressure Fixture Tool 8391

1 – INPUT CLUTCHES ASSEMBLY
2 – INPUT CLUTCH PRESSURE FIXTURE 8391

(16) Set up dial indicator on the UD clutch pack as shown in (Fig. 288).

(17) Using moderate pressure, press down and hold (near indicator) the UD clutch pack with screwdriver or suitable tool and zero dial indicator (Fig. 289). When releasing pressure on clutch pack, indicator reading should advance 0.005–0.010.

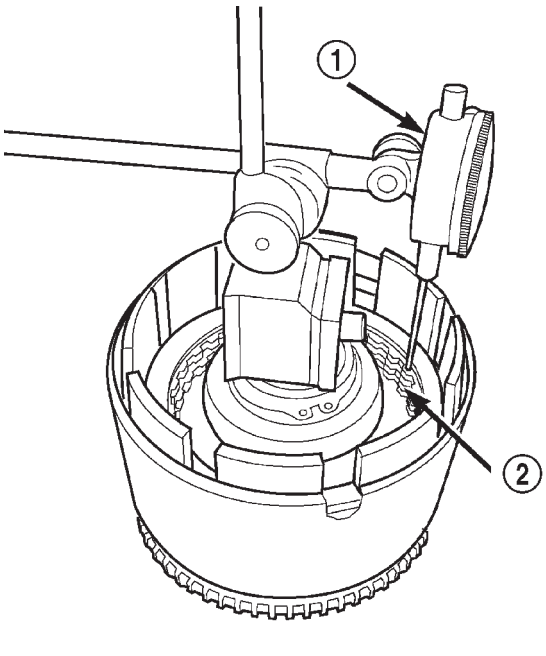

Fig. 288 Set Up Dial Indicator to Measure UD Clutch Clearance

1 – DIAL INDICATOR
2 – UNDERDRIVE CLUTCH

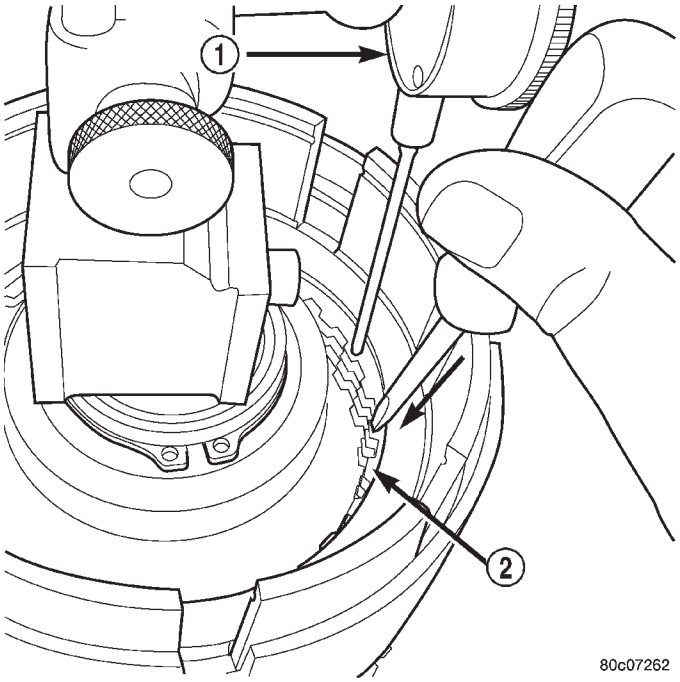

Fig. 289 Press Down on UD Clutch Pack and Zero Dial Indicator

1 – DIAL INDICATOR
2 – UNDERDRIVE CLUTCH

DISASSEMBLY AND ASSEMBLY (Continued)

CAUTION: Do not apply more than 30 psi (206 kPa) to the underdrive clutch pack.

(18) Apply 30 psi (206 kPa) to the underdrive hose on Tool 8391 and measure UD clutch clearance. Measure and record UD clutch pack measurement in four (4) places, 90° apart.

(19) Take average of four measurements and compare with UD clutch pack clearance specification. **Underdrive clutch pack clearance must be 0.94-1.50 mm (0.037-0.059 in.).**

(20) If necessary, select the proper reaction plate to achieve specifications:

UNDERDRIVE REACTION PLATE THICKNESS	
4659939AB	5.837-5.937 mm (0.230-0.234 in.)
4659940AB	6.147-6.248 mm (0.242-0.246 in.)
4659941AB	6.457-6.557 mm (0.254-0.258 in.)

(21) Install the OD clutch pack (four frictions/three steels) (Fig. 290).

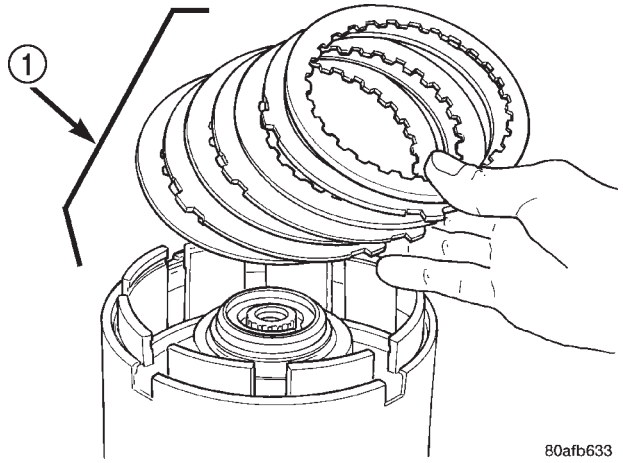

Fig. 290 Install OD Clutch Pack

1 – OVERDRIVE CLUTCH PACK

(22) Install OD reaction plate waved snap ring (Fig. 291).

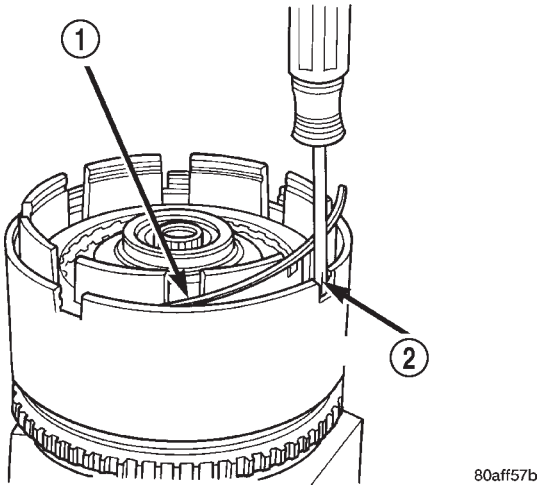

Fig. 291 Install Waved Snap Ring

1 – OVERDRIVE REACTION PLATE WAVED SNAP RING
2 – SCREWDRIVER

(23) Install the OD/Reverse reaction plate with large step down (towards OD clutch pack) (Fig. 292).

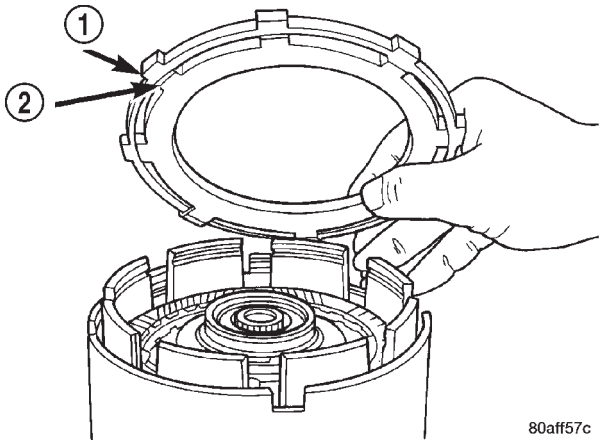

Fig. 292 OD/Reverse Reaction Plate

1 – OVERDRIVE/REVERSE PRESSURE PLATE
2 – (STEP SIDE DOWN)

DISASSEMBLY AND ASSEMBLY (Continued)

(24) Install OD reaction plate flat snap ring (Fig. 293).

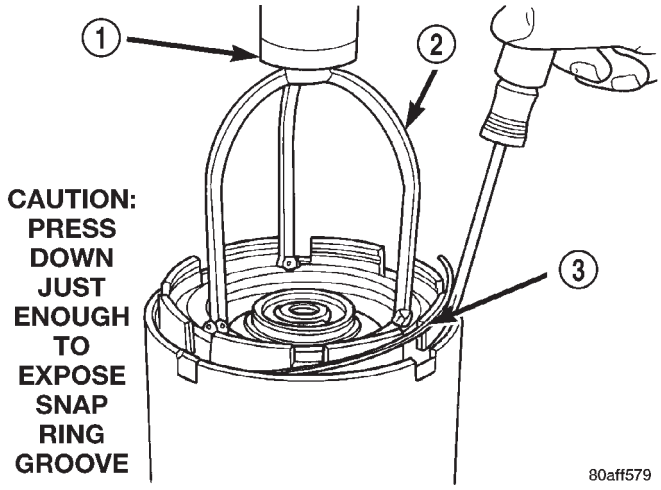

Fig. 293 Install Flat Snap Ring

1 – ARBOR PRESS RAM
2 – TOOL 5059A
3 – FLAT SNAP RING

(25) Measure OD clutch pack clearance. Set up dial indicator on top of the OD/Reverse reaction plate as shown in (Fig. 294).

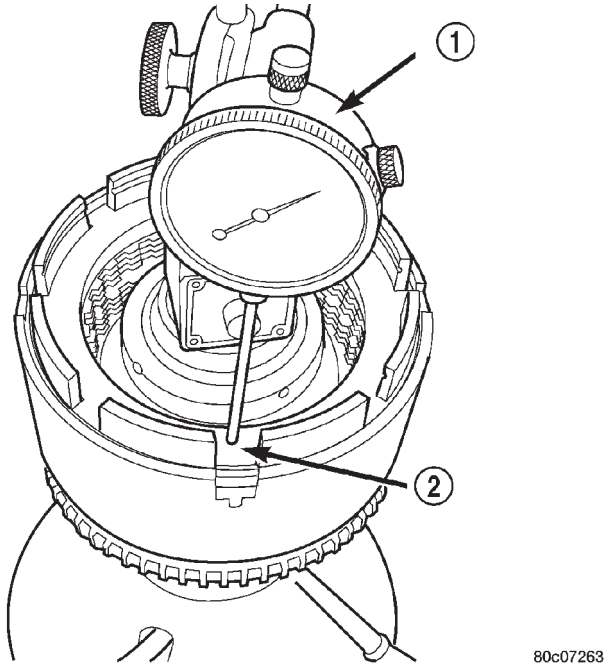

Fig. 294 Measure OD Clutch Pack Clearance

1 – DIAL INDICATOR
2 – OD/REVERSE REACTION PLATE

(26) Zero dial indicator and apply 30 psi (206 kPa) air pressure to the overdrive clutch hose on Tool 8391. Measure and record OD clutch pack measurement in four (4) places, 90° apart.

(27) Take average of four measurements and compare with OD clutch pack clearance specification. **The overdrive (OD) clutch pack clearance is 1.07-3.25 mm (0.042-0.128 in.).**

If not within specifications, the clutch is not assembled properly. There is no adjustment for the OD clutch clearance.

(28) Install reverse clutch pack (two frictions/one steel) (Fig. 295).

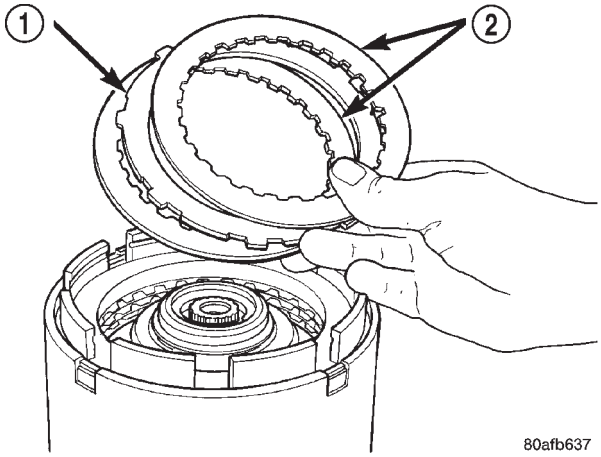

Fig. 295 Install Reverse Clutch Pack

1 – REVERSE CLUTCH PLATE
2 – REVERSE CLUTCH DISCS

(29) Install reverse clutch reaction plate with the flat side down towards reverse clutch (Fig. 296).

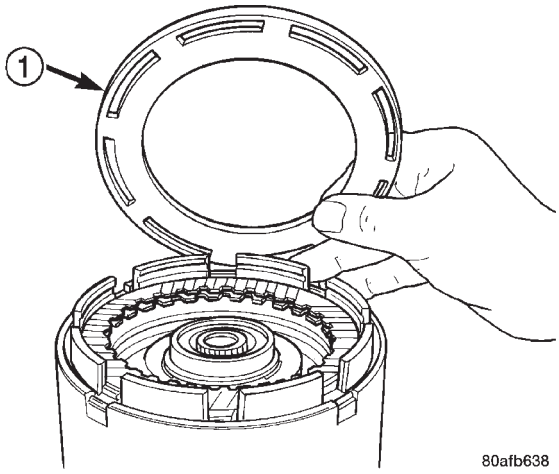

Fig. 296 Install Reaction Plate

1 – REVERSE CLUTCH REACTION PLATE (FLAT SIDE DOWN)

DISASSEMBLY AND ASSEMBLY (Continued)

(30) Tap reaction plate down to allow installation of the reverse clutch snap ring. Install reverse clutch snap ring (Fig. 297).

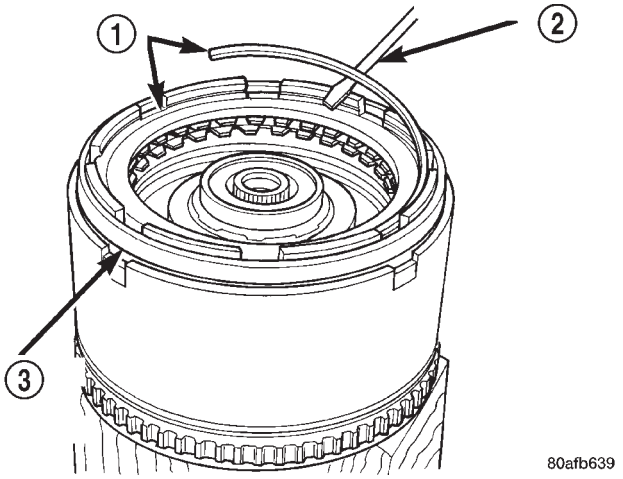

Fig. 297 Install Reverse Clutch Snap Ring

1 – REVERSE CLUTCH SNAP RING (SELECT)
2 – SCREWDRIVER
3 – REVERSE CLUTCH REACTION PLATE

(31) Pry up reverse reaction plate to seat against snap ring (Fig. 298).

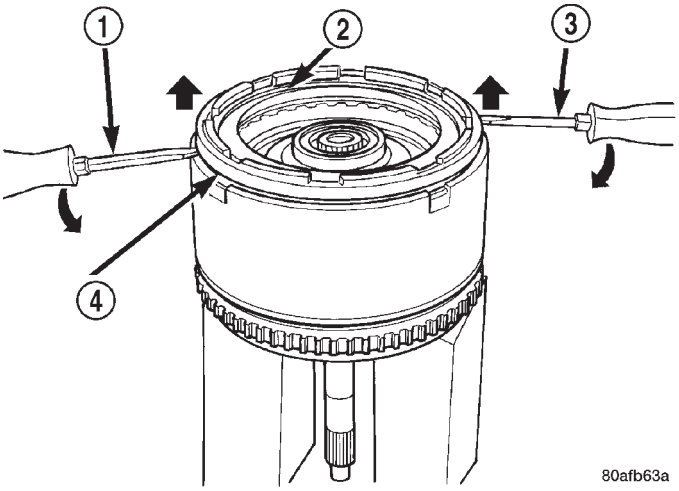

Fig. 298 Pry Up Reaction Plate to Seat Against Snap Ring

1 – SCREWDRIVER
2 – SNAP RING
3 – SCREWDRIVER
4 – MUST RAISE REVERSE REACTION PLATE TO RAISE SNAP RING

(32) Set up a dial indicator on the reverse clutch pack as shown in (Fig. 299).

(33) Using moderate pressure, press down and hold (near indicator) reverse clutch disc with screwdriver or suitable tool and zero dial indicator (Fig. 300). When releasing pressure, indicator should advance 0.005-0.010. as clutch pack relaxes.

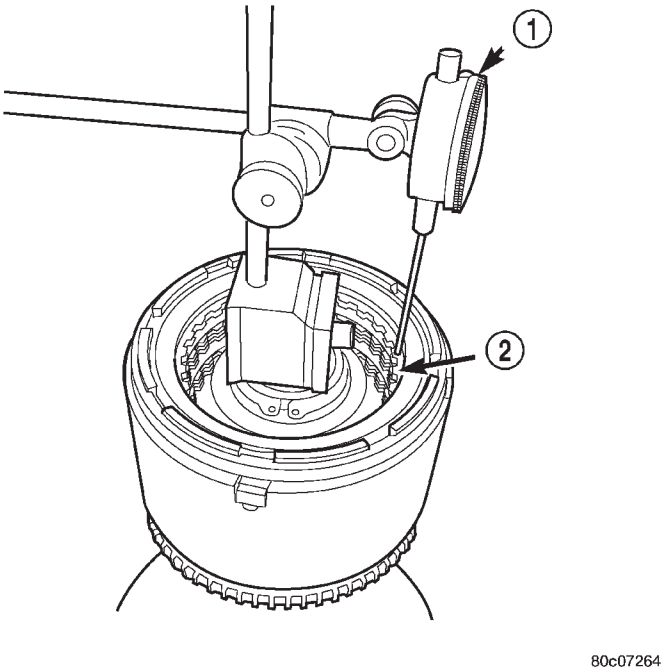

Fig. 299 Measure Reverse Clutch Pack Clearance

1 – DIAL INDICATOR
2 – REVERSE CLUTCH

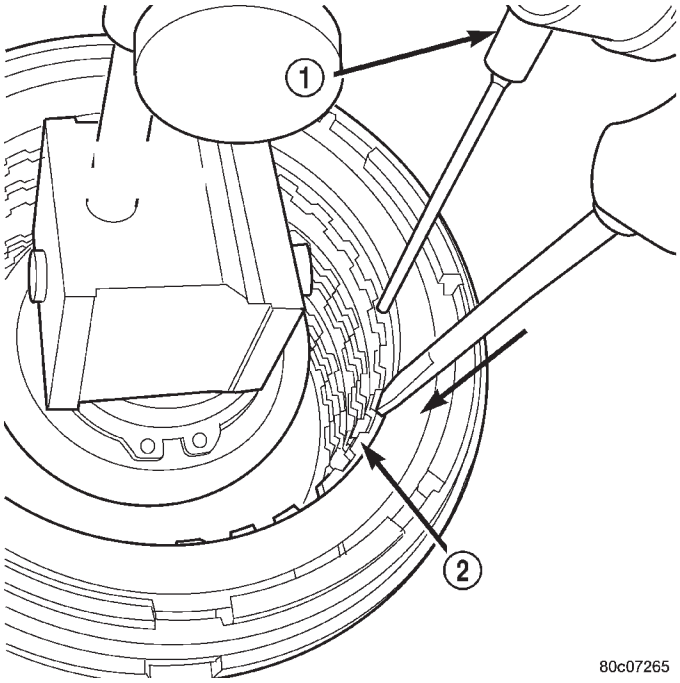

Fig. 300 Press Down on Reverse Clutch and Zero Indicator

1 – DIAL INDICATOR
2 – REVERSE CLUTCH

DISASSEMBLY AND ASSEMBLY (Continued)

(34) Apply 30 psi (206 kPa) air pressure to the reverse clutch hose on Tool 8391. Measure and record reverse clutch pack measurement in four (4) places, 90° apart.

(35) Take average of four measurements and compare with reverse clutch pack clearance specification. **The reverse clutch pack clearance is 0.89-1.37 mm (0.035-0.054 in.).** Select the proper reverse clutch snap ring to achieve specifications:

REVERSE CLUTCH SNAP RING THICKNESS	
4377195	1.53-1.58 mm (0.060-0.062 in.)
4412871	1.77-1.83 mm (0.070-0.072 in.)
4412872	2.02-2.07 mm (0.080-0.082 in.)
4412873	2.27-2.32 mm (0.090-0.091 in.)

(36) To complete the assembly, reverse clutch and overdrive clutch must be removed.

(37) Install the #2 needle bearing (Fig. 301).

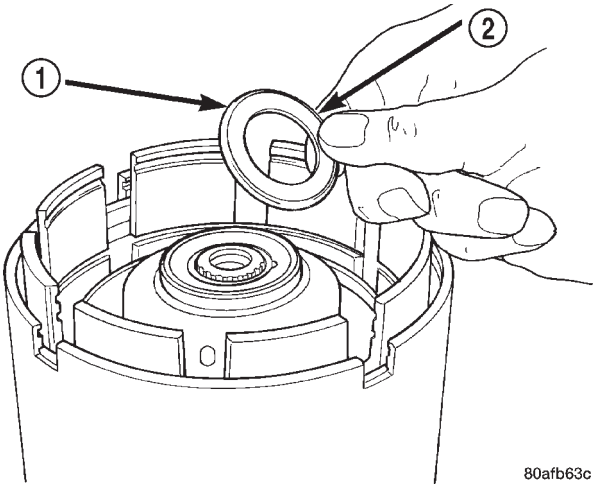

Fig. 301 Install No. 2 Needle Bearing

1 – #2 NEEDLE BEARING (NOTE 3 SMALL TABS)
2 – TABS UP

(38) Install the underdrive shaft assembly (Fig. 302).

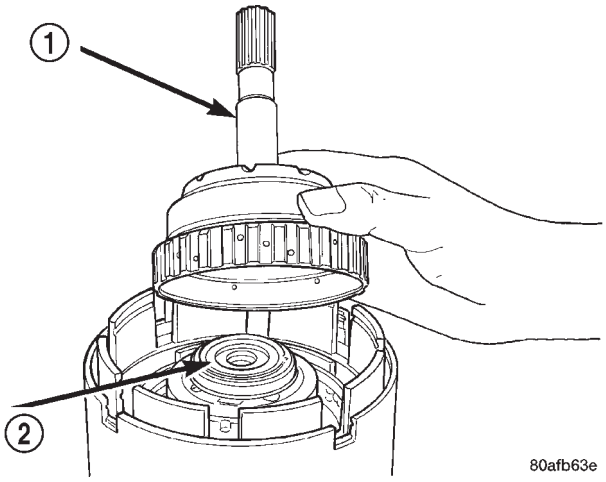

Fig. 302 Install Underdrive Shaft Assembly

1 – UNDERDRIVE SHAFT ASSEMBLY
2 – #2 NEEDLE BEARING

(39) Install the #3 thrust washer to the underdrive shaft assembly. Be sure five tabs are seated properly (Fig. 303).

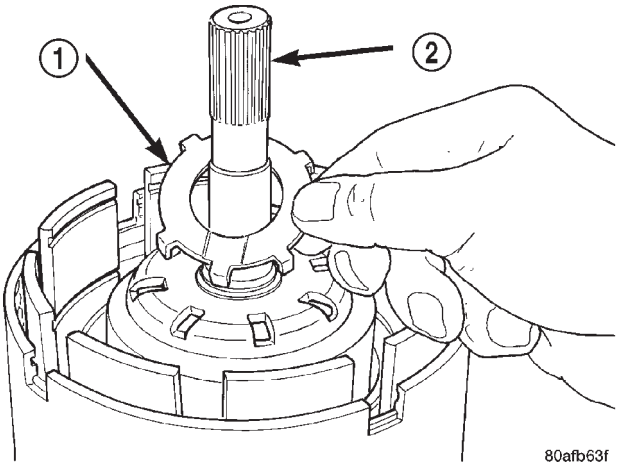

Fig. 303 Install No. 3 Thrust Washer

1 – #3 THRUST WASHER (NOTE 5 TABS)
2 – UNDERDRIVE SHAFT ASSEMBLY

DISASSEMBLY AND ASSEMBLY (Continued)

(40) Install the #3 thrust plate to the bottom of the overdrive shaft assembly. Retain with petrolatum or transmission assembly gel (Fig. 304).

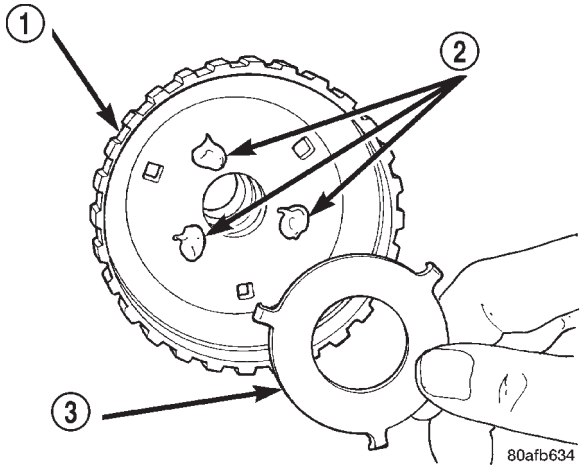

Fig. 304 Install No. 3 Thrust Plate

1 – OVERDRIVE SHAFT ASSEMBLY
2 – DABS OF PETROLATUM (FOR RETENTION)
3 – #3 THRUST PLATE (NOTE 3 TABS)

(41) Install the overdrive shaft assembly (Fig. 305).

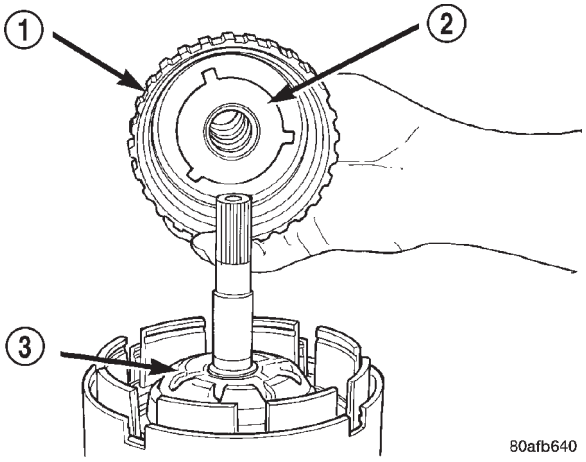

Fig. 305 Install Overdrive Shaft Assembly

1 – OVERDRIVE SHAFT ASSEMBLY
2 – #3 THRUST PLATE
3 – #3 THRUST WASHER

(42) Reinstall overdrive and reverse clutch as shown. **Rechecking these clutch clearances is not necessary.**

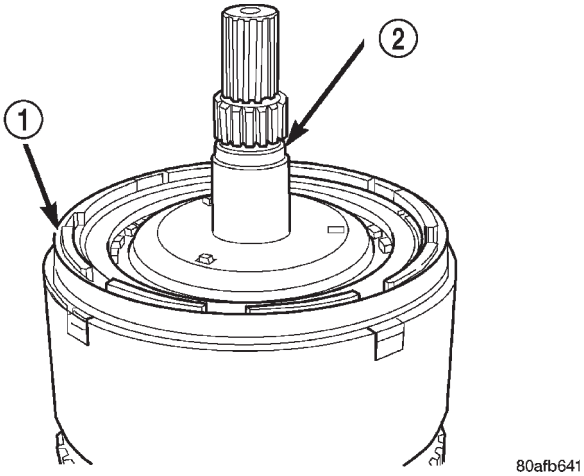

Fig. 306 Input Clutch Assembly

1 – INPUT CLUTCH ASSEMBLY
2 – OVERDRIVE SHAFT ASSEMBLY

TRANSAXLE—ASSEMBLY

To assemble the transaxle centerline, refer to the following procedures.

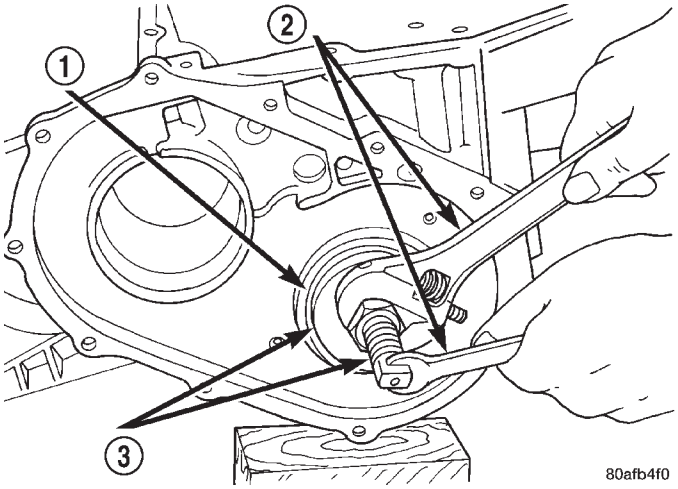

Fig. 307 Install Both Output Bearing Cups

1 – OUTPUT BEARING CUPS
2 – WRENCHES
3 – TOOL 5050

DISASSEMBLY AND ASSEMBLY (Continued)

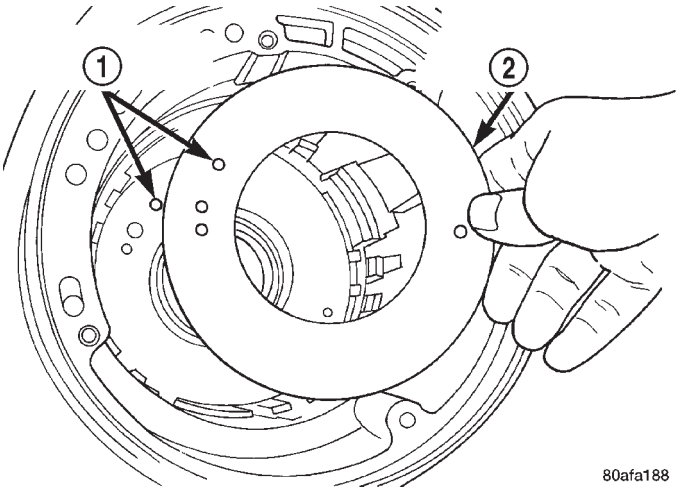

Fig. 308 Install Piston Retainer Gasket

1 – GASKET HOLES MUST LINE UP
2 – LOW/REVERSE CLUTCH PISTON RETAINER GASKET

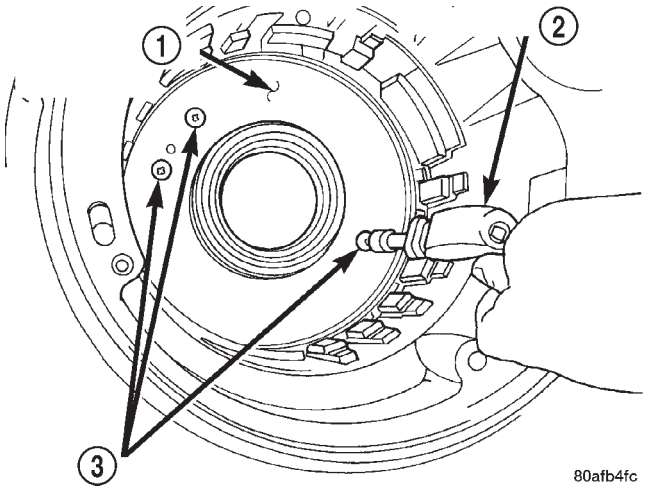

Fig. 310 Install Retainer Attaching Screws

1 – LOW/REVERSE CLUTCH PISTON RETAINER
2 – SCREWDRIVER
3 – TORX-LOC SCREWS

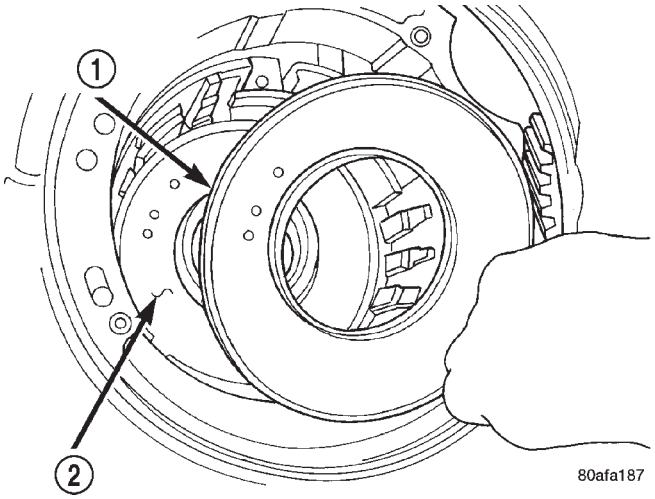

Fig. 309 Install Piston Retainer

1 – LOW/REVERSE CLUTCH PISTON RETAINER
2 – GASKET

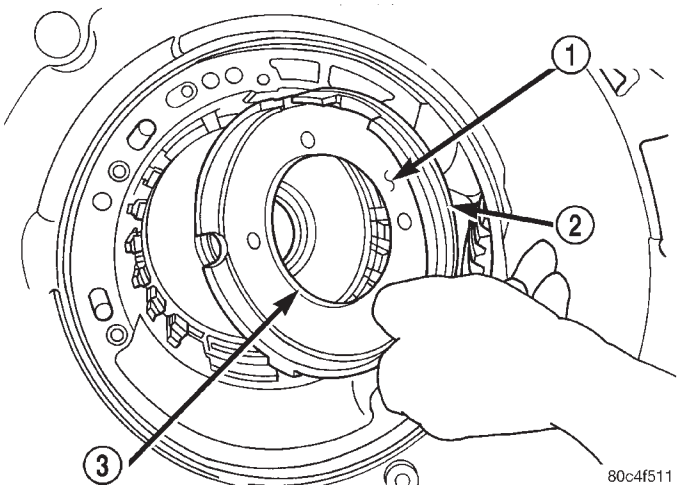

Fig. 311 Install Low/Reverse Clutch Piston

1 – LOW/REVERSE CLUTCH PISTON
2 – SEAL
3 – SEAL

DISASSEMBLY AND ASSEMBLY (Continued)

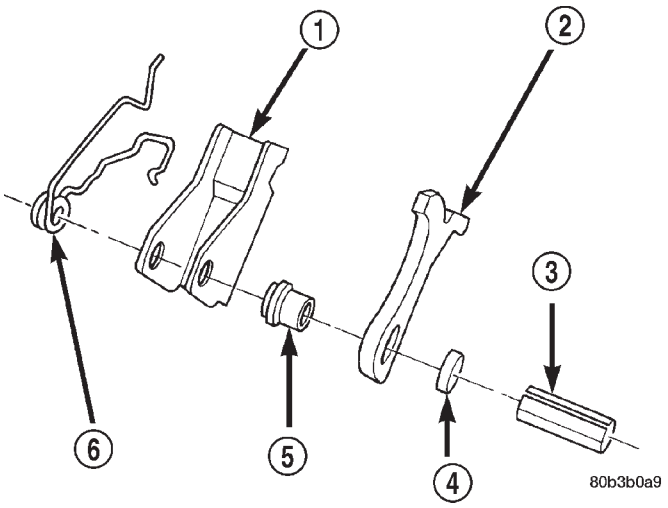

Fig. 312 Guide Bracket Disassembled

1 – GUIDE BRACKET
2 – PAWL
3 – SPLIT SLEEVE
4 – SPACER
5 – STEPPED SPACER
6 – ANTIRATCHET SPRING

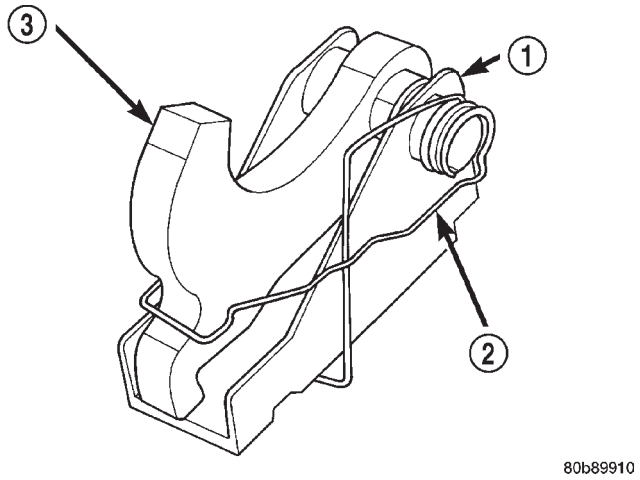

Fig. 313 Guide Bracket

1 – GUIDE BRACKET
2 – ANTIRATCHET SPRING (MUST BE ASSEMBLED AS SHOWN)
3 – PAWL

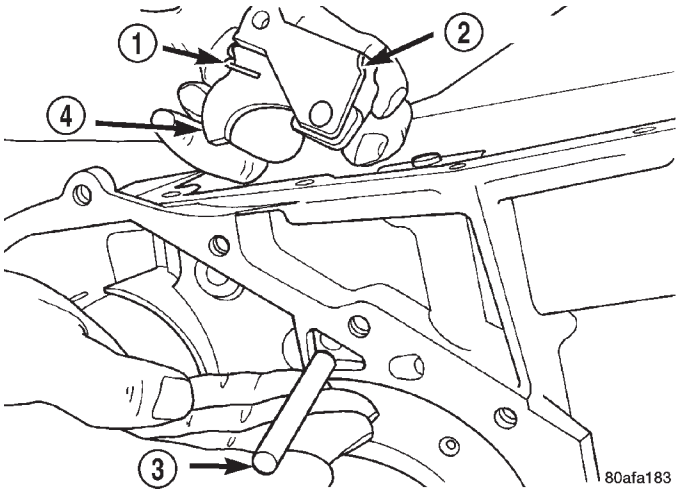

Fig. 314 Pivot Shaft and Guide Bracket

1 – ANTIRATCHET SPRING
2 – GUIDE BRACKET
3 – PIVOT SHAFT
4 – PAWL

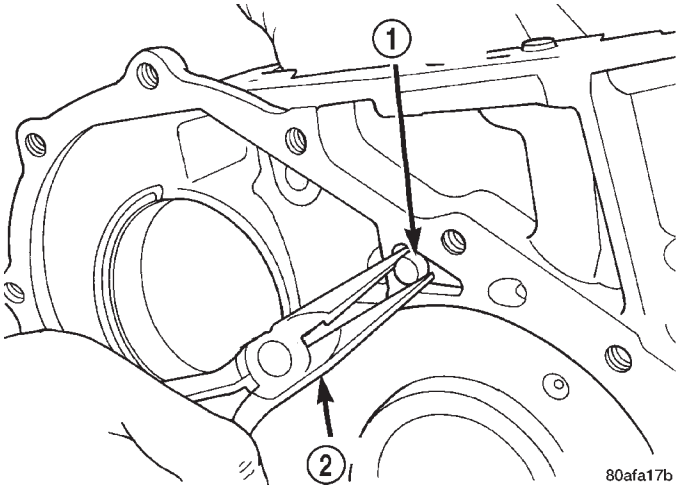

Fig. 315 Install Guide Bracket Pivot Shaft

1 – GUIDE BRACKET PIVOT SHAFT
2 – PLIERS

DISASSEMBLY AND ASSEMBLY (Continued)

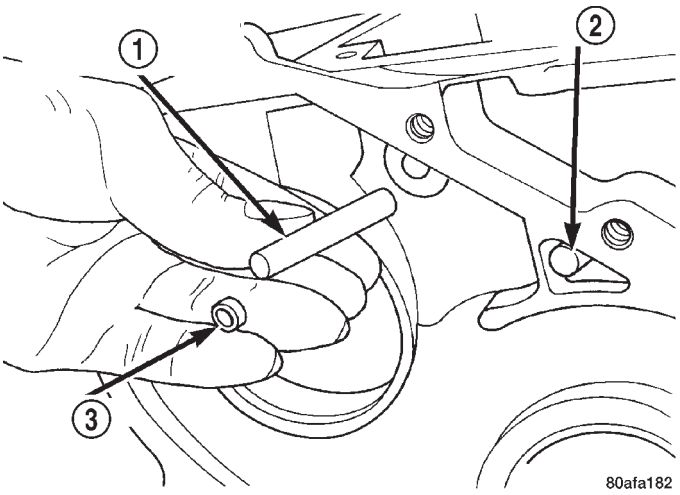

Fig. 316 Install Anchor Shaft and Plug

1 – GUIDE BRACKET ANCHOR SHAFT
2 – PIVOT SHAFT
3 – ANCHOR SHAFT PLUG

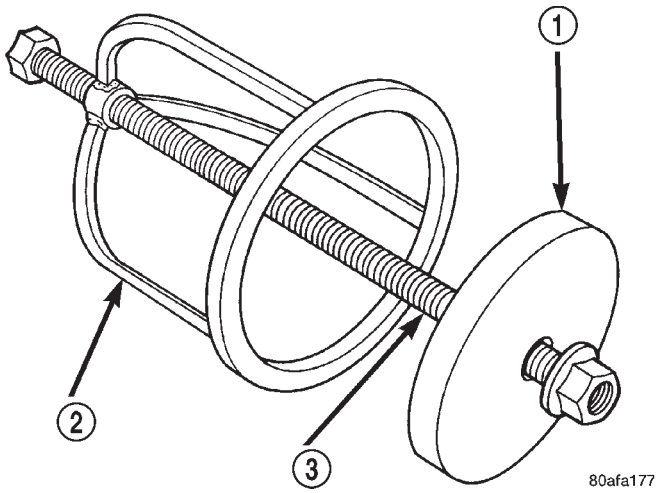

Fig. 318 Low/Reverse Spring Compressor Tool

1 – TOOL 6057
2 – TOOL 5059
3 – TOOL 5058–3

CAUTION: When installing, be sure guide bracket and split sleeve touch the rear of the transaxle case.

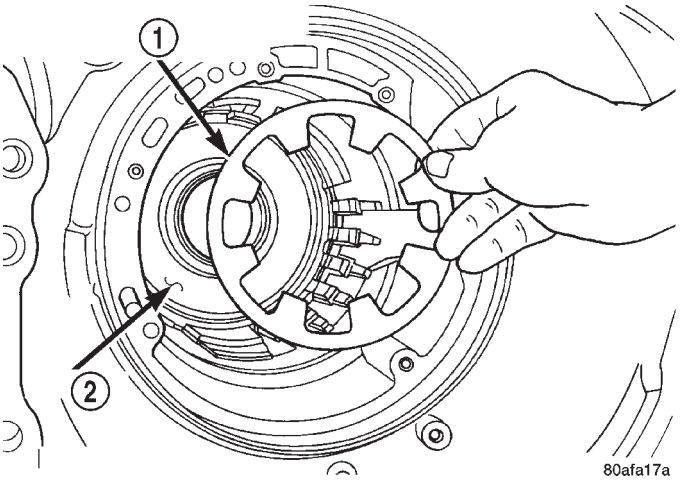

Fig. 317 Install Low/Reverse Piston Return Spring

1 – LOW/REVERSE PISTON RETURN SPRING
2 – PISTON

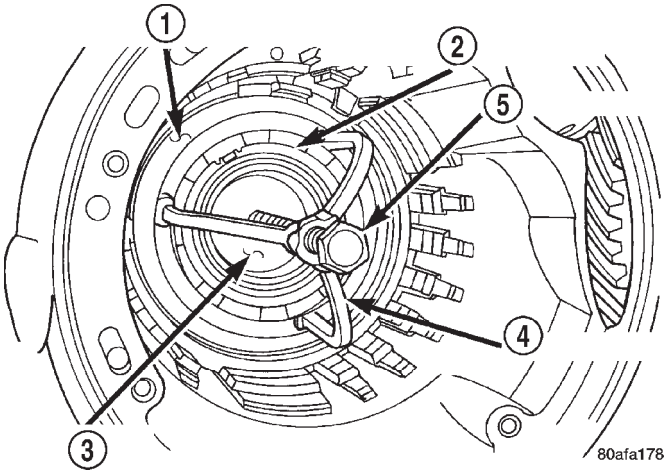

Fig. 319 Compressor Tool in Use

1 – LOW/REVERSE CLUTCH RETURN SPRING
2 – SNAP RING (INSTALL AS SHOWN)
3 – TOOL 6057
4 – TOOL 5059
5 – TOOL 5058–3

DISASSEMBLY AND ASSEMBLY (Continued)

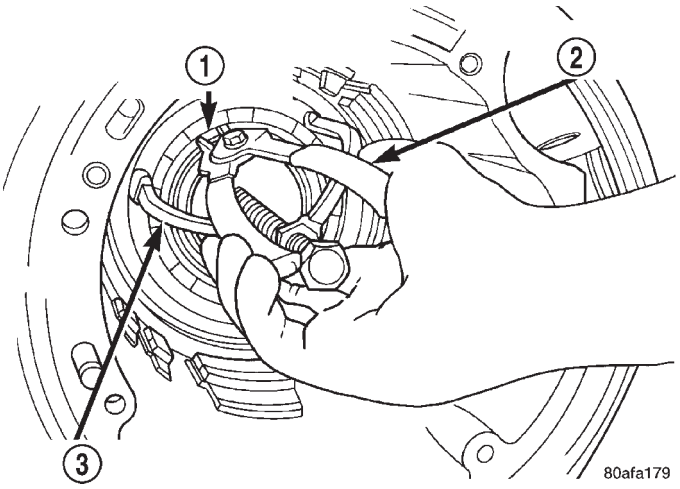

Fig. 320 Install Snap Ring

1 – SNAP RING OPENING MUST BE BETWEEN SPRING LEVERS (AS SHOWN)
2 – SNAP RING PLIERS
3 – TOOL 6057

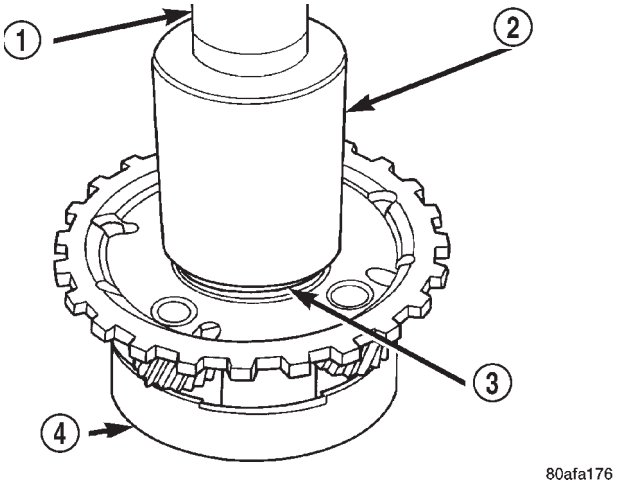

Fig. 321 Install Rear Carrier Bearing Cone

1 – ARBOR PRESS RAM
2 – TOOL 6053
3 – NEW BEARING CONE
4 – REAR CARRIER ASSEMBLY

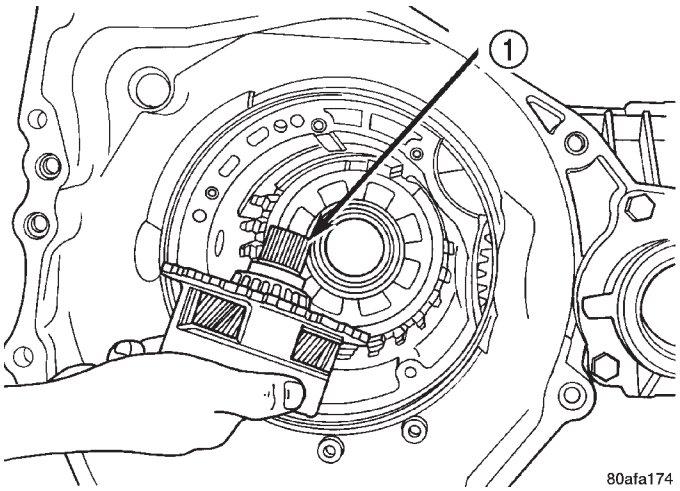

Fig. 322 Install Rear Carrier Assembly

1 – REAR CARRIER ASSEMBLY

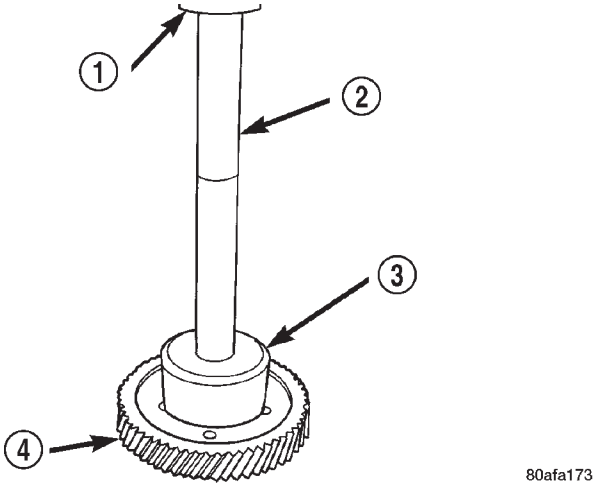

Fig. 323 Install Output Gear Bearing Cone

1 – ARBOR PRESS RAM
2 – HANDLE C-4171
3 – TOOL 5052
4 – OUTPUT GEAR

DISASSEMBLY AND ASSEMBLY (Continued)

OUTPUT GEAR BEARING ADJUSTMENT

(1) With output gear removed: install a 4.50 mm (0.177 inch) gauging shim on the rear carrier assembly hub, using grease to hold the shim in place.

(2) Using Tool 6259, install output gear and bearing assembly. Torque to 271 N·m (200 ft. lbs.).

To measure bearing end play:

(3) Attach Tool L-4432 to the gear.

(4) Push and pull the gear while rotating back and forth to insure seating of the bearing rollers.

(5) Using a dial indicator, mounted to the transaxle case, measure output gear end play (Fig. 324).

(6) Refer to the output gear bearing shim chart for the required shim to obtain proper bearing setting.

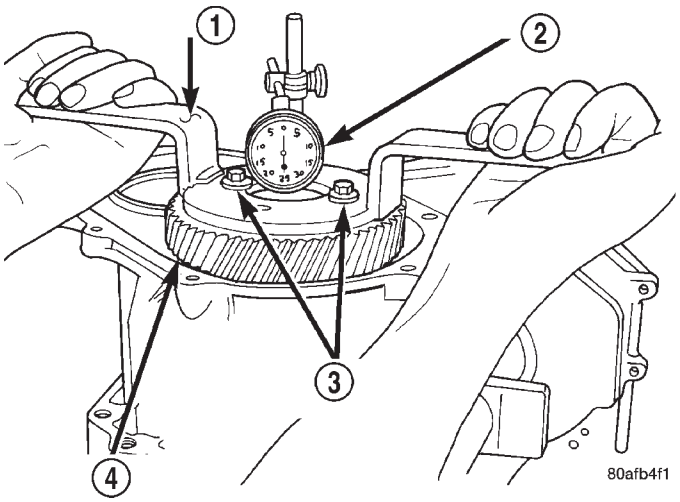

Fig. 324 Checking Output Gear Bearings End Play

1 – TOOL L-4432
2 – DIAL INDICATOR
3 – SPECIAL SCREWS TOOL 6260
4 – OUTPUT GEAR

OUTPUT GEAR BEARING SHIM CHART

End Play	Shim Needed	Part Number	End Play	Shim Needed	Part Number
0.05mm (0.002 in.)	4.42mm (0.174 in.)	4412830AB	0.53mm (0.021 in.)	3.94mm (0.155 in.)	4412818AB
0.08mm (0.003 in.)	4.38mm (0.172 in.)	4412829AB	0.56mm (0.022 in.)	3.90mm (0.154 in.)	4412817AB
0.10mm (0.004 in.)	4.38mm (0.172 in.)	4412829AB	0.58mm (0.023 in.)	3.90mm (0.154 in.)	4412817AB
0.13mm (0.005 in.)	4.34mm (0.171 in.)	4412828AB	0.61mm (0.024 in.)	3.86mm (0.152 in.)	4412816AB
0.15mm (0.006 in.)	4.30mm (0.169 in.)	4412827AB	0.64mm (0.025 in.)	3.82mm (0.150 in.)	4412815AB
0.18mm (0.007 in.)	4.30mm (0.169 in.)	4412827AB	0.66mm (0.026 in.)	3.82mm (0.150 in.)	4412815AB
0.20mm (0.008 in.)	4.26mm (0.168 in.)	4412826AB	0.69mm (0.027 in.)	3.78mm (0.149 in.)	4412814AB
0.23mm (0.009 in.)	4.22mm (0.166 in.)	4412825AB	0.71mm (0.028 in.)	3.74mm (0.147 in.)	4412813AB
0.25mm (0.010 in.)	4.22mm (0.166 in.)	4412825AB	0.74mm (0.029 in.)	3.74mm (0.147 in.)	4412813AB
0.28mm (0.011 in.)	4.18mm (0.165 in.)	4412824AB	0.76mm (0.030 in.)	3.70mm (0.146 in.)	4412812AB
0.30mm (0.012 in.)	4.14mm (0.163 in.)	4412823AB	0.79mm (0.031 in.)	3.66mm (0.144 in.)	4412811AB
0.33mm (0.013 in.)	4.14mm (0.163 in.)	4412823AB	0.81mm (0.032 in.)	3.66mm (0.144 in.)	4412811AB

DISASSEMBLY AND ASSEMBLY (Continued)

End Play	Shim Needed	Part Number	End Play	Shim Needed	Part Number
0.36mm (0.014 in.)	4.10mm (0.161 in.)	4412822AB	0.84mm (0.033 in.)	3.62mm (0.143 in.)	4412810AB
0.38mm (0.015 in.)	4.10mm (0.161 in.)	4412822AB	0.86mm (0.034 in.)	3.62mm (0.143 in.)	4412810AB
0.41mm (0.016 in.)	4.06mm (0.160 in.)	4412821AB	0.89mm (0.035 in.)	3.58mm (0.141 in.)	4412809AB
0.43mm (0.017 in.)	4.02mm (0.158 in.)	4412820AB	0.91mm (0.036 in.)	3.54mm (0.139 in.)	4412808AB
0.46mm (0.018 in.)	4.02mm (0.158 in.)	4412820AB	0.94mm (0.037 in.)	3.54mm (0.139 in.)	4412808AB
0.48mm (0.019 in.)	3.98mm (0.157 in.)	4412819AB	0.97mm (0.038 in.)	3.50mm (0.138 in.)	4412807AB
0.51mm (0.020 in.)	3.94mm (0.155 in.)	4412818AB			

(7) Use Tool 6259 to remove the retaining bolt and washer. To remove the output gear, use Tool L-4407A.

(8) Remove the gauging shim and install the proper shim (Fig. 325). Use grease to hold the shim in place. Install the output gear and bearing assembly (Fig. 326).

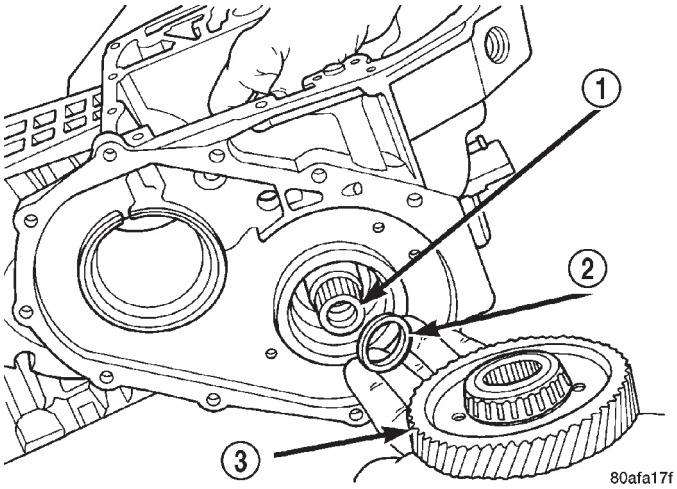

Fig. 325 Output Gear and (Select) Shim

1 – REAR CARRIER ASSEMBLY
2 – SHIM (SELECT)
3 – OUTPUT GEAR

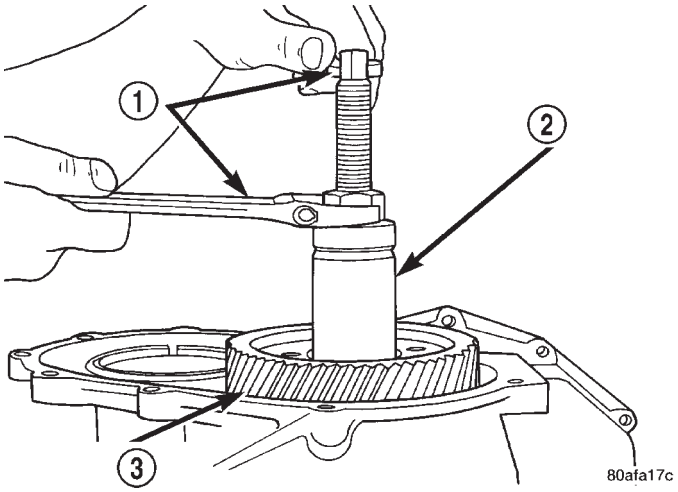

Fig. 326 Install Output Gear

1 – WRENCHES
2 – TOOL 6261 WITH STUD
3 – OUTPUT GEAR

CAUTION: Always use new retaining bolt, old retaining bolt may not be reused.

DISASSEMBLY AND ASSEMBLY (Continued)

(9) Install the new retaining bolt and washer (Fig. 327). Tighten to 271 N·m (200 ft. lbs.) (Fig. 328).

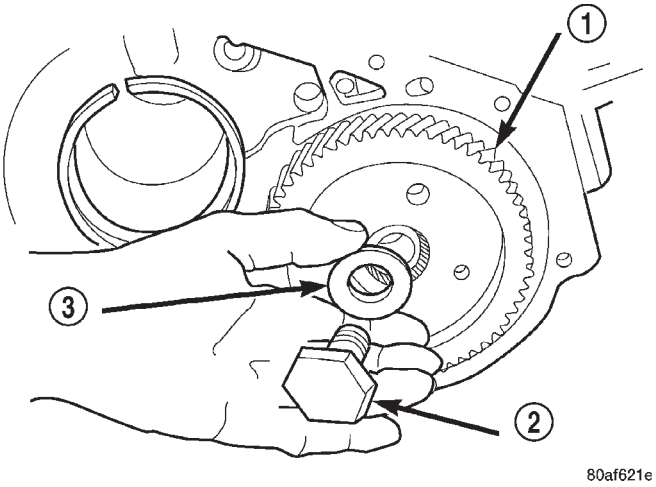

Fig. 327 Install Output Gear Bolt and Washer

1 – OUTPUT GEAR
2 – BOLT
3 – CONED LOCK WASHER

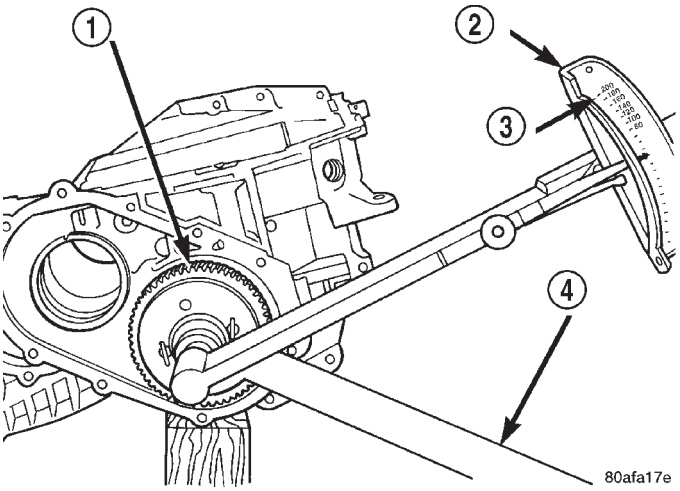

Fig. 328 Tighten Output Gear to 271 N• m (200 ft. lbs.)

1 – OUTPUT GEAR
2 – TORQUE WRENCH
3 – 200 FT. LBS.
4 – TOOL 6259

(10) Using an inch-pound torque wrench, check the turning torque (Fig. 329). **The torque should be between 3 and 8 inch-pounds.**

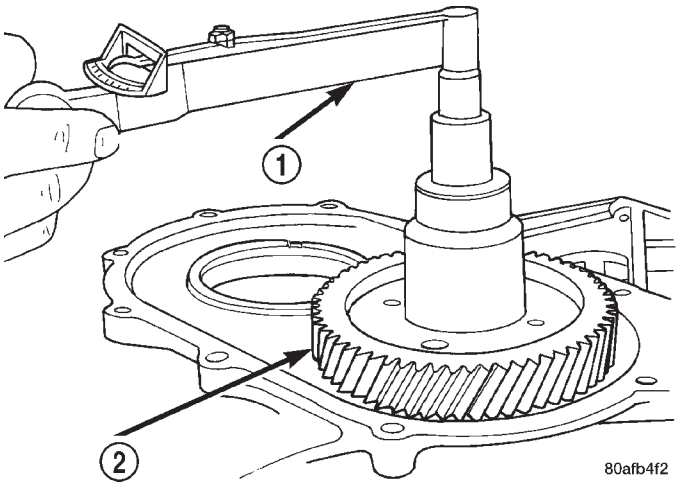

Fig. 329 Check Output Gear Bearings Turning Torque

1 – INCH-POUND TORQUE WRENCH
2 – OUTPUT GEAR

If the turning torque is too high, install a 0.04 mm (0.0016 inch) thicker shim. If the turning torque is too low, install a 0.04 mm (0.0016 inch) thinner shim. Repeat until the proper turning torque is 3 to 8 inch pounds.

NOTE: Install output gear stirrup and strap bolts.

All transaxles utilize a stirrup and retaining strap that is attached to the output gear. The stirrup prevents the output gear retaining bolt from turning and backing out of the rear carrier. The strap is used to hold the stirrup to the output gear and prevent the stirrup retaining bolts from backing out.

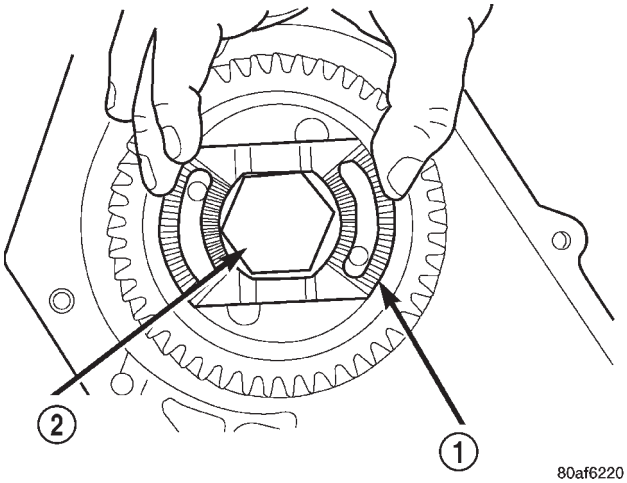

Fig. 330 Output Gear Retaining Bolt Stirrup (Serration Side Out)

1 – STIRRUP
2 – OUTPUT GEAR RETAINING BOLT

DISASSEMBLY AND ASSEMBLY (Continued)

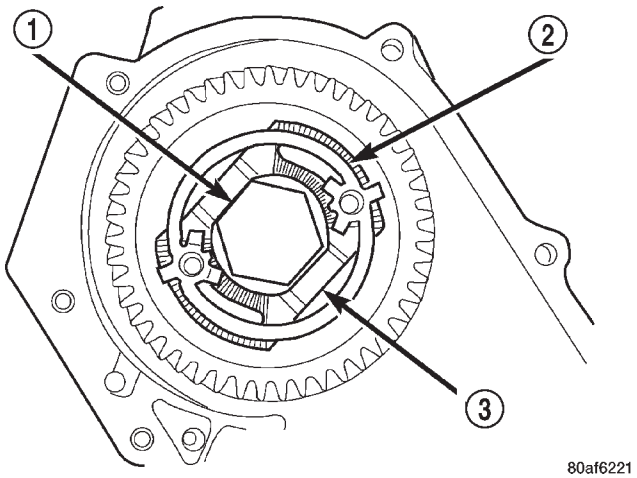

Fig. 331 Stirrup Strap (Align Strap Holes With Tapped Gear Holes)

1 – OUTPUT GEARBOLT
2 – RETAINING STRAP
3 – STIRRUP

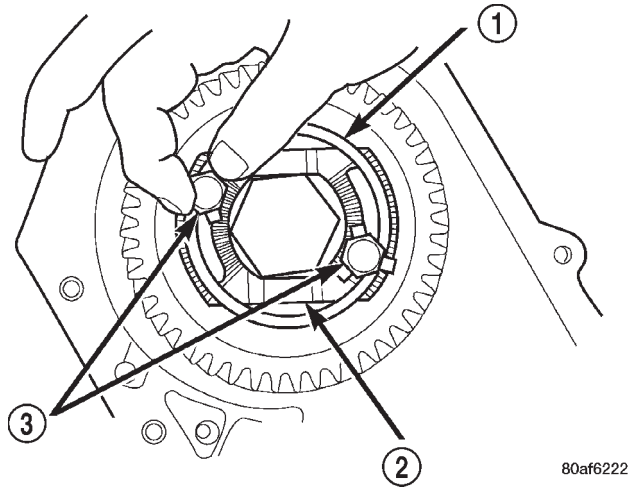

Fig. 332 Install Strap Bolts

1 – RETAINING STRAP
2 – STIRRUP
3 – RETAINING STRAP BOLTS

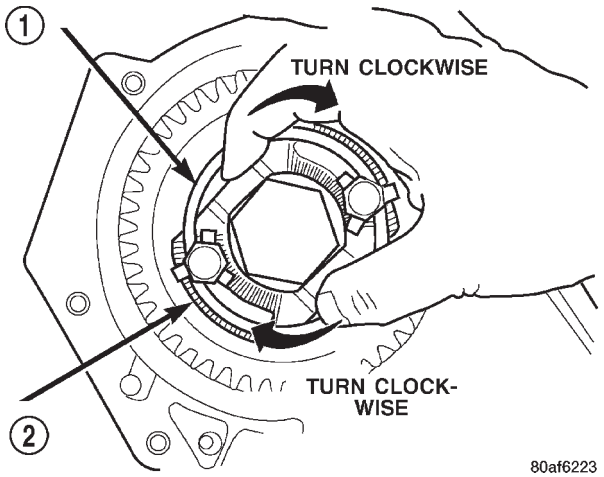

Fig. 333 Turn Stirrup Clockwise Against Flats Of Output Gear Retaining Bolt

1 – RETAINING STRAP
2 – STIRRUP

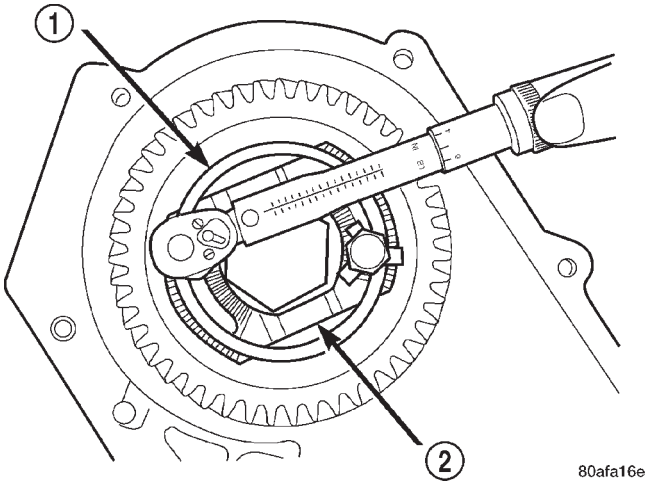

Fig. 334 Tighten Stirrup Strap Bolts To 23 N·m (200 in.) lbs.)

1 – RETAINING STRAP
2 – STIRRUP

DISASSEMBLY AND ASSEMBLY (Continued)

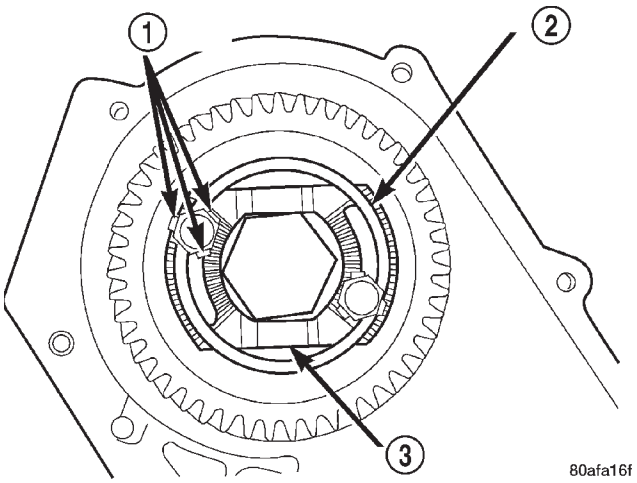

Fig. 335 Bend Tabs On Strap Up Against Flats Of Bolts

1 – RETAINING STRAP TABS
2 – RETAINING STRAP
3 – STIRRUP

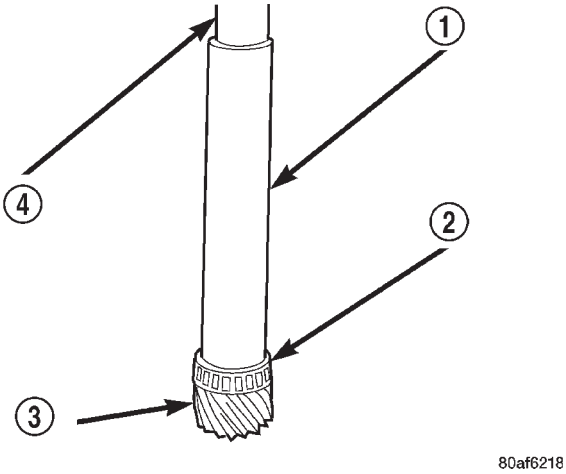

Fig. 336 Install Transfer Shaft Bearing Cone

1 – TOOL 6052
2 – NEW BEARING CONE
3 – TRANSFER SHAFT
4 – ARBOR PRESS RAM

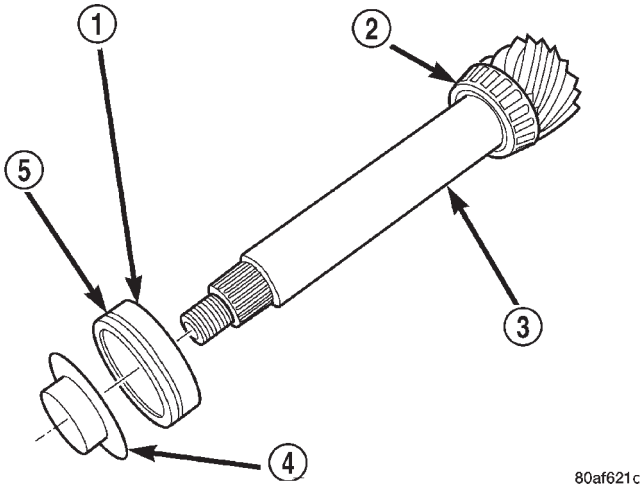

Fig. 337 Install Bearing Cup To Shaft

1 – BEARING CUP
2 – BEARING CONE
3 – TRANSFER SHAFT
4 – OIL BAFFLE
5 – O-RING

NOTE: Screw Tool 5049-A onto transfer shaft. Install transfer shaft.

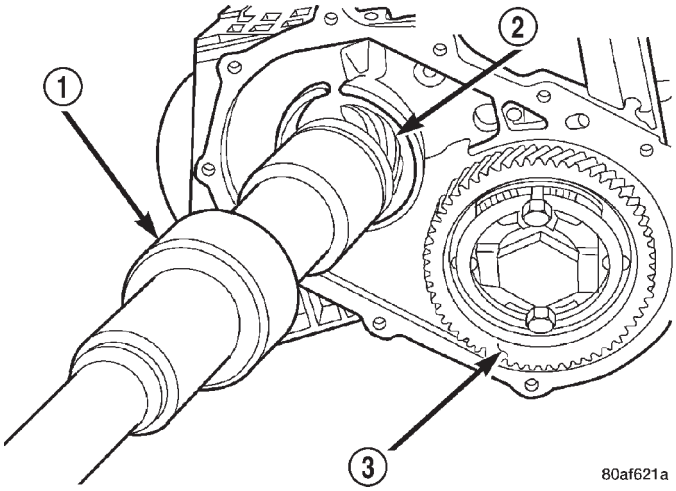

Fig. 338 Install Transfer Shaft

1 – SPECIAL TOOL 5049–A
2 – TRANSFER SHAFT
3 – OUTPUT GEAR

DISASSEMBLY AND ASSEMBLY (Continued)

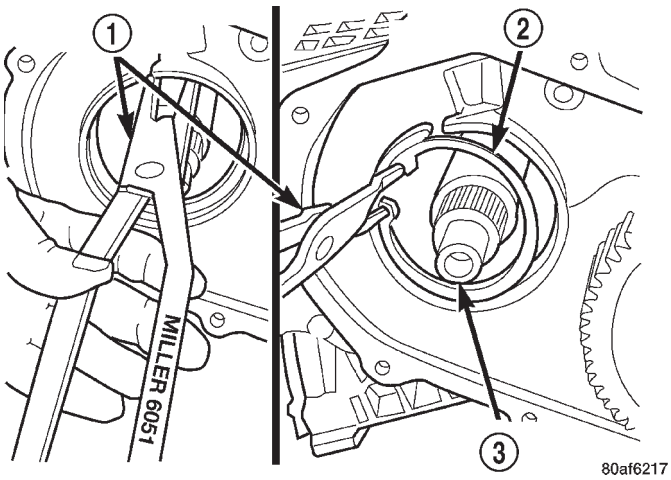

Fig. 339 Install Transfer Shaft Bearing Snap Ring

1 – SNAP RING PLIERS TOOL 6051
2 – TRANSFER SHAFT BEARING SNAP RING
3 – TRANSFER SHAFT

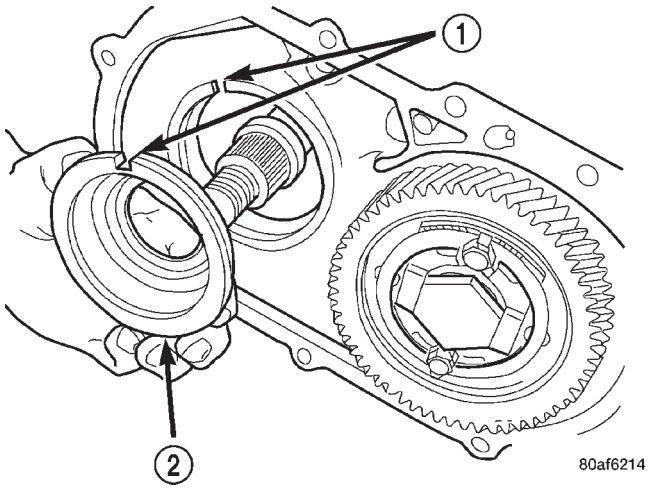

Fig. 341 Install Bearing Cup Retainer

1 – ALIGN INDEXING TAB TO SLOT
2 – BEARING CUP RETAINER

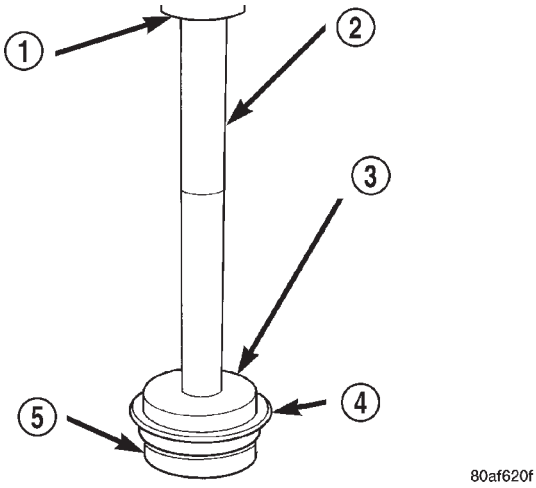

Fig. 340 Install Transfer Shaft Bearing Cup Into Retainer

1 – ARBOR PRESS RAM
2 – HANDLE C-4171
3 – TOOL 6061
4 – TRANSFER SHAFT BEARING CUP RETAINER
5 – USE REMOVED BEARING CUP TO SUPPORT RETAINER

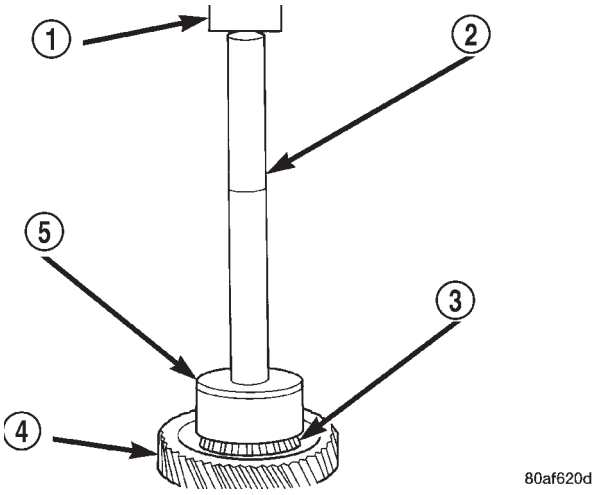

Fig. 342 Install Transfer Gear Bearing Cone

1 – ARBOR PRESS RAM
2 – HANDLE C-4171
3 – NEW BEARING CONE
4 – TRANSFER SHAFT GEAR
5 – TOOL 5052

DISASSEMBLY AND ASSEMBLY (Continued)

TRANSFER SHAFT BEARING

(1) Install a 4.66 mm (0.184 inch) gauging shim on the transfer shaft.

(2) Install transfer shaft gear and bearing assembly and torque the nut to 271 N·m (200 ft. lbs.).

To measure bearing end play:

- Attach Tool L-4432 to the transfer gear.
- Mount a steel ball with grease into the end of the transfer shaft.
- Push and pull the gear while rotating back and forth to insure seating of the bearing rollers.
- Using a dial indicator, measure transfer shaft end play.

TRANSFER SHAFT BEARING SHIM CHART

End Play	Shim Needed	Part Number	End Play	Shim Needed	Part Number
0.05mm (0.002 in.)	4.66mm (0.183 in.)	4505588AB	0.76mm (0.030 in.)	3.94mm (0.155 in.)	4412818AB
0.08mm (0.003 in.)	4.62mm (0.182 in.)	4412835AB	0.79mm (0.031 in.)	3.90mm (0.154 in.)	4412817AB
0.10mm (0.004 in.)	4.58mm (0.180 in.)	4412834AB	0.81mm (0.032 in.)	3.90mm (0.154 in.)	4412817AB
0.13mm (0.005 in.)	4.58mm (0.180 in.)	4412834AB	0.84mm (0.033 in.)	3.86mm (0.152 in.)	4412816AB
0.15mm (0.006 in.)	4.54mm (0.178 in.)	4412833AB	0.86mm (0.034 in.)	3.82mm (0.150 in.)	4412815AB
0.18mm (0.007 in.)	4.50mm (0.177 in.)	4412832AB	0.89mm (0.035 in.)	3.82mm (0.150 in.)	4412815AB
0.20mm (0.008 in.)	4.50mm (0.177 in.)	4412832AB	0.91mm (0.036 in.)	3.78mm (0.149 in.)	4412814AB
0.23mm (0.009 in.)	4.46mm (0.175 in.)	4412831AB	0.94mm (0.037 in.)	3.74mm (0.147 in.)	4412813AB
0.25mm (0.010 in.)	4.46mm (0.175 in.)	4412831AB	0.97mm (0.038 in.)	3.74mm (0.147 in.)	4412813AB
0.28mm (0.011 in.)	4.42mm (0.174 in.)	4412830AB	0.99mm (0.039 in.)	3.70mm (0.146 in.)	4412812AB
0.30mm (0.012 in.)	4.38mm (0.172 in.)	4412829AB	1.02mm (0.040 in.)	3.66mm (0.144 in.)	4412811AB
0.33mm (0.013 in.)	4.38mm (0.172 in.)	4412829AB	1.04mm (0.041 in.)	3.66mm (0.144 in.)	4412811AB
0.36mm (0.014 in.)	4.34mm (0.171 in.)	4412828AB	1.07mm (0.042 in.)	3.62mm (0.143 in.)	4412810AB
0.38mm (0.015 in.)	4.30mm (0.169 in.)	4412827AB	1.08mm (0.043 in.)	3.62mm (0.143 in.)	4412810AB
0.41mm (0.016 in.)	4.30mm (0.169 in.)	4412827AB	1.12mm (0.044 in.)	3.58mm (0.141 in.)	4412809AB
0.43mm (0.017 in.)	4.26mm (0.168 in.)	4412826AB	1.14mm (0.045 in.)	3.54mm (0.139 in.)	4412808AB
0.46mm (0.018 in.)	4.22mm (0.166 in.)	4412825AB	1.17mm (0.046 in.)	3.54mm (0.139 in.)	4412808AB
0.48mm (0.019 in.)	4.22mm (0.166 in.)	4412825AB	1.19mm (0.047 in.)	3.50mm (0.138 in.)	4412807AB
0.50mm (0.020 in.)	4.18mm (0.165 in.)	4412824AB	1.22mm (0.048 in.)	3.46mm (0.136 in.)	4412806AB

DISASSEMBLY AND ASSEMBLY (Continued)

End Play	Shim Needed	Part Number	End Play	Shim Needed	Part Number
0.53mm (0.021 in.)	4.18mm (0.165 in.)	4412824AB	1.24mm (0.049 in.)	3.46mm (0.136 in.)	4412806AB
0.56mm (0.022 in.)	4.14mm (0.163 in.)	4412823AB	1.27mm (0.050 in.)	3.42mm (0.135 in.)	4412805AB
0.58mm (0.023 in.)	4.10mm (0.161 in.)	4412822AB	1.30mm (0.051 in.)	3.38mm (0.133 in.)	4412804AB
0.61mm (0.024 in.)	4.10mm (0.161 in.)	4412822AB	1.32mm (0.052 in.)	3.38mm (0.133 in.)	4412804AB
0.64mm (0.025 in.)	4.06mm (0.160 in.)	4412821AB	1.35mm (0.053 in.)	3.34mm (0.132 in.)	4412803AB
0.66mm (0.026 in.)	4.02mm (0.158 in.)	4412820AB	1.37mm (0.054 in.)	3.34mm (0.132 in.)	4412803AB
0.69mm (0.027 in.)	4.02mm (0.158 in.)	4412820AB	1.40mm (0.055 in.)	3.30mm (0.130 in.)	4412802AB
0.71mm (0.028 in.)	3.98mm (0.157 in.)	4412819AB	1.45mm (0.057 in	3.26mm (0.128 in.)	4412801AB
0.74mm (0.029 in.)	3.94mm (0.155 in.)	4412818AB	1.47mm (0.058 in.)	2.22mm (0.127 in.)	4505570AB

(3) Refer to the Transfer Bearing Shim Chart for the required shim combination to obtain the proper bearing setting.

(4) Use Tool 6259 to remove the retaining nut and washer. Remove the transfer shaft gear using Tool L-4407A.

(5) Remove the gauging shim and install the correct shim (Fig. 343). Install the transfer gear and bearing assembly (Fig. 344).

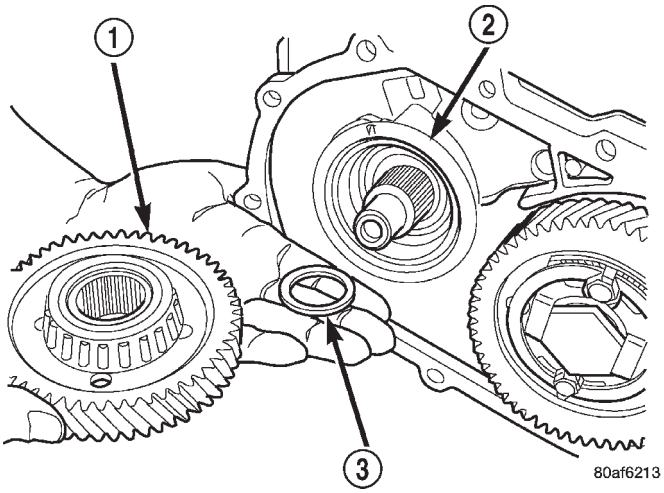

Fig. 343 Transfer Shaft Gear and (Select) Shim

1 – TRANSFER SHAFT GEAR
2 – BEARING CUP RETAINER
3 – SHIM (SELECT)

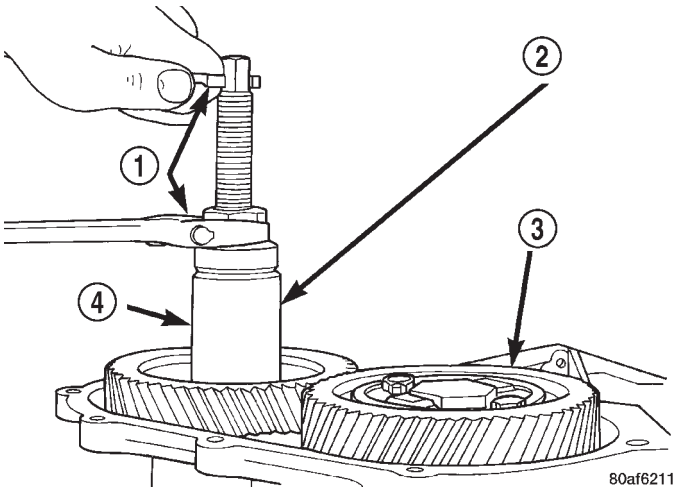

Fig. 344 Install Transfer Shaft Gear

1 – WRENCHES
2 – SPECIAL TOOL 6261
3 – OUTPUT GEAR
4 – TRANSFER SHAFT GEAR

CAUTION: Original retaining nut may not be reused. Always use a new retaining nut when reassembling.

(6) Install the new retaining nut and washer and torque to 271 N·m (200 ft. lbs.) (Fig. 345). **Measure transfer shaft end play, end play should be 0.05 to 0.10 mm (0.002 to 0.004 inch).**

DISASSEMBLY AND ASSEMBLY (Continued)

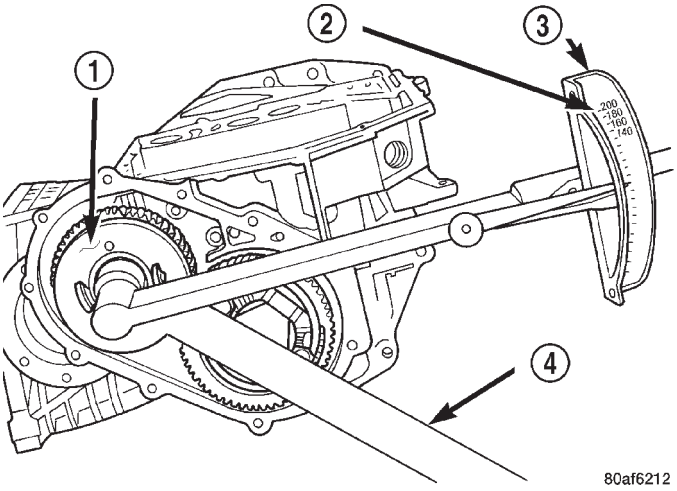

Fig. 345 Tighten Nut to 271 N•m (200 ft. lbs.)

1 – TRANSFER SHAFT GEAR
2 – 200 FT. LBS.
3 – TORQUE WRENCH
4 – SPECIAL TOOL 6259

(7) Measure bearing end play as outlined in Step 3. End play should be between 0.05 mm and 0.10 mm (0.002 to 0.004 inch).

NOTE: If end play is too high, install a 0.04 mm (0.0016 inch) thinner shim. If end play is too low, install a 0.04 mm (0.0016 inch) thicker shim combination. Repeat until 0.05 to 0.10 mm (0.002 to 0.004 inch) end play is obtained.

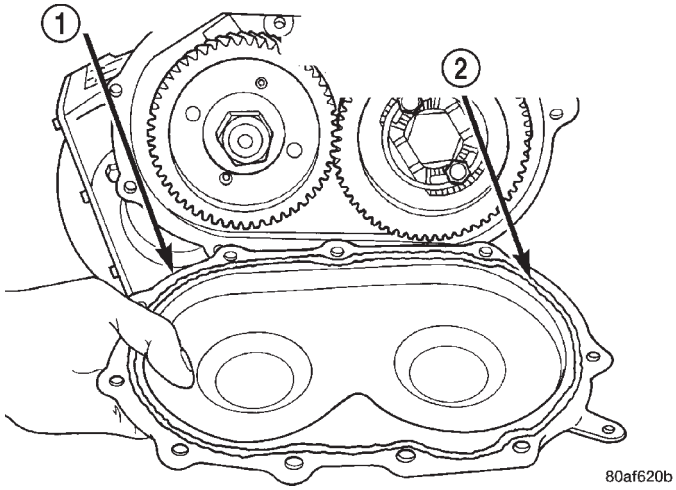

Fig. 346 Install Rear Cover and Torque to 20 N·m (125 in. lbs.)

1 – REAR COVER
2 – 1/8 INCH BEAD OF MOPAR SILICONE RUBBER ADHESIVE SEALANT AS SHOWN

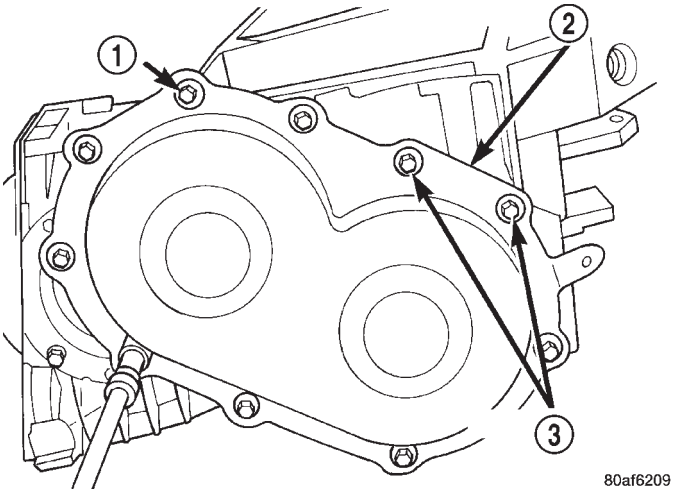

Fig. 347 Install Rear Cover Bolts

1 – REAR COVER BOLTS
2 – REAR COVER
3 – USE SEALANT ON BOLTS

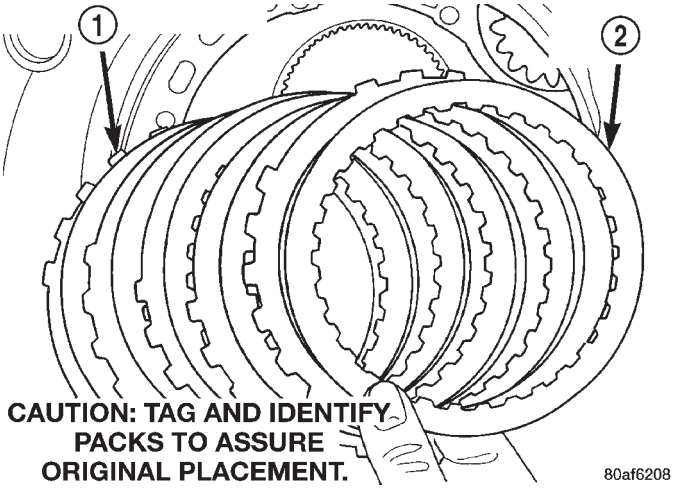

Fig. 348 Install Low/Reverse Clutch Pack

1 – CLUTCH PLATES (5)
2 – CLUTCH DISCS (5)

DISASSEMBLY AND ASSEMBLY (Continued)

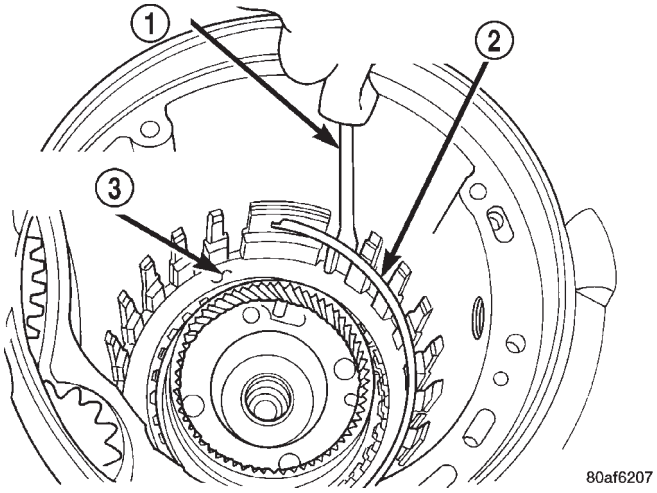

Fig. 349 Install Low/Reverse Reaction Plate Snap Ring

1 – SCREWDRIVER
2 – LOW/REVERSE REACTION PLATE FLAT SNAP RING
3 – DO NOT SCRATCH CLUTCH PLATE

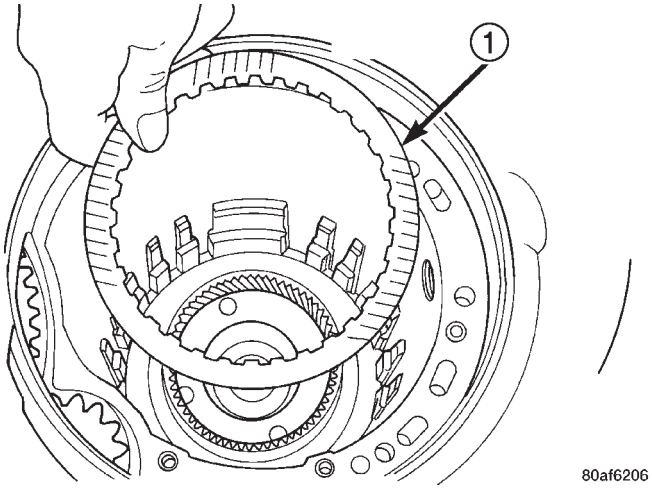

Fig. 350 Install One Disc

1 – ONE DISC FROM LOW/REVERSE CLUTCH

NOTE: Install the low/reverse reaction plate stepped side DOWN.

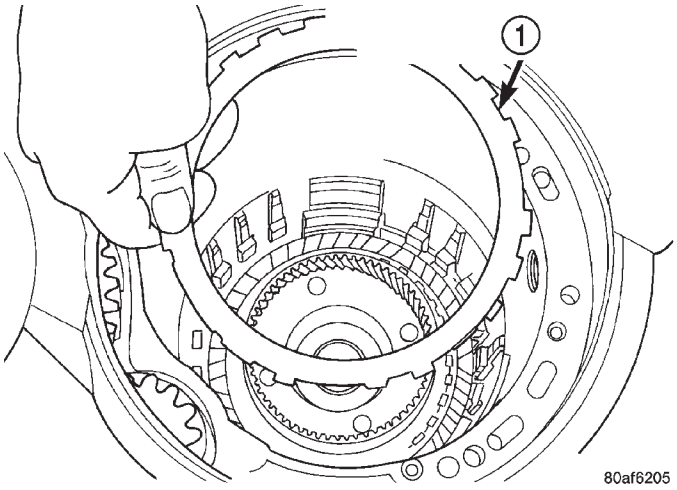

Fig. 351 Install Low/Reverse Reaction Plate

1 – LOW/REVERSE REACTION PLATE (FLAT SIDE UP)

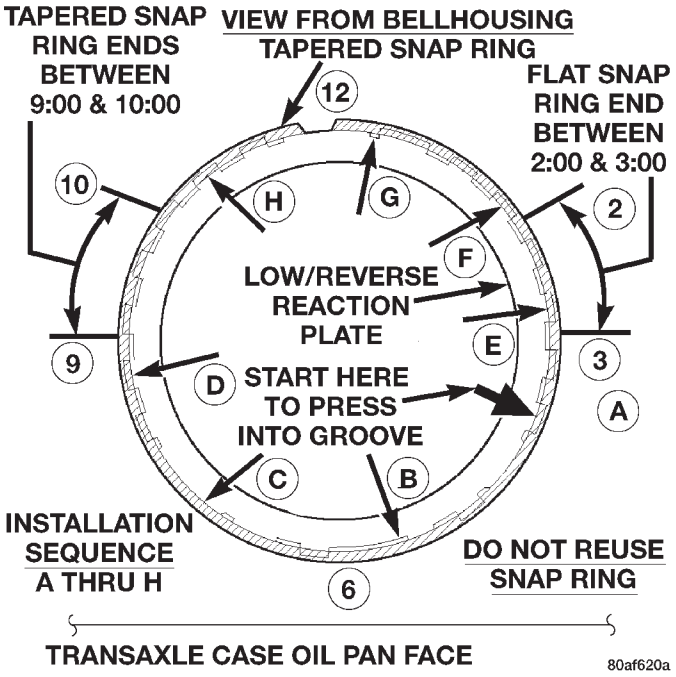

Fig. 352 Tapered Snap Ring Instructions

DISASSEMBLY AND ASSEMBLY (Continued)

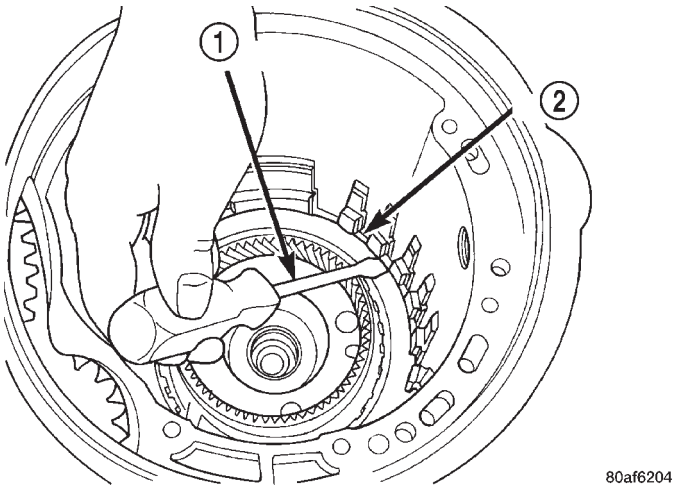

Fig. 353 Snap Ring Installed

1 – SCREWDRIVER
2 – TAPERED SNAP RING (INSTALL AS SHOWN)

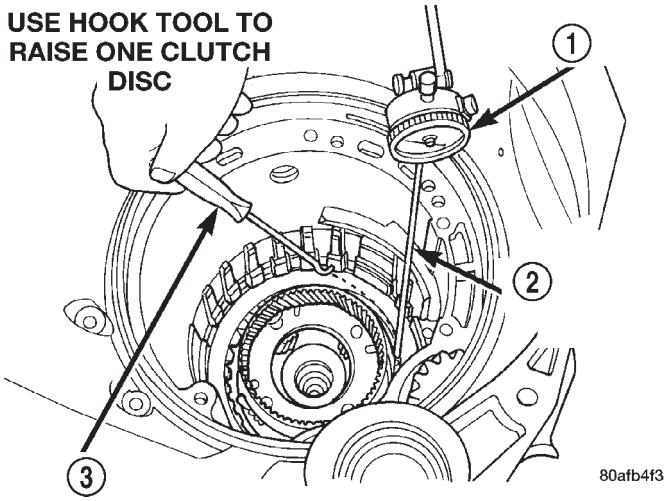

Fig. 354 Check Low/Reverse Clutch Clearance

1 – DIAL INDICATOR
2 – DIAL INDICATOR TIP TOOL 6268
3 – HOOK TOOL

Press down clutch pack with finger and zero dial indicator. **Low/Reverse clutch pack clearance is 0.89 to 1.47 (0.035 to 0.058 inch).**

Select the proper low/reverse reaction plate to achieve specifications:

LOW/REVERSE REACTION PLATE CHART

PART NUMBER	THICKNESS
4799846AA	5.88 mm (0.232 in.)
4799847AA	6.14 mm (0.242 in.)
4799848AA	6.40 mm (0.252 in.)
4799849AA	6.66 mm (0.262 in.)
4799855AA	6.92 mm (0.273 in.)

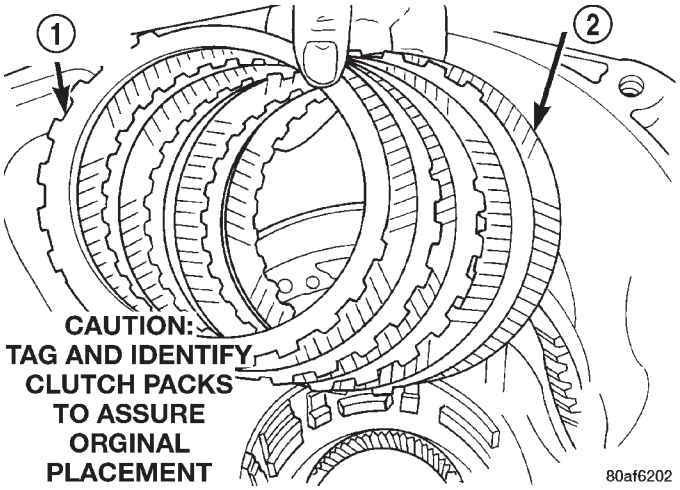

Fig. 355 Install 2/4 Clutch Pack

1 – CLUTCH PLATE (4)
2 – CLUTCH DISC (4)

NOTE: When installing the 2-4 clutch plates and discs, the orientation should be alternated so the pilot pads of adjacent plates do not align, refer to (Fig. 356).

DISASSEMBLY AND ASSEMBLY (Continued)

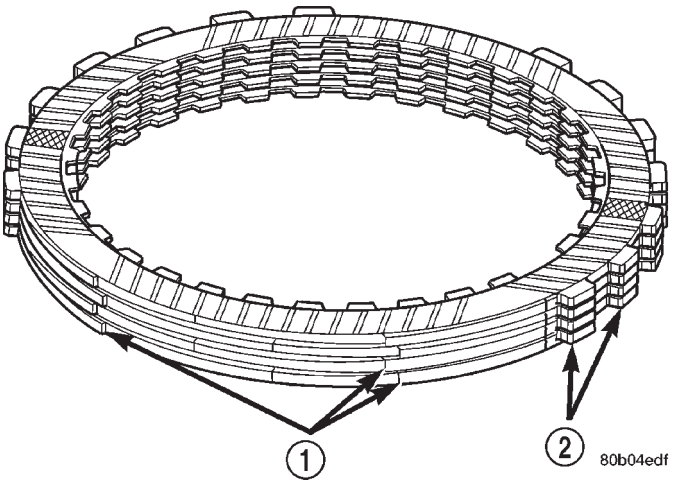

Fig. 356 Stagger 2/4 Clutch Plate Pads

1 – PILOT PADS
2 – LUGS

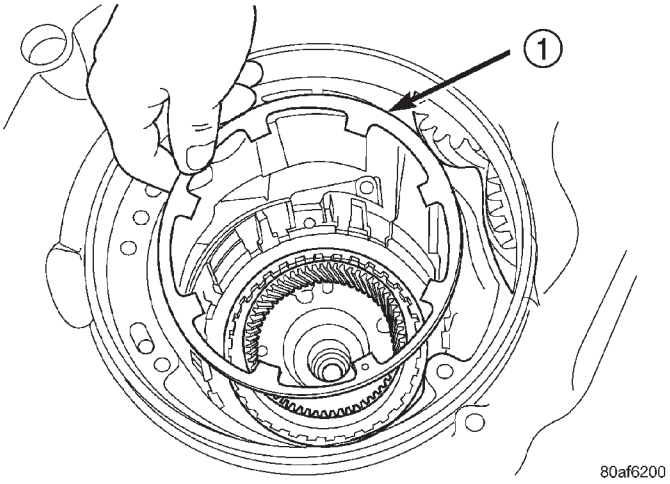

Fig. 357 Install 2/4 Clutch Return Spring

1 – 2/4 CLUTCH RETURN SPRING

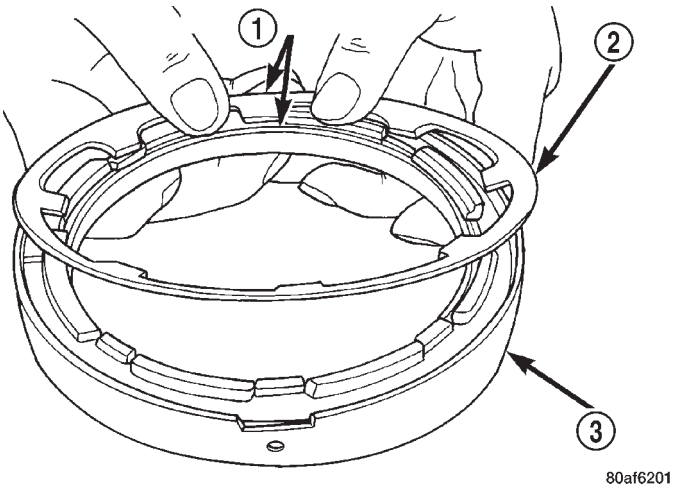

Fig. 358 Proper Orientation of 2/4 Clutch Retainer and Spring

1 – NOTE POSITION
2 – RETURN SPRING
3 – 2/4 CLUTCH RETAINER

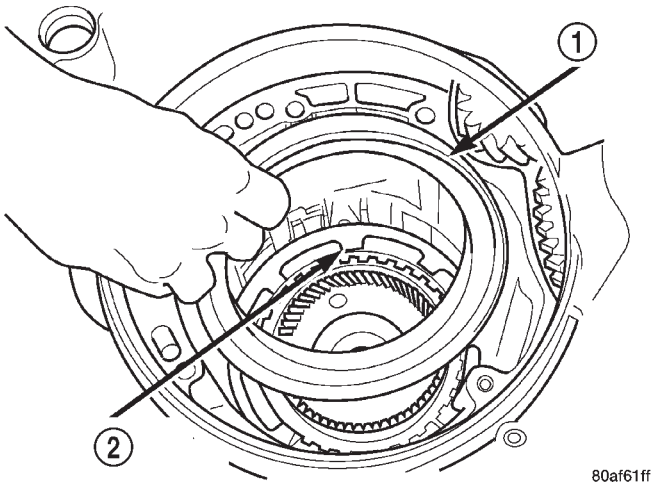

Fig. 359 Install 2/4 Clutch Retainer

1 – 2/4 CLUTCH RETAINER
2 – 2/4 CLUTCH RETURN SPRING

DISASSEMBLY AND ASSEMBLY (Continued)

NOTE: Verify that Miller Tool 5058 is centered properly to the 2/4 clutch retainer before depressing the tool.

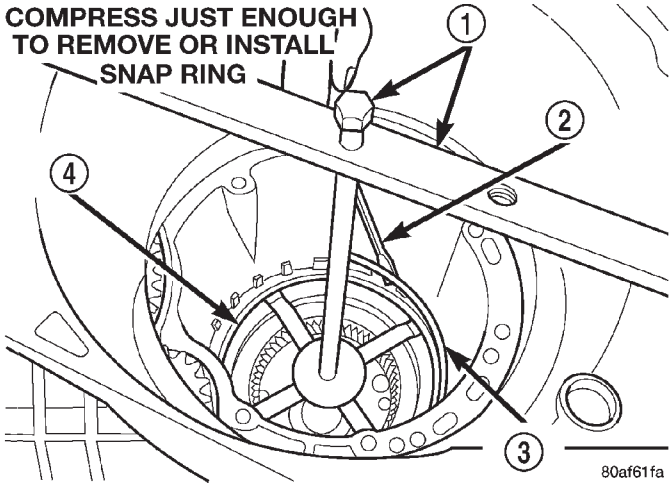

Fig. 360 Install 2/4 Clutch Retainer Snap Ring

1 – TOOL 5058
2 – SCREWDRIVER
3 – SNAP RING
4 – 2/4 CLUTCH RETAINER

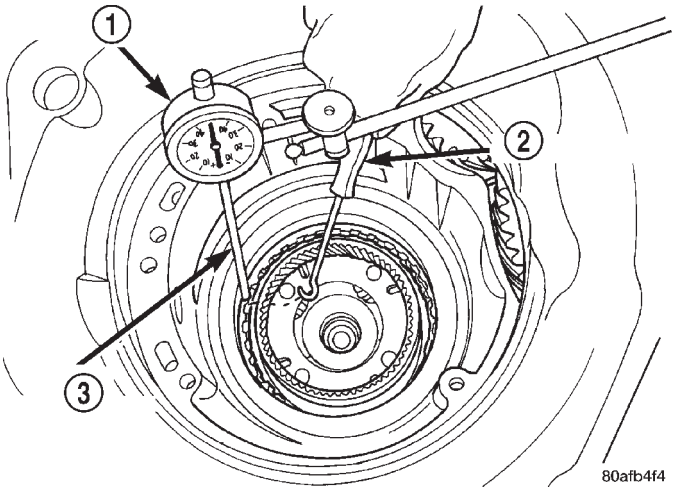

Fig. 361 Check 2/4 Clutch Clearance

1 – DIAL INDICATOR
2 – HOOK TOOL
3 – DIAL INDICATOR TIP TOOL 6268

Press down clutch pack with finger and zero dial indicator. **The 2/4 clutch pack clearance is 0.76 to 2.64mm (0.030 to 0.104 inch).** If not within specifications, the clutch is not assembled properly. **There is no adjustment for the 2/4 clutch clearance.**

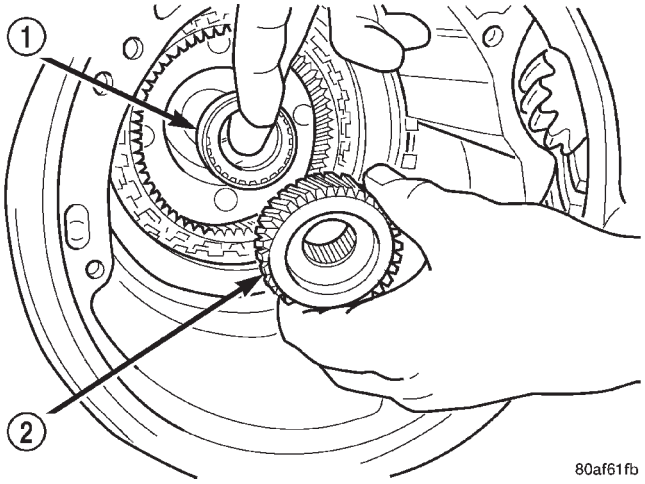

Fig. 362 Install Rear Sun Gear

1 – #7 NEEDLE BEARING
2 – REAR SUN GEAR

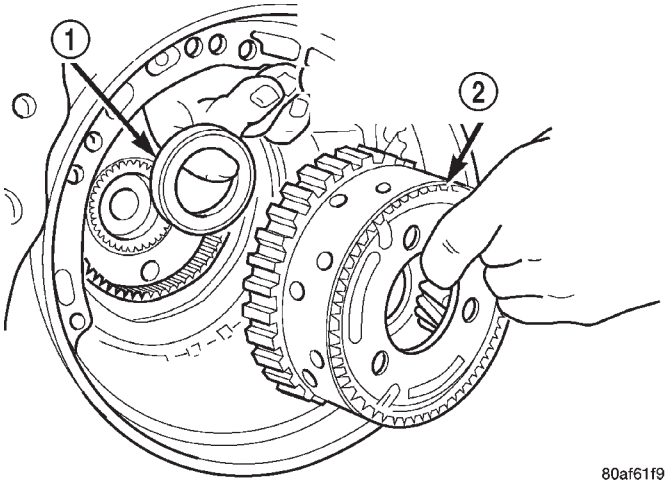

Fig. 363 Install Front Carrier and Rear Annulus Assembly

1 – #6 NEEDLE BEARING
2 – FRONT CARRIER AND REAR ANNULUS ASSEMBLY (TWIST AND PULL OR PUSH TO REMOVE OR INSTALL).

DISASSEMBLY AND ASSEMBLY (Continued)

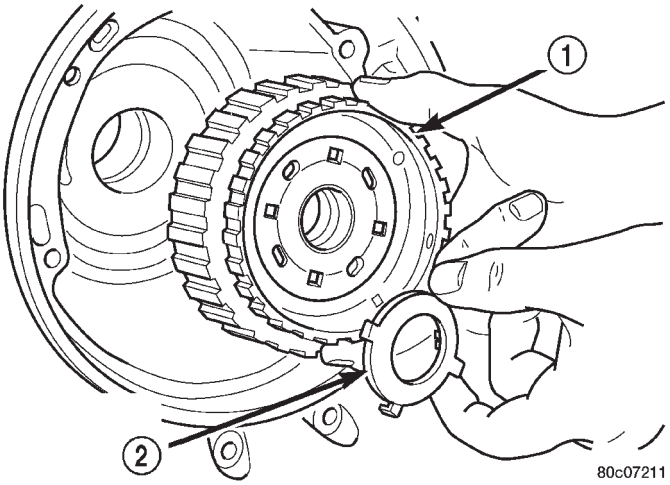

Fig. 364 Install Front Sun Gear Assembly

1 – FRONT SUN GEAR ASSEMBLY
2 – #4 THRUST WASHER (FOUR TABS)

DETERMINING No. 4 THRUST PLATE THICKNESS—INPUT SHAFT END PLAY

To determine the proper thickness of the No. 4 thrust plate, select the thinnest No. 4 thrust plate. Using petrolatum (Fig. 365) to hold thrust plate in position, install input clutch assembly. Be sure the input clutch assembly is completely seated (Fig. 366).

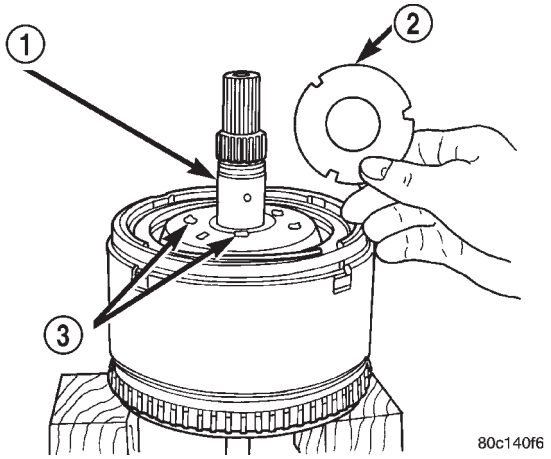

Fig. 365 Select Thinnest No. 4 Thrust Plate

1 – OVERDRIVE SHAFT ASSEMBLY
2 – #4 THRUST PLATE (SELECT)
3 – 3 DABS OF PETROLATUM FOR RETENTION

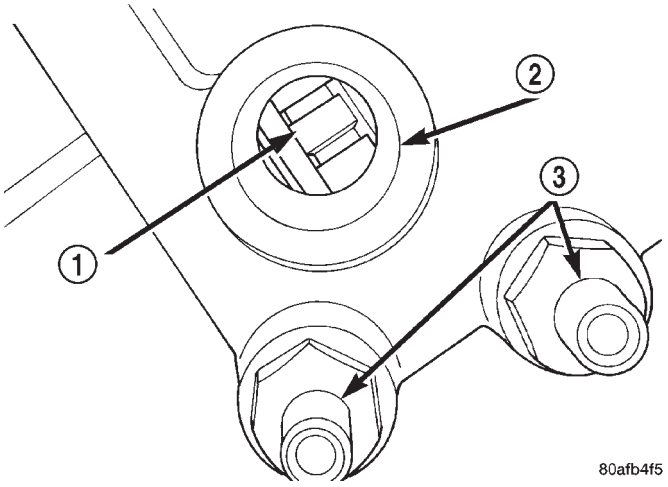

Fig. 366 View Through Input Speed Sensor Hole

1 – INPUT CLUTCHES RETAINER
2 – INPUT (TURBINE) SPEED SENSOR HOLE
3 – OIL COOLER NIPPLES

CAUTION: If view through input speed sensor hole is not as shown above, the input clutches assembly is not seated properly.

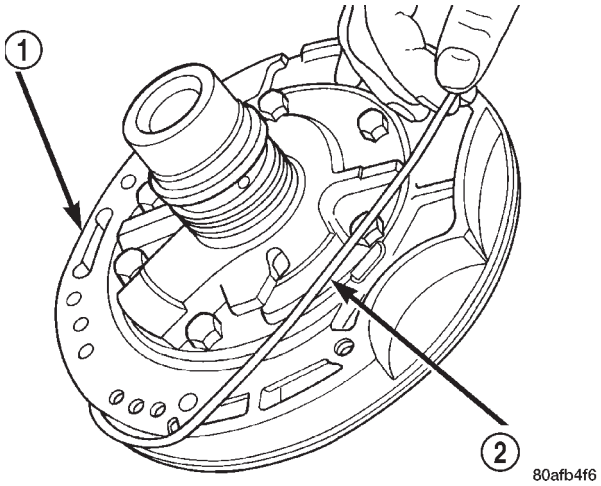

Fig. 367 Remove Oil Pump O-Ring

1 – OIL PUMP ASSEMBLY
2 – O-RING

Remove the oil pump O-ring (Fig. 367). You will be able to install and remove the oil pump and gasket very easily to select the proper No. 4 thrust plate.

DISASSEMBLY AND ASSEMBLY (Continued)

NOTE: Use screw-in dowels or phillips-head screwdrivers to align pump to case.

CAUTION: Be sure to reinstall O-ring on oil pump after selecting the proper No. 4 thrust plate.

Set up input shaft for measurement with Indicator Set C3339 and End Play Set 8266 as shown in (Fig. 368). Measure the input shaft end play with the transaxle in the vertical position. This will ensure that the measurement will be accurate.

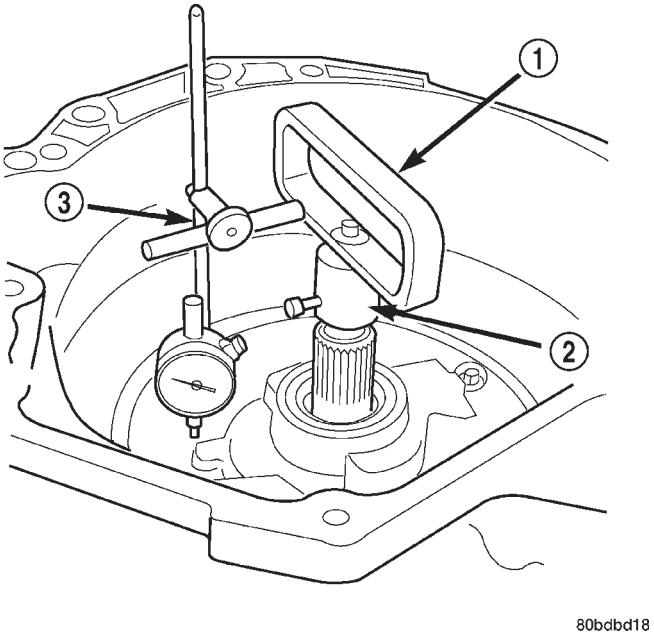

Fig. 368 Measure Input Shaft End Play Using End Play Set 8266

1 – TOOL 8266–8
2 – TOOL 8266–2
3 – TOOL C-3339

NOTE: Input shaft end play must be 0.005 to 0.025 inch.

For example, if end play reading is 0.055 inch, select No. 4 Thrust Plate which is 0.071 to 0.074 thick. This should provide an input shaft end play reading of 0.020 inch which is within specifications.

See chart to select the proper No. 4 thrust plate.

Reinstall the input clutch assembly with the selected thrust plate.

CAUTION: The cooler bypass valve must be replaced if a transaxle failure has occurred. Do not reuse old valve or attempt to clean old valve. When installing bypass valve, insert with O-ring end towards rear of case.

NO. 4 THRUST PLATE CHART

PART NUMBER	THICKNESS
4431662	0.91mm (0.036 in.)
4431663	1.14mm (0.045 in.)
4431664	1.37mm (0.054 in.)
4431665	1.60mm (0.063 in.)
3836237	1.73mm (0.068 in.)
4431666	1.80mm (0.071 in.)
3836238	1.96mm (0.077 in.)
4431667	2.03mm (0.080 in.)
3836239	2.16mm (0.085 in.)
4431668	2.24mm (0.088 in.)
3836240	2.39mm (0.094 in.)
4431669	2.46mm (0.097 in.)
3836241	2.62mm (0.103 in.)
4446670	2.67mm (0.105 in.)
4446671	2.90mm (0.114 in.)
4446672	3.15mm (0.124 in.)
4446601	3.38mm (0.133 in.)

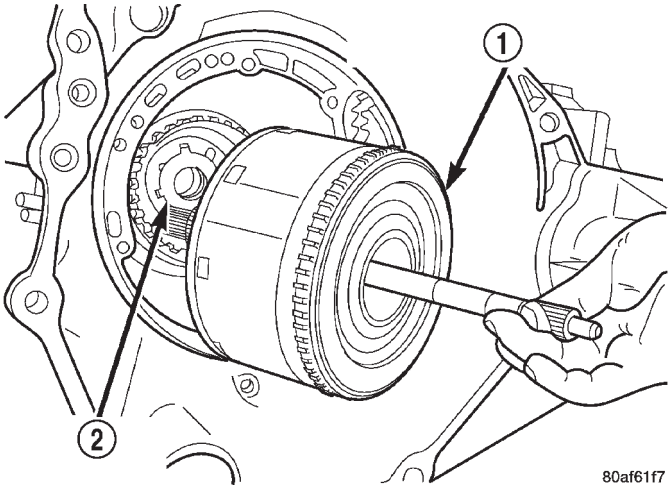

Fig. 369 Install Input Clutches Assembly

1 – INPUT CLUTCHES ASSEMBLY
2 – #4 THRUST WASHER

DISASSEMBLY AND ASSEMBLY (Continued)

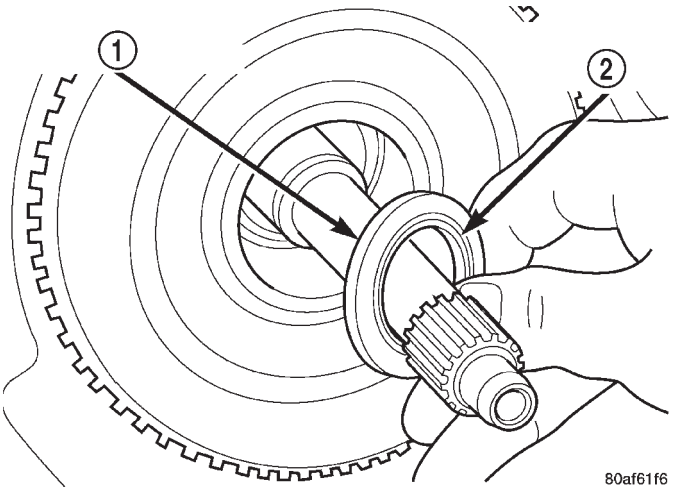

Fig. 370 Install Caged Needle Bearing

1 – #1 CAGED NEEDLE BEARING
2 – NOTE: TANGED SIDE OUT

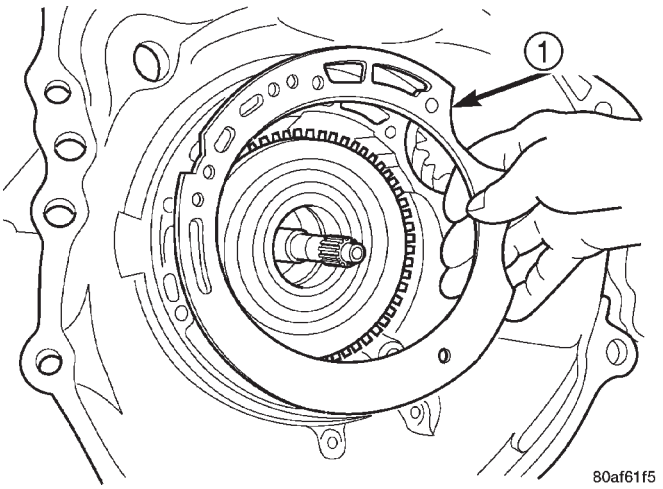

Fig. 372 Install Oil Pump Gasket

1 – PUMP GASKET

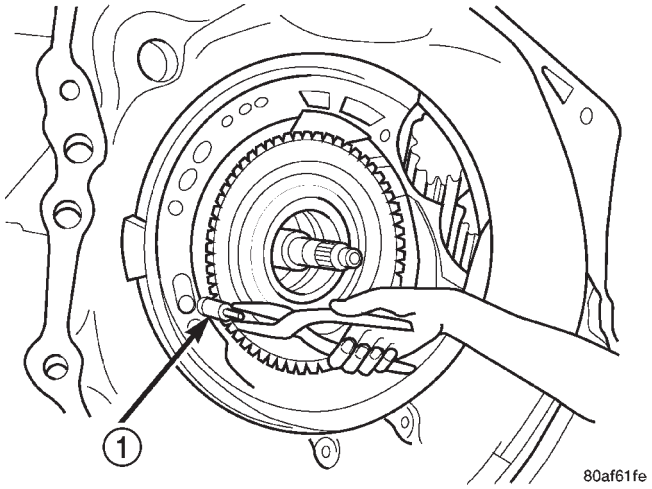

Fig. 371 Install Bypass Valve

1 – COOLER BYPASS VALVE

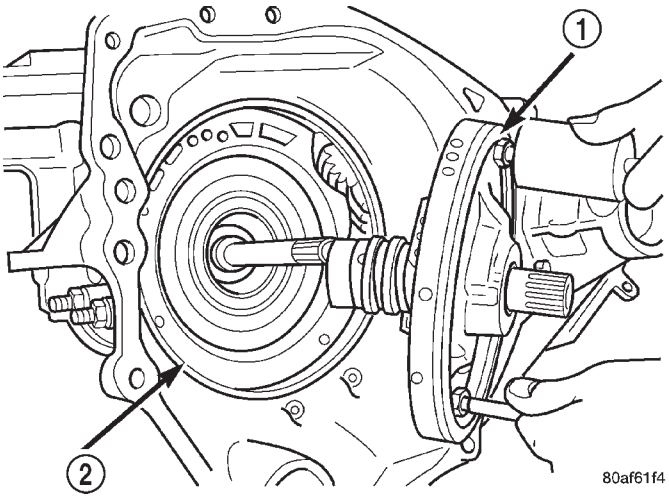

Fig. 373 Install Oil Pump

1 – OIL PUMP
2 – GASKET

DISASSEMBLY AND ASSEMBLY (Continued)

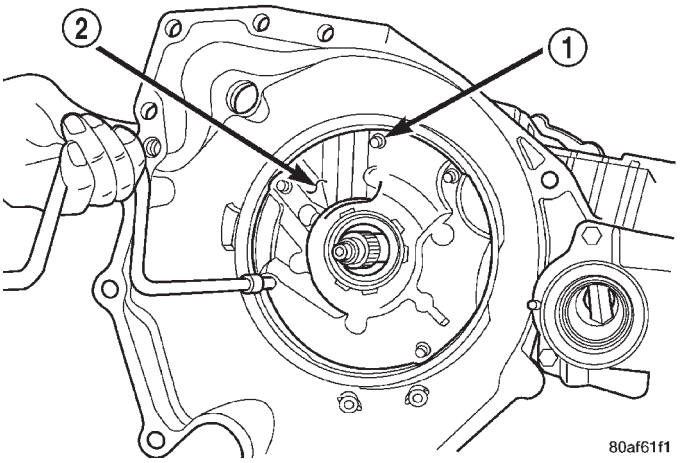

Fig. 374 Install Pump Attaching Bolts

1 – PUMP ATTACHING BOLTS
2 – PUMP HOUSING

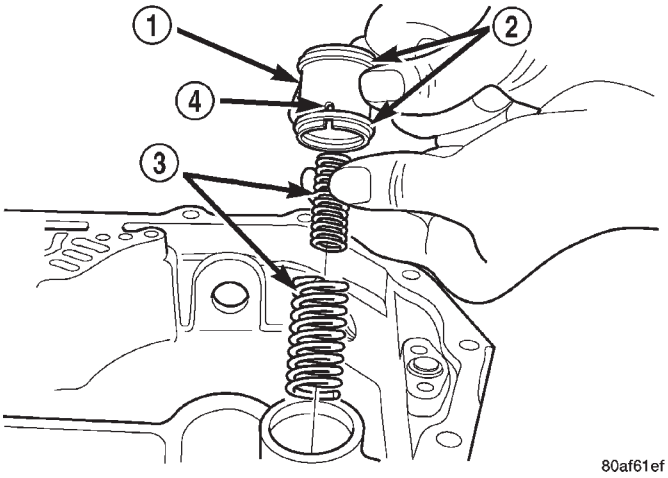

Fig. 375 Install Low/Reverse Accumulator

1 – ACCUMULATOR PISTON
2 – SEAL RINGS
3 – RETURN SPRINGS
4 – (NOTE NOTCH)

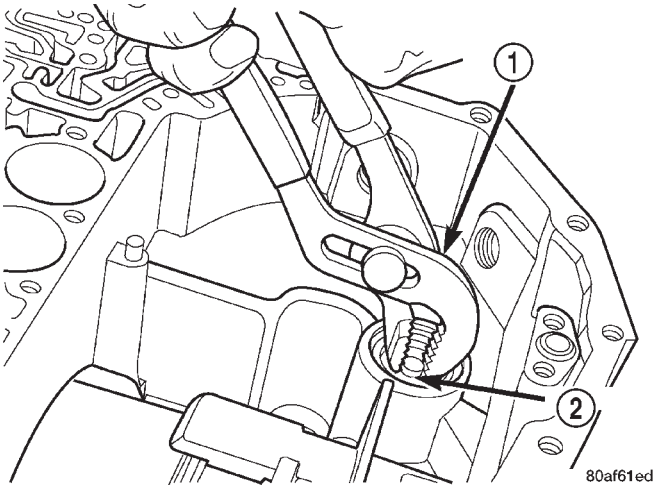

Fig. 376 Install Low/Reverse Accumulator Plug (Cover)

1 – ADJUSTABLE PLIERS
2 – PLUG

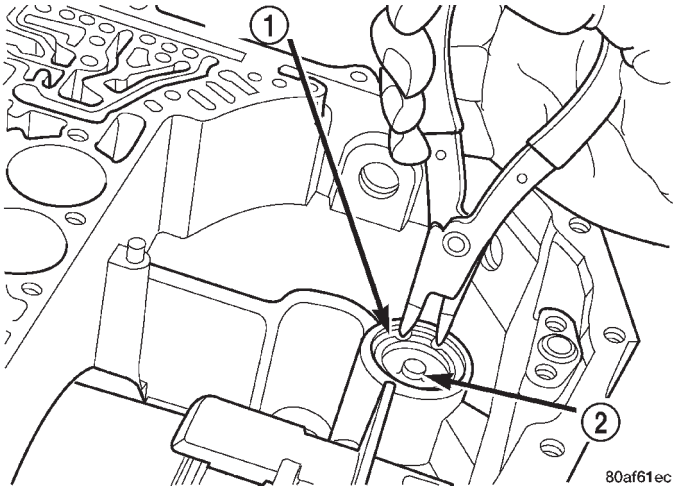

Fig. 377 Install Low/Reverse Accumulator Snap Ring

1 – SNAP RING
2 – PLUG

DISASSEMBLY AND ASSEMBLY (Continued)

NOTE: Dependent on engine application, some accumulators will have two springs and others will have one spring. The springs are color coded for application and year.

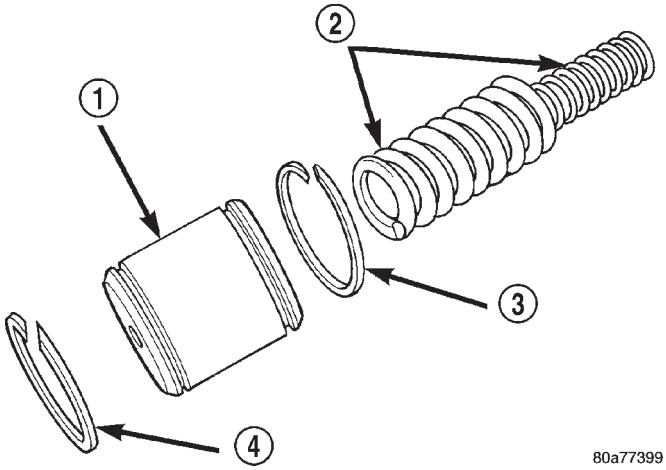

Fig. 378 Accumulator (Underdrive)

1 – ACCUMULATOR PISTON (UNDERDRIVE)
2 – RETURN SPRINGS
3 – SEAL RING
4 – SEAL RING

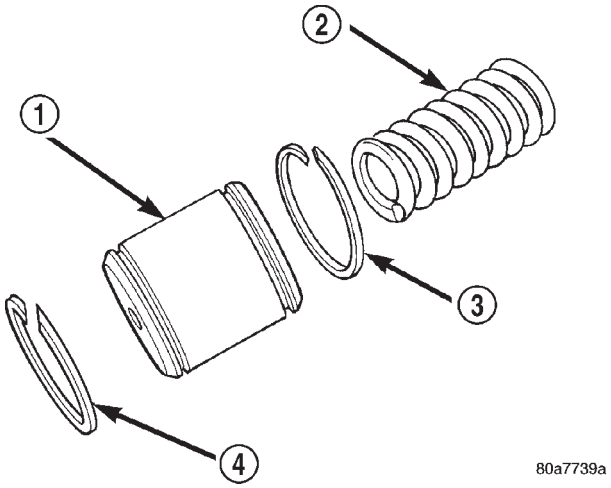

Fig. 379 Accumulator (Overdrive)

1 – ACCUMULATOR PISTON (OVERDRIVE)
2 – RETURN SPRING
3 – SEAL RING
4 – SEAL RING

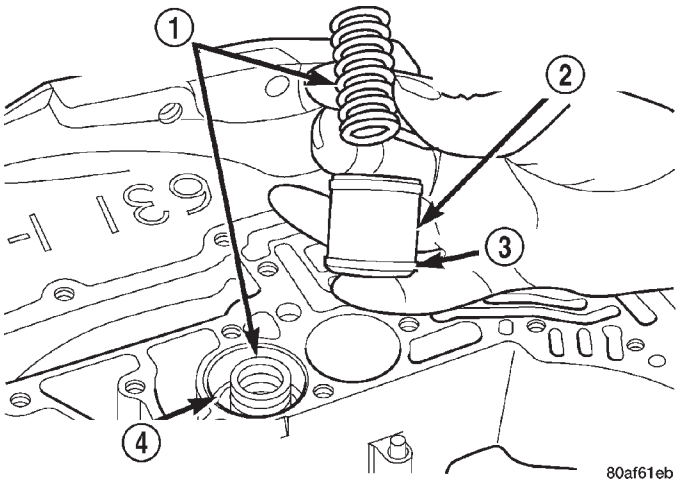

Fig. 380 Install Accumulators

1 – RETURN SPRING
2 – UNDERDRIVE CLUTCH ACCUMULATOR
3 – SEAL RING (2)
4 – OVERDRIVE CLUTCH ACCUMULATOR

NOTE: To ease installation of the valve body, turn the manual valve fully clockwise.

CAUTION: Do not handle the valve body from the manual valve. Damage could result.

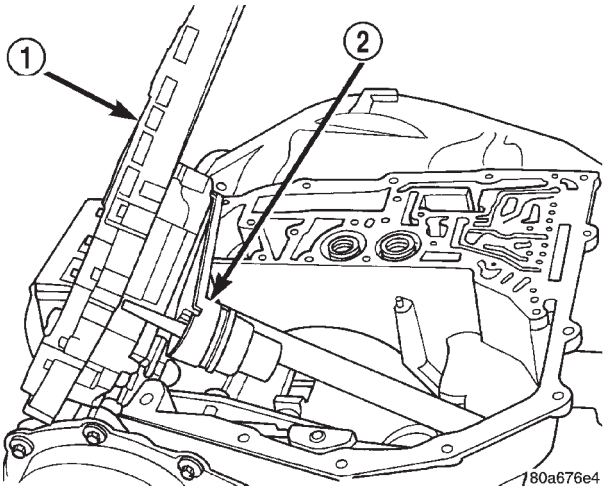

Fig. 381 Install Valve Body

1 – VALVE BODY
2 – TRANSMISSION RANGE SENSOR

DISASSEMBLY AND ASSEMBLY (Continued)

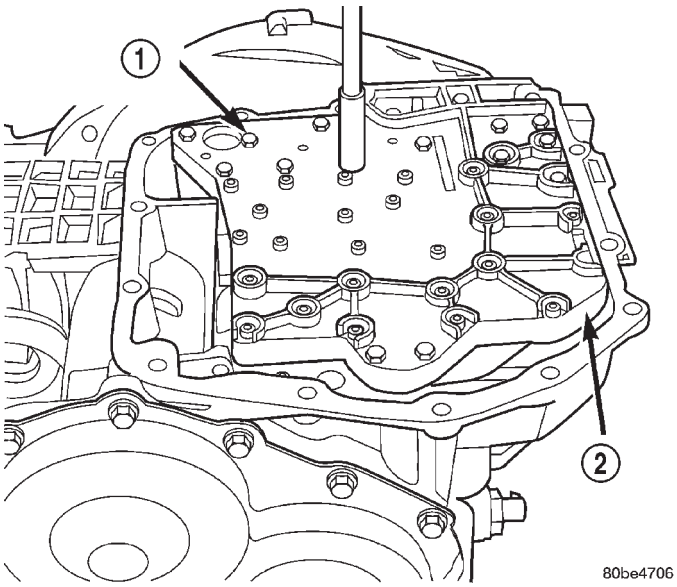

Fig. 382 Install Valve Body Attaching Bolts

1 – VALVE BODY ATTACHING BOLTS (18)
2 – VALVE BODY

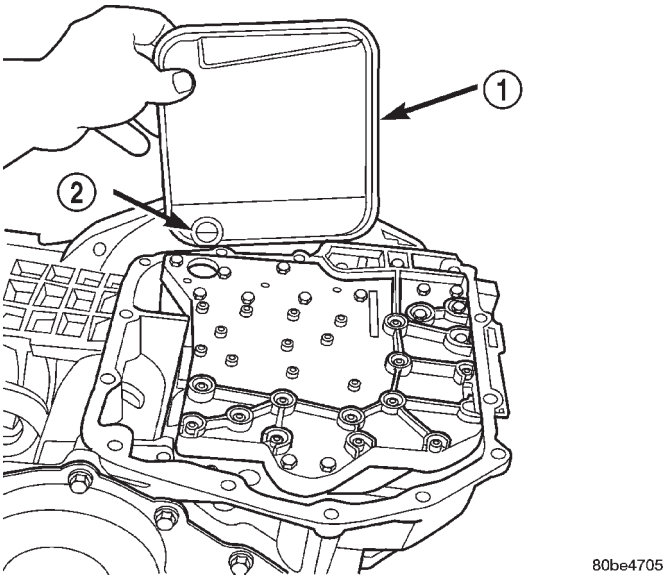

Fig. 383 Install Oil Filter and New O-Ring

1 – OIL FILTER
2 – O-RING

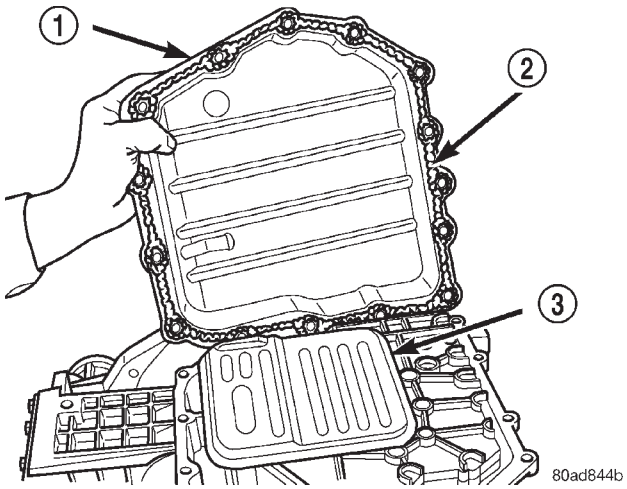

Fig. 384 Install Oil Pan

1 – OIL PAN
2 – 1/8 INCH BEAD OF RTV SEALANT
3 – OIL FILTER

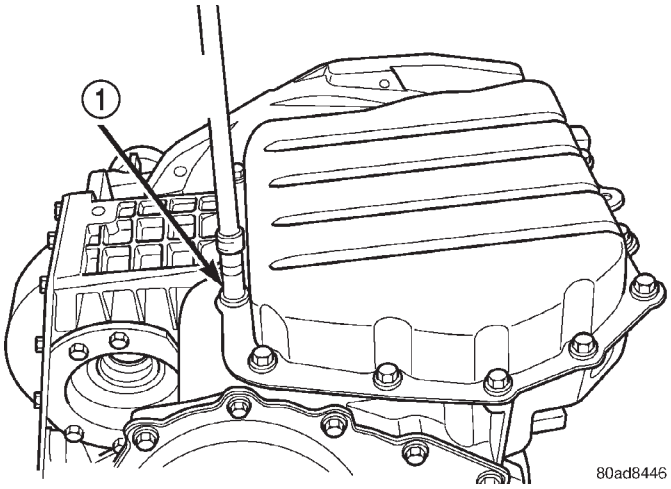

Fig. 385 Install Pan Bolts

1 – OIL PAN BOLTS (USE RTV UNDER BOLT HEADS)

DISASSEMBLY AND ASSEMBLY (Continued)

(1) Install transaxle solenoid pack and new gasket (Fig. 386).

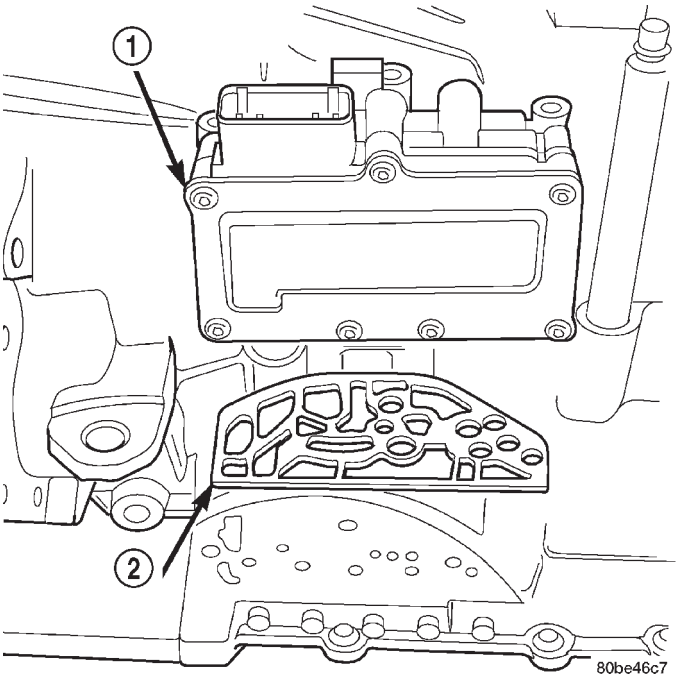

Fig. 386 Install Solenoid Pack

1 – SOLENOID/PRESSURE SWITCH ASSEMBLY
2 – GASKET

(2) Install and tighten solenoid/pressure switch assembly-to-transaxle case bolts to 12 N·m (110 in.) lbs.) torque (Fig. 387).

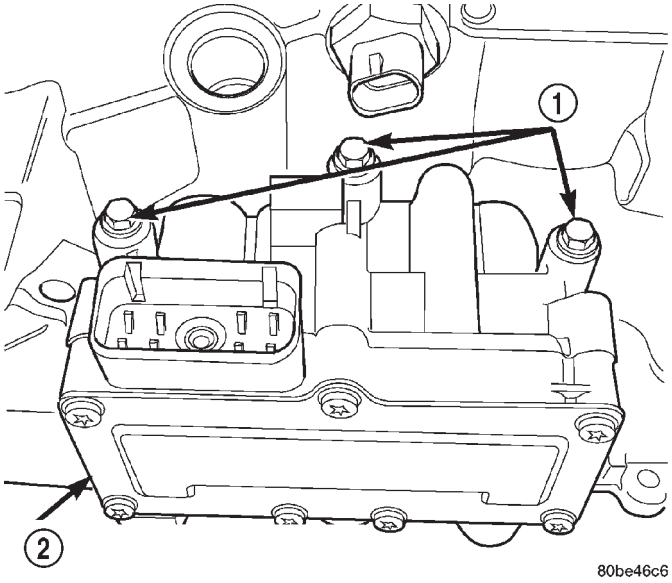

Fig. 387 Solenoid/Pressure Switch Assembly-to-Case Mounting Bolts

1 – BOLTS
2 – SOLENOID AND PRESSURE SWITCH ASSEMBLY

DIFFERENTIAL REPAIR

NOTE: The differential is serviced as an assembly. The only parts that are serviceable within the differential are the differential bearing cups and cones. If any other part fails within the differential, you must replace the differential assembly along with the transfer shaft.

DISASSEMBLY

The transfer shaft should be removed for differential repair and bearing turning torque checking.

(1) Remove the differential cover and bolts (Fig. 388) (Fig. 389).

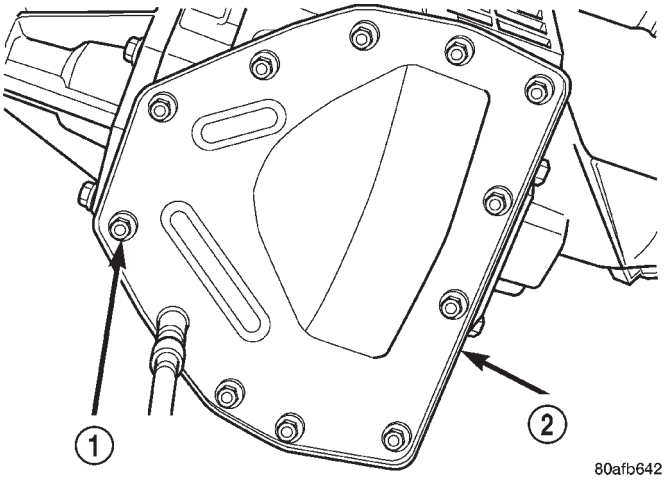

Fig. 388 Differential Cover Bolts

1 – DIFFERENTIAL COVER BOLTS
2 – DIFFERENTIAL COVER

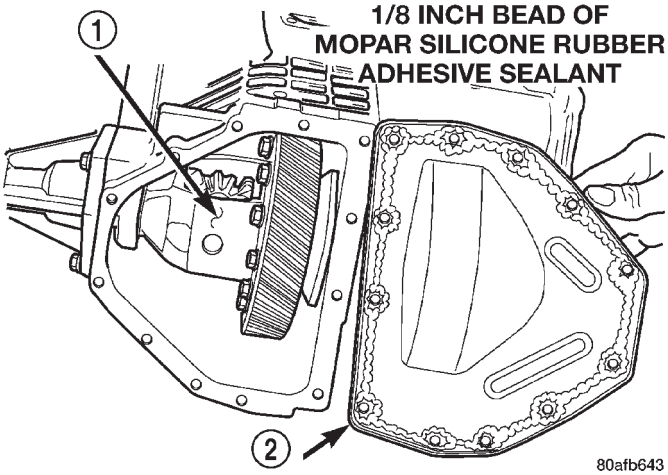

Fig. 389 Remove Differential Cover

1 – DIFFERENTIAL ASSEMBLY
2 – DIFFERENTIAL COVER

DISASSEMBLY AND ASSEMBLY (Continued)

(2) Remove the differential bearing retainer and bolts (Fig. 390) (Fig. 391).

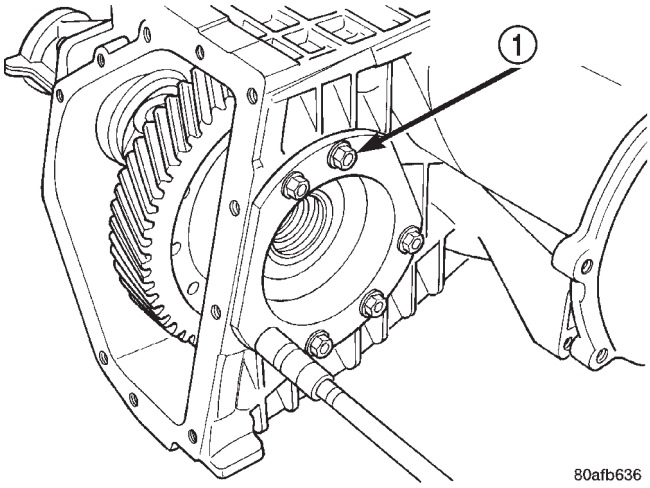

Fig. 390 Differential Retainer Bolts

1 – DIFFERENTIAL RETAINER BOLTS

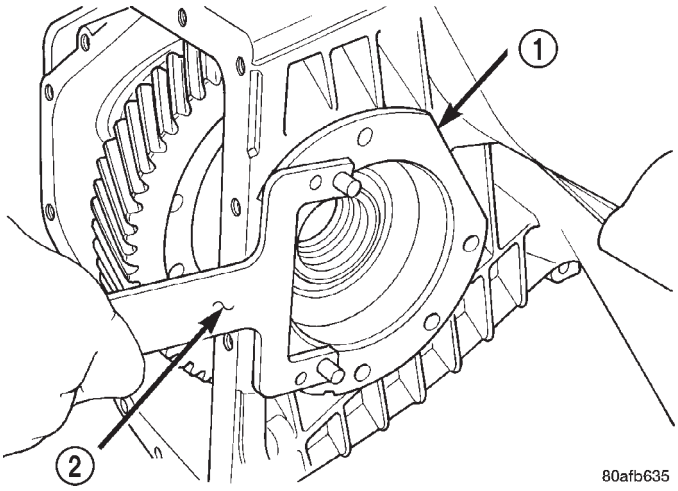

Fig. 391 Remove Bearing Retainer

1 – DIFFERENTIAL BEARING RETAINER
2 – TOOL L-4435

(3) Using a plastic hammer, remove extension housing/adapter plate on the right side of the transaxle.

WARNING: HOLD ONTO DIFFERENTIAL ASSEMBLY TO PREVENT IT FROM ROLLING OUT OF HOUSING.

(4) Use Miller Special Tool 5048, 5048-3 Collets, and L-4539-2 Button to remove the differential bearing cone on the extension housing side.

(5) Use Miller Special Tool 5048, 5048-4 Collets, and L-4539-2 Button to remove the differential bearing cone on the bearing retainer side (Fig. 392) (Fig. 393) (Fig. 394).

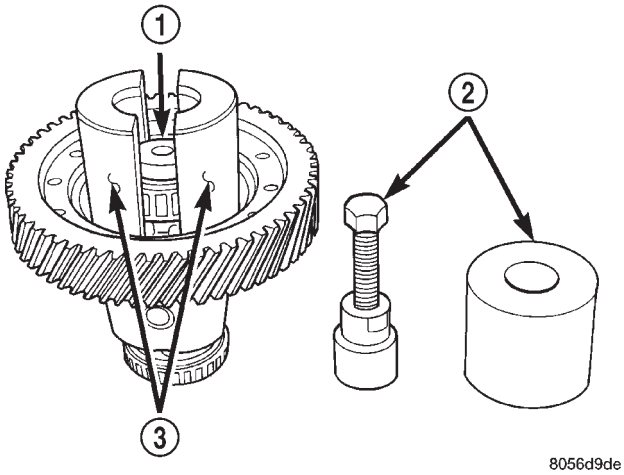

Fig. 392 Position Button and Collets Onto Differential and Bearing (Ring Gear Side)

1 – SPECIAL TOOL L-4539-2
2 – SPECIAL TOOL 5048
3 – SPECIAL TOOL 5048-4

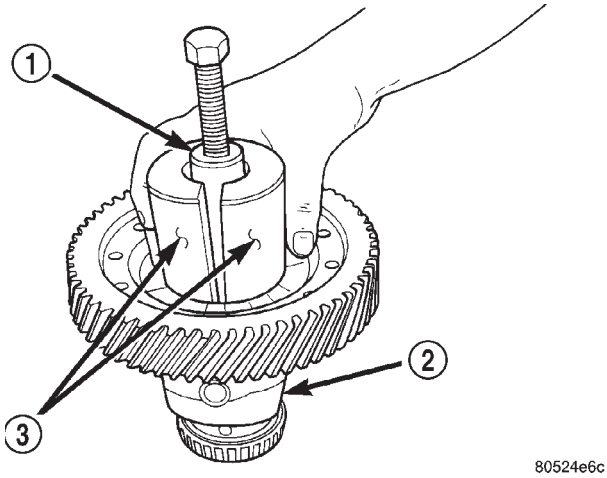

Fig. 393 Position Tool 5048 Over Button and Collets at Differential Bearing (Ring Gear Side)

1 – SPECIAL TOOL 5048
2 – DIFFERENTIAL
3 – SPECIAL TOOL 5048-4

DISASSEMBLY AND ASSEMBLY (Continued)

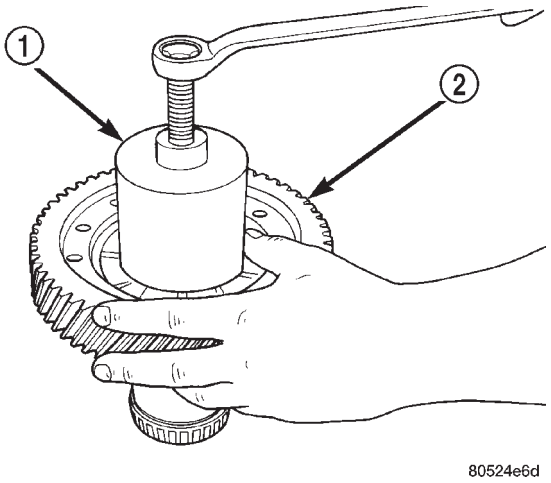

Fig. 394 Remove Differential Bearing Cone (Ring Gear Side)

1 – SPECIAL TOOL 5048
2 – RING GEAR

(6) Using Miller Special Tool L-4518, remove the differential bearing race from the extension housing.

(7) Using Miller Special Tool 6062A, remove the differential bearing race from the bearing retainer (Fig. 395) (Fig. 396).

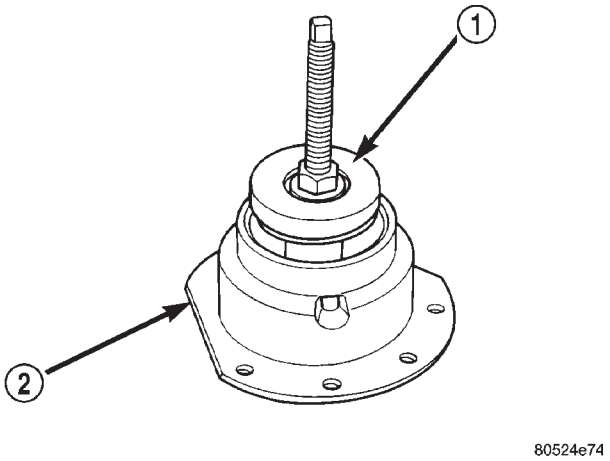

Fig. 395 Position Bearing Cup Remover Tool in Retainer

1 – SPECIAL TOOL 6062A
2 – DIFFERENTIAL BEARING RETAINER

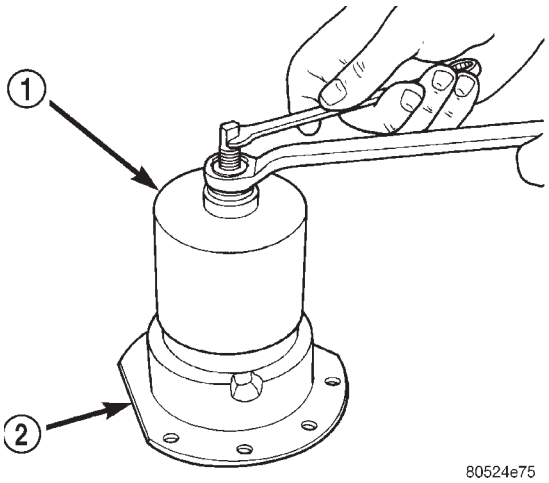

Fig. 396 Remove Bearing Cup

1 – SPECIAL TOOL 6062A
2 – DIFFERENTIAL BEARING RETAINER

DIFFERENTIAL SERVICE TOOLS

COMPONENT	REMOVER	INSTALLER
Diff. Bear. On Retainer Side	5048, 5048-4 Collets, L-4539-2 Button	5052, C-4171
Diff. Bear. On Ext. Hous. Side	5048, 5048-3 Collets, L-4539-2 Button	L-4410, C-4171
Diff. Race. On Retainer Side	6062-A	6061, C-4171
Diff. Race. On Ext. Hous. Side	L-4518	L-4520, C-4171
Extension Housing Seal	7794-A, C-637 Slide Hammer	L-4520, C-4171
Bearing Retainer Seal	794-A, C-637 Slide Hammer	L-4520, C-4171

CHECKING SIDE GEAR END PLAY

Check side gear end play whenever the differential is removed for service.

DISASSEMBLY AND ASSEMBLY (Continued)

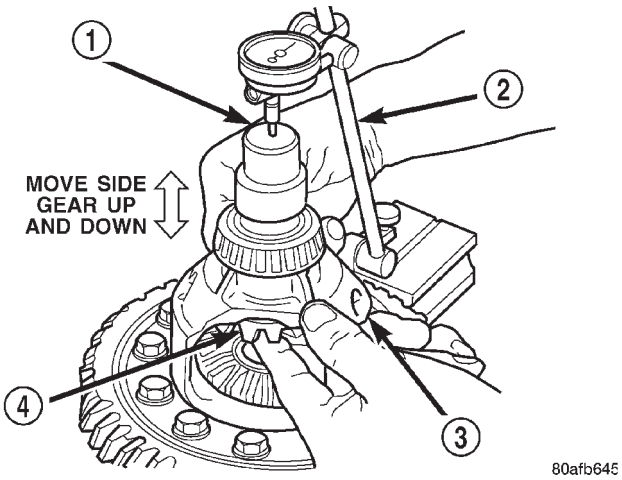

Fig. 397 Checking Side Gear End Play (Extension Housing Side)

1 – SPECIAL TOOL C-4996 (NOTE POSITION)
2 – DIAL INDICATOR SET
3 – DIFFERENTIAL ASSEMBLY
4 – SIDE GEAR

NOTE: Side gear end play must be BETWEEN 0.001 to 0.013 inch.

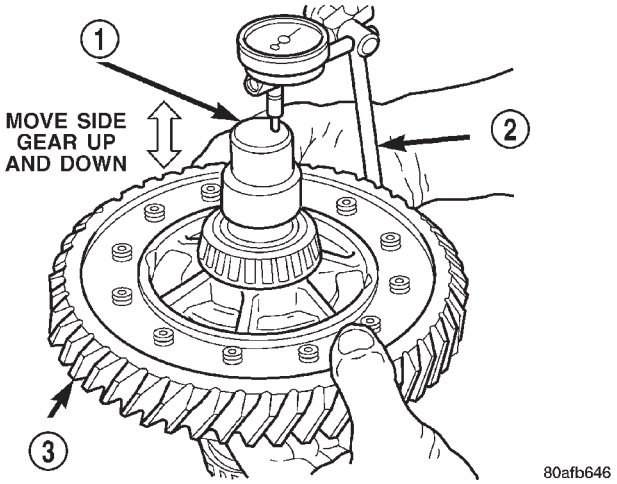

Fig. 398 Checking Side Gear End Play (Bearing Retainer Side)

1 – SPECIAL TOOL C-4996 (NOTE POSITION)
2 – DIAL INDICATOR SET
3 – DIFFERENTIAL ASSEMBLY

ASSEMBLY

NOTE: Use Mopar® Silicone Rubber Adhesive Sealant, or equivalent, on retainer and extension housing/adapter plate to seal to case.

(1) Using Miller Special Tool L-4410, and C-4171, install differential bearing to differential (extension housing side) (Fig. 399).

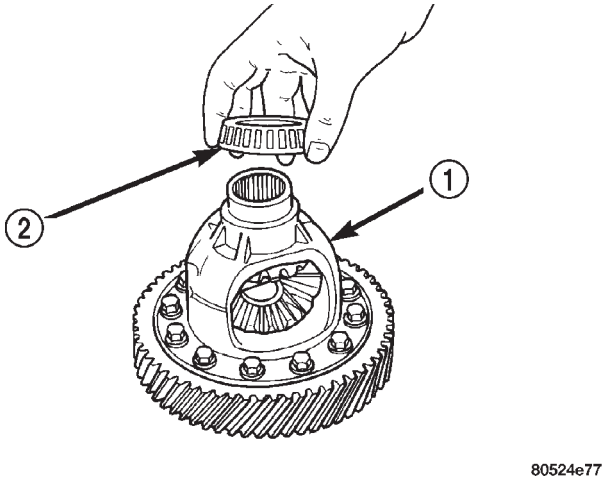

Fig. 399 Position Bearing Cone Onto Differential

1 – DIFFERENTIAL ASSEMBLY
2 – DIFFERENTIAL BEARING

(2) Using Miller Special Tool 5052 and C-4171, install differential bearing to differential (bearing retainer side).

(3) Using Miller Special Tool 6061 and C-4171, install differential bearing race to bearing retainer (Fig. 400).

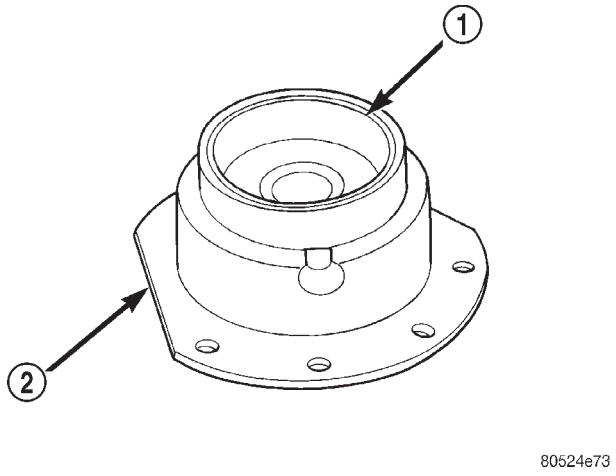

Fig. 400 Differential Bearing Retainer

1 – DIFFERENTIAL BEARING CUP
2 – DIFFERENTIAL BEARING RETAINER

(4) Using Miller Special Tool L–4520 and C-4171, install differential bearing to extension housing.

DISASSEMBLY AND ASSEMBLY (Continued)

DIFFERENTIAL BEARING PRELOAD ADJUSTMENT

NOTE: Perform all differential bearing preload measurements with the transfer shaft and gear removed.

DIFFERENTIAL BEARING PRELOAD ADJUSTMENT USING EXISTING SHIM

(1) Position the transaxle assembly vertically on the support stand, differential bearing retainer side up.

(2) Install Tool L-4436A into the differential and onto the pinion mate shaft (Fig. 401).

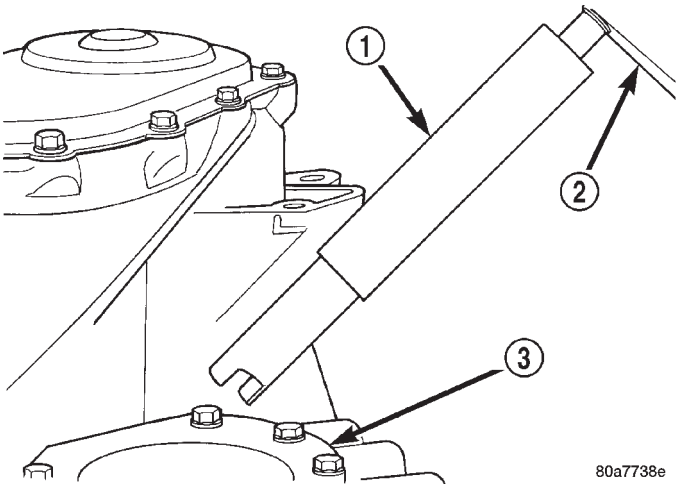

Fig. 401 Tool L-4436 and Torque Wrench

1 – SPECIAL TOOL L-4436–A
2 – TORQUE WRENCH
3 – DIFFERENTIAL BEARING RETAINER

(3) Rotate the differential at least one full revolution to ensure the tapered roller bearings are fully seated.

(4) Using Tool L-4436A and an inch-pound torque wrench, check the turning torque of the differential (Fig. 402). **The turning torque should be between 5 and 18 inch-pounds.**

(5) If the turning torque is within specifications, remove tools. Setup is complete.

(6) If turning torque is not within specifications proceed with the following steps.

(a) Remove differential bearing retainer from the transaxle case.

(b) Remove the bearing cup from the differential bearing retainer using Tool 6062A.

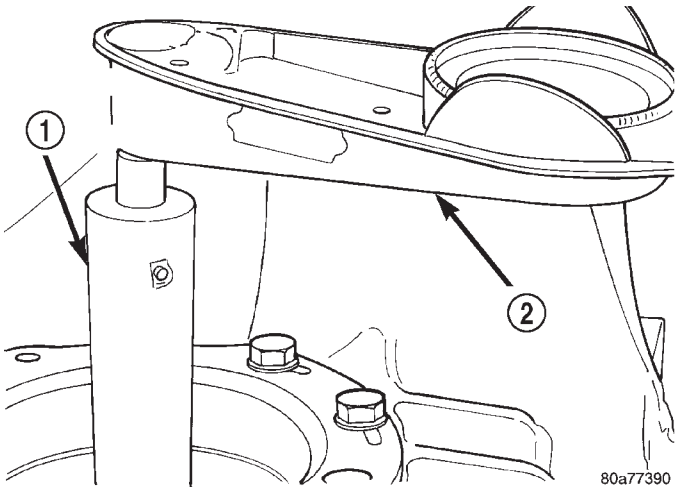

Fig. 402 Checking Differential Bearings Turning Torque

1 – SPECIAL TOOL L-4436–A
2 – TORQUE WRENCH

(c) Remove the existing shim from under the cup.

(d) Measure the existing shim.

(e) If the turning torque was too high when measured, install a.05 mm (.002 inch) thinner shim. If the turning torque is was too low, install a.05 mm (.002 inch) thicker shim. Repeat until 5 to 18 inch-pounds turning torque is obtained. Oil Baffle is not required to be installed when making shim selection.

(f) Install the proper shim under the bearing cup. Make sure the oil baffle is installed properly in the bearing retainer, below the bearing shim and cup.

(g) Install the differential bearing retainer using Tool 5052 and C-4171. Seal the retainer to the housing with MOPAR® Adhesive Sealant and torque bolts to 28 N·m (250 in. lbs.).

(7) Using Tool L-4436A and an inch-pound torque wrench, recheck the turning torque of the differential (Fig. 402). **The turning torque should be between 5 and 18 inch-pounds.**

Shim thickness need be determined only if any of the following parts are replaced:

- Transaxle case
- Differential carrier
- Differential bearing retainer
- Extension housing
- Differential bearing cups and cones

DISASSEMBLY AND ASSEMBLY (Continued)

DIFFERENTIAL BEARING SHIM CHART

PART NUMBER	SHIM THICKNESS	
	MM	INCH
4659257	.980	0.0386
4659258	1.02	0.0402
4659259	1.06	0.0418
4659260	1.10	0.0434
4659261	1.14	0.0449
4659262	1.18	0.0465
4659263	1.22	0.0481
4659264	1.26	0.0497
4659265	1.30	0.0512
4659266	1.34	0.0528
4659267	1.38	0.0544
4659268	1.42	0.0560
4659269	1.46	0.0575
4659270	1.50	0.0591
4659271	1.54	0.0607
4659272	1.58	0.0623
4659273	1.62	0.0638
4659274	1.66	0.0654
4659275	1.70	0.0670
4659283	2.02	0.0796
4659284	2.06	0.0812

PRELOAD ADJUSTMENT W/O SHIM

(1) Remove the bearing cup from the differential bearing retainer using Miller special Tool 6062A.

(2) Remove existing shim from under bearing cup.

(3) Reinstall the bearing cup into the retainer using Miller Special Tool 6061, and C-4171.

NOTE: Oil baffle is not required when making the shim calculation.

(4) Install the bearing retainer into the case. Torque bolts to 28 N·m (250 in. lbs.).

(5) Position the transaxle assembly vertically on the support stand and install Miller Special Tool L-4436-A into the bearing retainer.

(6) Rotate the differential at least one full revolution to ensure the tapered roller bearings are fully seated.

(7) Attach a dial indicator to the case and zero the dial. Place the tip on the end of Special Tool L-4436-A.

(8) Place a large screwdriver to each side of the ring gear and lift. Check the dial indicator for the amount of end play.

CAUTION: Do not damage the transaxle case and/or differential retainer sealing surface.

(9) Using the end play measurement that was determined, add.18mm (.007 inch). This should give you between 5 and 18 inch pounds of bearing preload. Refer to the Differential Bearing Shim Chart to determine which shim to use.

(10) Remove the differential bearing retainer. Remove the bearing cup.

(11) Install the oil baffle. Install the proper shim combination under the bearing cup.

(12) Install the differential bearing retainer. Seal the retainer to the housing with Mopar® Silicone Rubber Adhesive Sealant. Torque bolts to 28 N·m (250 in. lbs.).

(13) Using Miller Special Tool L-4436-A and an inch-pound torque wrench, check the turning torque

DISASSEMBLY AND ASSEMBLY (Continued)

of the differential (Fig. 402). The turning torque should be between 5-18 inch-pounds.

NOTE: If turning torque is too high install a .05mm (.002 inch) thicker shim. If the turning torque is too low, install a .05mm (.002 inch) thinner shim. Repeat until 5-18 inch-pounds of turning torque is obtained.

CLEANING AND INSPECTION

CLEANING VALVE BODY

Prior to removing any transaxle parts, plug all openings and clean unit, preferably by steam. Cleanliness through entire disassembly and assembly cannot be overemphasized. When disassembling, each part should be washed in a suitable solvent, then dried by compressed air. **Do not wipe parts with shop towels.** All mating surfaces in the transaxles are accurately machined; therefore, careful handling of all parts must be exercised to avoid nicks or burrs.

NOTE: Tag all springs, as they are removed, for reassembly identification.

ADJUSTMENTS

GEARSHIFT CABLE

The engine starter should only operate when the transaxle shift lever is in the PARK (P) or NEUTRAL (N) positions. If the engine starts in any other gear position, or the vehicle rolls when the shifter is in gated PARK (P), a gearshift cable adjustment is necessary.

ADJUSTMENT

(1) Loosen set screw and remove knob from shifter handle (Fig. 403).

(2) Remove the center console assembly as shown in (Fig. 404).

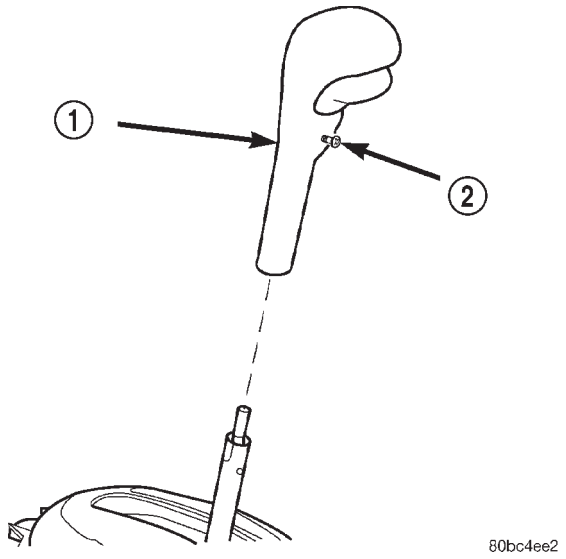

Fig. 403 Gearshift Knob Removal/Installation

1 – SHIFTER KNOB
2 – SET SCREW

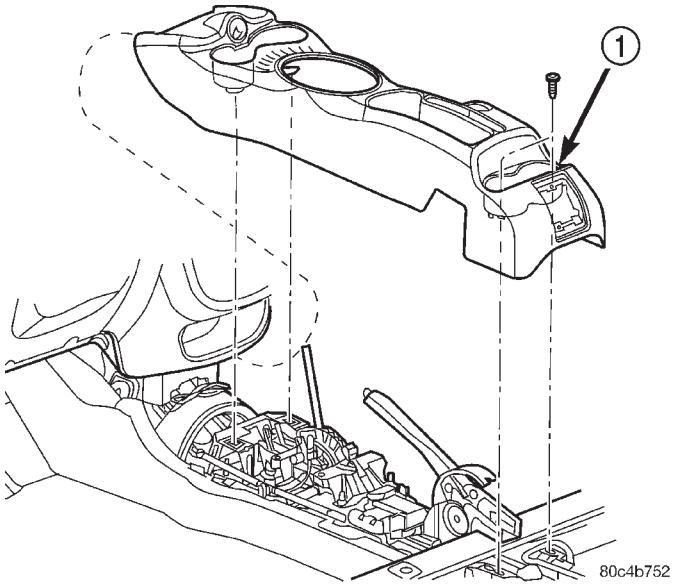

Fig. 404 Center Console Removal/Installation

1 – CENTER CONSOLE

ADJUSTMENTS (Continued)

(3) **Adjust gearshift cable as follows:**

(a) Place gearshift lever in the PARK (P) position.

(b) Loosen shift cable adjustment screw (Fig. 405).

(c) Move transaxle manual lever to the PARK. Verify transaxle is in PARK by attempting to roll vehicle in either direction.

(d) Tighten shift cable adjustment screw to 8 N·m (70 in. lbs.) torque.

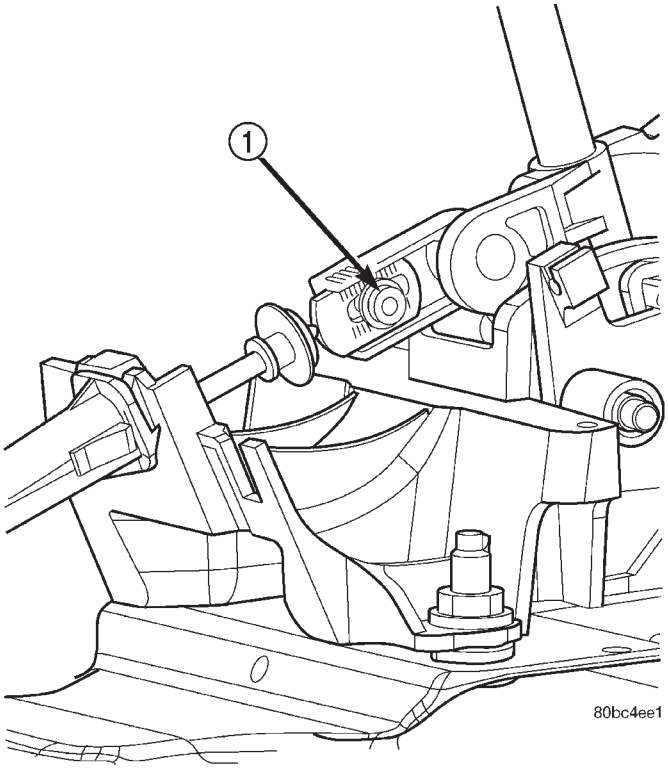

Fig. 405 Gearshift Cable Adjustment Screw

1 – GEARSHIFT CABLE ADJUSTMENT SCREW

(4) Verify proper cable adjustment. Engine should start with the shifter lever in PARK (P) and NEUTRAL (N) positions ONLY.

(5) Install center console assembly (Fig. 404).

(6) Install gearshift knob and tighten set screw to 2 N·m (17 in. lbs.) torque (Fig. 403).

BRAKE/TRANSMISSION SHIFT INTERLOCK SYSTEM

VERIFICATION

The following chart describes the normal operation of the Brake Transmission Shift Interlock (BTSI) system. If the “expected response” differs from the vehicle’s response, then system repair and/or adjustment is necessary.

ACTION	EXPECTED RESPONSE
1. Turn key to the “OFF” position.	1. Shifter CAN be shifted out of park.
2. Turn key to the “ON/RUN” position.	2. Shifter CANNOT be shifted out of park.
3. Turn key to the “ON/RUN” position and depress the brake pedal.	3. Shifter CAN be shifted out of park.
4. Leave shifter in any gear and try to return key to the “LOCK” or ″ACC” position.	4. Key cannot be returned to the “LOCK” or “ACC” position.
5. Return shifter to “PARK” and try to remove the key.	5. Key can be removed (after returning to “LOCK” position).
6. With the key removed, try to shift out of “PARK”.	6. Shifter cannot be shifted out of “PARK”.
NOTE: Any failure to meet these expected responses requires system adjustment or repair.	

ADJUSTMENT

(1) Loosen set screw and remove knob from shifter handle (Fig. 406).

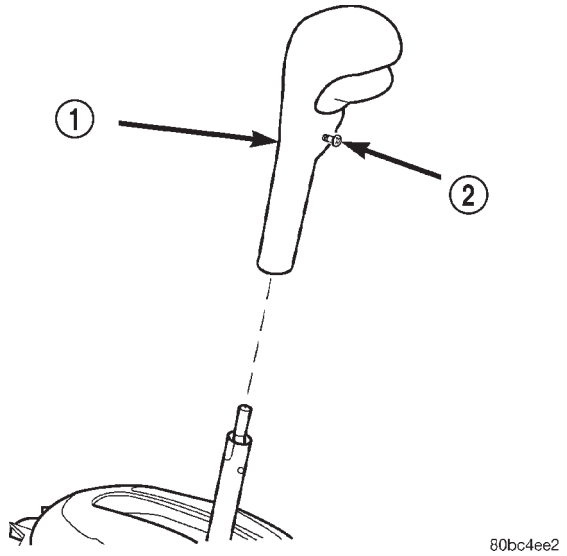

Fig. 406 Gearshift Knob Removal/Installation

1 – SHIFTER KNOB

2 – SET SCREW

ADJUSTMENTS (Continued)

(2) Remove the center console assembly as shown in (Fig. 407).

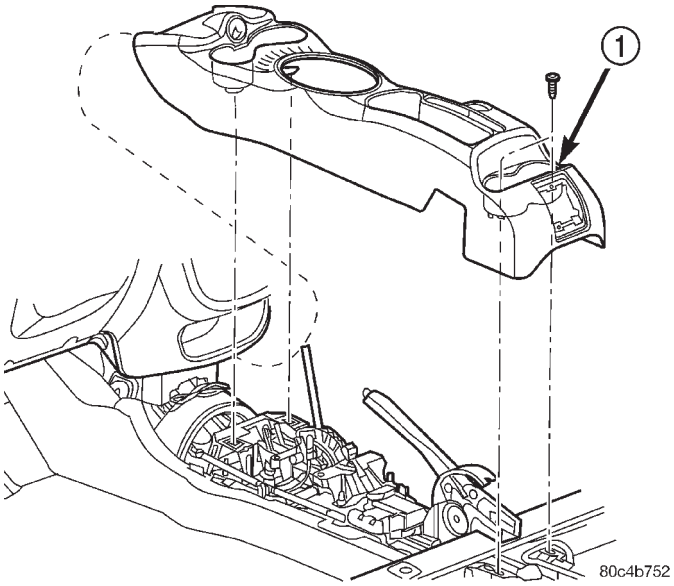

Fig. 407 Center Console Removal/Installation

1 – CENTER CONSOLE

(3) Remove shifter bezel (Fig. 408).

(4) **Adjust interlock cable/system as follows:** Pry up on cable adjuster lock to release and allow cable to “self-adjust”. Lock cable adjustment by pressing down on the adjuster lock until bottomed at the cable housing.

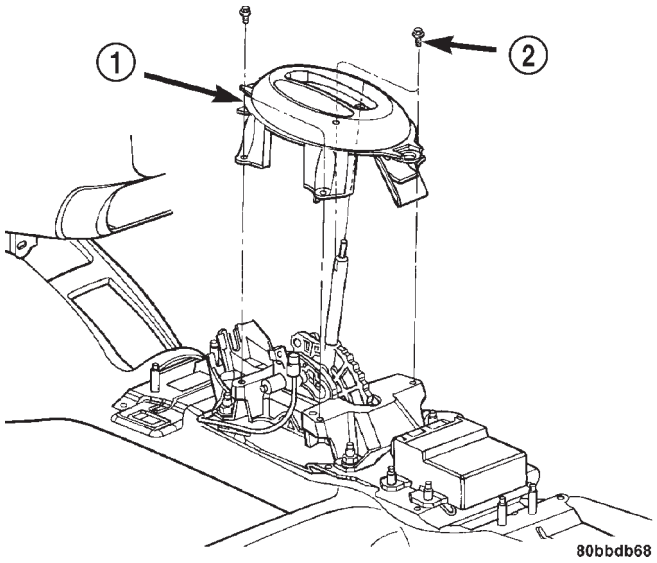

Fig. 408 Shifter Bezel Removal/Installation

1 – BEZEL
2 – SCREW (4)

(5) Verify correct system operation. Refer to verification procedure.

(6) Install shifter bezel (Fig. 408).

(7) Install center console assembly (Fig. 407).

(8) Install gearshift knob and tighten set screw to 2 N·m (17 in. lbs.) torque (Fig. 406).

SCHEMATICS AND DIAGRAMS

41TE TRANSAXLE HYDRAULIC SCHEMATICS

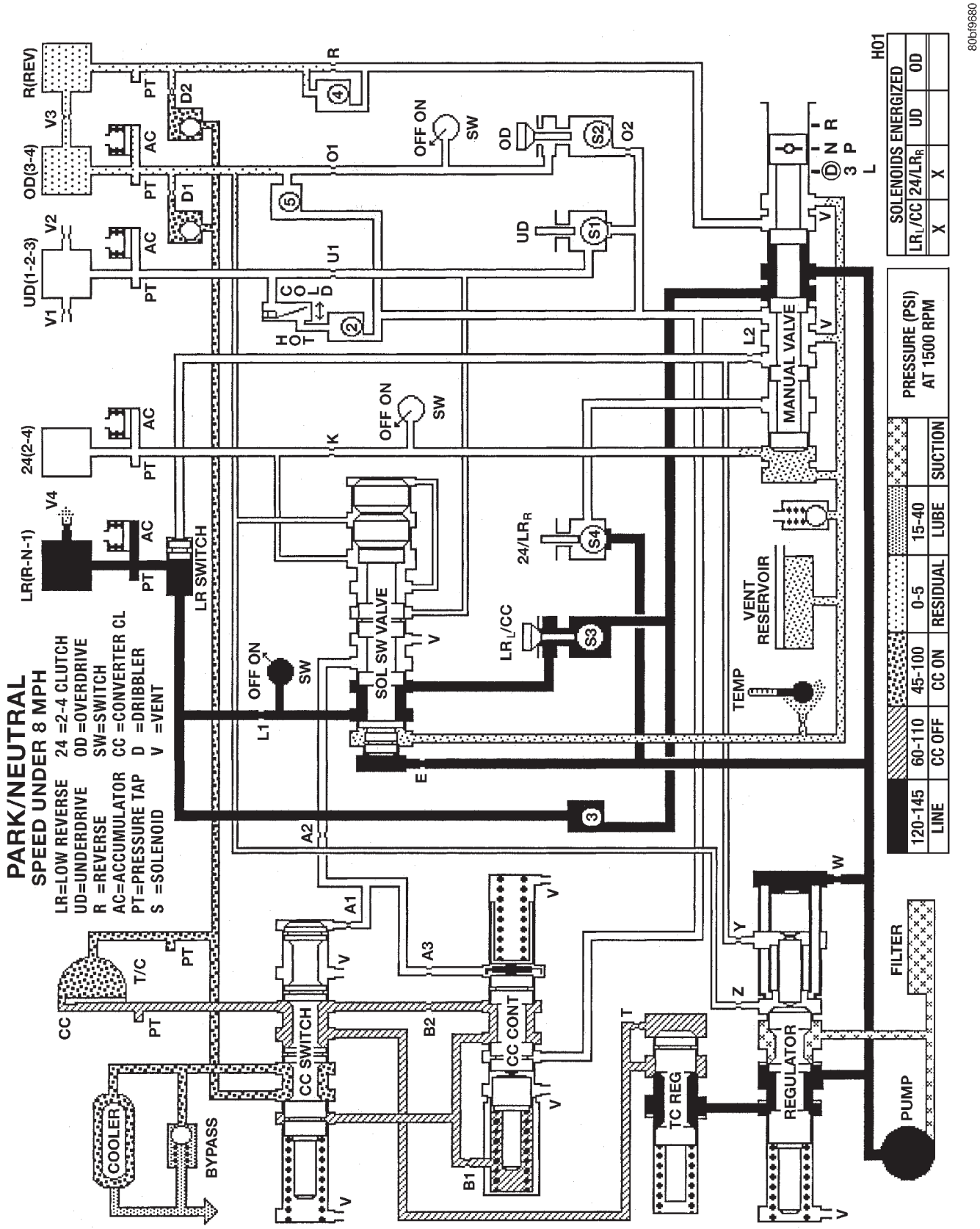

41TE TRANSAXLE HYDRAULIC SCHEMATIC

SCHEMATICS AND DIAGRAMS (Continued)

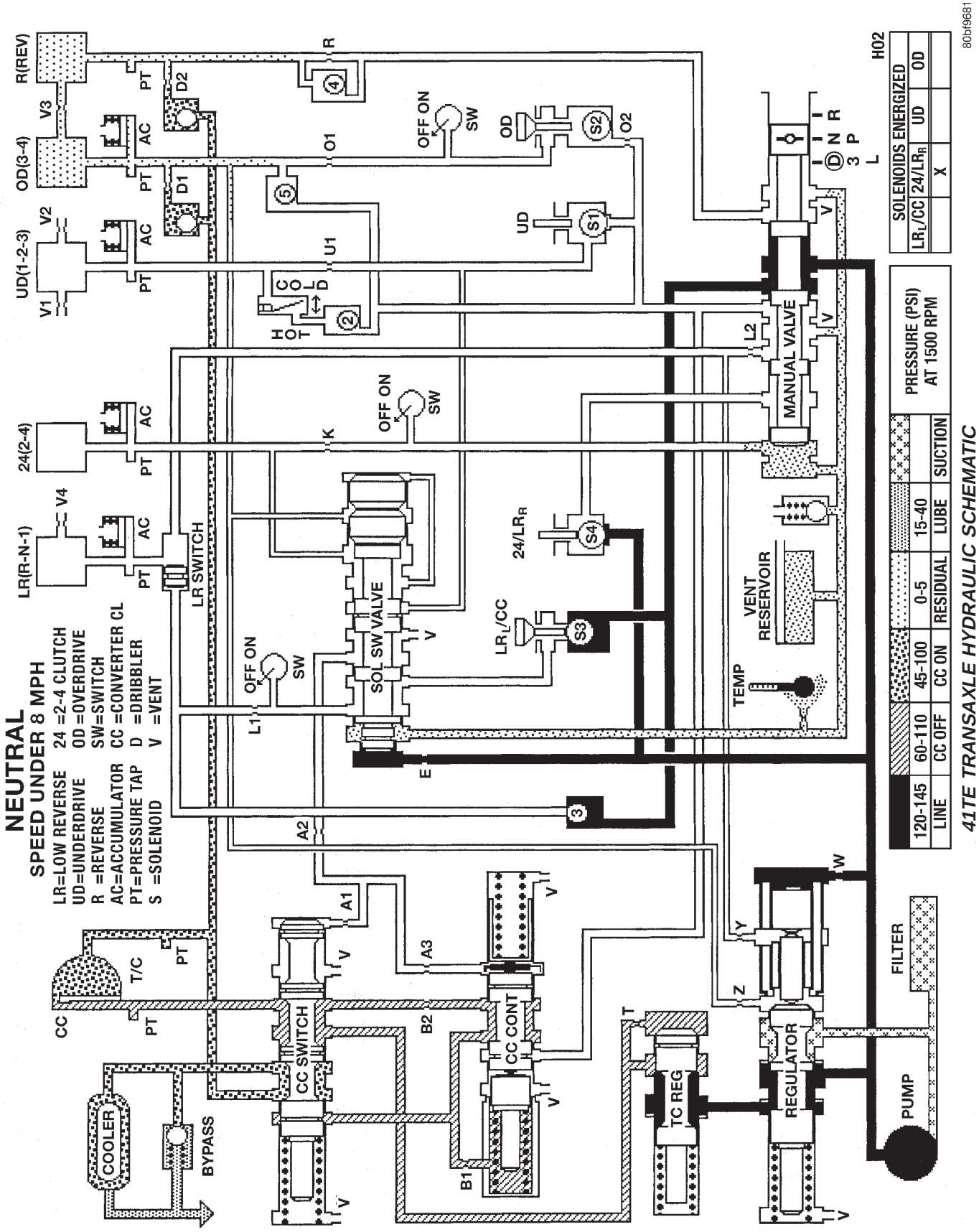

41TE TRANSAXLE HYDRAULIC SCHEMATIC

SCHEMATICS AND DIAGRAMS (Continued)

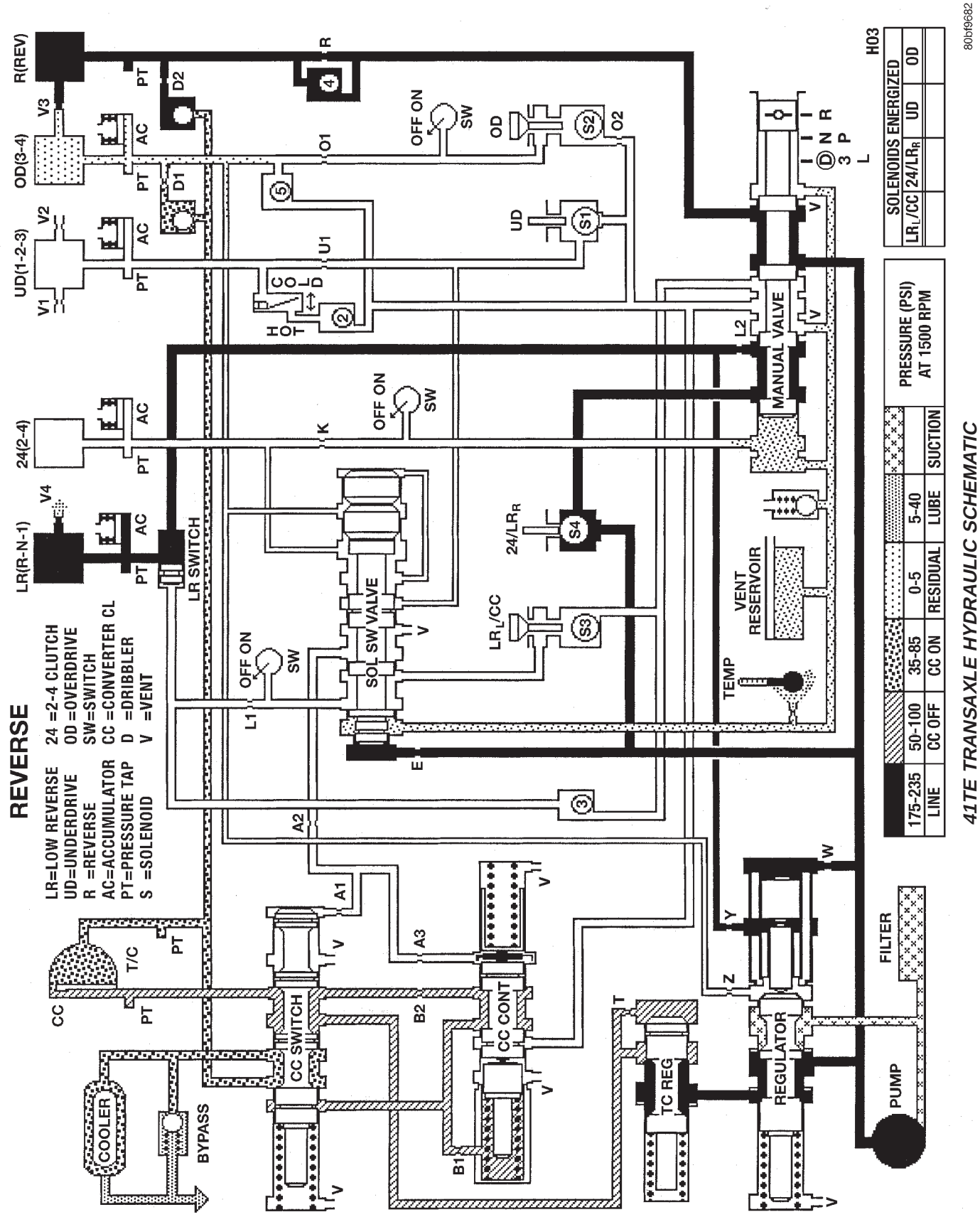

41TE TRANSAXLE HYDRAULIC SCHEMATIC

SCHEMATICS AND DIAGRAMS (Continued)

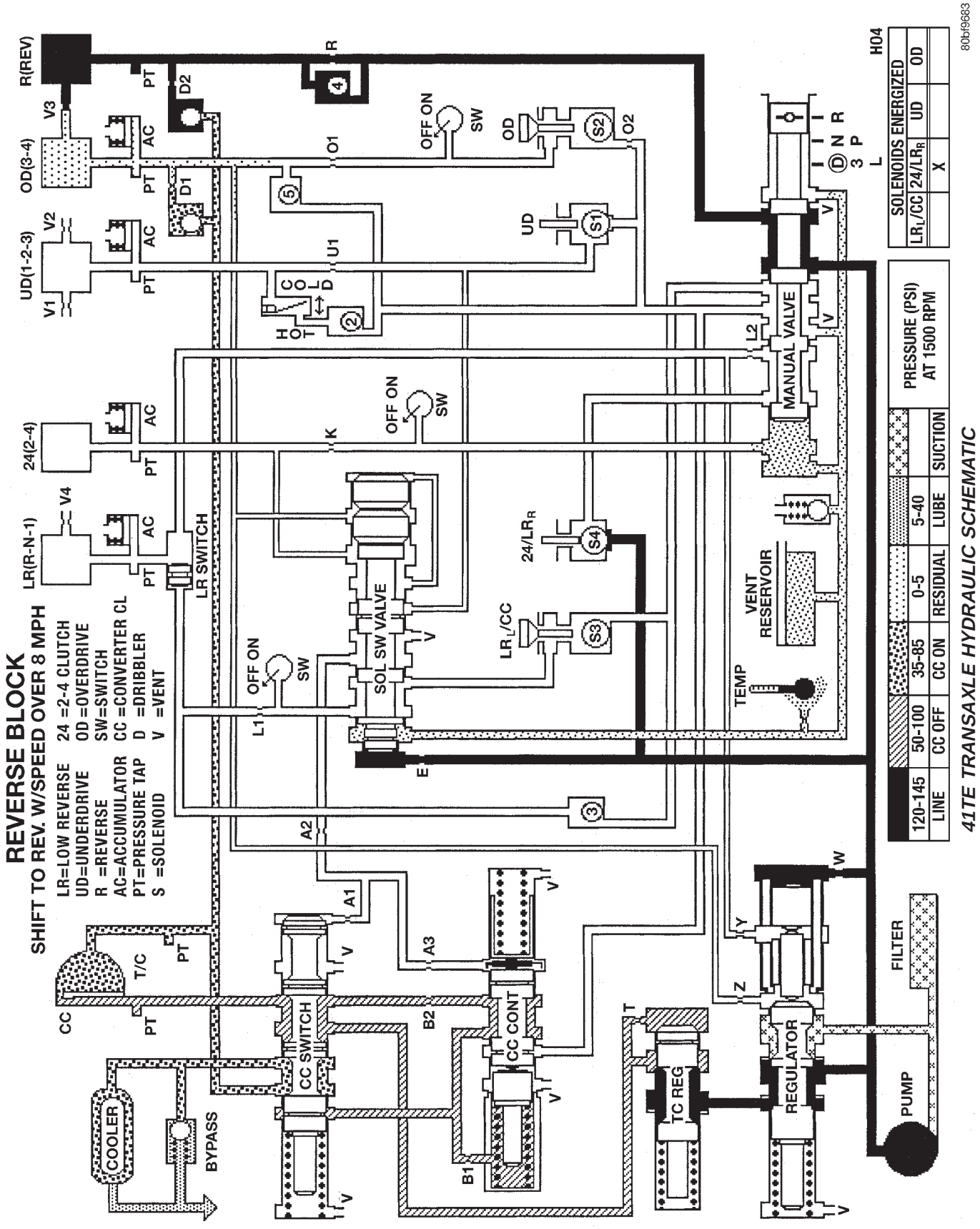

41TE TRANSAXLE HYDRAULIC SCHEMATIC

SCHEMATICS AND DIAGRAMS (Continued)

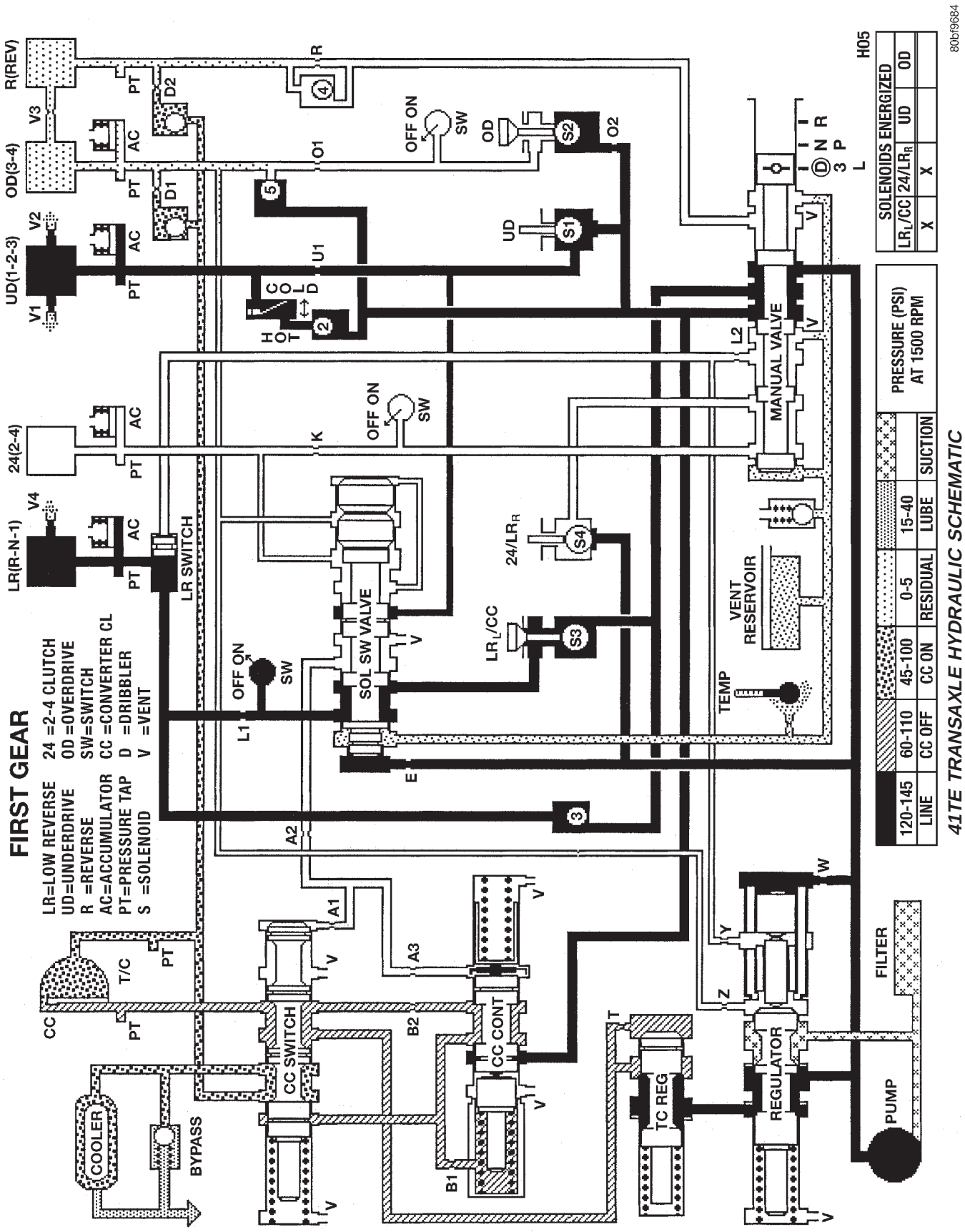

41TE TRANSAXLE HYDRAULIC SCHEMATIC

SCHEMATICS AND DIAGRAMS (Continued)

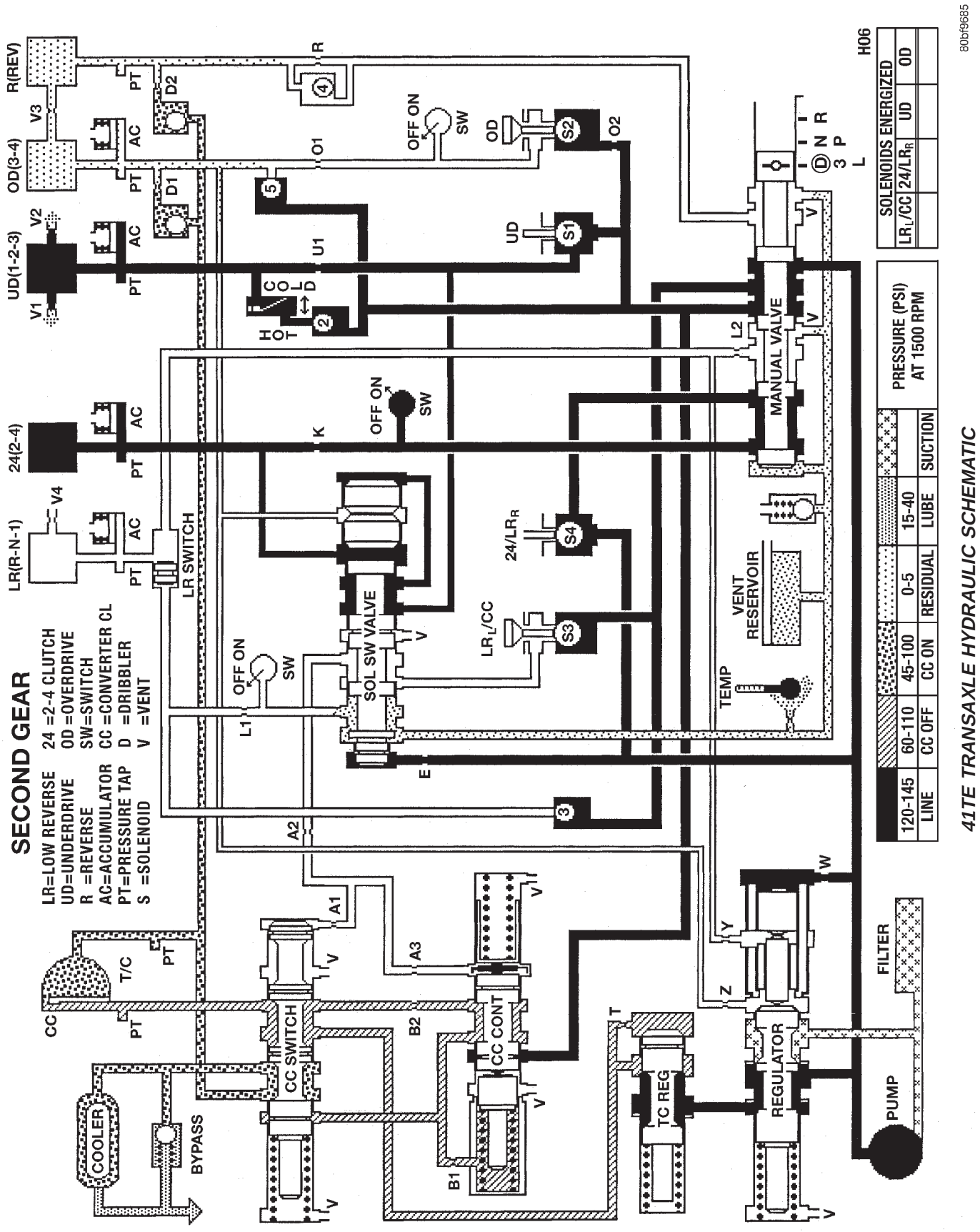

41TE TRANSAXLE HYDRAULIC SCHEMATIC

SCHEMATICS AND DIAGRAMS (Continued)

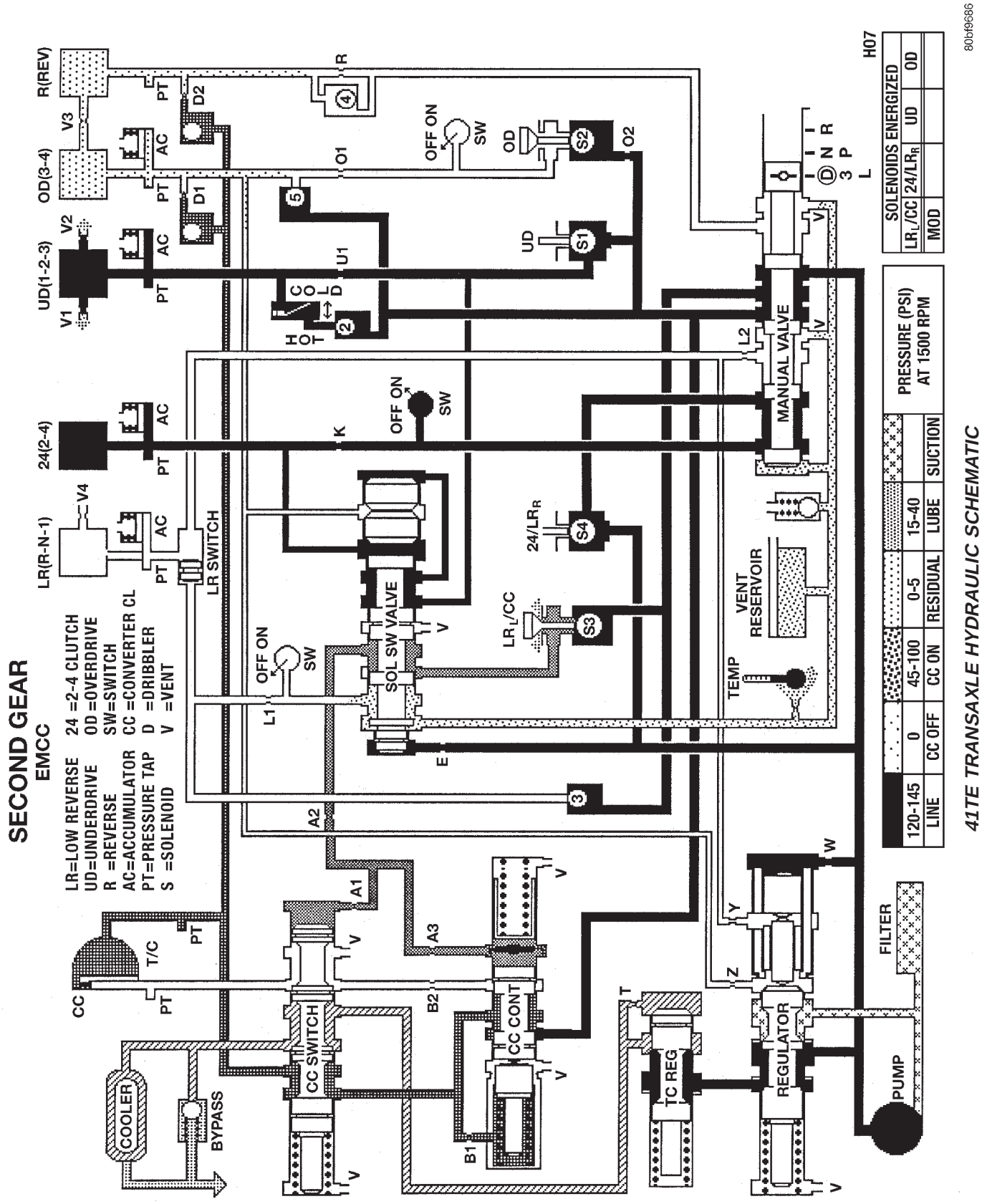

41TE TRANSAXLE HYDRAULIC SCHEMATIC

SCHEMATICS AND DIAGRAMS (Continued)

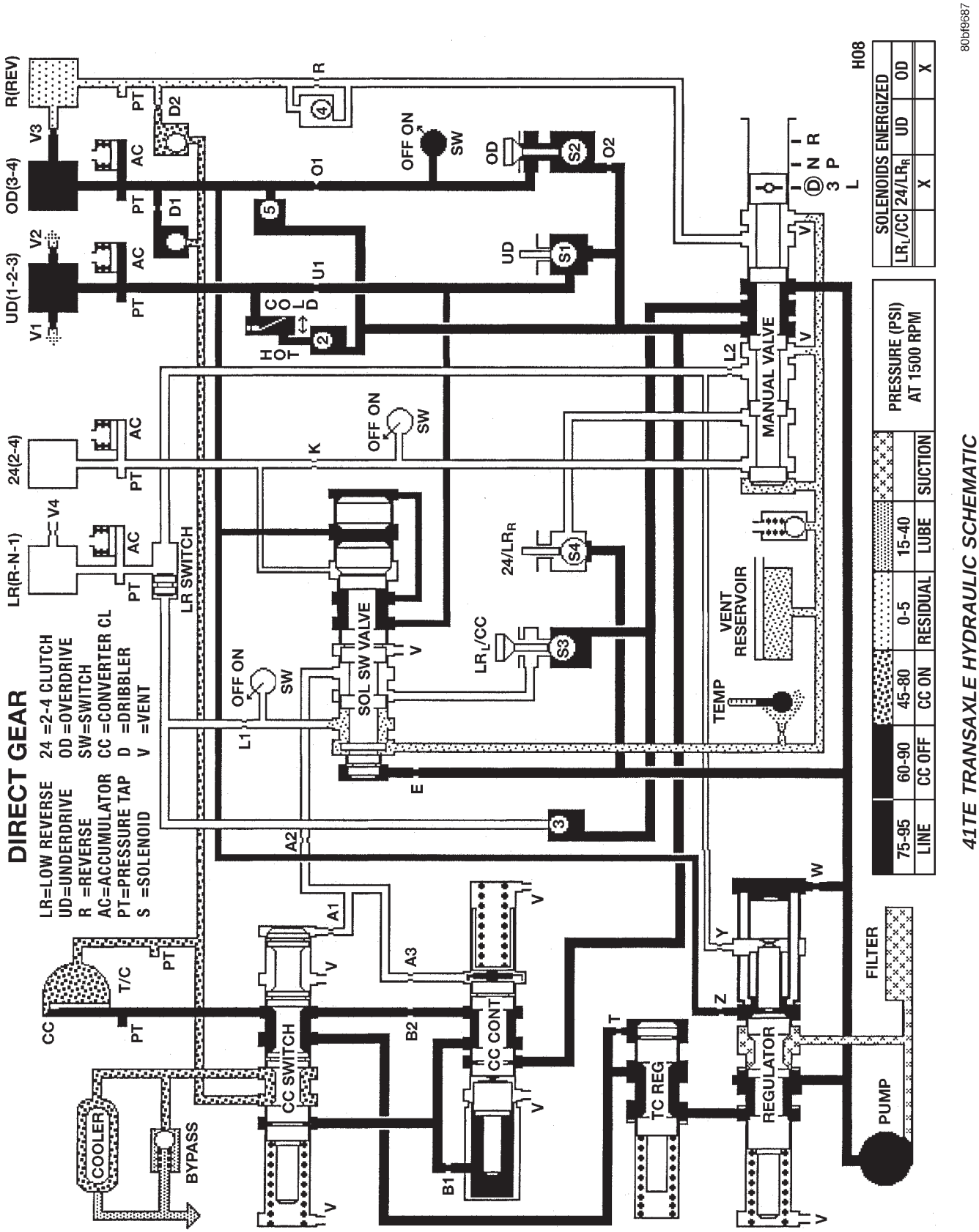

41TE TRANSAXLE HYDRAULIC SCHEMATIC

SCHEMATICS AND DIAGRAMS (Continued)

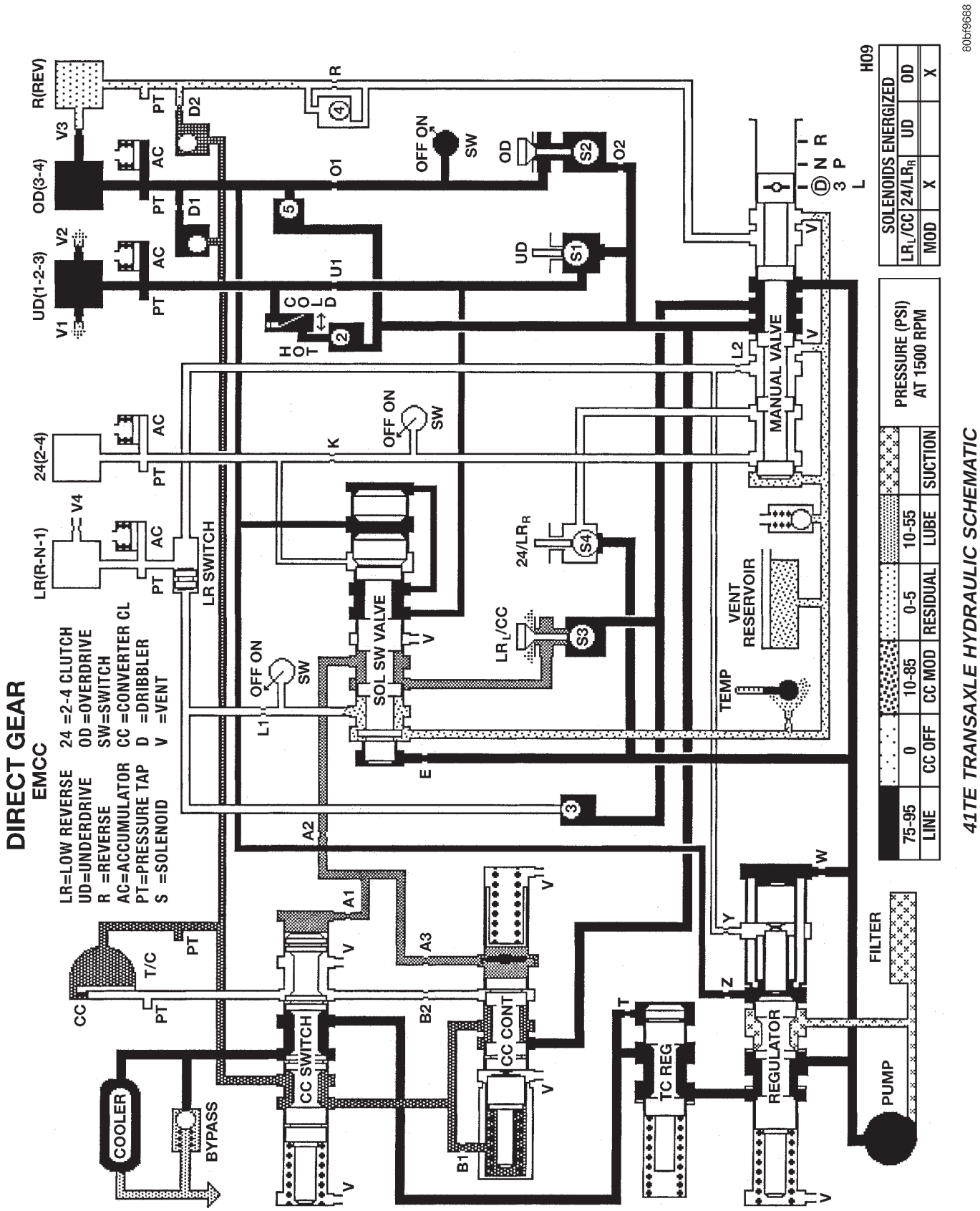

41TE TRANSAXLE HYDRAULIC SCHEMATIC

SCHEMATICS AND DIAGRAMS (Continued)

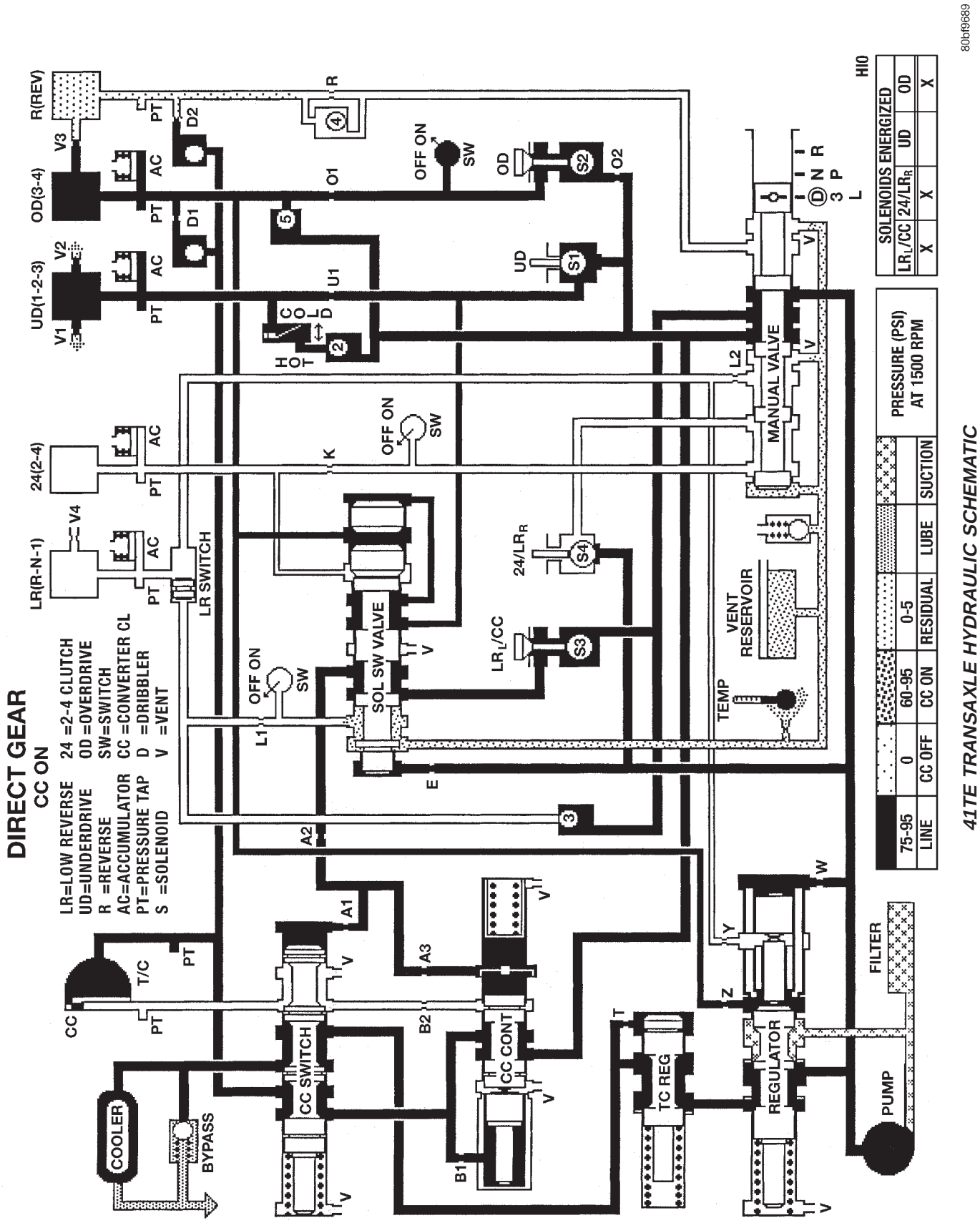

41TE TRANSAXLE HYDRAULIC SCHEMATIC

SCHEMATICS AND DIAGRAMS (Continued)

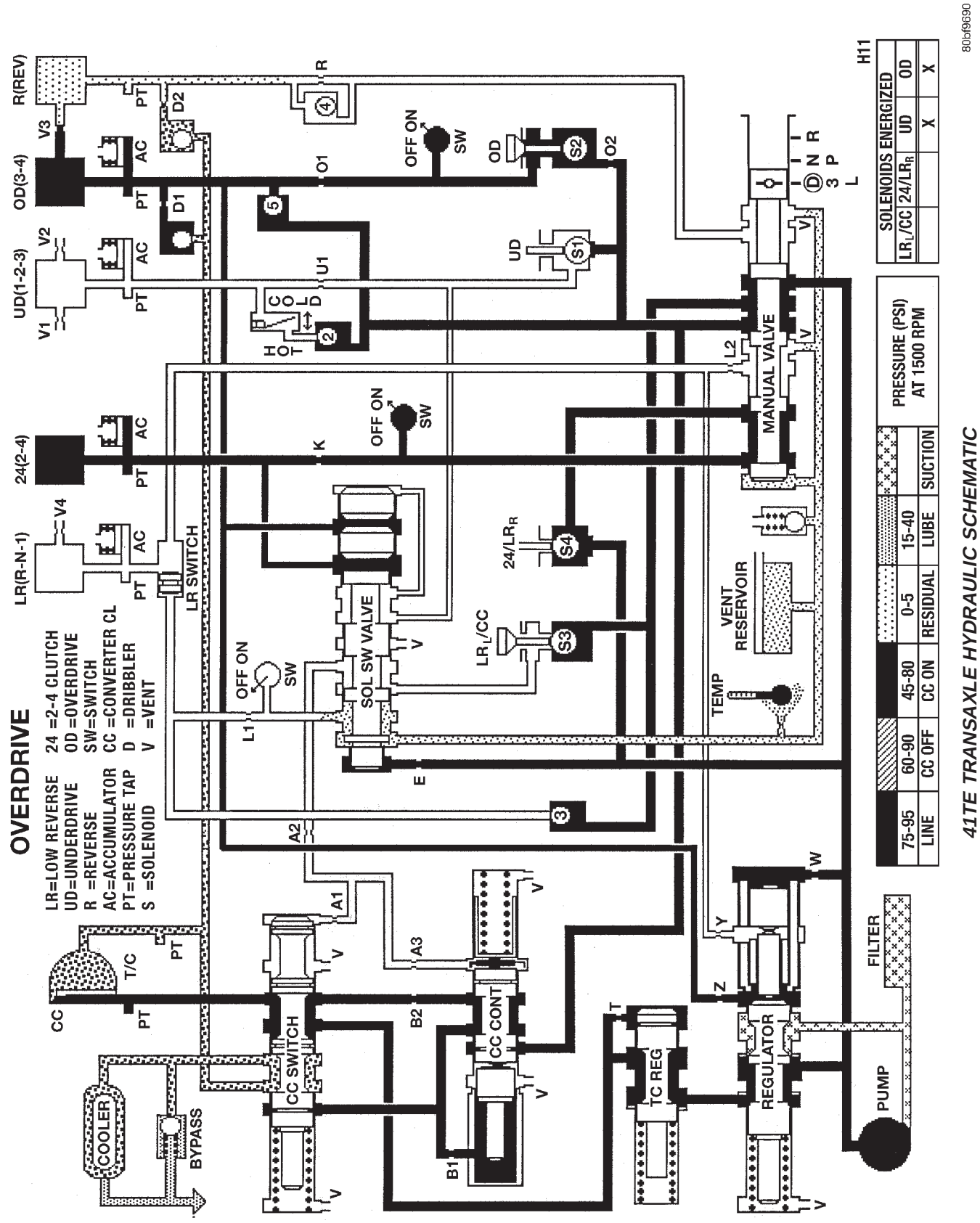

41TE TRANSAXLE HYDRAULIC SCHEMATIC

SCHEMATICS AND DIAGRAMS (Continued)

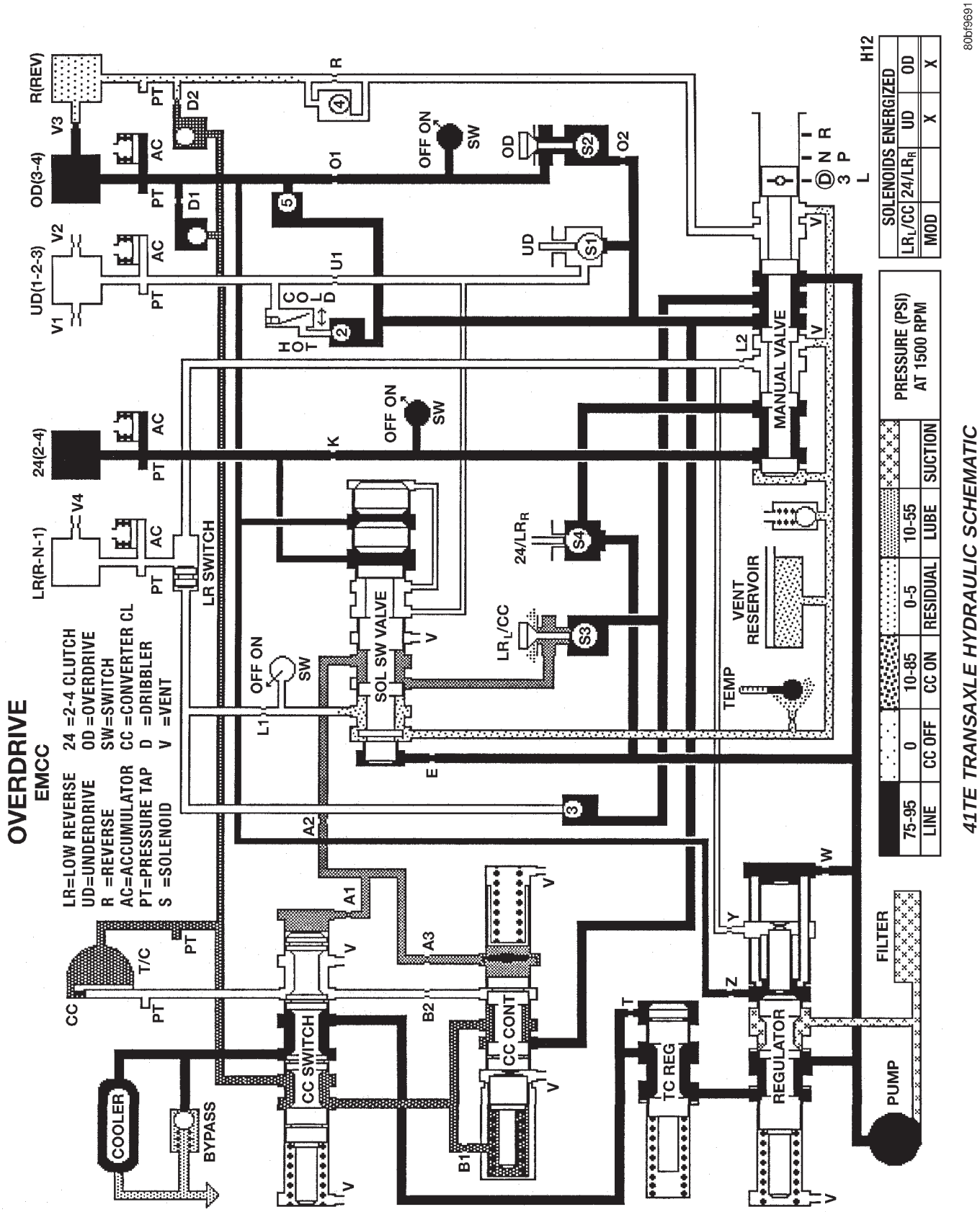

41TE TRANSAXLE HYDRAULIC SCHEMATIC

SCHEMATICS AND DIAGRAMS (Continued)

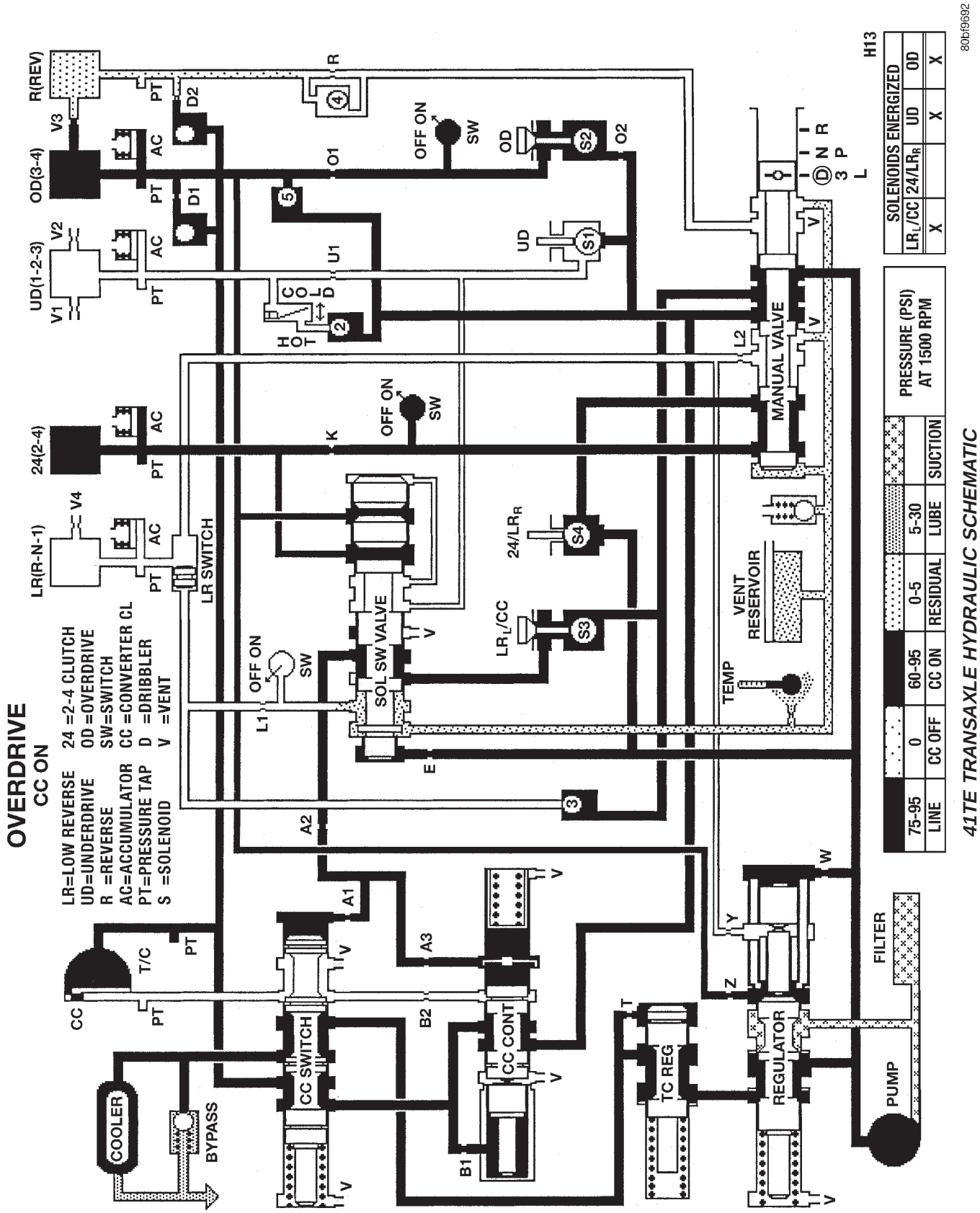

41TE TRANSAXLE HYDRAULIC SCHEMATIC

SPECIFICATIONS

41TE AUTOMATIC TRANSAXLE

Type . . . . . Fully adaptive, electronically controlled, four speed automatic with torque converter and integral differential
Torque Converter Diameter . . . . . 241 millimeters (9.48 in.)
Oil Capacity . . . . . 8.8 Liters (9.3 qts.)
Oil Type . . . . . Mopar® ATF+4 Type 9602
Cooling Method . . . . Water Heat Exchanger and/or air to oil heat exchanger
Lubrication . . . . Pump (internal-external gear-type

Gear Ratios

Transmission

First Gear 2.84
Second Gear 1.57
Direct Gear 1.00
Overdrive Gear 0.69
Reverse Gear 2.21

Overall Top Gear Ratio

2.0 Liter 2.81
2.4 Liter 2.69

Bearing Preload

Differential Assembly . 5 to 18 in. lbs. Drag Torque
Output Hub . . . . . 3 to 8 in. lbs. Drag Torque
Transfer Shaft . . . . . 0.002 to 0.004 in. End Play
Overall Drag At Output Hub . . . . . 3 to 16 in. lbs. Drag Torque

Clutch Pack Clearances

Low/Rev Clutch (Select Reaction Plate) . . . . . 0.89-1.47 mm (0.035-0.058 in.)
Two/Four Clutch (No Selection) . . . . . 0.76-2.64 mm (0.030-0.104 in.)
Reverse Clutch (Select Snap Ring) . . 0.89-1.37 mm (0.035-0.054 in.)
Overdrive Clutch (No Selection) . . . . 1.07-3.25 mm (0.042-0.128 in.)
Underdrive Clutch (Select Reaction Plate) . . . . . 0.94-1.50 mm (0.037-0.059 in.)
Input Shaft End Play . . . . . 0.12-0.63 mm (0.005-0.025 in.)

Input Shaft

End Play . . . . . 0.127–0.635mm (0.005–0.025 in.)

Pump Clearances

Outer Gear To Pocket . . . . . 0.045-0.141 mm (0.0018-0.0056 in.)
Outer Gear Side Clearance . . . . . 0.020-0.046 mm (0.0008-0.0018 in.)
Inner Gear Side Clearance . . . . . 0.020-0.046 mm (0.0008-0.0018 in.)

41TE TORQUE SPECIFICATIONS

DESCRIPTION	TORQUE
Cooler Line Fittings	12 N·m (105 in. lbs.)
Differential Cover	19 N·m (165 in. lbs.)
Differential Ring Gear	95 N·m (70 ft. lbs.)
Differential Bearing Ret.	28 N·m (21 ft. lbs.)
Driveplate To Crank. Bolts	95 N·m (70 ft. lbs.)
Driveplate To Torque Conv.	75 N·m (55 ft. lbs.)
Eight Way Solenoid Conn.	4 N·m (35 in. lbs.)
Extension Housing	28 N·m (21 ft. lbs.)
Input Speed Sensor	27 N·m (20 ft. lbs.)
L/R Clutch Retainer	5 N·m (45 in. lbs.)
Oil Pan To Trans. Case	19 N·m (165 in. lbs.)
Output Gear Bolt	271 N·m (200 ft. lbs.)
Output Gear Stirrup Ret.	23 N·m (17 ft. lbs.)
Output Speed Sensor	27 N·m (20 ft. lbs.)
Pressure Taps	5 N·m (45 in. lbs.)
Pump To Case Bolts	27 N·m (20 ft. lbs.)
Reaction Shaft Bolts	27 N·m (20 ft. lbs.)
Rear End Cover	20 N·m (125 in. lbs.)
Sixty-Way Connector	4 N·m (35 in. lbs.)
Solenoid Assembly To Case . . .	12 N·m (110 in. lbs.)
Transmission Range Sensor	5 N·m (45 in. lbs.)
Transfer Gear Nut	271 N·m (200 ft. lbs.)
Transfer Plate To Case	12 N·m (105 in. lbs.)
Valve Body To Case Bolts	12 N·m (105 in. lbs.)
Valve Body Bolts	5 N·m (45 in. lbs.)
Vent Assembly	12 N·m (105 in. lbs.)

SPECIAL TOOLS

41TE AUTOMATIC TRANSAXLE

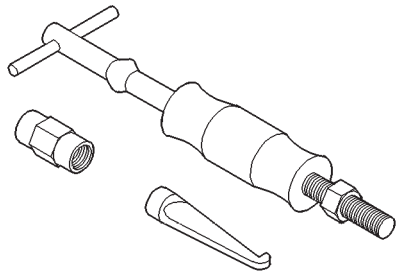

Puller C-637

SPECIAL TOOLS (Continued)

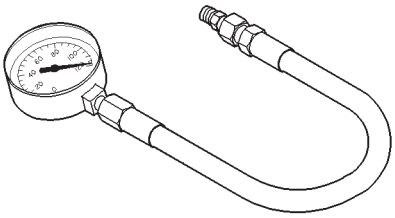

Pressure Gauge (High) C-3293SP

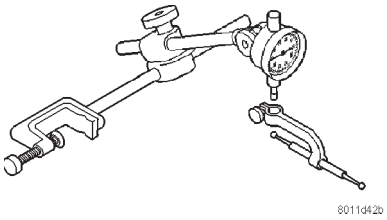

Dial Indicator C-3339

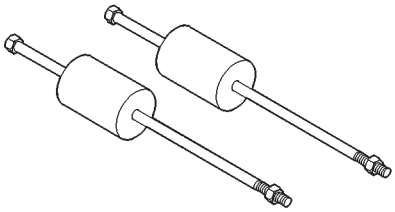

Oil Pump Puller C-3752

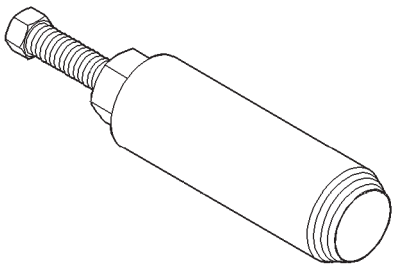

Seal Puller C-3981B

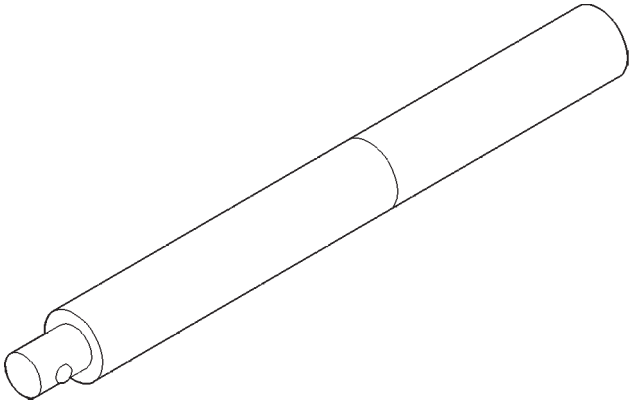

Universal Handle C-4171

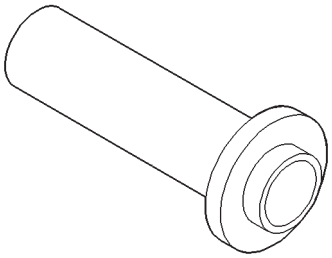

Seal Installer C-4193A

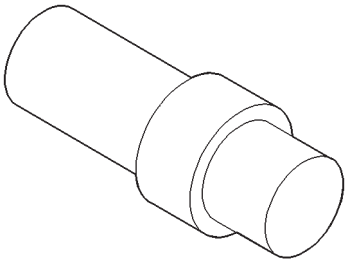

Adapter C-4996

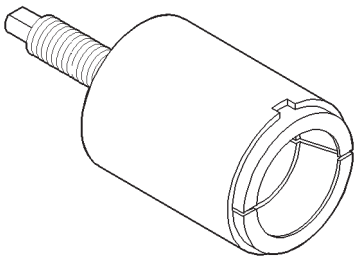

Remover Kit L-4406

SPECIAL TOOLS (Continued)

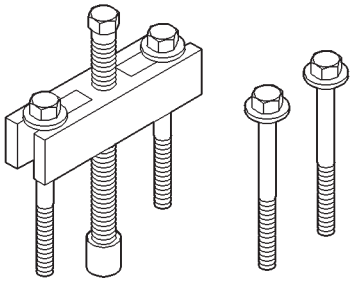

Gear Puller L-4407A

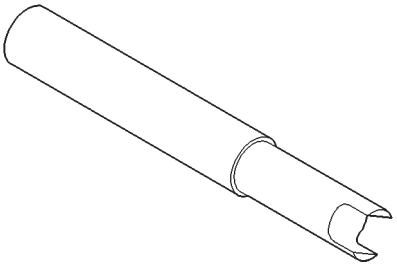

Differential Tool L-4436A

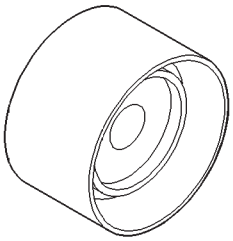

Bearing Installer L-4410

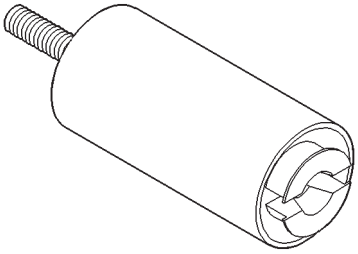

Special Jaw Set L-4518

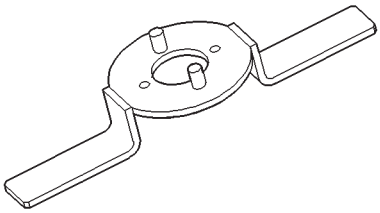

Gear Checking Plate L-4432

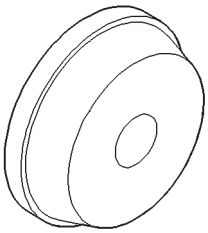

Installer L-4520

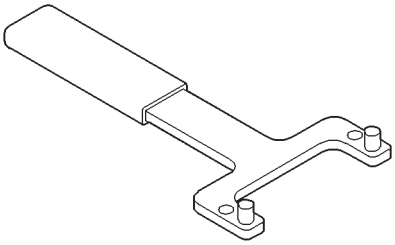

Bearing Puller L-4435

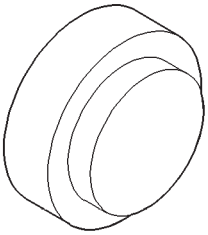

Thrust Button L-4539-2

SPECIAL TOOLS (Continued)

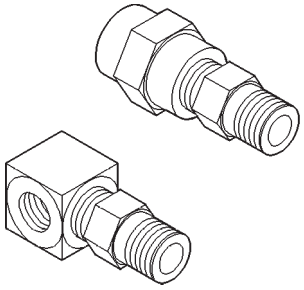

Adapter Set L-4559

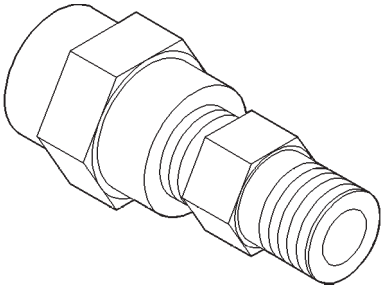

Fig. 409 Adapter L-4559-2

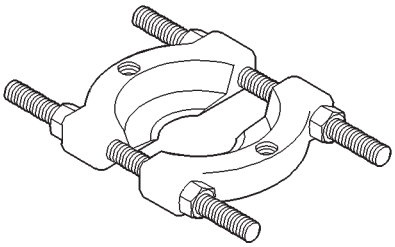

Bearing Splitter P-334

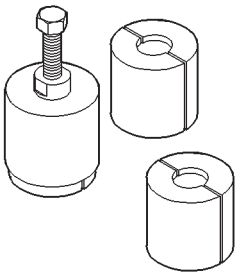

Puller Set 5048

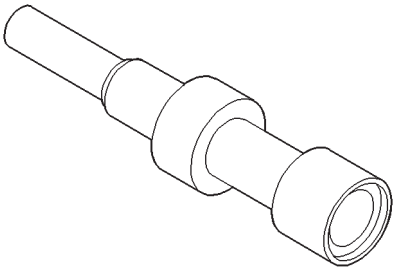

Remover/Installer 5049-A

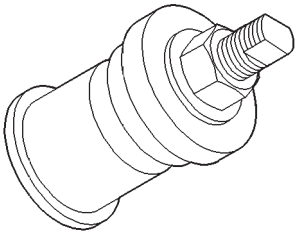

Installer 5050A

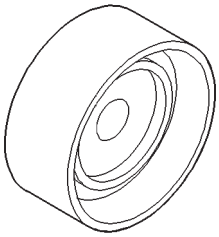

Installer 5052

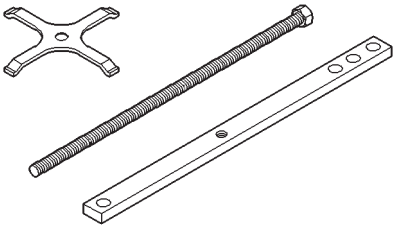

Compressor 5058A

SPECIAL TOOLS (Continued)

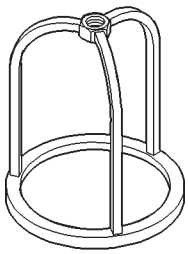

Compressor 5059-A

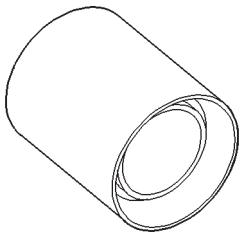

Installer 6053

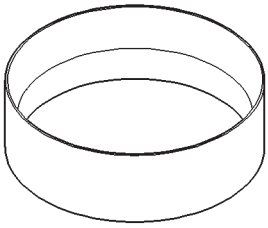

Installer 5067

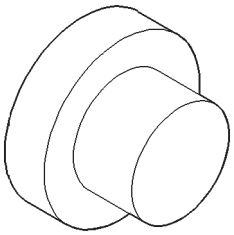

Button 6055

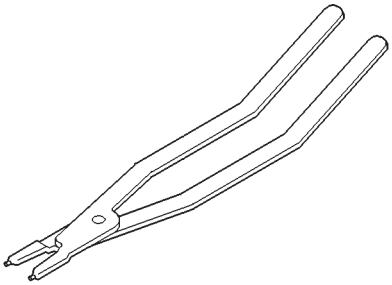

Pliers 6051

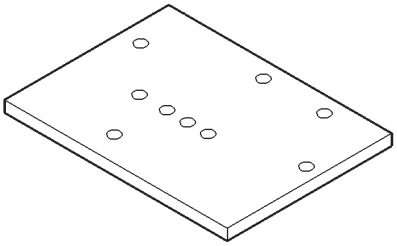

Plate 6056

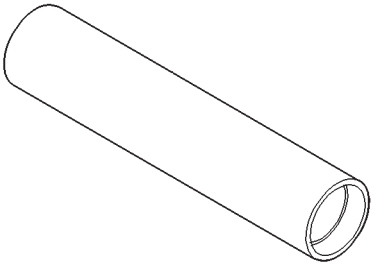

Installer 6052

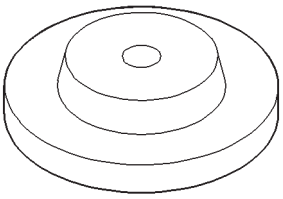

Disk 6057

SPECIAL TOOLS (Continued)

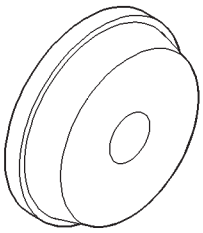

Installer 6061

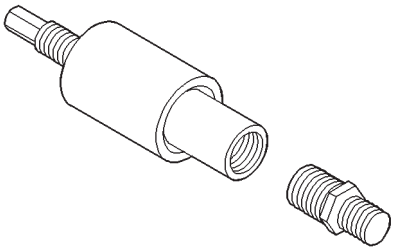

Installer 6261

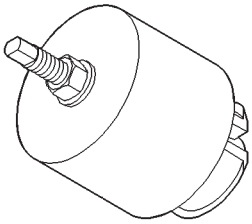

Remover 6062-A

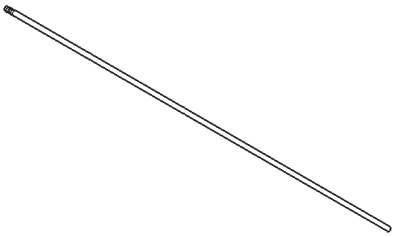

Tip 6268

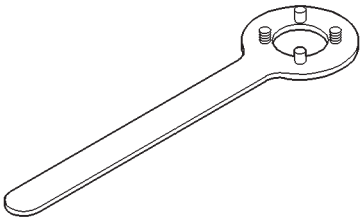

Holder 6259

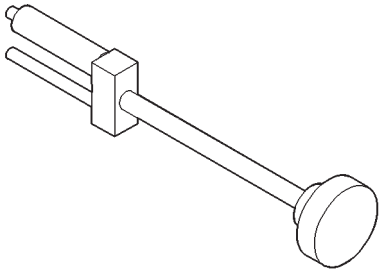

Remover/Installer 6301

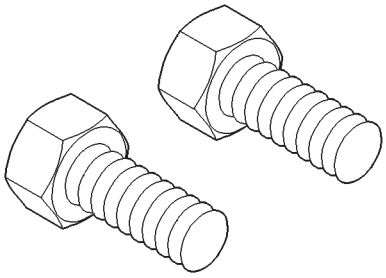

Bolt 6260

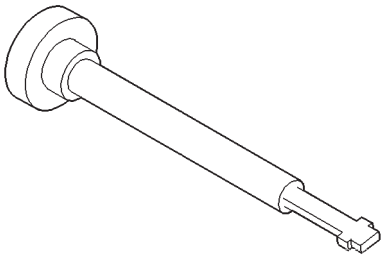

Remover/Installer 6302

SPECIAL TOOLS (Continued)

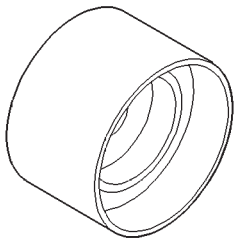

Installer 6536-A

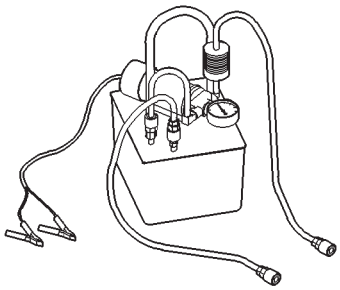

Cooler Flusher 6906A

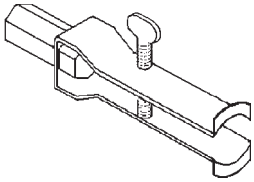

Puller 7794-A

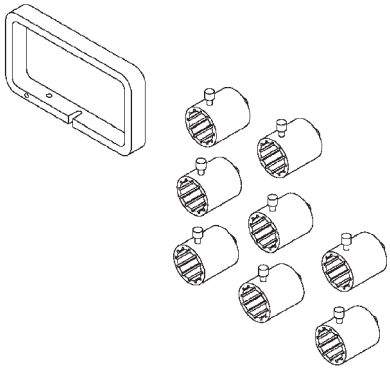

End Play Socket Set 8266

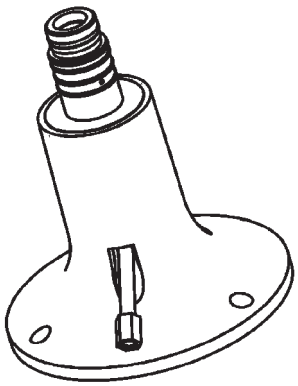

Input Clutch Pressure Fixture 8391

TIRES AND WHEELS

TABLE OF CONTENTS

page

TIRES 1
WHEELS 9

TIRES

TABLE OF CONTENTS

page

DESCRIPTION AND OPERATION
TIRE 1
RADIAL-PLY TIRES 2
REPLACEMENT TIRES 3
SPARE TIRE–TEMPORARY 3
DIAGNOSIS AND TESTING
TIRE NOISE OR VIBRATION 3
TIRE WEAR PATTERNS. 3
TREAD WEAR INDICATORS 4
VEHICLE LEAD DIAGNOSIS AND CORRECTION 4
SERVICE PROCEDURES
PRESSURE GAUGES 4
TIRE INFLATION PRESSURES 4
TIRE PRESSURE FOR HIGH SPEED OPERATION 6
TIRE AND WHEEL MATCH MOUNTING 6
TIRE AND WHEEL ROTATION 7
TIRE LEAK REPAIRING 8
CLEANING AND INSPECTION
TIRE CLEANING 8

DESCRIPTION AND OPERATION

TIRE

DESCRIPTION

Original equipment tires are designed and engineered for each specific vehicle (Fig. 1). They provide the best overall performance for normal operation. The ride and handling characteristics match the vehicle's requirements. With proper care they will give excellent reliability, traction, skid resistance, and tread life.

Driving habits have more effect on tire life than any other factor. Careful drivers will obtain, in most cases, much greater mileage than severe use or careless drivers. A few of the driving habits which will shorten the life of any tire are:

- Rapid acceleration
- Severe application of brakes
- High-speed driving
- Taking turns at excessive speeds
- Striking curbs and other obstacles
- Operating vehicle with over or under inflated tire pressures

Radial ply tires are more prone to irregular tread wear. It is important to follow the tire rotation interval shown in the section on Tire And Wheel Rotation. This will help to achieve a greater tread-life potential.

DESCRIPTION AND OPERATION (Continued)

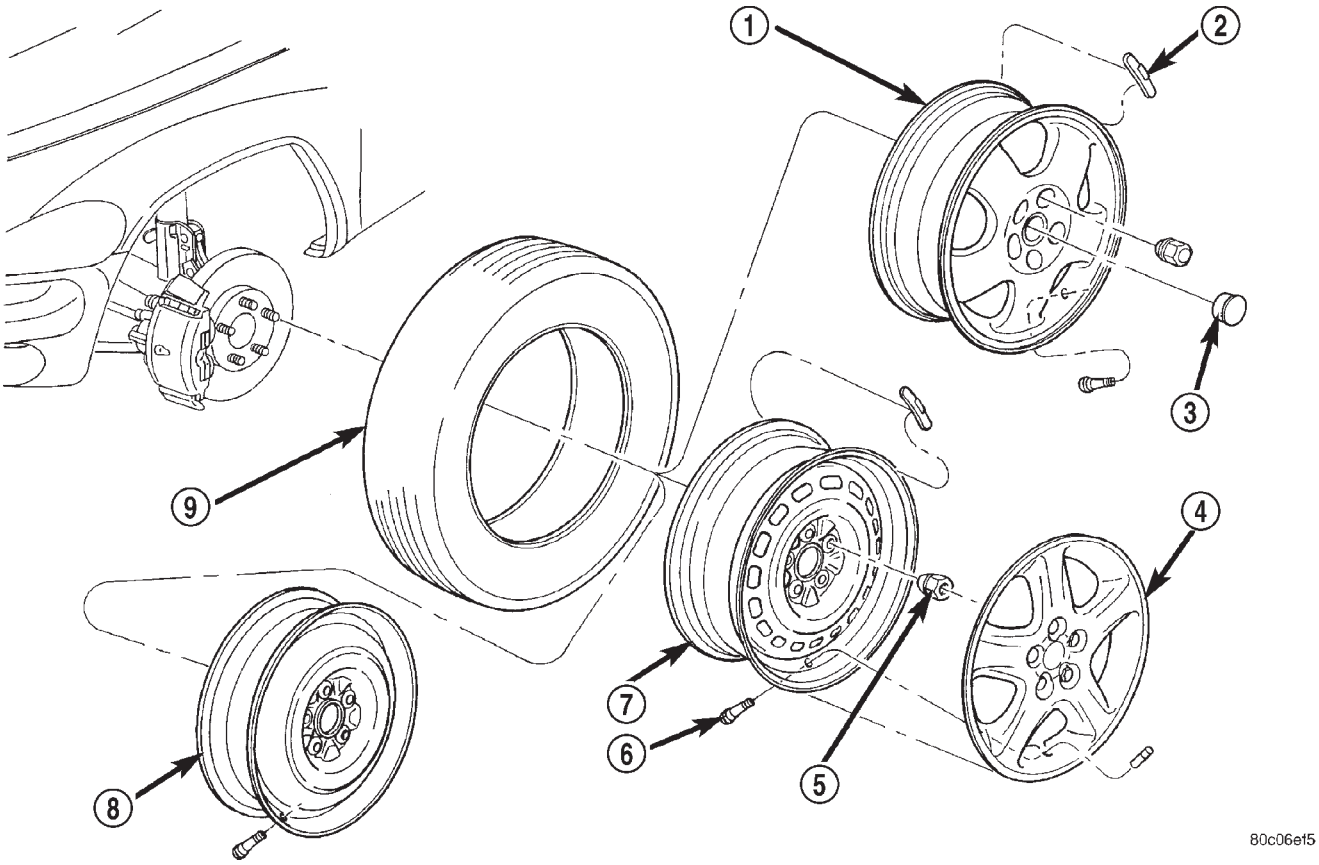

Fig. 1 Tire

1 – CAST ALUMINUM WHEEL
2 – WEIGHTS
3 – CENTER CAP
4 – WHEEL COVER
5 – MOUNTING NUT
6 – VALVE STEM
7 – STEEL WHEEL
8 – SPARE TIRE WHEEL
9 – TIRE

TIRE IDENTIFICATION

Tire type, size, aspect ratio and speed rating are encoded in the letters and numbers imprinted on the side wall of the tire. Refer to the figure (Fig. 2) to interpret the tire identification code.

Performance tires will have a speed rating letter after the aspect ratio number. For example, the letter “S” indicates that the tire is speed rated up to 112 mph (180 km/h). The speed rating is not always printed on the tire sidewall.

- Q - up to 100 mph (160 km/h)
- S - up to 112 mph (180 km/h)
- T - up to 118 mph (190 km/h)
- U - up to 124 mph (200 km/h)
- H - up to 130 mph (210 km/h)
- V - up to 149 mph (240 km/h)
- Z - more than 149 mph (240 km/h) (consult the tire manufacturer for the specific speed rating)

An All Season type tire will have either M + S, M & S or M-S (indicating mud and snow traction) imprinted on the side wall.

TIRE CHAINS

Refer to the owners manual supplied with the vehicle to determine whether the use of tire chains is permitted on this vehicle.

RADIAL-PLY TIRES

DESCRIPTION

Radial-ply tires improve handling, tread life and ride quality, and decrease rolling resistance.

Radial-ply tires must always be used in sets of four. Under no circumstances should they be used on the front only. They may be mixed with temporary spare tires when necessary. A maximum speed of 50 MPH is recommended while a temporary spare is in use.

Radial-ply tires have the same load-carrying capacity as other types of tires of the same size. They also use the same recommended inflation pressures.

The use of oversized tires, either in the front or rear of the vehicle, can cause vehicle drive train fail-

DESCRIPTION AND OPERATION (Continued)

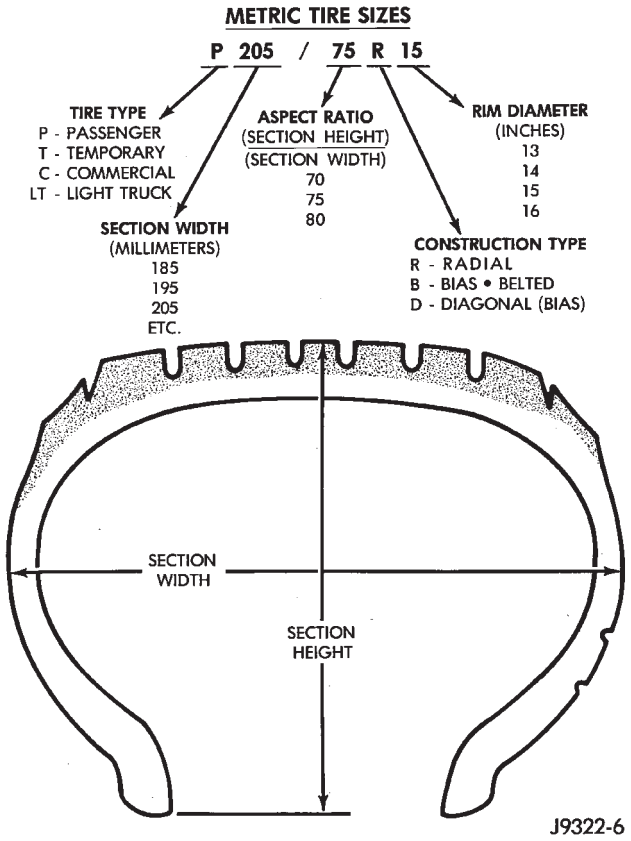

Fig. 2 Tire Identification

ure. This could also cause inaccurate wheel speed signals when the vehicle is equipped with Anti-Lock Brakes.

The use of tires from different manufactures on the same vehicle is NOT recommended. The proper tire pressure should be maintained on all four tires.

REPLACEMENT TIRES

DESCRIPTION

The original equipment tires provide a proper balance of many characteristics such as:

- Ride
- Noise
- Handling
- Durability
- Tread life
- Traction
- Rolling resistance
- Speed capability

It is recommended that tires equivalent to the original equipment tires be used when replacement is needed.

Failure to use equivalent replacement tires may adversely affect the safety and handling of the vehicle.

The use of oversize tires may cause interference with vehicle components. Under extremes of suspension and steering travel, interference with vehicle components may cause tire damage.

WARNING: FAILURE TO EQUIP THE VEHICLE WITH TIRES HAVING ADEQUATE SPEED CAPABILITY CAN RESULT IN SUDDEN TIRE FAILURE.

SPARE TIRE–TEMPORARY

DESCRIPTION

The temporary spare tire is designed for emergency use only. The original tire should be repaired or replaced at the first opportunity, then reinstalled. Do not exceed speeds of 50 M.P.H. when using the temporary spare tire. Refer to Owner's Manual for complete details.

DIAGNOSIS AND TESTING

TIRE NOISE OR VIBRATION

Radial-ply tires are sensitive to force impulses caused by improper mounting, vibration, wheel defects, or possibly tire imbalance.

To find out if tires are causing the noise or vibration, drive the vehicle over a smooth road at varying speeds. Note the noise level during acceleration and deceleration. The engine, differential and exhaust noises will change as speed varies, while the tire noise will usually remain constant.

TIRE WEAR PATTERNS

Under inflation will cause wear on the shoulders of tire. Over inflation will cause wear at the center of tire.

Excessive camber causes the tire to run at an angle to the road. One side of tread is then worn more than the other (Fig. 3).

Excessive toe-in or toe-out causes wear on the tread edges and a feathered effect across the tread (Fig. 3).

DIAGNOSIS AND TESTING (Continued)

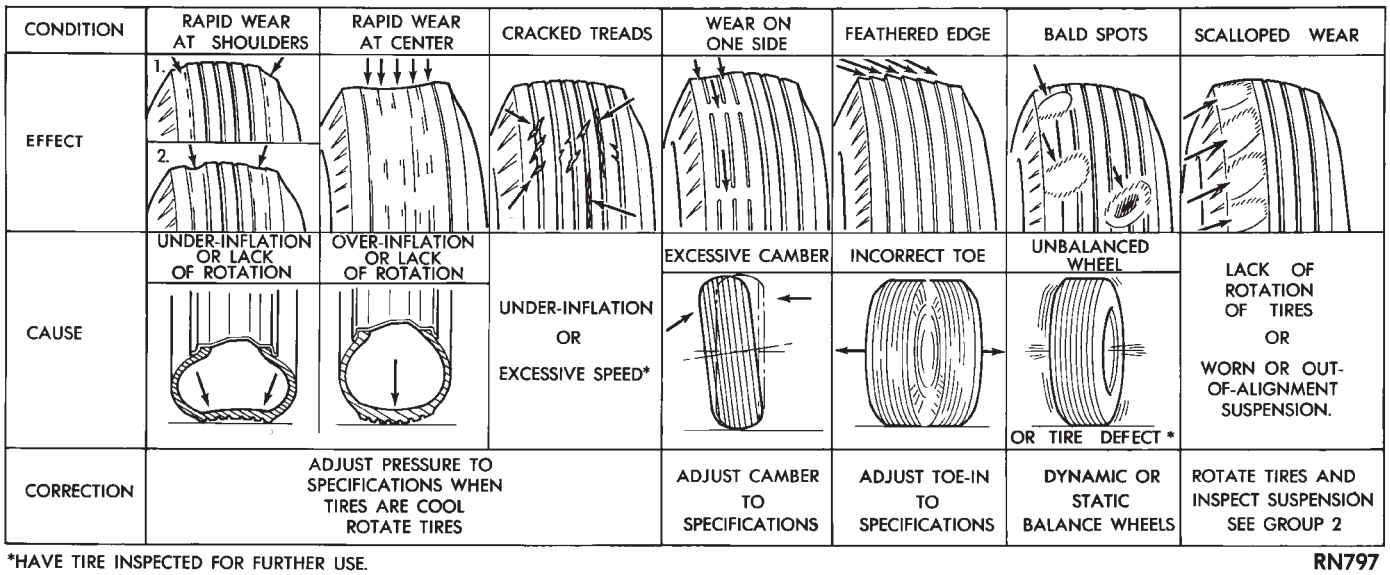

Fig. 3 Tire Wear Patterns

TREAD WEAR INDICATORS

Tread wear indicators are molded into the bottom of the tread grooves. When tread depth is 1.6 mm (1/16 in.), the tread wear indicators will appear as a 13 mm (1/2 in.) band (Fig. 4).

Tire replacement is necessary when indicators appear in two or more grooves or if localized balding occurs.

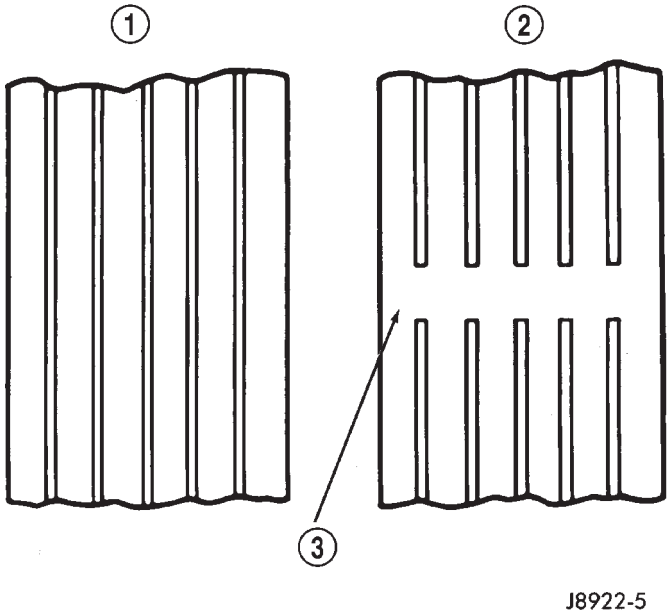

Fig. 4 Tread Wear Indicators

1 – TREAD ACCEPTABLE
2 – TREAD UNACCEPTABLE
3 – WEAR INDICATOR

VEHICLE LEAD DIAGNOSIS AND CORRECTION

Use the following chart to diagnose a vehicle that has a complaint of a drift or lead condition. The use of this chart will help to determine if the lead condition is the result of a bad tire or is caused by the wheel alignment.

SERVICE PROCEDURES

PRESSURE GAUGES

A quality air pressure gauge is recommended to check tire pressure. After checking the air pressure, replace valve cap finger tight.

TIRE INFLATION PRESSURES

Under inflation causes rapid shoulder wear, tire flexing, and can result in tire failure (Fig. 5).

Over inflation causes rapid center wear and loss of the tire's ability to cushion shocks (Fig. 6).

Improper inflation can cause:

- Uneven wear patterns
- Reduced tread life
- Reduced fuel economy
- Unsatisfactory ride
- The vehicle to drift.

For proper tire pressure specification refer to the Tire Inflation Pressure Chart Placard provided with the vehicle.

Tire pressures have been chosen to provide safe operation, vehicle stability, and a smooth ride. Tire pressure should be checked cold once per month. Check tire pressure more frequently when the weather temperature varies widely. Tire pressure will decrease when the outdoor temperature drops.

SERVICE PROCEDURES (Continued)

VEHICLE LEAD DIAGNOSIS AND CORRECTION PROCEDURE

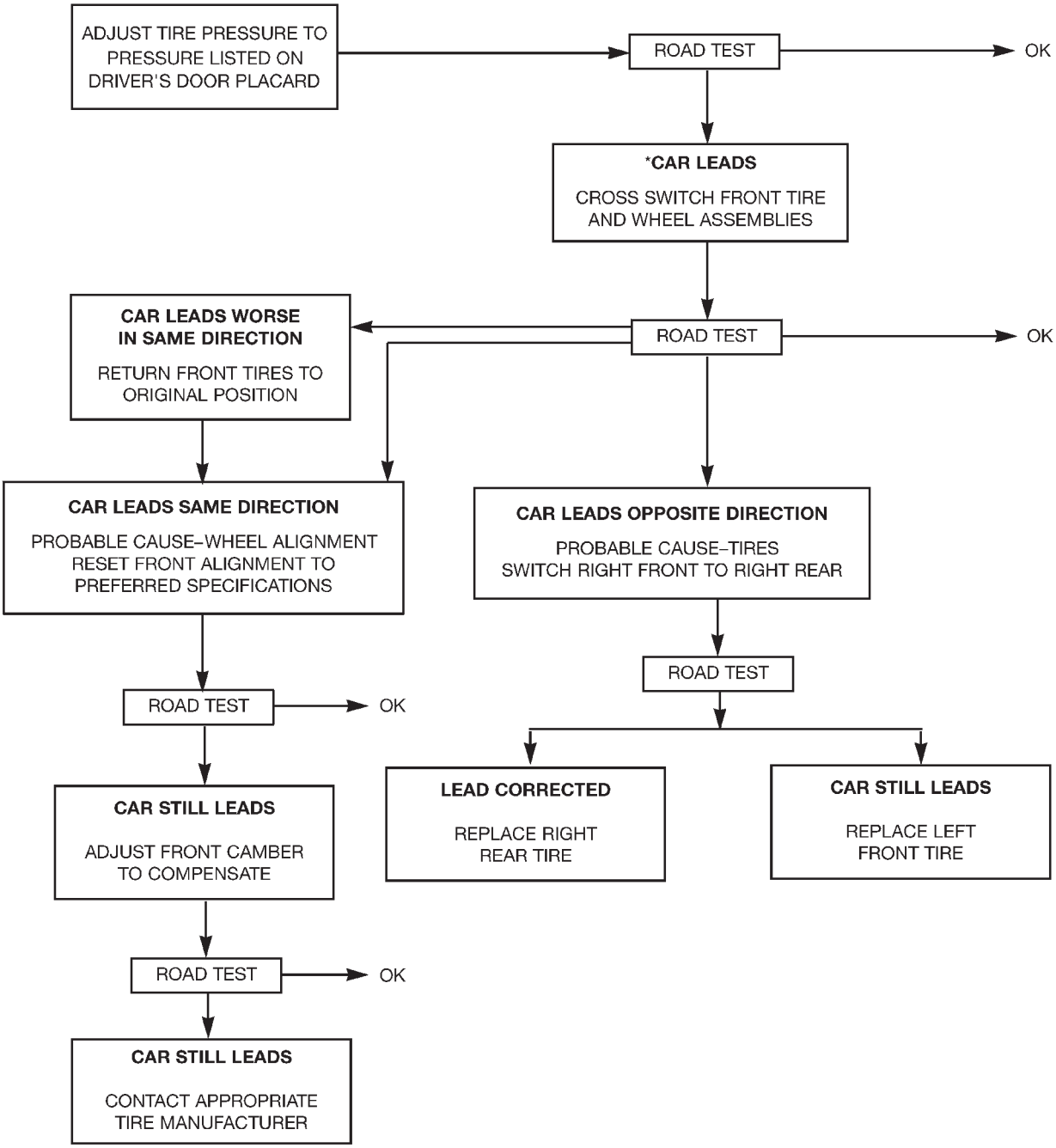

*NOTE: VERIFY THAT LEAD IS NOT RELATED TO STEERING WHEEL NOT CENTERED

80bbc343

SERVICE PROCEDURES (Continued)

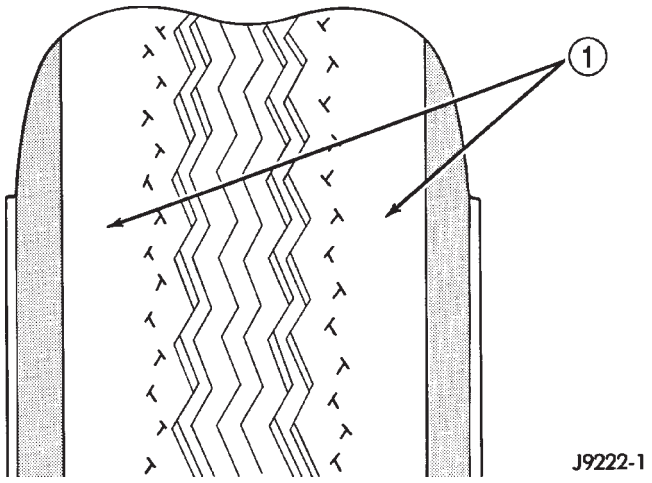

Fig. 5 Under Inflation Wear

1 – THIN TIRE TREAD AREAS

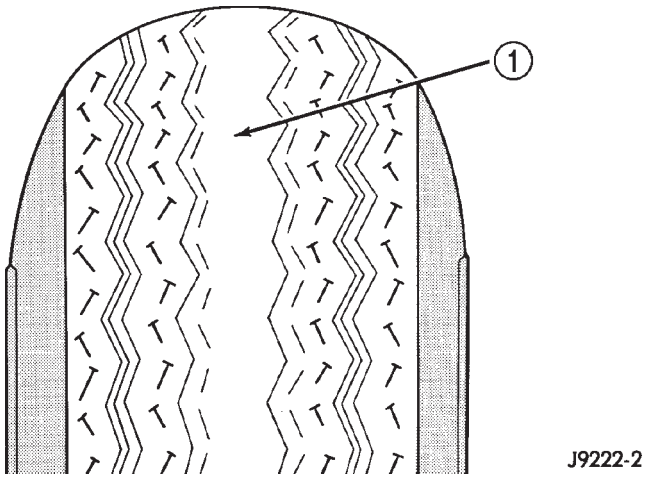

Fig. 6 Over Inflation Wear

1 – THIN TIRE TREAD AREA

Inflation pressures specified on the placard are always the cold inflation pressure of the tire. Cold inflation pressure is obtained after the vehicle has not been operated for at least 3 hours, or the vehicle is driven less than one mile after being inoperative for 3 hours. Tire inflation pressures may increase from 2 to 6 pounds per square inch (psi) during operation. Do not reduce this normal pressure build-up.

WARNING: OVER OR UNDER INFLATED TIRES CAN AFFECT VEHICLE HANDLING. THE TIRE CAN FAIL SUDDENLY, RESULTING IN LOSS OF VEHICLE CONTROL.

TIRE PRESSURE FOR HIGH SPEED OPERATION

WARNING: OVER OR UNDER INFLATED TIRES CAN AFFECT VEHICLE HANDLING. THE TIRE CAN FAIL SUDDENLY, RESULTING IN LOSS OF VEHICLE CONTROL.

DaimlerChrysler Corporation advocates driving this vehicle at safe speeds and within the posted speed limits. Where speed limits allow the vehicle to be driven at high speeds, the correct tire inflation pressure is very important. For speeds up to and including 120 km/h (75 mph), tires must be inflated to the pressures shown on the label applied to the rear facing of the driver's door. For continuous speeds in excess of 120 km/h (75 mph), tires must be inflated to the maximum pressure specified on the tire's sidewall.

TIRE AND WHEEL MATCH MOUNTING

Wheels and tires are match mounted at the factory. This means that the high spot of the tire is matched to the low spot on the wheel rim. This technique is used to reduce run-out in the wheel/tire assembly. The high spot on the tire is marked with a paint mark or a bright colored adhesive label on the outboard sidewall. The low spot on the rim is identified with a label on the outside of the rim and a dot or line in the drop well on the tire side of the rim. If the outside label has been removed the tire will have to be removed to locate the dot or line on the inside of the rim.

Before dismounting a tire from its wheel, a reference mark should be placed on the tire at the valve stem location. This reference will ensure that it is remounted in the original position on the wheel.

(1) Measure the total indicator runout on the center of the tire tread rib. Record the indicator reading. Mark the tire to indicate the high spot. Place a mark on the tire at the valve stem location (Fig. 7).

(2) Break down the tire and remount it 180 degrees on the rim (Fig. 8).

(3) Measure the total indicator runout again. Mark the tire to indicate the high spot.

(4) If runout is still excessive (in excess of 1.524 mm or 0.060 in.), the following procedures must be done.

- If the new high spot is within 102 mm (4.0 in.) of the first spot on the tire and is still excessive, replace the tire.
- If the new high spot is within 102 mm (4.0 in.) of the first spot on the wheel, the wheel may be out of specifications. Refer to Tire and Wheel Runout.
- If the new high spot is NOT within 102 mm (4.0 in.) of either high spot, draw an arrow on the tread

SERVICE PROCEDURES (Continued)

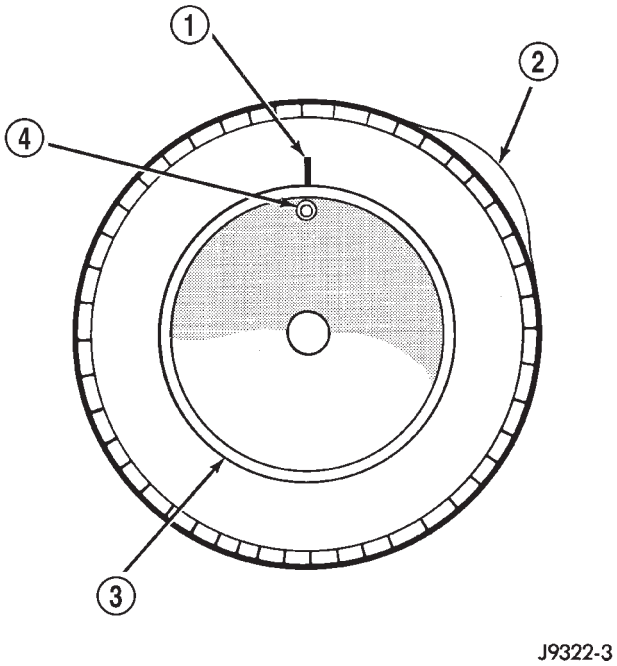

Fig. 7 First Measurement On Tire

1 – REFERENCE MARK
2 – 1ST MEASUREMENT HIGH SPOT MARK TIRE AND RIM
3 – WHEEL
4 – VALVE STEM

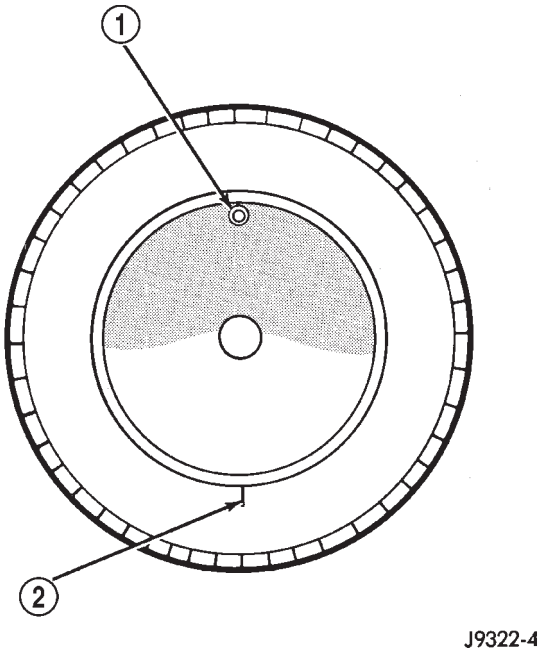

Fig. 8 Remount Tire 180 Degrees

1 – VALVE STEM
2 – REFERENCE MARK

from new high spot to first. Break down the tire and remount it 90 degrees on rim in that direction (Fig. 9), then remeasure runout. This procedure will normally reduce the runout to an acceptable amount.

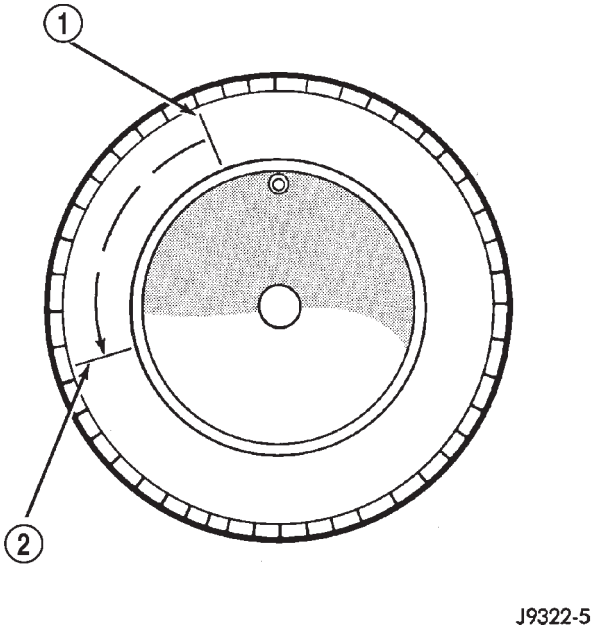

Fig. 9 Remount Tire 90 Degrees In Direction of Arrow

1 – 2ND HIGH SPOT ON TIRE
2 – 1ST HIGH SPOT ON TIRE

TIRE AND WHEEL ROTATION

NON-DIRECTIONAL TREAD PATTERN TIRES

Tires on the front and rear axles operate at different loads and perform different functions. For these reasons, they wear at unequal rates, and tend to develop irregular wear patterns. These effects can be reduced by timely rotation of tires. The benefits of rotation are especially worthwhile. Rotation will increase tread life, help to maintain mud, snow, and wet traction levels, and contribute to a smooth, quiet ride.

The suggested rotation method is the forward-cross tire rotation method (Fig. 10). This method takes advantage of current tire industry practice which allows rotation of radial-ply tires. Other rotation methods may be used, but may not have all the benefits of the recommended method.

NOTE: Only the 4 tire rotation method may be used if the vehicle is equipped with a low mileage or temporary spare tire.

SERVICE PROCEDURES (Continued)

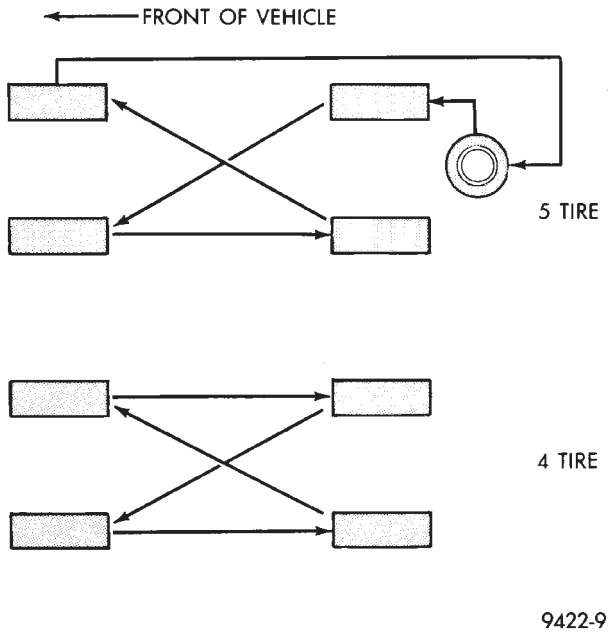

Fig. 10 Forward-Cross Tire Rotation Method

DIRECTIONAL TREAD PATTERN TIRES

Some vehicles are fitted with special high-performance tires having a directional tread pattern. These tires are designed to improve traction on wet pavement. To obtain the full benefits of this design, the tires must be installed so that they rotate in the correct direction. This is indicated by arrows on the tire sidewalls.

When wheels and tires are being installed, extra care is needed to ensure that this direction of rotation is maintained.

Refer to Owner's Manual for rotation schedule.

TIRE LEAK REPAIRING

For proper repair, a radial tire must be removed from the wheel and repaired (patched) from the inside. Repairs should only be made if the defect or puncture, is in the tread area (Fig. 11). The tire should be replaced if the puncture is located in the sidewall.

Deflate tire completely before attempting to dismount the tire from the wheel. **Use a lubricant such as a mild soap solution when dismounting or mounting tire.** Use tools free of burrs or sharp edges which could damage the tire or wheel rim.

Before mounting tire on wheel, make sure all rust or corrosion is removed from the wheel rim bead and repaint if necessary.

Install the wheel on the vehicle, and progressively tighten the 5 wheel nuts to a torque of 135 N·m (100 ft. lbs.).

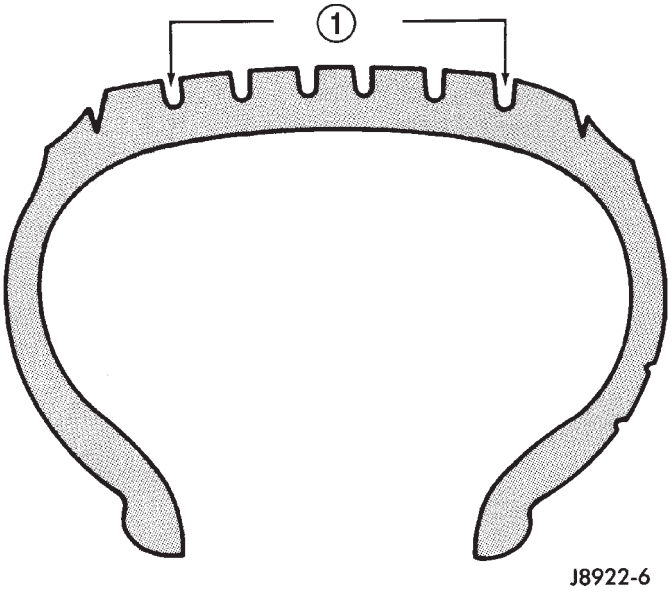

Fig. 11 Tire Repair Area

1 – REPAIRABLE AREA

CLEANING AND INSPECTION

TIRE CLEANING

Remove the protective coating on the tires before delivery of a vehicle. This coating may cause deterioration of the tires.

To remove the protective coating, apply warm water and let it soak for a few minutes. Afterwards, scrub the coating away with a soft bristle brush. Steam cleaning may also be used to remove the coating.

CAUTION: DO NOT use gasoline, mineral oil, oil-based solvent or a wire brush for cleaning.

WHEELS

TABLE OF CONTENTS

page

DESCRIPTION AND OPERATION
WHEEL 9
WHEEL COVER 10
DIAGNOSIS AND TESTING
WHEEL INSPECTION. 10
TIRE AND WHEEL RUNOUT 11
SERVICE PROCEDURES
TIRE AND WHEEL BALANCE. 13
REMOVAL AND INSTALLATION
WHEEL COVER 15
WHEEL COVER RETAINING NUT 15
TIRE AND WHEEL ASSEMBLY (ALUMINUM WHEEL) 16
TIRE AND WHEEL ASSEMBLY (STEEL WHEEL) 16
CLEANING AND INSPECTION
ALUMINUM WHEEL CARE. 18
SPECIFICATIONS
WHEEL SPECIFICATIONS 18

DESCRIPTION AND OPERATION

WHEEL

DESCRIPTION

Original equipment wheels are designed for proper operation at all loads up to the specified maximum vehicle capacity.

All models use steel or cast aluminum drop center wheels (Fig. 1). Every wheel has raised sections between the rim flanges and rim drop well called safety humps (Fig. 2).

Initial inflation of the tires forces the bead over these raised sections. In case of air loss the raised sections help hold the tire in position on the wheel until the vehicle can be brought to a safe stop.

Cast aluminum wheels require special balance weights to fit the contour of the wheel flange (Fig. 3).

The wheel mounting studs and nuts are designed for specific wheel applications and must be replaced with equivalent parts. Do not use replacement parts of lesser quality or of a substitute design. All aluminum wheels use wheel mounting nuts with an enlarged nose. This enlarged nose is necessary to ensure proper retention of the wheels.

Vehicles that are equipped with bolt-on wheel covers use large nose wheel mounting nuts. The wheel mounting nuts have external threads for attachment of the wheel cover retaining nuts. For more information on the bolt-on wheel cover, refer to Wheel Cover in this section.

DESCRIPTION AND OPERATION (Continued)

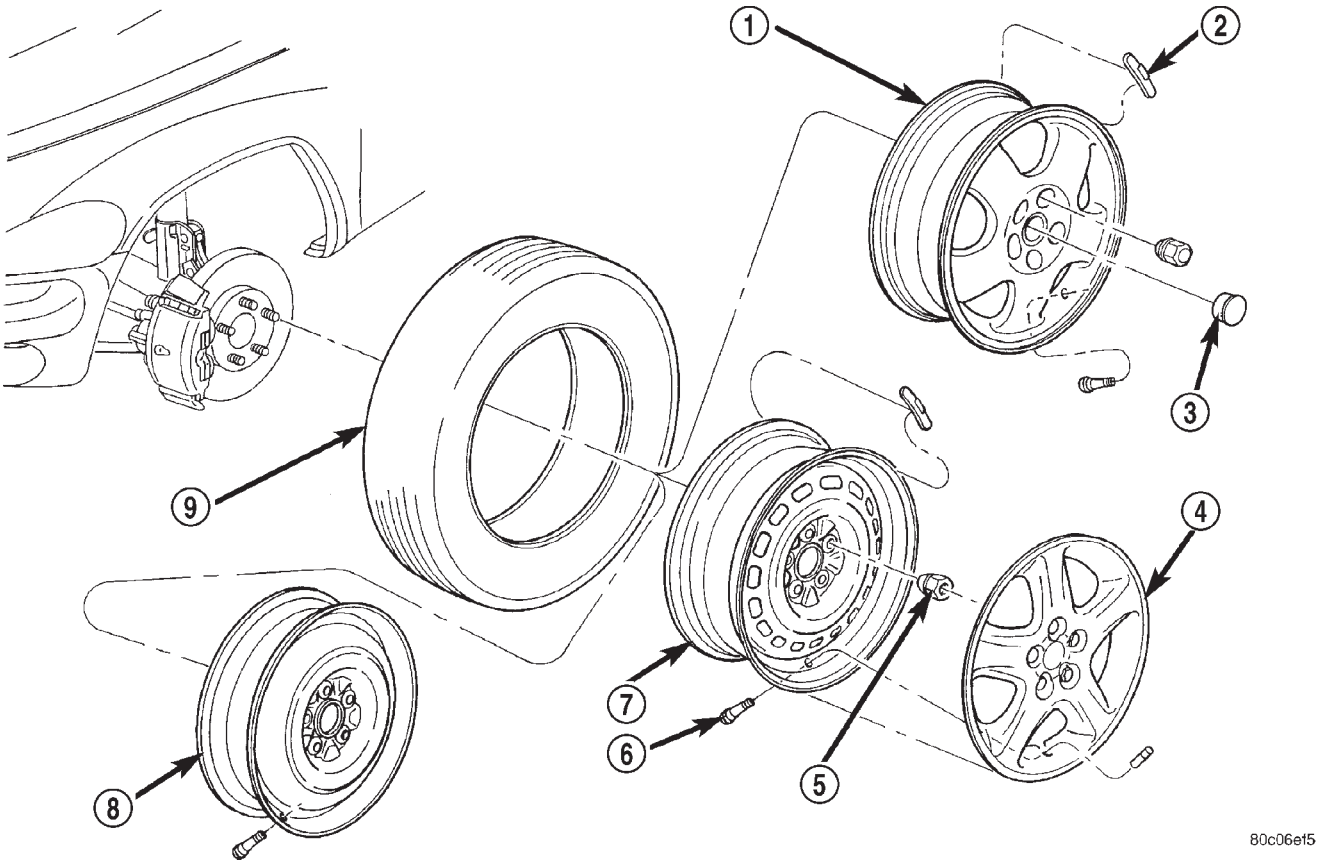

Fig. 1 Wheels and Covers

1 – CAST ALUMINUM WHEEL
2 – WEIGHTS
3 – CENTER CAP
4 – WHEEL COVER
5 – MOUNTING NUT
6 – VALVE STEM
7 – STEEL WHEEL
8 – SPARE TIRE WHEEL
9 – TIRE

WHEEL COVER

This vehicle uses a bolt-on type wheel cover on models with steel wheels (Fig. 4).

The wheel cover is attached to the wheel using the 5 plastic nuts located in the wheel cover (Fig. 4). The nuts in the wheel cover thread onto a special externally threaded wheel nut to retain the wheel cover to the wheel (Fig. 5).

Each wheel cover retaining nut is retained in the wheel cover and will stay on the wheel cover once it is un-threaded from the wheel nut. If required, the retaining nut can be removed from the wheel cover and replaced as a separate part of the wheel cover.

The bolt-on wheel cover cannot be removed from the wheel until all 5 wheel cover retaining nuts are un-threaded from the wheel mounting nuts. At that time the wheel cover can easily be removed from the wheel by hand.

DIAGNOSIS AND TESTING

WHEEL INSPECTION

Inspect wheels for:

- Excessive run out
- Dents or cracks
- Damaged wheel lug nut holes
- Air Leaks from any area or surface of the rim

NOTE: Do not attempt to repair a wheel by hammering, heating or welding.

If a wheel is damaged an original equipment replacement wheel should be used. When obtaining replacement wheels, they should be equivalent in load carrying capacity. The diameter, width, offset, pilot hole and bolt circle of the wheel should be the same as the original wheel.

DIAGNOSIS AND TESTING (Continued)

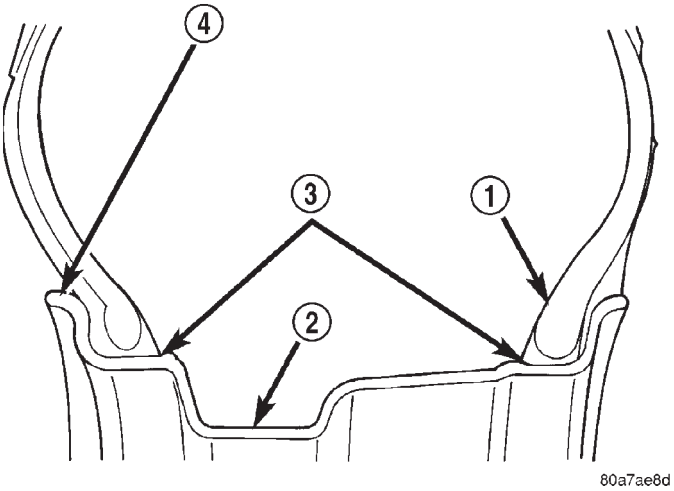

Fig. 2 Safety Rim

1 – TIRE
2 – WELL
3 – SAFETY HUMPS
4 – FLANGE

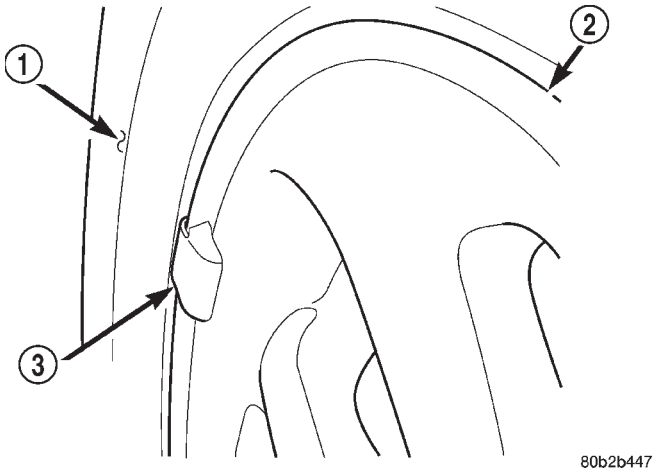

Fig. 3 Aluminum Wheel Weight

1 – TIRE
2 – WHEEL
3 – STYLED WHEEL WEIGHT

WARNING: FAILURE TO USE EQUIVALENT REPLACEMENT WHEELS MAY ADVERSELY AFFECT THE SAFETY AND HANDLING OF THE VEHICLE. USED WHEELS ARE NOT RECOMMENDED. THE SERVICE HISTORY OF THE WHEEL MAY HAVE INCLUDED SEVERE TREATMENT OR VERY HIGH MILEAGE. THE RIM COULD FAIL WITHOUT WARNING.

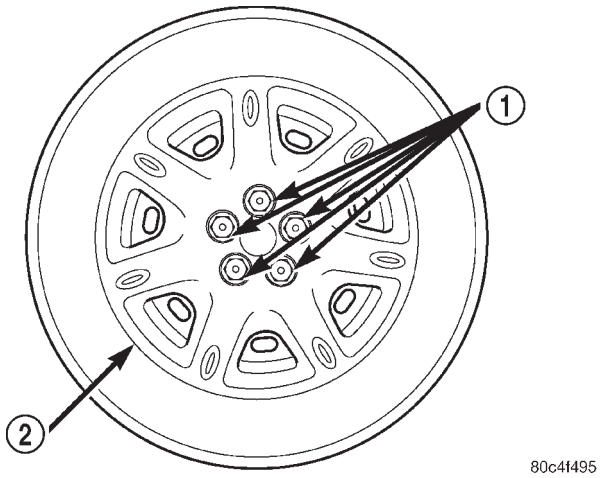

Fig. 4 Wheel Cover (Bolt-On)

1 – WHEEL COVER RETAINING NUTS
2 – BOLT-ON WHEEL COVER

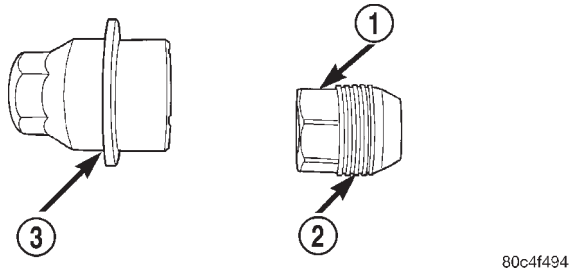

Fig. 5 Wheel Cover Retaining Nut And Wheel Mounting Nut

1 – WHEEL NUT
2 – EXTERNAL THREADS
3 – WHEEL COVER RETAINING NUT

TIRE AND WHEEL RUNOUT

NOTE: Runout should always be measured off the vehicle and on a suitable balance machine.

Radial run out is the difference between the high and low points on the outer edge of the tire or wheel.

Lateral run out is the total side-to-side wobble of the tire or wheel.

Radial run out of more than 1.5 mm (.060 inch) measured at the center line of the tread may cause the vehicle to shake.

Lateral run out of more than 2.0 mm (.080 inch) measured at the side of the tire as close to the tread as possible may cause the vehicle to shake.

Sometimes radial run out can be reduced by relocating the wheel and tire on the wheel studs (See Method 1). If this does not reduce run out to an acceptable level, the tire can be rotated on the wheel. (See Method 2).

DIAGNOSIS AND TESTING (Continued)

METHOD 1 (RELOCATE WHEEL ON HUB)

Check accuracy of the wheel mounting surface; adjust wheel bearings.

Drive vehicle a short distance to eliminate tire flat spotting from a parked position.

Verify all wheel nuts are tightened and torqued in the correct sequence (Fig. 6).

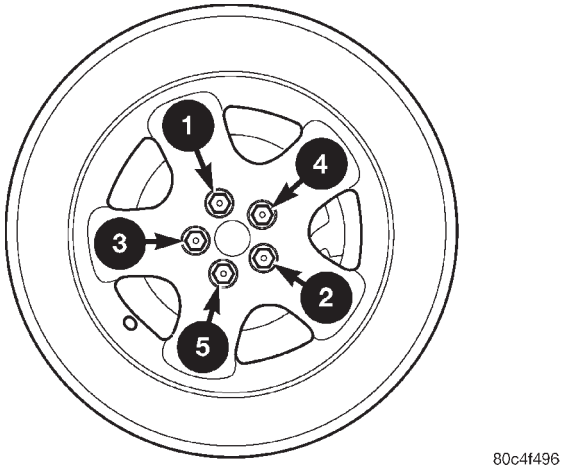

Fig. 6 Wheel Tightening Sequence

Use runout gauge D-128-TR to determine runout (Fig. 7).

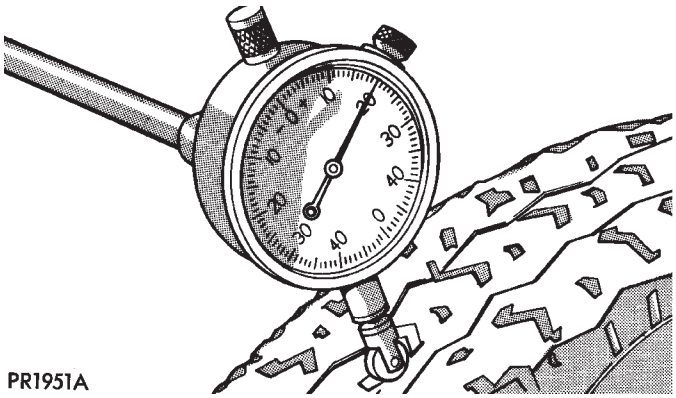

Fig. 7 Run Out Gauge

Relocate the wheel on the mounting studs, two studs over from the original position.

Retighten wheel nuts until all are properly torqued. This will prevent brake distortion.

Check radial runout. If still excessive, mark tire sidewall, wheel, and stud at point of maximum runout (Fig. 8) and proceed to Method 2.

METHOD 2 (RELOCATE TIRE ON WHEEL)

Rotating tire on wheel is particularly effective when there is run out in both tire and wheel.

Remove tire from wheel and remount wheel on hub in former position.

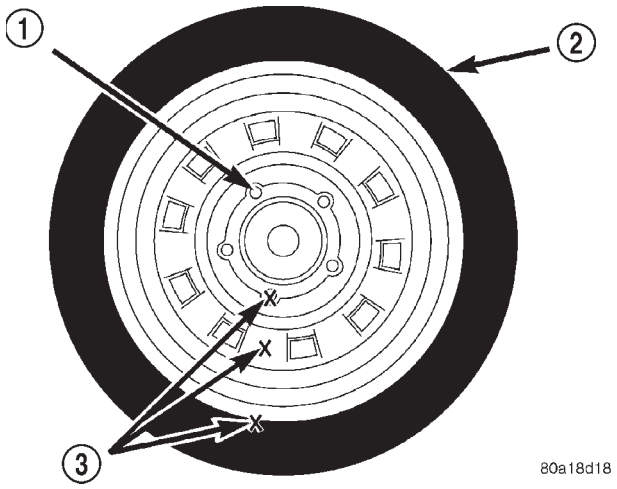

Fig. 8 Chalk Marking On Wheel, Tire And Stud

1 – STUD
2 – TIRE
3 – CHALK MARK LOCATIONS

Check the radial runout of the wheel (Fig. 9). The radial runout should be no more than 0.762 mm (0.030 inch).

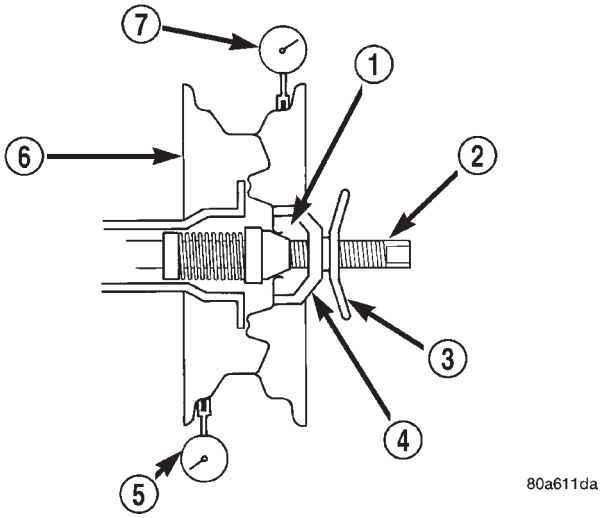

Fig. 9 Checking Wheel Radial Run Out

1 – MOUNTING CONE
2 – SPINDLE SHAFT
3 – WING NUT
4 – PLASTIC CUP
5 – DIAL INDICATOR
6 – WHEEL
7 – DIAL INDICATOR

Check the lateral runout of the wheel (Fig. 10). The lateral run out should be no more than 0.762 mm (0.030 inch).

DIAGNOSIS AND TESTING (Continued)

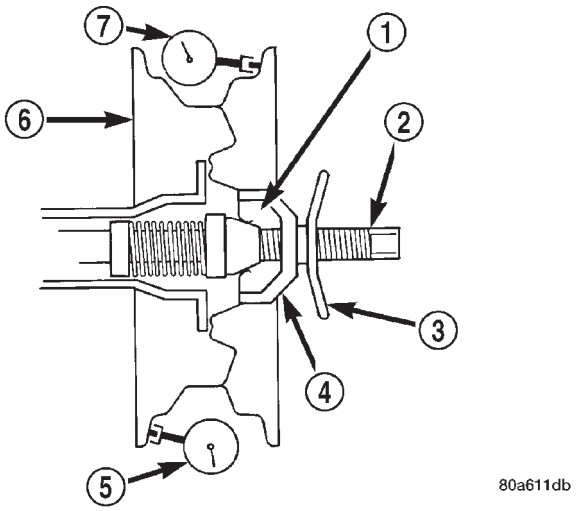

Fig. 10 Checking Wheel Lateral Run Out

1 – MOUNTING CONE
2 – SPINDLE SHAFT
3 – WING NUT
4 – PLASTIC CUP
5 – DIAL INDICATOR
6 – WHEEL
7 – DIAL INDICATOR

If the point of greatest wheel radial runout is near the original chalk mark, remount the tire on the rim 180 degrees from its original position. Recheck the runout. If this does not reduce the runout to an acceptable level, replace the wheel or the tire.

SERVICE PROCEDURES

TIRE AND WHEEL BALANCE

Balancing need is indicated by vibration of seats, floor pan, or steering wheel. The vibration will be noticed mostly when driving over 90 km/h (55 mph) on a smooth road.

It is recommended that a two plane dynamic balancer be used when a wheel and tire assembly require balancing. Static balancing should be used only when a two plane balancer is not available.

The cast aluminum wheels on this vehicle require special balance weights to fit the contour of the wheel flange (Fig. 11).

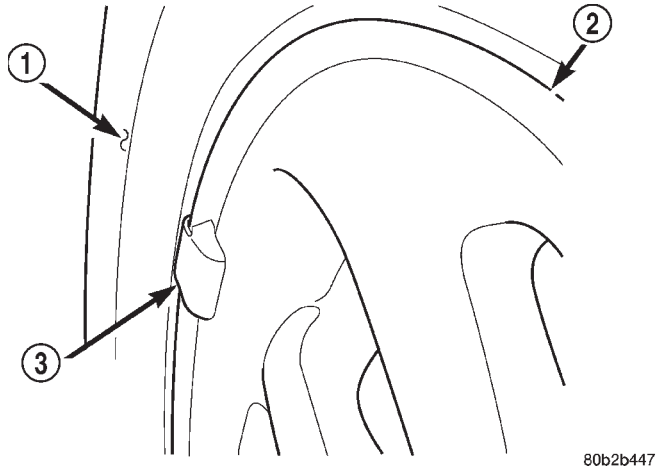

Fig. 11 Aluminum Wheel Weight

1 – TIRE
2 – WHEEL
3 – STYLED WHEEL WEIGHT

Off-vehicle tire and wheel balancing is recommended to be used on this vehicle.

NOTE: If on-vehicle equipment is being used to balance a tire and wheel assembly on the driving axle, remove the opposite tire and wheel from the vehicle.

For static balancing, find the location of heavy spot on tire/wheel causing the imbalance. Counter balance wheel directly opposite the heavy spot. Determine weight required to counterbalance the area of imbalance. Place half of this weight on the **inner** rim flange and the other half on the **outer** rim flange (Fig. 12).

For dynamic balancing, the balancing equipment is designed to indicate the location and amount of weight to be applied to both the inner and outer rim flanges (Fig. 13)

SERVICE PROCEDURES (Continued)

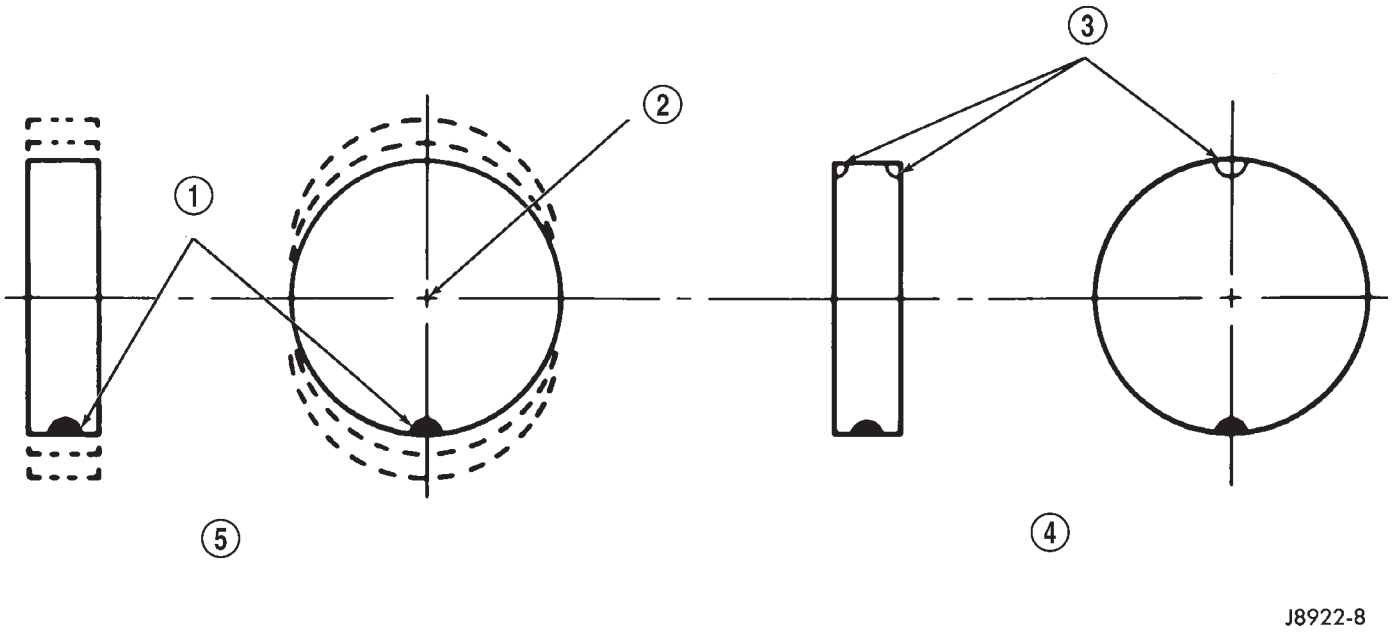

Fig. 12 Static Unbalance & Balance

1 – HEAVY SPOT
2 – CENTER LINE OF SPINDLE
3 – ADD BALANCE WEIGHTS HERE
4 – CORRECTIVE WEIGHT LOCATION
5 – TIRE OR WHEEL TRAMP, OR WHEEL HOP

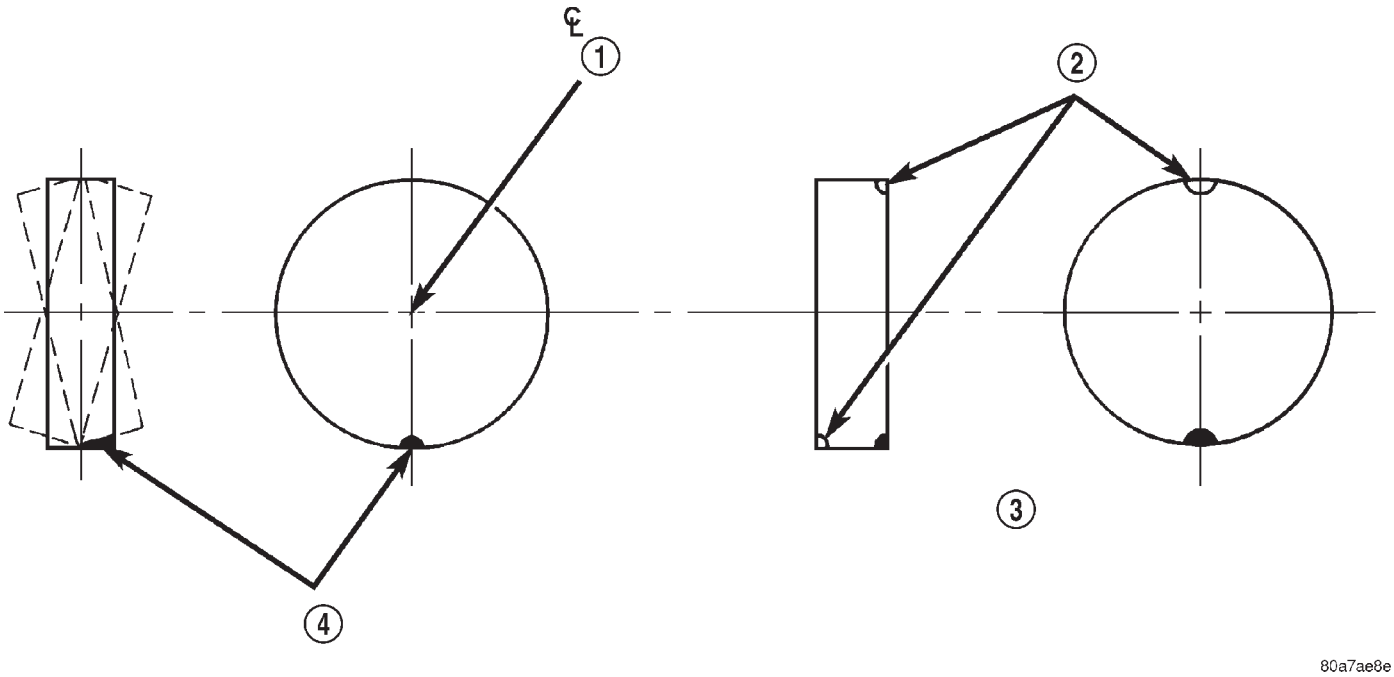

Fig. 13 Dynamic Unbalance & Balance

1 – OF SPINDLE
2 – ADD BALANCE WEIGHTS HERE PER DIRECTION OF DYNAMIC BALANCING EQUIPMENT.
3 – CORRECTIVE WEIGHT LOCATION
4 – HEAVY SPOT WHEEL SHIMMY AND VIBRATION

REMOVAL AND INSTALLATION

WHEEL COVER

REMOVAL

NOTE: When un-threading the wheel cover retaining nuts from the wheel nuts, it is recommended that a hand wrench be used and not an impact wrench. Use of an impact wrench could result in damage to the wheel cover retaining nuts.

(1) Un-thread the 5 nuts attaching the wheel cover to the wheel nuts (Fig. 14).

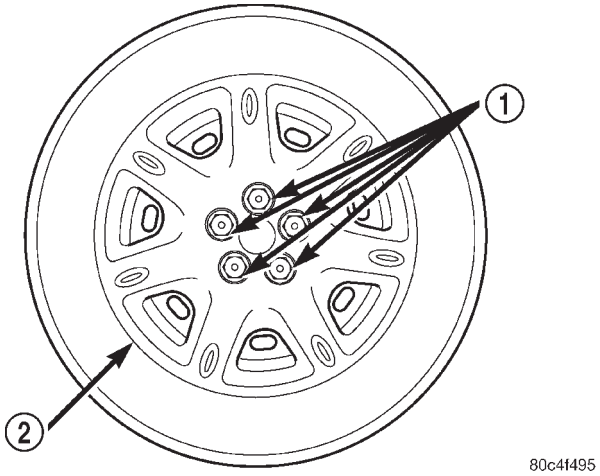

Fig. 14 Wheel Cover Retaining Nuts

1 – WHEEL COVER TRAINING NUTS
2 – BOLT-ON WHEEL COVER

(2) Grasp the wheel cover and pull straight outward from the wheel. This will remove the wheel cover from the wheel.

INSTALLATION

(1) Align the valve notch in the wheel cover with the valve stem on the wheel (Fig. 14). Align the wheel cover retaining nuts with the externally-threaded wheel nuts.

(2) By hand, start to thread all 5 of the wheel cover retaining nuts onto the externally-threaded wheel nuts.

NOTE: When tightening the wheel cover retaining nuts it is recommended that a hand wrench be used and not an impact wrench. Use of an impact wrench could result in damage to the wheel cover retaining nuts.

NOTE: To avoid rattling of the wheel cover, be sure all five retaining nuts are correctly tightened using the procedure described in the following step.

(3) Progressively tighten each of the wheel cover retaining nuts following the pattern shown in the figure (Fig. 15). Repeat the tightening sequence at least one more time. If a retaining nut “jumps” a thread (slips), which is an override feature of the retaining nut, retighten all the nuts again following the proper tightening sequence to a point just prior to the thread slip occurring.

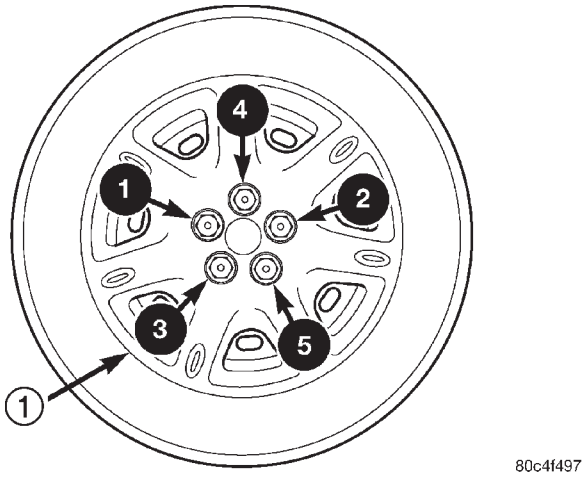

Fig. 15 Nut Tightening Sequence

1 – BOLT-ON WHEEL COVER

WHEEL COVER RETAINING NUT

REMOVAL

(1) Remove the wheel cover from the wheel. Refer to Wheel Cover in this section for the procedure.

NOTE: The retaining nut flange cannot be forced past the large retaining tab. When removing the retaining nut from wheel cover, the flange on the nut must instead be forced past the 2 small retaining tabs.

(2) From the back side of the wheel cover, push outward and tilt the retaining nut sideways forcing the flange on the retaining nut past the 2 small retaining tabs in the retaining nut hole of the wheel cover (Fig. 16), then remove the retaining nut from the wheel cover by pushing or pulling it from the hole in the wheel cover.

INSTALLATION

(1) Install the retaining nut into the hole of wheel cover with the retaining nut flange positioned under the large retaining tab first (Fig. 16), then push the nut flange past the small tabs snapping the nut into place.

(2) Reinstall the wheel cover. Refer to Wheel Cover in this section for the procedure.

REMOVAL AND INSTALLATION (Continued)

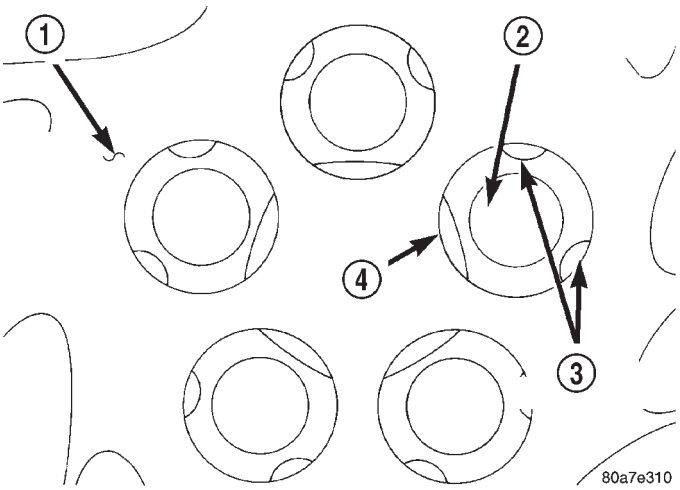

Fig. 16 Wheel Cover Retaining Nut Retention

1 – WHEEL COVER
2 – WHEEL COVER RETAINING NUT
3 – SMALL RETAINING TABS
4 – LARGE RETAINING TAB

TIRE AND WHEEL ASSEMBLY (ALUMINUM WHEEL)

REMOVAL

(1) Raise the vehicle. Refer to Hoisting in the Lubrication And Maintenance section.

(2) Remove the wheel mounting nuts from the studs.

(3) Remove the tire and wheel assembly from the hub.

INSTALLATION

CAUTION: Installing the wheel mounting nuts without having good metal-to-metal contact between the back of the wheel and the hub mounted brake disc or drum could cause the wheel to bind and eventually cause loosening of the wheel mounting nuts.

(1) Install the tire and wheel assembly on the hub studs against the hub mounted brake disc or drum using the hub pilot as a guide.

CAUTION: When installing the tire and wheel assembly, never use oil or grease on studs or nuts.

(2) Install and lightly tighten the wheel mounting nuts in the proper sequence (Fig. 17).

(3) Lower the vehicle.

(4) Progressively tighten the 5 wheel mounting nuts in the proper sequence until tightened to half of the specified torque (Fig. 17). Finally, tighten the wheel nuts in the proper sequence to a torque of 135 N·m (100 ft. lbs.).

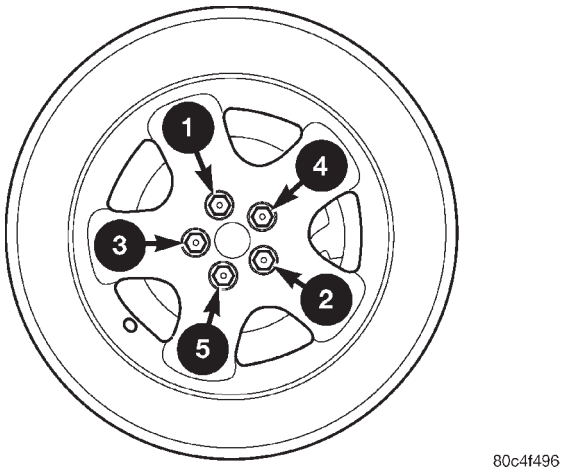

Fig. 17 Wheel Tightening Sequence

TIRE AND WHEEL ASSEMBLY (STEEL WHEEL)

REMOVAL

(1) Raise the vehicle. Refer to Hoisting in the Lubrication And Maintenance section.

CAUTION: When removing the bolt-on wheel cover, do not attempt to pry the wheel cover off the wheel. The wheel cover is retained by special wheel cover retaining nuts.

CAUTION: When removing the bolt-on wheel cover retaining nuts it is recommended that a hand wrench be used and not an impact wrench. Use of an impact wrench could result in damage to the plastic bolt-on wheel cover retaining nuts.

(2) Unthread the 5 nuts attaching the wheel cover to the 5 wheel mounting nuts (Fig. 18).

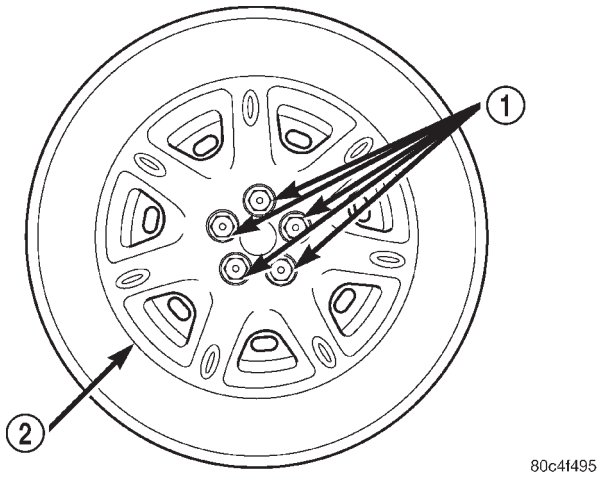

Fig. 18 Wheel Cover Retaining Nuts

1 – WHEEL COVER RETAINING NUTS
2 – BOLT-ON WHEEL COVER

REMOVAL AND INSTALLATION (Continued)

(3) Grasp the wheel cover and pull it straight outward, removing the wheel cover from the wheel.

(4) Remove the wheel mounting nuts from the studs (Fig. 19).

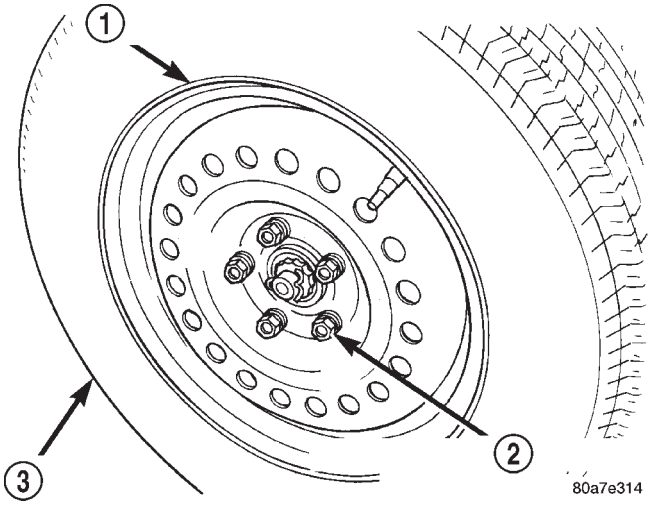

Fig. 19 Wheel Nuts

1 – WHEEL
2 – EXTERNALLY THREADED WHEEL NUTS
3 – TIRE

(5) Remove the tire and wheel assembly from the hub.

INSTALLATION

CAUTION: Installing the wheel mounting nuts without having good metal-to-mental contact between the back of the wheel and the hub mounted brake disc or drum could cause the wheel to bind and eventually cause loosening of the wheel mounting nuts.

(1) Install the tire and wheel assembly on the hub studs against the hub mounted brake disc or drum using the hub pilot as a guide.

CAUTION: When installing the tire and wheel assembly, never use oil or grease on studs or nuts.

(2) Install and lightly tighten the wheel mounting nuts (with external threads) in the proper sequence (Fig. 20).

(3) Lower the vehicle.

(4) Progressively tighten the 5 wheel mounting nuts in the proper sequence until tightened to half of the specified torque (Fig. 20). Finally, tighten the wheel mounting nuts in the proper sequence to a torque of 135 N·m (100 ft. lbs.).

(5) Align the valve notch in the wheel cover with the valve stem on the wheel (Fig. 18). Align the wheel cover retaining nuts with the externally threaded wheel mounting nuts.

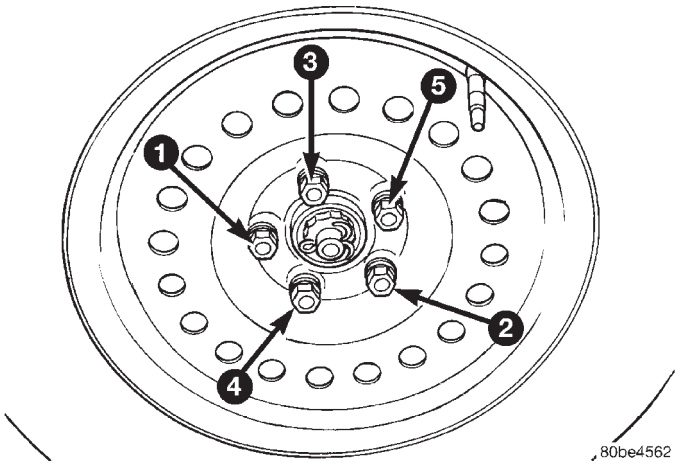

Fig. 20 Wheel Nut Tightening Sequence

(6) By hand, start to thread all 5 of the wheel cover retaining nuts onto the externally threaded wheel mounted nuts.

NOTE: When tightening the wheel cover retaining nuts it is recommended that a hand wrench be used and not an impact wrench. Use of an impact wrench could result in damage to the bolt-on wheel cover retaining nuts.

(7) Progressively tighten each of the wheel cover retaining nuts following the pattern shown in the figure (Fig. 21). Repeat the tightening sequence at least one more time. If a retaining nut “jumps” a thread (slips), which is an override feature of the retaining nut, retighten all the nuts again following the proper tightening sequence to a point just prior to the thread slip occurring.

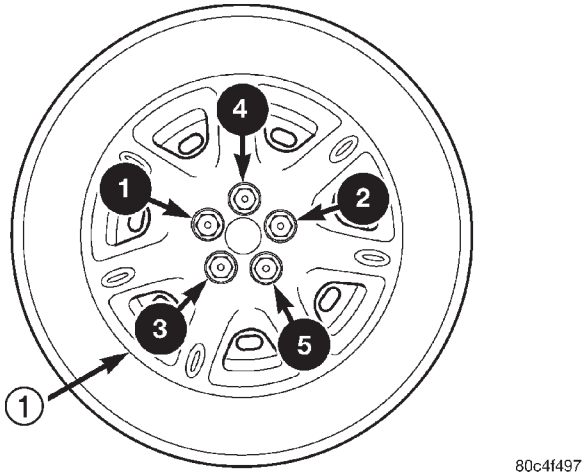

Fig. 21 Nut Tightening Sequence

1 – BOLT-ON WHEEL COVER

CLEANING AND INSPECTION

ALUMINUM WHEEL CARE

Chrome plated and painted aluminum wheels should be cleaned regularly using mild soap and water to maintain their luster and to prevent corrosion.

Care must be taken in the selection of tire and wheel cleaning chemicals and equipment to prevent damage to the wheels. Any of the "DO NOT USE" items listed below WILL damage chrome plated and painted aluminum wheels.

DO NOT USE:

- any abrasive metal cleaner
- any abrasive cleaning pad or brush
- any cleaner that contains an acid (this will immediately react with and discolor the chromium surface)
- chrome polish (unless it is buffed off immediately after application)
- oven cleaner
- a car wash that uses carbide-tipped wheel cleaning brushes

SPECIFICATIONS

WHEEL SPECIFICATIONS

Wheel:

Wheel Mounting Stud Size	M12 x 1.5 mm
Wheel Mounting Nut Hex Size	19 mm
Wheel Mounting Nut Torque	115–155 N·m (85 to 115 ft. lbs.)

BODY

TABLE OF CONTENTS

	page
PAINT	1
STATIONARY GLASS	3
SEATS	9
SUNROOF	13
BODY COMPONENTS	21
SPECIFICATIONS	67

PAINT

TABLE OF CONTENTS

	page
DESCRIPTION AND OPERATION	
PAINT CODE	1
BASE COAT/CLEAR COAT FINISH	1
FINESSE SANDING, BUFFING, AND POLISHING	1
PAINTED SURFACE TOUCH-UP	1
SPECIFICATIONS	
2001 PT PAINT COLOR CODES	2

DESCRIPTION AND OPERATION

PAINT CODE

A paint code is provided on the body code plate located in the engine compartment. Refer to the Introduction section at the front of this manual for body code plate description. The paint and trim codes are also included on the Vehicle Safety Label located on the driver's door or end frame.

BASE COAT/CLEAR COAT FINISH

DESCRIPTION

The original equipment finish is a multi step process that involves cleaning, electrodeposition (E-coat), base coat, and clear coat steps. Additionally, selected areas of the vehicle may be coated with an anti chip finish.

OPERATION

On most vehicles a two part paint application (base coat/clear coat) is used. Color paint that is applied to primer is called base coat. The clear coat protects the base coat from ultraviolet light and provides a durable high gloss finish.

CAUTION: Do not use abrasive chemicals or compounds on painted surfaces. Damage to finish can result.

Do not use harsh alkaline based cleaning solvents on painted surfaces. Damage to finish or color can result.

FINESSE SANDING, BUFFING, AND POLISHING

DESCRIPTION

Minor acid etching, orange peel, or smudging in clear coat or single-stage finishes can be reduced with light finesse sanding, hand buffing, and polishing. **If the finish has been finesse sanded in the past, it cannot be repeated. Finesse sanding operation should be performed by a trained automotive paint technician.**

CAUTION: Do not remove clear coat finish, if equipped. Base coat paint must retain clear coat for durability.

PAINTED SURFACE TOUCH-UP

DESCRIPTION

When a painted metal surface has been scratched or chipped, it should be touched-up as soon as possible to avoid corrosion. For best results, use Mopar® Scratch Filler/Primer, Touch-Up Paints and Clear Top

DESCRIPTION AND OPERATION (Continued)

Coat. Refer to Introduction for Body Code Plate information.

WARNING: USE A OSHA APPROVED BREATHING FILTER WHEN SPRAYING PAINT OR SOLVENTS IN A CONFINED AREA. PERSONAL INJURY CAN RESULT.

OPERATION

(1) Scrape loose paint and corrosion from inside scratch or chip.

(2) Clean affected area with Mopar® Tar/Road Oil Remover, and allow to dry.

(3) Fill the inside of the scratch or chip with a coat of filler/primer. Do not overlap primer onto good surface finish. The applicator brush should be wet enough to puddle-fill the defect without running. Do not stroke brush applicator on body surface. Allow the filler/primer to dry hard.

(4) Cover the filler/primer with color touch-up paint. Do not overlap touch-up color onto the original color coat around the scratch or chip. Butt the new color to the original color, if possible. Do not stroke applicator brush on body surface. Allow touch-up paint to dry hard.

(5) On vehicles without clear coat, the touch-up color can be lightly finesse sanded (1500 grit) and polished with rubbing compound.

(6) On vehicles with clear coat, apply clear top coat to touch-up paint with the same technique as described in Step 4. Allow clear top coat to dry hard. If desired, Step 5 can be performed on clear top coat.

WARNING: AVOID PROLONGED SKIN CONTACT WITH PETROLEUM OR ALCOHOL – BASED CLEANING SOLVENTS. PERSONAL INJURY CAN RESULT.

SPECIFICATIONS

2001 PT PAINT COLOR CODES

EXTERIOR COLORS

DC CODE	EXTERIOR COLOR	DC CODE	EXTERIOR COLOR
DX8	Black Clear Coat	WB7	Patriot Blue Pearl Coat
SW1	Stone White Clear Coat	WEL	Inferno Red Tinted Pearl Coat
TTK	Taupe Frost Metallic Clear Coat	WS2	Bright Silver Metallic Clear Coat
VMT	Deep Cranberry Pearl Coat	XQW	Aquamarine Metallic Clear Coat
VLB	Shale Green Metallic Clear Coat	YY6	Aztec Yellow Pearl Coat

INTERIOR COLORS

DC CODE	INTERIOR COLOR	DC CODE	INTERIOR COLOR
MF1	Light Pearl Beige	WL8	Dark Taupe

STATIONARY GLASS

TABLE OF CONTENTS

page

DESCRIPTION AND OPERATION
WINDSHIELD SAFETY PRECAUTIONS 3
STATIONARY GLASS. 3
REMOVAL AND INSTALLATION
WINDSHIELD. 3
QUARTER WINDOW GLASS 5
REAR WINDOW. 7

DESCRIPTION AND OPERATION

WINDSHIELD SAFETY PRECAUTIONS

WARNING: DO NOT OPERATE THE VEHICLE WITHIN 24 HOURS OF WINDSHIELD INSTALLATION. IT TAKES AT LEAST 24 HOURS FOR URETHANE ADHESIVE TO CURE. IF IT IS NOT CURED, THE WINDSHIELD MAY NOT PERFORM PROPERLY IN AN ACCIDENT.

URETHANE ADHESIVES ARE APPLIED AS A SYSTEM. USE GLASS CLEANER, GLASS PREP SOLVENT, GLASS PRIMER, PVC (VINYL) PRIMER AND PINCH WELD (FENCE) PRIMER PROVIDED BY THE ADHESIVE MANUFACTURER. IF NOT, STRUCTURAL INTEGRITY COULD BE COMPROMISED.

DAIMLERCHRYSLER DOES NOT RECOMMEND GLASS ADHESIVE BY BRAND. TECHNICIANS SHOULD REVIEW PRODUCT LABELS AND TECHNICAL DATA SHEETS, AND USE ONLY ADHESIVES THAT THEIR MANUFACTURES WARRANT WILL RESTORE A VEHICLE TO THE REQUIREMENTS OF FMVSS 212. TECHNICIANS SHOULD ALSO INSURE THAT PRIMERS AND CLEANERS ARE COMPATIBLE WITH THE PARTICULAR ADHESIVE USED.

BE SURE TO REFER TO THE URETHANE MANUFACTURER'S DIRECTIONS FOR CURING TIME SPECIFICATIONS, AND DO NOT USE ADHESIVE AFTER ITS EXPIRATION DATE.

VAPORS THAT ARE EMITTED FROM THE URETHANE ADHESIVE OR PRIMER COULD CAUSE PERSONAL INJURY. USE THEM IN A WELL-VENTILATED AREA.

SKIN CONTACT WITH URETHANE ADHESIVE SHOULD BE AVOIDED. PERSONAL INJURY MAY RESULT.

ALWAYS WEAR EYE AND HAND PROTECTION WHEN WORKING WITH GLASS.

CAUTION: Protect all painted and trimmed surfaces from coming in contact with urethane or primers.

Be careful not to damage painted surfaces when removing moldings or cutting urethane around windshield.

STATIONARY GLASS

DESCRIPTION

Windshields are made of two pieces of glass with a plastic inner layer. Windshields and selected stationary glass are structural members of the vehicle. The windshield glass is bonded to the windshield frame with urethane adhesive.

OPERATION

Windshields and other stationary glass protect the occupants from the effects of the elements. Windshields are also used to retain some airbags in position during deployment. Urethane bonded glass is difficult to salvage during removal. The urethane bonding is difficult to cut or clean from any surface. Before removing the glass, check the availability of replacement components.

REMOVAL AND INSTALLATION

WINDSHIELD

The urethane adhesive holding the windshield to the opening pinch weld (fence) can be cut using a sharp cold knife from the exterior of the vehicle. Using the cold knife method is effective if the windshield is already broken. If the glass must be salvaged, cutting the urethane adhesive from the interior of the vehicle using a reciprocating or oscillating power knife is recommended.

RECOMMENDED TOOLS AND ADHESIVE

POWER KNIFE

- Fein® Power Cutout Knife
- Equalizer® Magnum, Interior Auto Glass Cut Out Knife

REMOVAL AND INSTALLATION (Continued)

ADHESIVE, PRIMER AND CLEANER

The following urethane adhesive systems are OEM certified and conform to the FMVSS 212 windshield retention standard and the FMVSS 216 roof crush standard.

WINDSHIELD REMOVAL – EXTERIOR METHOD

(1) Remove inside rear view mirror.
(2) Remove windshield wiper arms.
(3) Remove cowl cover.
(4) Place protective covers over instrument panel and hood.
(5) Remove windshield A-pillar trim.
(6) Using a sharp cold knife, cut urethane adhesive holding the windshield to the A-pillars, roof header and cowl pinch weld fences (Fig. 1). A power cutting device can be used if available.
(7) Remove windshield from vehicle.

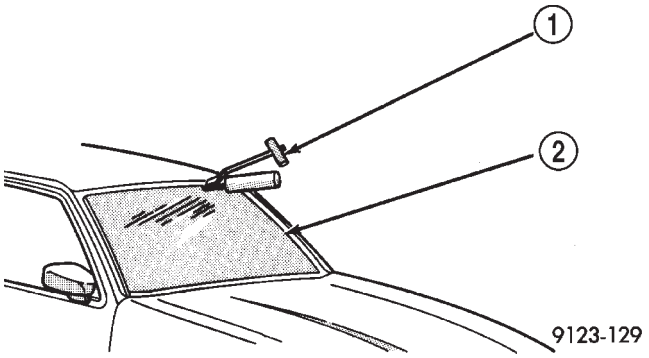

Fig. 1 Cut Urethane Around Windshield

1 – COLD KNIFE
2 – WINDSHIELD

WINDSHIELD REMOVAL - INTERIOR METHOD

(1) Remove inside rear view mirror.
(2) Remove instrument panel top cover, refer to Instrument Panel.
(3) Remove A-pillar trim.
(4) Place protective covers over instrument panel and hood.
(5) Using a reciprocating or oscillating power knife, cut urethane adhesive holding the windshield to the A-pillars, roof header and cowl pinch weld fences. Refer to instructions provided with the equipment being used.
(6) Remove windshield from vehicle.

WINDSHIELD INSTALLATION

CAUTION: Open the left front door glass before installing windshield to avoid pressurizing the passenger compartment. If a door is slammed before urethane bonding is cured, water leaks can result.

Allow the urethane at least 24 hours to cure before returning the vehicle to use.

To avoid stressing the replacement windshield, the urethane bonding material on the windshield fence should be smooth and consistent to the shape of the replacement windshield. The support spacers should be cleaned and properly installed on weld studs or repair screws at bottom of windshield opening.

(1) Place replacement windshield into windshield opening and position glass in the center of the opening against the support spacers.
(2) Verify the glass lays evenly against the pinch weld fence at the sides, top and bottom of the replacement windshield. If not, the pinch weld fence must be formed to the shape of the new glass.
(3) Remove replacement windshield from windshield opening.
(4) Position the windshield inside up on a suitable work surface with two padded, wood 10 cm by 10 cm by 50 cm (4 in. by 4 in. by 20 in.) blocks, placed parallel 75 cm (2.5 ft.) apart (Fig. 2).

WARNING: DO NOT USE SOLVENT BASED GLASS CLEANER TO CLEAN WINDSHIELD BEFORE APPLYING GLASS PREP AND PRIMER. POOR ADHESION CAN RESULT.

(5) Clean inside of windshield with ammonia based glass cleaner and lint-free cloth.
(6) Apply molding to Top of windshield.
(7) Apply Glass Prep adhesion promoter 25 mm (1 in.) wide around perimeter of windshield and wipe with clean/dry lint-free cloth until no streaks are visible.
(8) Apply Glass Primer 25 mm (1 in.) wide around perimeter of windshield. Allow at least three minutes drying time.
(9) Using a razor knife, remove as much original urethane as possible. Do not damage paint on windshield fence.
(10) Apply pinch weld primer 15 mm (.75 in.) wide around the windshield fence. Allow at least three minutes drying time.
(11) Apply a 10 mm (0.4 in.) bead of urethane on center line of windshield fence.
(12) With the aid of a helper, position the windshield over the windshield opening. Align the reference marks at the bottom of the windshield to the support spacers.
(13) Slowly lower windshield glass to windshield opening fence. Guide the molding into proper position as necessary. Push windshield inward molding is flush to roof line and A-pillars (Fig. 3).
(14) Clean access urethane from exterior with Mopar®, Super Clean or equivalent.

REMOVAL AND INSTALLATION (Continued)

(15) Apply 150 mm (6 in.) lengths of 50 mm (2 in.) masking tape spaced 250 mm (10 in.) apart to hold molding in place until urethane cures.

(16) Install A-pillar moldings.

(17) Install cowl cover and wipers.

(18) Install inside rear view mirror.

(19) After urethane has cured, remove tape strips and water test windshield to verify repair.

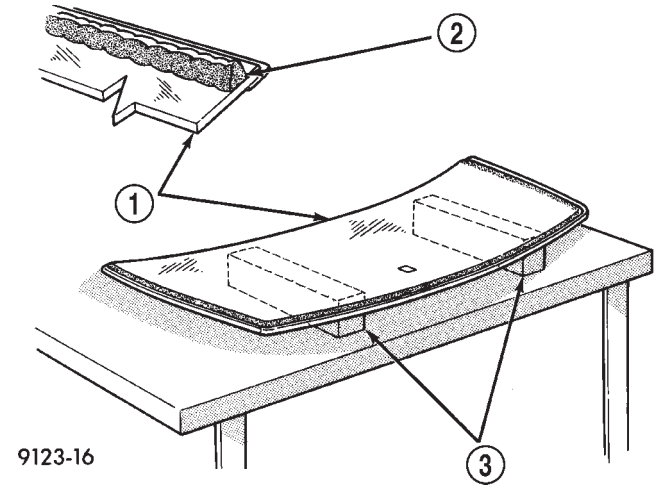

Fig. 2 Work Surface Set up and Molding Installation

1 – WINDSHIELD AND MOULDINGS
2 – URETHANE BEAD AROUND GLASS 7mm (.3 in.) FROM EDGE
3 – BLOCKS

QUARTER WINDOW GLASS

Refer to the Windshield Removal procedure for a description of tools and adhesive systems that are recommended for use in this procedure.

REMOVAL

(1) Open liftgate

(2) Remove C & D Pillar upper trim panel (Fig. 4).

(3) Remove lower quarter trim panel as necessary (Fig. 5).

(4) Remove nuts attaching quarter window glass. (Fig. 6).

WARNING: WEAR EYE AND HAND PROTECTION WHEN HANDLING SAFETY GLASS. PERSONAL INJURY CAN RESULT.

CAUTION: Do not damage body or trim finish when cutting out glass or applying fence primer.

(5) Cut the sealer tape around the perimeter of the quarter window glass. Refer to Windshield Removal for proper procedures.

(6) Remove the quarter window glass from the vehicle.

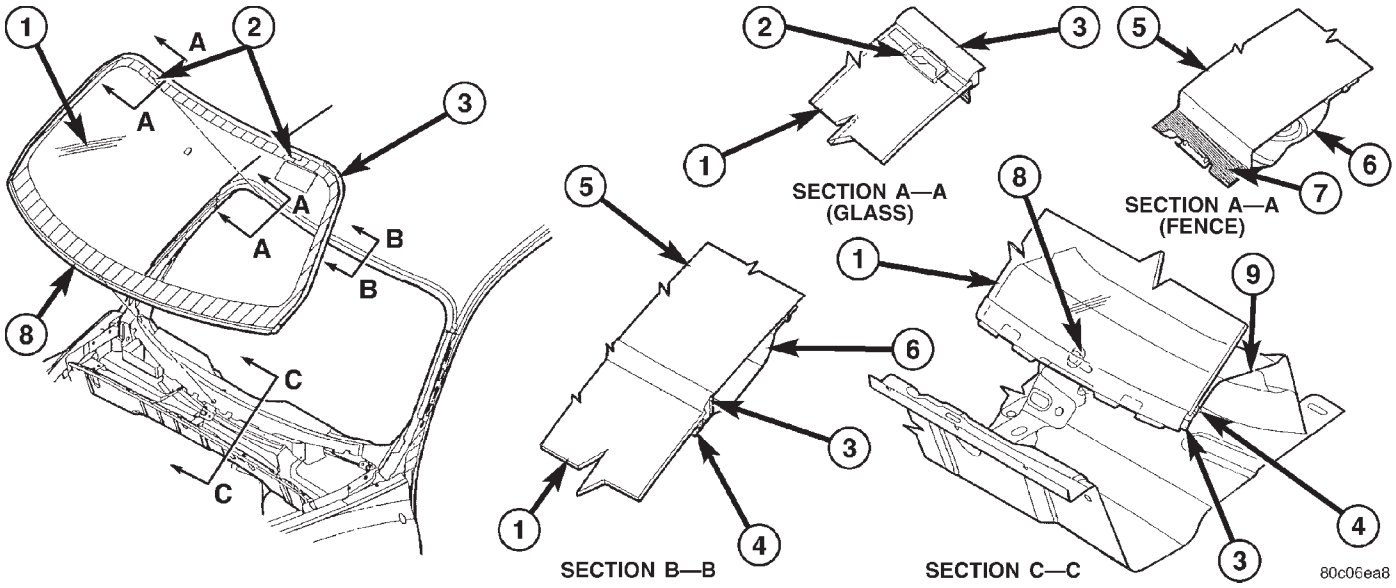

Fig. 3 Lower Windshield Into Position

1 – WINDSHIELD GLASS
2 – WINDSHIELD ENCAPSULATION ROOF HOOKS
3 – WINDSHIELD ENCAPSULATION
4 – ADHESIVE HIGH VISCOSITY
5 – ROOF OUTER PANEL
6 – WINDSHIELD OPENING UPPER FRAME
7 – CLEAN UP WITH VM & P NAPTHA/PRIMER BLACK OUT GLASS PAINT

REMOVAL AND INSTALLATION (Continued)

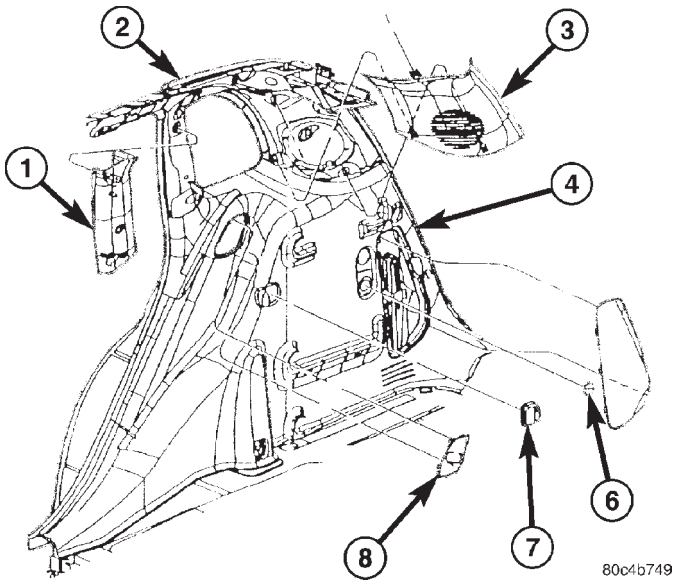

Fig. 4 Quarter Trim Panel

1 – C-PILLAR UPPER TRIM PANEL
2 – REAR QUARTER PANEL
3 – D-PILLAR UPPER TRIM PANEL
4 – QUARTER LOWER TRIM PANEL
5 – JACK STORAGE ACCESS DOOR
6 – QUARTER TRIM PANEL LOWER PLUG
7 – VERTICAL BUMPER

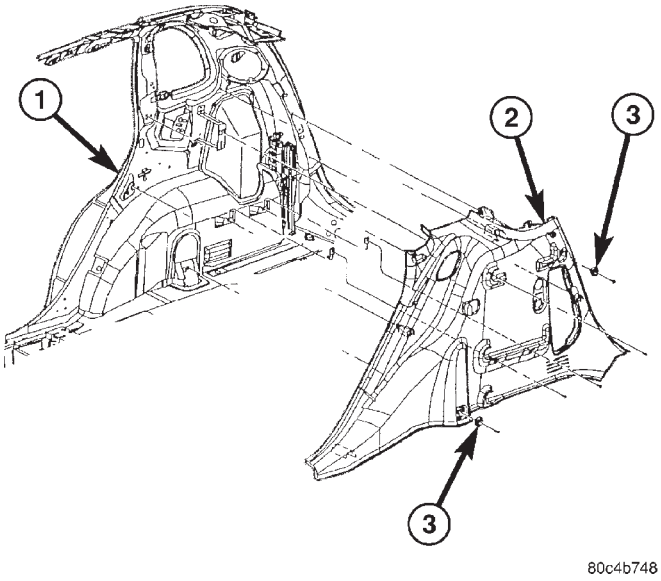

Fig. 5 Lower Quarter Trim

1 – REAR QUARTER PANEL
2 – REAR QUARTER TRIM PANEL
3 – CARGO TIE DOWN QUARTER TRIM LOWER LOOP

INSTALLATION

(1) Prepare the work area, window fence, and glass the same way as described in the Windshield Removal procedure.

(2) Apply a 10 mm (0.4 in.) bead of sealer tape around the perimeter of the glass (Fig. 6).

(3) Place quarter window glass into position.

(4) Install quarter window glass attaching nuts.

(5) Water test quarter window glass to verify repair.

(6) Install lower quarter trim, and C& D-Pillar trim (Fig. 4) and (Fig. 5).

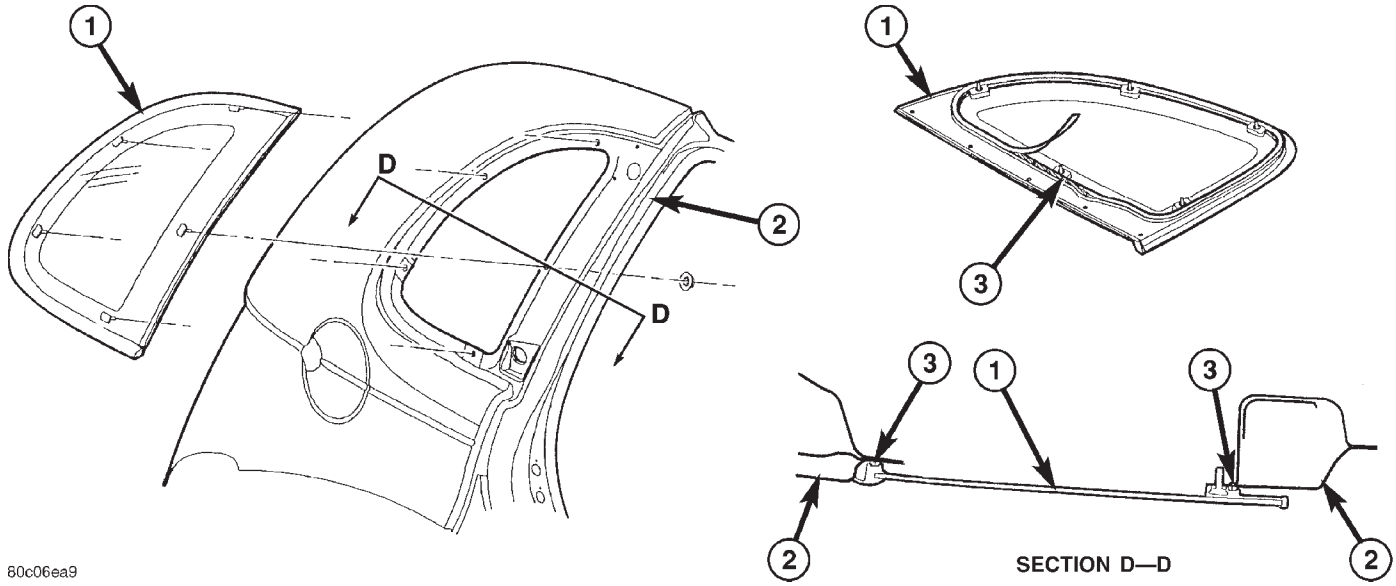

Fig. 6 Quarter Window Glass

1 – QUARTER WINDOW GLASS
2 – C-PILLAR
3 – SEALER TAPE

REMOVAL AND INSTALLATION (Continued)

(7) Close liftgate.

REAR WINDOW

WARNING: DO NOT OPERATE THE VEHICLE WITHIN 24 HOURS OF WINDSHIELD INSTALLATION. IT TAKES AT LEAST 24 HOURS FOR URETHANE ADHESIVE TO CURE. IF IT IS NOT CURED, THE WINDSHIELD MAY NOT PERFORM PROPERLY IN AN ACCIDENT. BE SURE TO REFER TO THE URETHANE MANUFACTURER'S DIRECTIONS FOR CURING TIME SPECIFICATIONS, AND DO NOT USE ADHESIVE AFTER ITS EXPIRATION DATE.

CAUTION: Open the left front door glass before installing the rear window to avoid pressurizing the passenger compartment if a door is slammed before the urethane bonding is fully cured. Water leaks can result

Refer to the Windshield Removal procedure for a description of tools and adhesive systems that are recommended for use in this procedure.

REMOVAL

(1) Remove liftgate trim panels (Fig. 7).

(2) Disconnect wire connectors from rear window defogger (Fig. 8)

(3) Disconnect and remove CHMSL lamp.

WARNING: WEAR EYE AND HAND PROTECTION WHEN HANDLING SAFETY GLASS. PERSONAL INJURY CAN RESULT.

CAUTION: Do not damage body or trim finish when cutting out glass or applying fence primer.

(4) Cut the urethane around the perimeter of the rear window glass. Refer to Windshield for proper procedures.

(5) Remove the rear window from the vehicle.

(6) Prepare the work area, window fence, and glass the same way as described in the Windshield Installation procedure.

INSTALLATION

(1) Install the Liftgate window molding on glass.

(2) Apply a 10 mm (0.4 in.) bead of urethane around the perimeter of the glass.

(3) Place liftgate window glass into position (Fig. 9)

(4) Install the glass in the same manner described in the Windshield Install.

(5) Connect rear window defogger wiring (Fig. 8)

(6) After urethane has cured, water test rear window to verify repair. Verify rear window defogger operation.

(7) Install and connect the CHMSL lamp.

(8) Install liftgate trim panels (Fig. 7).

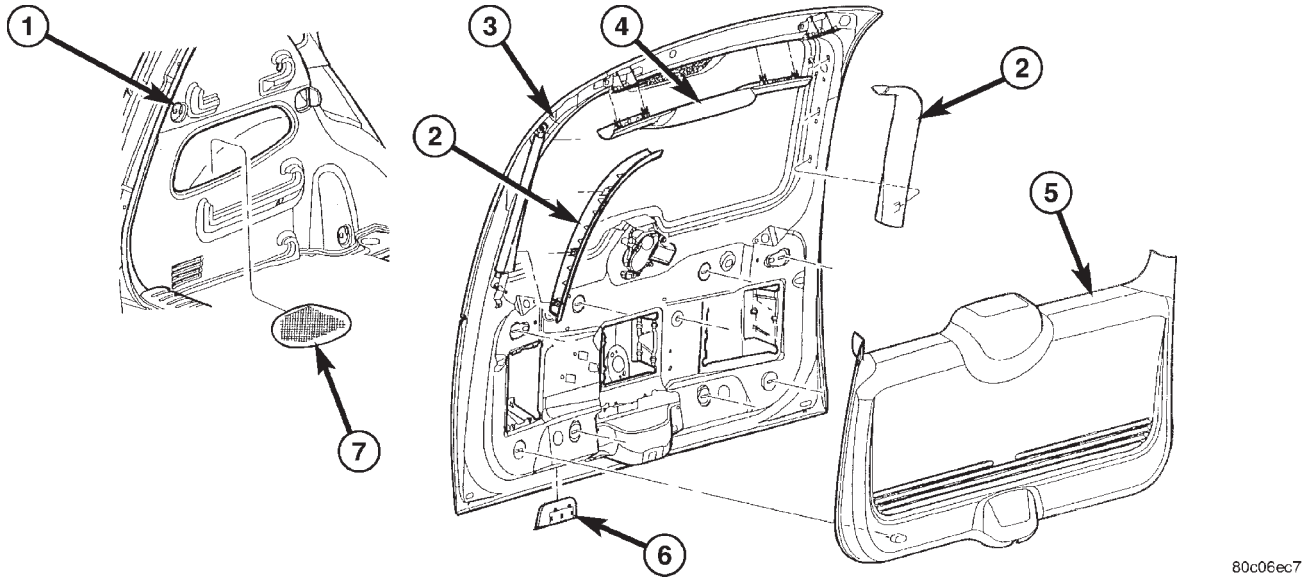

Fig. 7 Liftgate Trim Panels

1 – EDGE OF LIFTGATE TROUGH
2 – LIFTGATE HALO
3 – LIFTGATE
4 – CHMSL COVER TRIM
5 – LIFTGATE TRIM PANEL
6 – LIFTGATE PULL CUP
7 – REAR CONVENIENCE BEZEL

REMOVAL AND INSTALLATION (Continued)

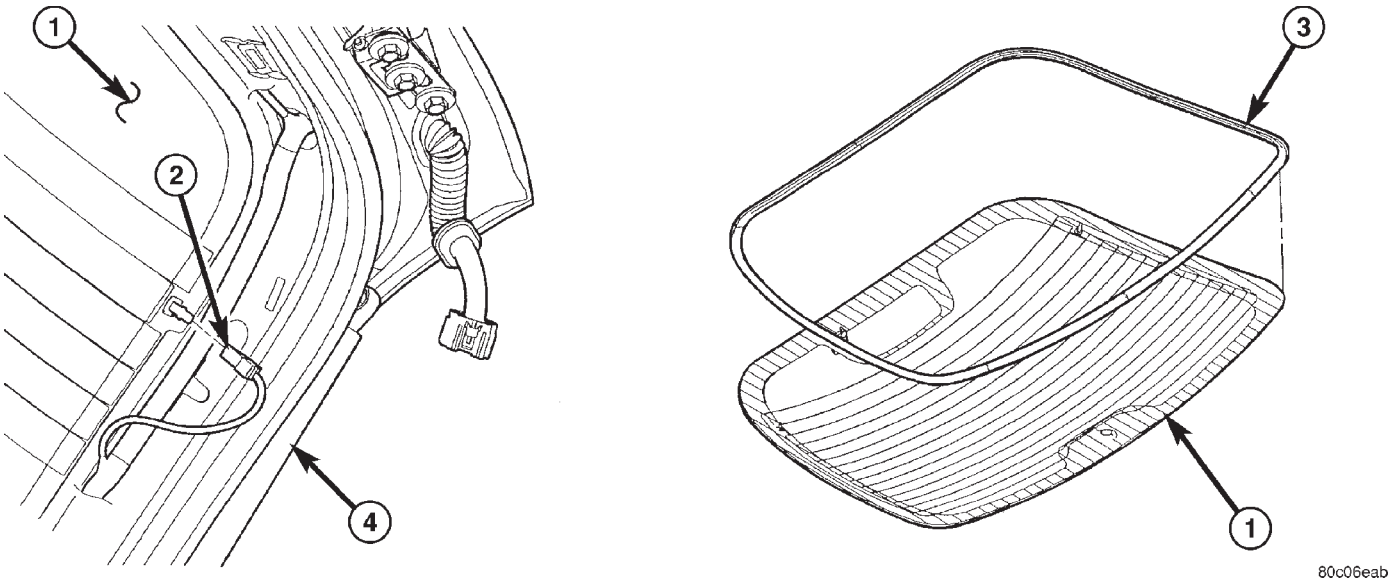

Fig. 8 Rear Window Glass

1 – LIFTGATE WINDOW GLASS
2 – REAR WINDOW DEFOGGER CONNECTOR
3 – LIFTGATE GLASS MOLDING
4 – LIFTGATE INNER PANEL

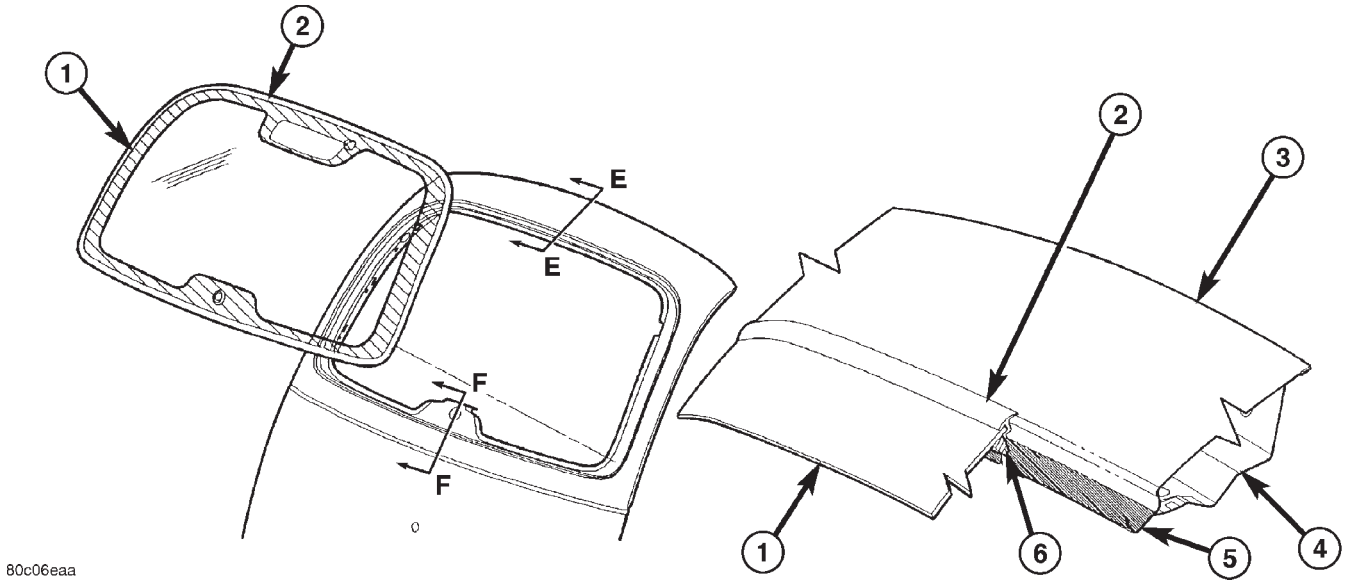

Fig. 9 Liftgate Window Glass Installation

1 – LIFTGATE WINDOW GLASS
2 – LIFTGATE GLASS MOLDING
3 – LIFTGATE OUTER PANEL
4 – LIFTGATE INNER PANEL
5 – CLEAN WITH VM & P NAPTHA & PRIMER BLACK OUT GLASS PAINT
6 – HIGH VISCOSITY ADHESIVE

SEATS

TABLE OF CONTENTS

page

DESCRIPTION AND OPERATION
SEAT SYSTEMS 9
REMOVAL AND INSTALLATION
FRONT SEAT. 9
FRONT SEAT HEAD RESTRAINT. 10
FRONT SEAT BACK. 10
FRONT SEAT BACK COVER 10
FRONT SEAT CUSHION COVER 11
FRONT SEAT CUSHION. 11
REAR SEAT 11
REAR SEAT BACK 11
REAR SEAT BACK COVER 12
REAR SEAT CUSHION. 12
REAR SEAT CUSHION COVER 12
REAR SEAT PIVOT BEZEL 12

DESCRIPTION AND OPERATION

SEAT SYSTEMS

DESCRIPTION

Seat modules are made up of a seat frame, seat cushion, seat back cushion, a covering material, and the electrical components used for power operation, if equipped. Some seat systems also contain seat belt components and supplemental restraint systems. Some seats also have heater elements. The element is an integral part of the seat cover and serviced as a heated seat cover. Refer to Heated Seat for test procedures, and electrical components.

OPERATION

Seat assemblies transport the occupants in comfort and safety. Seat assemblies also help position occupants correctly in the event of airbag deployment. Seat cushions, coverings, and electrical components are serviceable. Refer to the appropriate procedure for service.

REMOVAL AND INSTALLATION

FRONT SEAT

WARNING: BEFORE SERVICING THE SEAT THE AIRBAG SYSTEM MUST BE DISARMED. FAILURE TO DO SO MAY RESULT IN ACCIDENTAL DEPLOYMENT OF THE AIRBAG AND POSSIBLE PERSONAL INJURY. REFER TO RESTRAINT SYSTEMS FOR SERVICE PROCEDURES.

REMOVAL

(1) Move seat to forward position.
(2) Remove bolts attaching rear of the seat track.
(3) Move seat to rearward position.
(4) Remove bolts attaching front of seat track to floor (Fig. 1).
(5) Disengage electrical connectors, if equipped.
(6) Remove seat from vehicle.

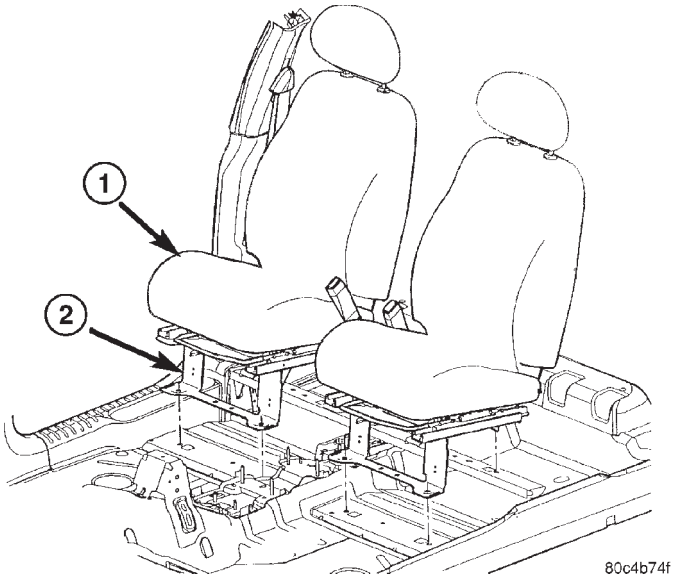

Fig. 1 Front Seat

1 – FRONT SEAT ASSEMBLY
2 – FRONT SEAT RISER

INSTALLATION

(1) Place seat into position in vehicle. Do not use the head restraint, side shield, recliner handle, or the adjuster lift bar to move the seat (Fig. 1).
(2) Engage electrical connectors, if equipped.
(3) Install bolts attaching seat track to floor crossmember. Tighten front seat bolt to 55 N·m (40 ft. lbs.) torque.
(4) Install rear seat track attaching bolts. Tighten rear seat bolts to 55 N·m (40 ft. lbs.) torque.

REMOVAL AND INSTALLATION (Continued)

FRONT SEAT HEAD RESTRAINT

REMOVAL

(1) Raise head restraint slightly.
(2) Insert a stiff wire into the hole on the right hand side head restraint sleeve/guide and push to release latch.
(3) At the same time, press the button on the head restraint sleeve/guide left hand side and pull upward to release the head restraint.
(4) Remove head restraint from seat back.

INSTALLATION

(1) Place head restraint in position.
(2) Push head restraint down into the lock position.
(3) Raise head restraint to ensure it locks at the last stop.

FRONT SEAT BACK

WARNING: BEFORE SERVICING THE SEAT BACK THE AIRBAG SYSTEM MUST BE DISARMED. FAILURE TO DO SO MAY RESULT IN ACCIDENTAL DEPLOYMENT OF THE AIRBAG AND POSSIBLE PERSONAL INJURY. REFER TO RESTRAINT SYSTEMS FOR SERVICE PROCEDURES.

CAUTION: Do not reuse the recliner assembly attaching bolts.

REMOVAL

(1) Remove seat from vehicle.
(2) Remove seat cushion side shields.
(3) Remove bolts attaching recliner to seat back cushion frame.
(4) Remove inboard pivot bolt.
(5) Disconnect any electrical connectors to the seat back, if equipped.
(6) Remove seat back from seat cushion.

INSTALLATION

(1) Position seat back on cushion.
(2) Connect electrical connectors to the seat back, if equipped.
(3) Install inboard pivot bolt. Tighten bolt to 40 N·m (30 ft. lbs.) torque.
(4) Install bolts attaching recliner to seat cushion frame. Tighten bolts to 12 N·m (9 ft. lbs.) torque.
(5) Install seat cushion side shields.
(6) Install seat in vehicle.

FRONT SEAT BACK COVER

WARNING: BEFORE SERVICING THE SEAT BACK COVER THE AIRBAG SYSTEM MUST BE DISARMED. FAILURE TO DO SO MAY RESULT IN ACCIDENTAL DEPLOYMENT OF THE AIRBAG AND POSSIBLE PERSONAL INJURY. REFER TO RESTRAINT SYSTEMS FOR SERVICE PROCEDURES.

REMOVAL

(1) Remove seat from vehicle.
(2) Remove head restraint.
(3) Remove front seat back.
(4) Disengage the J-strap retainer.
(5) Roll cover upward to hog rings. Cut hog rings to free cover (Fig. 2).
(6) Roll cover to top of seat back and remove head restraint sleeve guides.
(7) Remove cover from seat back.

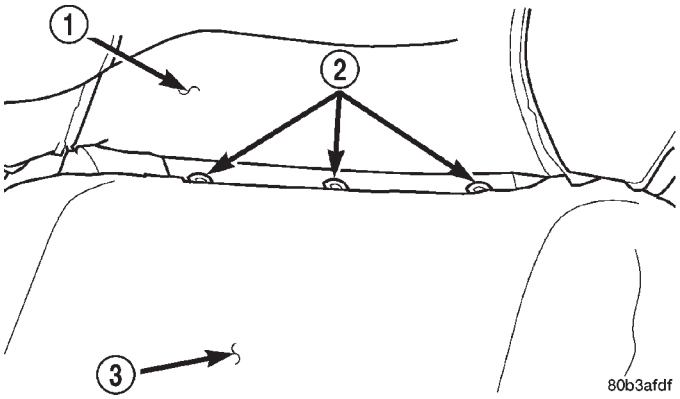

Fig. 2 Front Seat Back Hog Rings

1 – SEAT COVER
2 – HOG RINGS
3 – CUSHION

INSTALLATION

CAUTION: Do not reuse the recliner assembly attaching bolts.

(1) Position cover at the top of seat back.
(2) Carefully roll cover down to the area that hog rings are to be installed (Fig. 2).
(3) Install hog rings.
(4) Roll cover downward.
(5) Engage the J-strap retainer
(6) Install new head restraint sleeve guides.
(7) Install seat back to seat cushion. Tighten bolts to 40 N·m (30 ft. lbs.) torque.
(8) Install seat in vehicle.
(9) Install head restraint.
(10) Check seat back and headrest operation.

REMOVAL AND INSTALLATION (Continued)

FRONT SEAT CUSHION COVER

REMOVAL

(1) Remove seat from vehicle.
(2) Remove front seat cushion side shields.
(3) Remove seat back.
(4) Remove track and recliner assembly.
(5) Disengage J-strap attaching seat cover from the seat cushion frame.
(6) Pull cover off to the hog rings.
(7) Cut hog rings attaching seat cover to seat cushion pad.
(8) Remove seat cushion cover from seat cushion.

INSTALLATION

(1) Position seat cover on cushion.
(2) Align seat cover with cushion alignment indentations.
(3) Install hog rings.
(4) Engage J-strap attaching seat cover to front of seat cushion frame.
(5) Install track and recliner assembly. Tighten front track to pan bolts to 12 N·m (9 ft. lbs.) torque.
(6) Install seat back.
(7) Install front seat cushion side shields.
(8) Install seat in vehicle.

FRONT SEAT CUSHION

REMOVAL

(1) Disengage electrical connectors, if equipped.
(2) Remove seat from vehicle.
(3) Remove front seat cushion side shield.
(4) Remove seat back.
(5) Remove track and recliner assembly.
(6) Disengage electrical connectors for heated seat element, if equipped. Remove seat cushion (Fig. 3).

INSTALLATION

(1) Connect seat cushion heater element connector, if equipped. Install seat cushion.
(2) Install track and recliner assembly. Tighten bolts to 12 N·m (9 ft. lbs.) torque.
(3) Install seat back. Tighten bolts to 40 N·m (30 ft. lbs.) torque.
(4) Install cushion side shields.
(5) Install seat in vehicle.

REAR SEAT

REMOVAL

(1) Fold seat back down and then roll forward to access disengage hooks (Fig. 4).
(2) Disengage hooks and remove seat from vehicle.

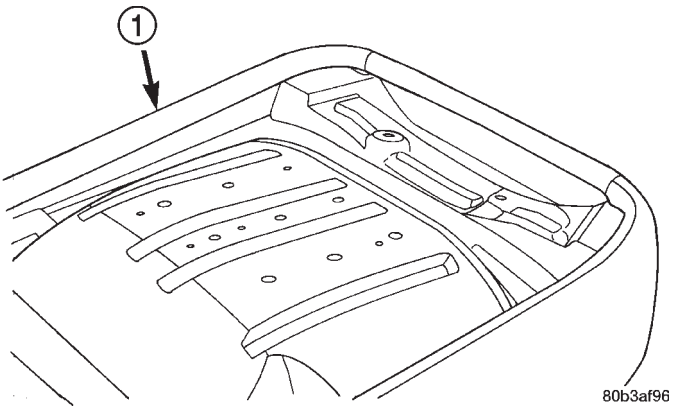

Fig. 3 Front Seat Cushion

1 – FRONT SEAT CUSHION

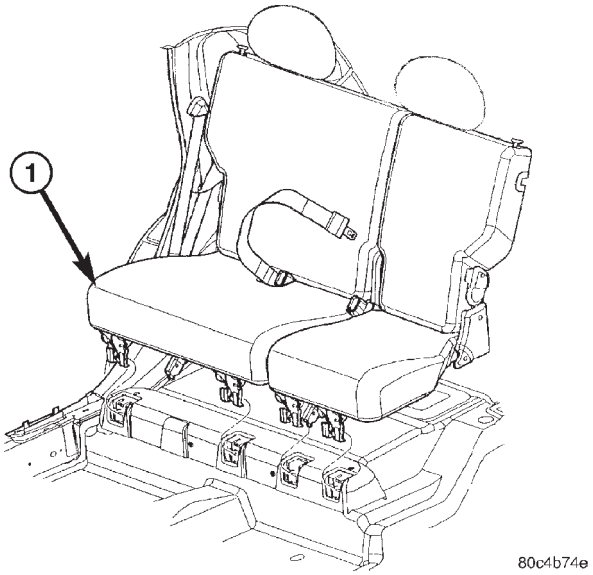

Fig. 4 Rear Seat

1 – REAR SEAT

INSTALLATION

(1) Place rear seat back into position in vehicle (Fig. 4).
(2) Push seat downward to engage hooks.

REAR SEAT BACK

REMOVAL

(1) Remove seat from vehicle.
(2) Remove seat cushion side shields.
(3) Remove bolts attaching recliner to seat back cushion frame.
(4) Remove inboard pivot bolt.
(5) Remove seat back from seat cushion.

INSTALLATION

(1) Position seat back on cushion.

REMOVAL AND INSTALLATION (Continued)

(2) Install inboard pivot bolt. Tighten bolt to 40 N·m (30 ft. lbs.) torque.
(3) Install bolts attaching recliner to seat cushion frame. Tighten bolts to 12 N·m (9 ft. lbs.) torque.
(4) Install rear seat cushion side shields.
(5) Install seat in vehicle.

REAR SEAT BACK COVER

REMOVAL

(1) Remove seat from vehicle.
(2) Remove head restraint.
(3) Remove rear seat back.
(4) Disengage the J-strap retainer.
(5) Roll cover upward to hog rings. Cut hog rings to free cover.
(6) Roll cover to top of seat back and remove head restraint sleeve guides.
(7) Remove cover from seat back.

INSTALLATION

(1) Position cover at the top of seat back.
(2) Carefully roll cover down to the area that hog rings are to be installed.
(3) Install hog rings.
(4) Roll cover downward.
(5) Engage the J-strap retainer
(6) Install new head restraint sleeve guides.
(7) Install seat back to seat cushion. Tighten bolts to 40 N·m (30 ft. lbs.) torque.
(8) Install seat in vehicle.
(9) Install head restraint.
(10) Check seat back and headrest operation.

REAR SEAT CUSHION

REMOVAL

(1) Remove seat from vehicle.
(2) Remove rear seat cushion side shields.
(3) Remove seat back.
(4) Remove rear seat and track assembly.
(5) Disengage J-strap attaching seat cover from the seat cushion frame.
(6) Pull cover off to the hog rings.
(7) Cut hog rings attaching seat cover to seat cushion pad.
(8) Remove seat cushion cover from seat cushion.

INSTALLATION

(1) Position seat cover on cushion.
(2) Align seat cover with cushion alignment indentations.
(3) Install hog rings.
(4) Engage J-strap attaching seat cover to cushion frame.
(5) Install rear seat and track assembly. Tighten front track to pan bolts to 12 N·m (9 ft. lbs.) torque.
(6) Install seat back.
(7) Install rear seat cushion side shields.
(8) Install seat in vehicle.

REAR SEAT CUSHION COVER

REMOVAL

(1) Remove seat from vehicle.
(2) Remove rear seat cushion side shields.
(3) Remove seat back.
(4) Remove track assembly.
(5) Disengage J-strap attaching seat cover from the seat cushion frame.
(6) Pull cover off to the hog rings.
(7) Cut hog rings attaching seat cover to seat cushion pad.
(8) Remove seat cushion cover from seat cushion.

INSTALLATION

(1) Position seat cover on cushion.
(2) Align seat cover with cushion alignment indentations.
(3) Install hog rings.
(4) Engage J-strap attaching seat cover to front of seat cushion frame.
(5) Install track assembly. Tighten front track to pan bolts to 12 N·m (9 ft. lbs.) torque.
(6) Install seat back.
(7) Install rear seat cushion side shields.
(8) Install seat in vehicle.

REAR SEAT PIVOT BEZEL

REMOVAL

(1)
(1) Fold the rear seats forward.
(2) Remove the seat to access the proper bezel.
(3) Using a trim stick, to disengage bezel(s).
(4) Remove bezel from vehicle.

INSTALLATION

(1) Place bezel(s) into position.
(2) Press down to engage bezel(s) into position.
(3) Install rear seat(s).
(4) Place rear seats into position.

SUNROOF

TABLE OF CONTENTS

page

DESCRIPTION AND OPERATION
SUNROOF OPERATION 13
SUNROOF OPERATION INSTRUCTIONS 14
DIAGNOSIS AND TESTING
DIAGNOSTIC PROCEDURES 14
WATER DRAINAGE AND WIND NOISE DIAGNOSIS 16
REMOVAL AND INSTALLATION
SUNROOF MODULE ASSEMBLY 16
SUNROOF ELECTRONICS MODULE ASSEMBLY 16
SUNROOF DRIVE MOTOR 17
SUNROOF GLASS PANEL 17
SUNROOF SUNSHADE 17
SUNROOF GLASS PANEL SEAL 18
SUNROOF OPENING TRIM LACE 18
SUNROOF HOUSING DRAIN HOSE 18
SUNROOF CONTROL SWITCH 19
SUNROOF WIND DEFLECTOR 19
ADJUSTMENTS
SUNROOF GLASS PANEL ADJUSTMENT 20

DESCRIPTION AND OPERATION

SUNROOF OPERATION

DESCRIPTION

WARNING: Keep fingers and other body parts out of sunroof opening at all times.

The sunroof features a power sliding glass panel and a sunshade which can be manually positioned anywhere along its travel, rearward of glass panel front edge.

The sunroof is electrically operated from two switches located on the windshield header, rearward of the map lamp. To operate the sunroof the ignition switch must be in either the Accessory or On/Run position. One switch (vent) is a push button type and opens the sunroof to the vent position only. The other switch (open/close) is a rocker type for opening and closing the sunroof. Pressing and releasing the open button once the sunroof will express open and the wind deflector will raise. If the button is pressed a second time the sunroof will stop in that position. Pressing and holding the close button will close the sunroof. If the close button is released the sunroof will stop in that position.

DESCRIPTION AND OPERATION (Continued)

SUNROOF OPERATION INSTRUCTIONS

SWITCH INPUTS				
		OPEN	CLOSE	VENT
	FULL VENT	Push and hold Switch Until Glass Stops in Flush Closed Position Glass Will Then Express Open	Push and hold switch until Glass Stops In Flush Closed Position.	No Action
	VENT RANGE	Push and Hold Switch Until Glass Passes Through Flush Closed Position. Glass Will Then Express Open	Push and Hold Switch Until Glass Stops in Flush Closed Position.	Push and Hold Switch Until Glass Stops in Full Vent Position.
	FLUSH	1. Press Switch For Less Than.25 Seconds For Express To Comfort Stop. 2. Press Switch For More Than.25 Seconds and Glass will Stop When Switch is Released	Press and Hold Switch Until Glass Stops In The Flush Closed Position or Anywhere In Between.	Press and Hold Switch. Glass Will Travel Through Flush Closed To Full Vent. Glass Will Stop When Switch Is Released.
	Comfort Stop	Press Switch For Less Than.25 Seconds For Express to Full Open.	Press And Hold Switch Until Glass Stops In The Flush Closed Position Or Anyhwere In Between.	Press and hold switch. Glass will travel through flush closed to full vent. Glass will stop when switch is released.
	FULL OPEN	No Action	Press and Hold Switch Until Glass Stops in Flush Closed Position.	Press and Hold Switch. Glass Will Travel Through Flush Closed to Full Vent. Glass Will Stop When Switch is Released.

DIAGNOSIS AND TESTING

DIAGNOSTIC PROCEDURES

Before beginning sunroof diagnostics verify that all other power accessories are in proper operating condition. Refer to Sunroof Diagnostic Chart for possible causes. If not, a common electrical problem may exist. Refer to Wiring Diagrams, in this publication for circuit, splice and component descriptions. Check the condition of the circuit protection (20 amp circuit breaker in cavity 19 of the Junction Block). Inspect all wiring connector pins for proper engagement and continuity. Check for battery voltage at the power sunroof controller, refer to Wiring Diagrams, for circuit information. If battery voltage of more than 10 volts is detected at the controller, proceed with the following tests (the controller will not operate at less than 10 volts).

Before beginning diagnosis for wind noise or water leaks, verify that the problem was not caused by releasing the control switch before the sunroof was fully closed. The sunroof module has a water-management system. If however, the sunroof glass is in a partial closed position, high pressure water may be forced beyond the water management system boundaries and onto the headlining.

DIAGNOSIS AND TESTING (Continued)

SUNROOF DIAGNOSIS CHART

SYMPTOM	POSSIBLE CAUSE
Sunroof motor inoperative.	Faulty control switch. Faulty circuit ground between sunroof electronics module, control switch, and body harness. Faulty power circuit between sunroof electronics module, control switch, and body harness. Faulty sunroof drive motor. Faulty sunroof electronics module. Faulty sunroof drive motor or electronics module.
Audible whine when switch is depressed, sunroof does not operate.	Faulty sunroof drive motor. Binding cable.
Audible clicking or ratcheting when switch is pressed, sunroof does not operate.	Broken or worn drive cable. Worn drive motor gear. Mechanisms not synchronized.
Sunroof vents and opens, but does not close.	Binding cable. Faulty circuit. Faulty control switch. Faulty sunroof electronic module. Faulty drive motor.
Sunroof vents, but does not open.	Binding cable or mechanism. Faulty circuit. Faulty switch. Faulty sunroof electronic module.
Sunroof does not vent	Binding cable or mechanism. Faulty circuit. Faulty control switch. Faulty sunroof electronic module.
Sunroof water leak.	Drain tubes clogged or kinked or disconnected from the sunroof. Glass panel improperly adjusted. Faulty glass panel seal.
Gurgling sound from sunroof	Low spot in drain hose routing, allowing water to stand.
Wind noise from sunroof.	Front of glass panel too high or rear too low. Wind deflector not deploying. Glass not centered in opening. Faulty glass panel seal.
Rattles from open sunroof while driving	Loose or broken attaching hardware. Worn or broken mechanism.

DIAGNOSIS AND TESTING (Continued)

WATER DRAINAGE AND WIND NOISE DIAGNOSIS

The sliding glass panel is designed to seal water entry with a snug fit between the roof and the seal. The fit can be checked by inserting a piece of paper between the roof and the seal. The piece of paper should have some resistance when pulled out when the glass panel is in the closed position. The sunroof housing will drain off a minimum amount of water. Excessive wind noise could result if the gap clearances are exceeded. The sunroof glass panel may need to be adjusted. Refer to Sunroof Glass Panel Adjustment for proper procedures.

Adequate drainage is provided by a drain trough in the sunroof housing which encircles the sliding glass panel and leads to drain hoses. If a wet headliner or other water leak complaints are encountered, before performing any adjustments, first ensure that the drainage system is not plugged or disconnected. Use a pint container to pour water into the sunroof housing drain trough. If water flow is restricted, use compressed air to blow out any material plugging the drain system. Retest system again.

To further check for a disconnected drain hose:

(1) Remove A-pillar trim, sun visors, and map lamps/mini console.

(2) Remove sunroof opening trim lace. Refer to Sunroof Opening Trim Lace.

(3) Lower headliner as necessary to gain access to sunroof housing drain tubes. Refer to Headlining Removal and Installation for proper procedures.

(4) Repair as necessary.

REMOVAL AND INSTALLATION

SUNROOF MODULE ASSEMBLY

REMOVAL

(1) Move glass panel to the fully closed position.

(2) Disconnect battery negative cable.

(3) Recline both front seats.

(4) Remove sunroof opening trim lace. Refer to Sunroof Opening Trim Lace.

(5) Remove control switch. Refer to Sunroof Control Switch.

(6) Disconnect wire harness.

(7) Remove headliner

(8) Disconnect the drain tubes from sunroof housing.

(9) Loosen fasteners attaching sunroof module assembly.

(10) With the aid of a helper, remove fasteners attaching sunroof module assembly to roof panel (Fig. 1).

INSTALLATION

(1) With the Glass panel in the fully closed position.

(2) Raise rear end of sunroof module assembly and guide into position and start fasteners (Fig. 1).

(3) Tighten the fasteners holding the sunroof module to roof panel. Tighten the fasteners to 11 N·m (97 in. lbs.) torque.

(4) Connect the drain tubes to the sunroof housing.

(5) Connect wire harness.

(6) Set headliner into position.

(7) Connect control switch wire connectors.

(8) Test sunroof operation, adjust as necessary.

(9) Finish installing the headliner.

(10) Install sunroof opening trim lace. Refer to Sunroof Opening Trim Lace.

(11) Connect battery negative cable.

SUNROOF ELECTRONICS MODULE ASSEMBLY

REMOVAL

(1) Remove headliner.

(2) Remove sunroof assembly.

(3) Remove two rail screws at rear of module first.

(4) While supporting module assembly, remove the six module attaching screws.

(5) Remove module assembly from vehicle and place on clean work area.

(6) Remove three motor assembly retaining screws from bottom side of motor, and remove motor assembly.

(7) From top side of module assembly, remove one attaching screw from electronics module.

(8) Disconnect electrical connector from module assembly.

(9) Cut and remove retaining tape to release wire from bundle.

(10) Remove old timing module.

INSTALLATION

(1) Check glass assembly position. Adjust to full closed position. Insert pin into holes in lift arm assembly to check position.

(2) Check electronics module and ensure it's in the full closed position.

(3) Set new electronic module in position on top side of motor mounting bracket engaging drive cables with pinion gear in electronics module.

(4) Install one screw to attach electronics module to motor bracket. Tighten screw to 2.5 to 3.5 N·m (22 to 31 in. lbs.) torque.

(5) Install motor assembly to motor bracket and electronics module with three screws. Tighten screw to 2.5 to 3.5 N·m (22 to 31 in. lbs.) torque.

(6) Connect electrical connector to module assembly wire harness. Secure any loose wires.

REMOVAL AND INSTALLATION (Continued)

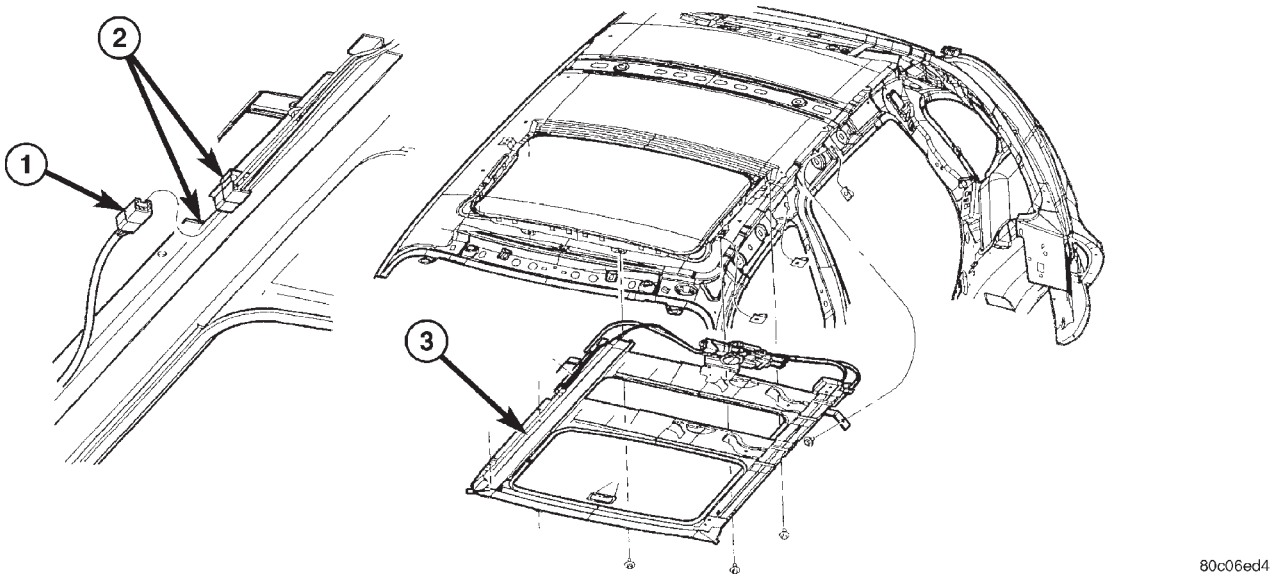

Fig. 1 Sunroof Module Assembly

1 – SUNROOF WIRING CONNECTOR
2 – SIDE RAIL
3 – SUNROOF MODULE

(7) Install sunroof module assembly.
(8) Test sunroof operation, adjust as necessary.
(9) Install headliner.
(10) Install A-pillar trim, sun visors, and map lamps/mini console.
(11) Install sunroof opening trim lace.

SUNROOF DRIVE MOTOR

REMOVAL

(1) Remove headliner.
(2) Cut wire retaining tape being careful not to cut wires.
(3) Disengage wire harness from motor.
(4) Remove three motor assembly attaching screws from bottom side of motor assembly and remove motor assembly from the motor bracket.

INSTALLATION

(1) Place motor into position and install screws attaching motor to bracket.

NOTE: Hold electronics module to motor bracket when inserting motor shaft to avoid disengaging drive cables.

(2) Connect electrical connector.
(3) Tape wires to drive cables to prevent rattles.
(4) Test sunroof operation, adjust as necessary.
(5) Install headliner

SUNROOF GLASS PANEL

REMOVAL

(1) Slide sunshade rearward to the open position.
(2) Move the glass panel to the vent position.
(3) Remove the four glass panel screws.
(4) Lift off glass panel and remove from vehicle.

INSTALLATION

(1) Position glass panel on to mechanism.
(2) Start the four attaching screws.
(3) Close glass.
(4) Center glass in opening by running a business card around the glass.
(5) Adjust front height of glass, just below roof panel.
(6) Tighten front two screws.
(7) Adjust rear height of glass, just above roof panel.
(8) Tighten remaining screws.
(9) Verify sunroof operation and alignment. Check fit and adjust as necessary, refer to Sunroof Glass Panel Adjustment for proper procedures.

SUNROOF SUNSHADE

REMOVAL

(1) Place the sunroof glass panel in the vent position.
(2) Remove screws attaching glass to lift arm of sunroof mechanism.
(3) Remove glass assembly from the sunroof assembly.

REMOVAL AND INSTALLATION (Continued)

(4) Remove two screws from trough assembly.
(5) Remove trough assembly.
(6) Slide sunshade forward disengaging front guide feet through front opening in tracks.
(7) Rotate sunshade to disengage rear guide feet from tracks.

CAUTION: Use care not to crease the sunshade when removing or installing.

INSTALLATION

(1) Place sunshade in to position, rotating rear guide feet into track grooves.
(2) Guide front sunshade feet through front openings in tracks.
(3) Place trough assembly into position on sunroof module.
(4) Install two screws attaching trough to sunroof module.
(5) Place glass into position on mechanism lift arms.
(6) Start the four attaching screws.
(7) Close glass.
(8) Center glass in opening by running a business card around the glass.
(9) Adjust front height of glass, just below roof panel.
(10) Tighten front two screws.
(11) Adjust rear height of glass, just above roof panel.
(12) Tighten remaining screws.
(13) Verify sunroof operation and alignment. Check fit and adjust as necessary, refer to Sunroof Glass Panel Adjustment for proper procedures.

SUNROOF GLASS PANEL SEAL

REMOVAL

(1) Remove sunroof glass panel.
(2) Place glass panel on clean work area with the top side up. Support the glass assembly from underside to avoid bending or otherwise damaging the mounting tabs.
(3) Grasp the seal and pull seal away from the glass panel. The seal is a one piece seal.

INSTALLATION

NOTE: Always position seal seam on center of the passenger side of glass panel.

(1) Place seal into position.
(2) Install seal on glass. Using care working the seal around the glass, being careful not to over stretch the seal while installing.
(3) Start the four attaching screws.
(4) Close glass.
(5) Center glass in opening by running a business card around the glass.
(6) Adjust front height of glass, just below roof panel.
(7) Tighten front two screws.
(8) Adjust rear height of glass, just above roof panel.
(9) Tighten remaining screws.
(10) Verify sunroof operation and alignment. Check fit and adjust as necessary, refer to Sunroof Glass Panel Adjustment for proper procedures.

SUNROOF OPENING TRIM LACE

REMOVAL

(1) Remove lace by starting at the joint center of the opening on driver's side.
(2) Pull one end of the lace away from the headliner until the entire lace is removed.

INSTALLATION

.
(1) Place end of trim lace into position starting at center of the opening on driver's side.
(2) Push lace into position.
(3) Ensure that the corner radii is fully engage.
(4) Once trim lace is attached to sunroof module begin tucking the headline under the lip on the trim lace working all the way around the opening.

SUNROOF HOUSING DRAIN HOSE

FRONT HOSES

REMOVAL

(1) Move glass panel to the fully closed position.
(2) Remove sunroof opening trim lace.
(3) Disconnect the control switch and wire connector.
(4) Remove headliner.
(5) Disconnect the drain hose from the sunroof housing (Fig. 2).
(6) Drain any liquid from hose connection, if necessary.
(7) Attach new drain hose to old hose with tape that is to be replaced.
(8) Work the old hose back and forth to loosen the sealer.
(9) Pull the old hose out through the bottom and the new hose through.

INSTALLATION

(1) Connect the drain hose to the sunroof housing and test drainage.
(2) Set headliner into position.

REMOVAL AND INSTALLATION (Continued)

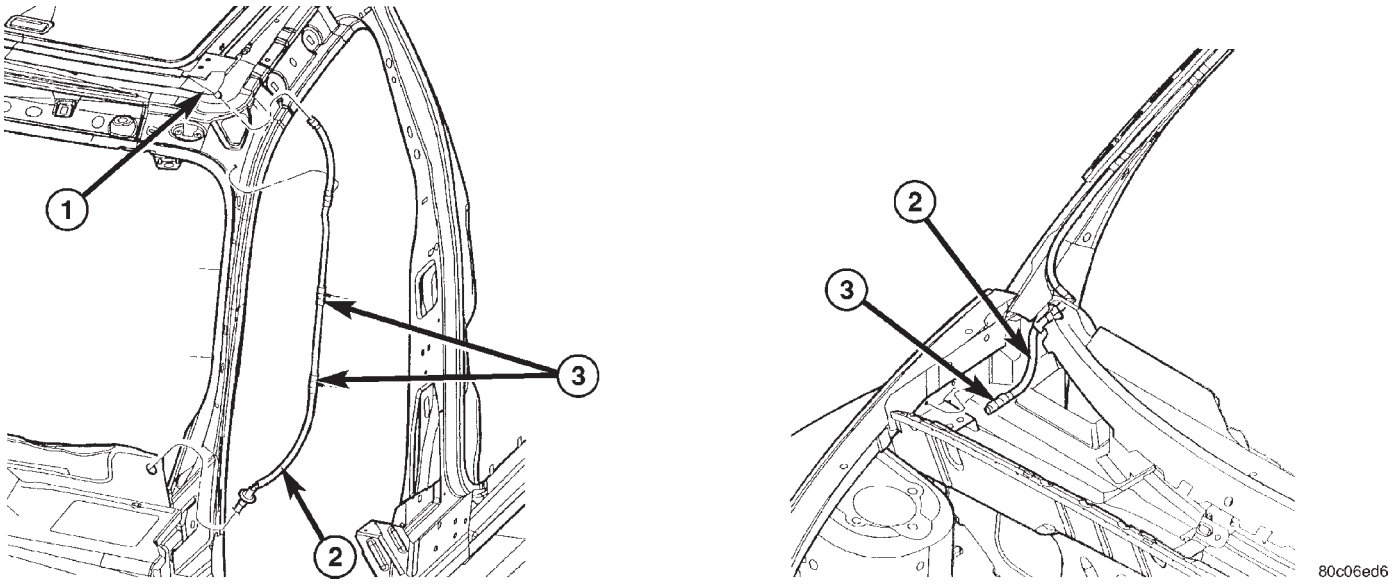

Fig. 2 Front Drain Hose

1 – SUNROOF MODULE
2 – SUNROOF FRONT DRAIN HOSE
3 – CLIPS

(3) Connect express module, drive motor, and control switch wire connectors.
(4) Test sunroof operation, adjust as necessary.
(5) Finish installing headliner. Refer to Headlining Removal and Installation for proper procedures.
(6) Install sunroof opening trim lace. Refer to Sunroof Opening Trim Lace.
(7) Connect the control switch wire connector. Install control switch.

REAR HOUSING HOSE

REMOVAL

(1) Move glass panel to the fully closed position.
(2) Remove sunroof opening trim lace.
(3) Disconnect the control switch and wire connector.
(4) Remove headliner.
(5) Disconnect the drain hose from the sunroof housing (Fig. 3).
(6) Drain any liquid from hose connection, if necessary.
(7) Attach new drain hose to old hose with tape that is to be replaced.
(8) Work the old hose back and forth to loosen the sealer.
(9) Pull the old hose out through the bottom and the new hose through.

INSTALLATION

(1) Connect the drain hose to the sunroof housing and test drainage (Fig. 3).
(2) Set headliner into position.
(3) Connect express module, drive motor, and control switch wire connectors.
(4) Test sunroof operation, adjust as necessary.
(5) Finish installing headliner. Refer to Headlining Removal and Installation for proper procedures.
(6) Install sunroof opening trim lace. Refer to Sunroof Opening Trim Lace.
(7) Connect the control switch wire connector. Install control switch.

SUNROOF CONTROL SWITCH

REMOVAL

(1) Using a flat blade tool, release switch from the headliner.
(2) Disconnect the wire connector from the switch.

INSTALLATION

(1) Connect the wire connector to the control switch.
(2) Install control switch into headliner.
(3) Test sunroof operation.

SUNROOF WIND DEFLECTOR

REMOVAL

(1) Open sunroof glass panel.
(2) Remove screws attaching wind deflector straps to front crossmember.
(3) Remove wind deflector. Rotate wind deflector into the vertical position, 90° to the roof.

REMOVAL AND INSTALLATION (Continued)

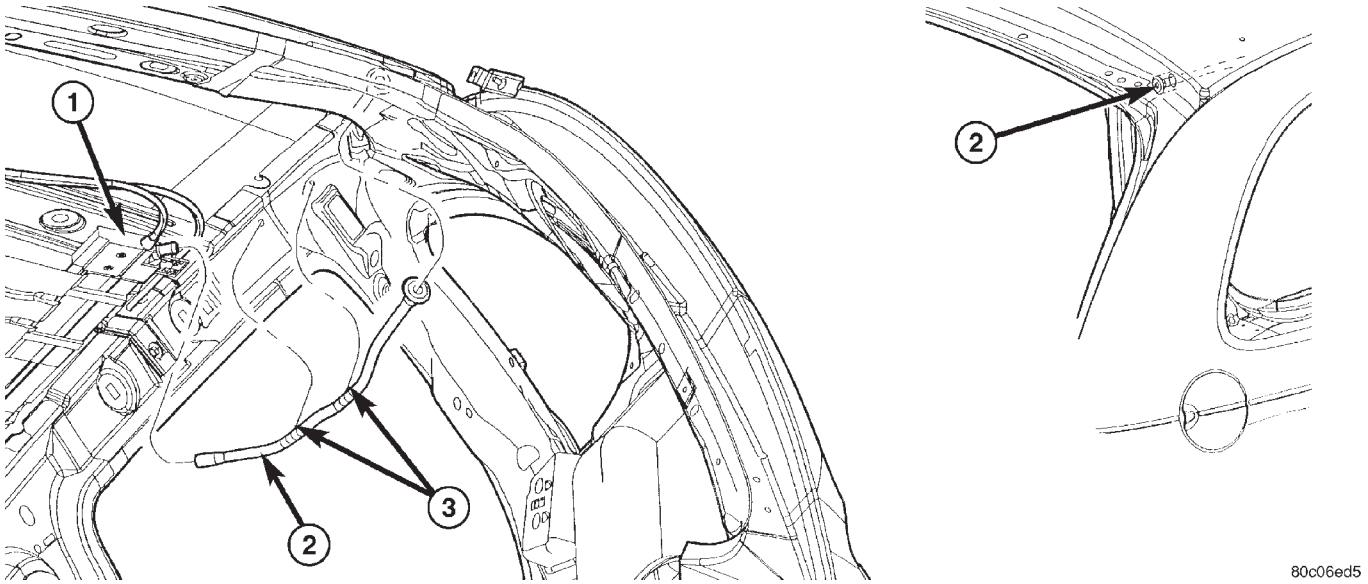

Fig. 3 Rear Drain Hoses

1 – SUNROOF MODULE
2 – SUNROOF REAR DRAIN HOSE
3 – CLIPS

(4) Push deflector arms down and rearward to disengage arms from spring hooks.

INSTALLATION

(1) Place wind deflector in position 90° to roof.

(2) Push arms down and forward to engage spring hooks.

(3) Rotate wind deflector forward into correct position. Depress wind deflector down onto front crossmember to check spring function.

(4) Install fasteners attaching wind deflector straps to front crossmember.

(5) Test sunroof operation.

ADJUSTMENTS

SUNROOF GLASS PANEL ADJUSTMENT

(1) Move the sunshade rearward to the open position.

(2) Move the sunroof glass panel to the fully closed position.

(3) Loosen the forward screws on each side enough to make the front adjustment.

(4) Adjust the front of the sunroof glass panel 1 mm (1/32 inch) below the top surface of the roof panel.

(5) Tighten the front two screws.

(6) Loosen the rear screws on each side enough to make the rear adjustment.

(7) Adjust the rear of the sunroof glass panel 1 mm (1/32 inch) above the top surface of the roof panel.

(8) Tighten the rear two screws.

(9) Check for proper fit. If not OK, repeat glass panel adjustment. If OK, tighten the center two screws.

BODY COMPONENTS

TABLE OF CONTENTS

page

DESCRIPTION AND OPERATION
BODY COMPONENTS 22
GRILLE 22
HOOD 22
FRONT DOOR 23
SPLASH SHIELD 26
DIAGNOSIS AND TESTING
WATER LEAKS 27
WIND NOISE 28
SERVICE PROCEDURES
HEAT STAKING 28
PLASTIC BODY PANEL REPAIR. 28
REMOVAL AND INSTALLATION
GRILLE 33
HOOD LATCH 33
HOOD LATCH STRIKER. 34
HOOD RELEASE CABLE 34
HOOD 35
HOOD SILENCER 35
HOOD HINGE 36
UPPER RADIATOR CLOSURE PANEL 36
FRONT WHEELHOUSE SPLASH SHIELD 36
FRONT SIDE RAIL ACCESS PULLEY SPLASH SHIELD. 37
FENDER 38
EXTERIOR BADGEING ATTACHED WITH DOUBLE SIDED FOAM TAPE 38
EXTERIOR BADGEING/TAPE STRIPES ATTACHED WITH ADHESIVES 38
FRONT DOOR TRIM 39
FRONT DOOR WATER DAM 39
DOOR OUTER BELT WEATHERSTRIP. 40
FRONT/REAR DOOR INNER BELT WEATHERSTRIP. 40
FRONT DOOR GLASS RUN WEATHERSTRIP . . . 42
FRONT DOOR OUTSIDE HANDLE. 42
DOOR LOCK CYLINDER 42
FRONT DOOR LATCH 43
FRONT DOOR LATCH STRIKER 43
FRONT VERTICAL GUIDE BAR 43
FRONT DOOR GLASS 44
FRONT DOOR WINDOW REGULATOR 44
FRONT DOOR CHECK STRAP 44
FRONT DOOR 45
FRONT DOOR HINGE 45
FRONT/REAR DOOR OPENING WEATHERSTRIP. 46
FRONT/REAR DOOR UPPER SECONDARY WEATHERSTRIP. 46

page

SIDE VIEW MIRROR 47
SIDE VIEW MIRROR TRIM BEZEL. 47
SILL SECONDARY WEATHERSTRIP 48
REAR DOOR TRIM 48
REAR DOOR WATER DAM 49
REAR DOOR OUTSIDE HANDLE. 50
REAR DOOR LATCH 50
REAR DOOR LATCH STRIKER 51
REAR DOOR GLASS 51
REAR DOOR WINDOW REGULATOR 52
REAR DOOR GLASS RUN WEATHERSTRIP 52
REAR DOOR CHECK STRAP. 53
REAR DOOR 53
REAR DOOR HINGE 53
FUEL FILL DOOR. 54
LIFTGATE 54
LIFTGATE HINGE. 55
LIFTGATE PROP ASSEMBLY 55
LIFTGATE LATCH 55
LIFTGATE LATCH STRIKER. 56
LIFTGATE LOCK CYLINDER 57
LIFTGATE WEATHERSTRIP. 57
LIFTGATE CHMSL ACCESS PANEL 57
LIFTGATE CONTROL ASSEMBLY INNER PANEL . . 57
LIFTGATE OUTSIDE HANDLE 58
A-PILLAR TRIM 59
DOOR SILL TRIM. 59
SIDE COWL TRIM 60
B-PILLAR TRIM 60
UPPER C-PILLAR TRIM PANEL 60
UPPER D-PILLAR TRIM PANEL 61
LOWER QUARTER TRIM PANEL 61
FLOOR CONSOLE. 61
FRONT SEAT BELT BUCKLE 62
FRONT SEAT BELT RETRACTOR 62
FRONT SHOULDER BELT ADJUSTER 62
REAR SEAT BELT BUCKLE 63
REAR SEAT BELT RETRACTOR 63
CHILD TETHER ANCHOR BEZEL. 63
CARPET 63
SUN VISOR 64
HEADLINER. 64
INSIDE REAR VIEW MIRROR 65
BODY VENT. 65
ADJUSTMENTS
FRONT DOOR LATCH ADJUSTMENT 66
REAR DOOR LATCH ADJUSTMENT 66
SPECIAL TOOLS
BODY 66

DESCRIPTION AND OPERATION

BODY COMPONENTS

DESCRIPTION

Exterior sheet metal components make up the exterior of the vehicle. Some exterior metal systems are welded assemblies, such as doors and hoods. Some exterior trim items are made of composite.

The exterior sheet metal is repairable and adjustable for fit and finish. Welded and bonded component systems are adjustable as a system. Trim components made of composite are stamped with the type of material used.

OPERATION

The exterior is finished with various metal stamping and composite moldings. These assemblies give the vehicle a finished appearance and protect the occupants from the elements. Some components are part of the energy absorbing system used to protect the occupants in collisions. DaimlerChrysler uses various fasteners to retain trim items. At times, it is not possible to remove trim items without damaging the fastener. If it is not possible to remove an item without damaging a component, cut the fastener and use replacement fastener when installing the component.

GRILLE

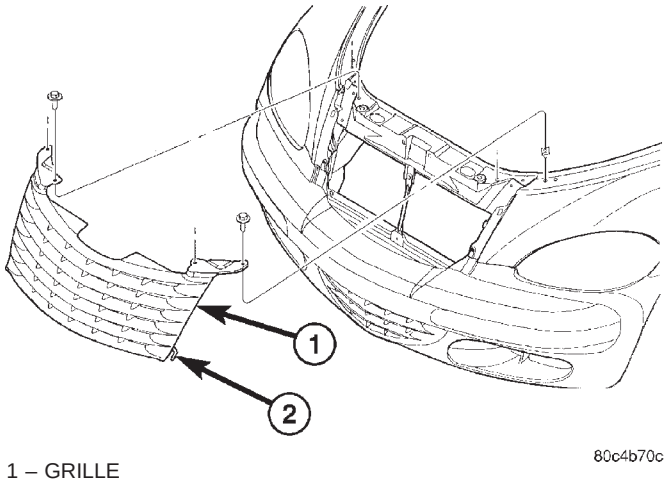

1 – GRILLE
2 – RETAINER

HOOD

HOOD HARDWARE

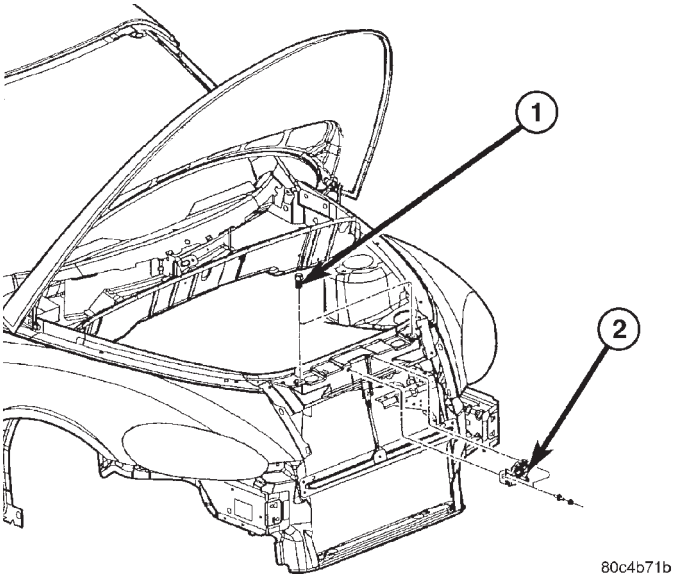

1 – HOOD ADJUSTER BUMPER
2 – HOOD LATCH

HOOD PROP ROD

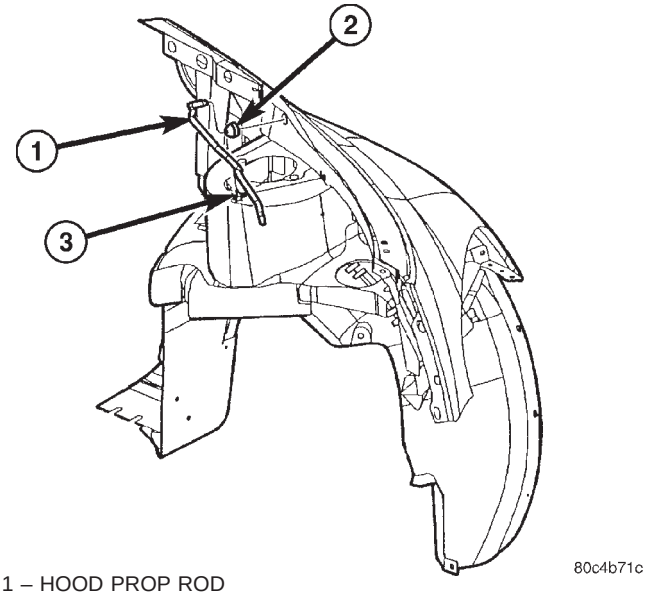

1 – HOOD PROP ROD
2 – PROP ROD GROMMET
3 – PROP ROD RETAINER

DESCRIPTION AND OPERATION (Continued)

HOOD SILENCER

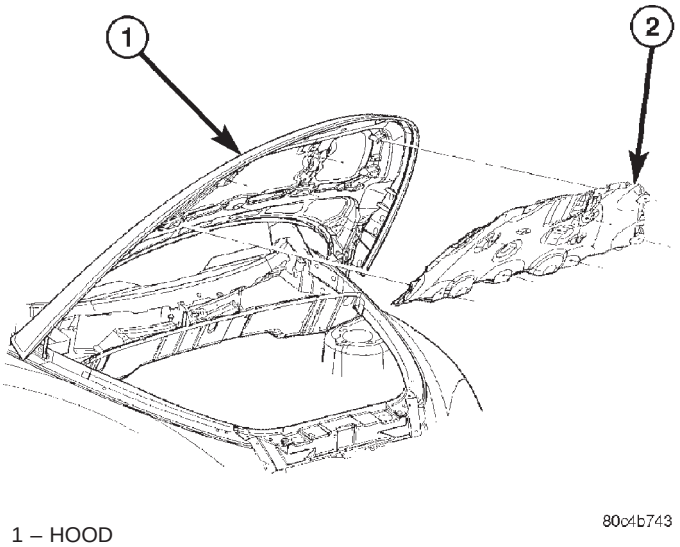

1 – HOOD
2 – HOOD INNER PANEL SILENCER

HOOD STRIKER

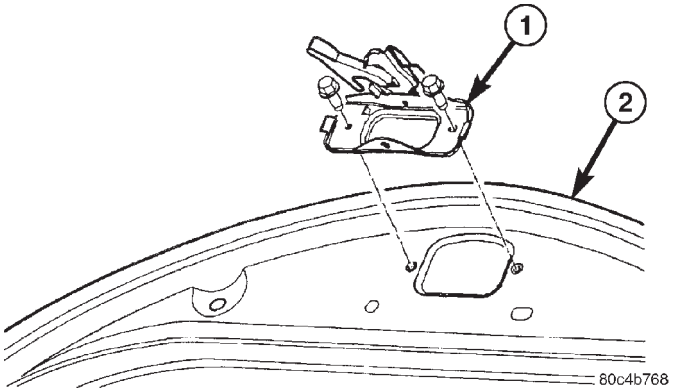

1 – HOOD STRIKER
2 – HOOD

HOOD HINGE

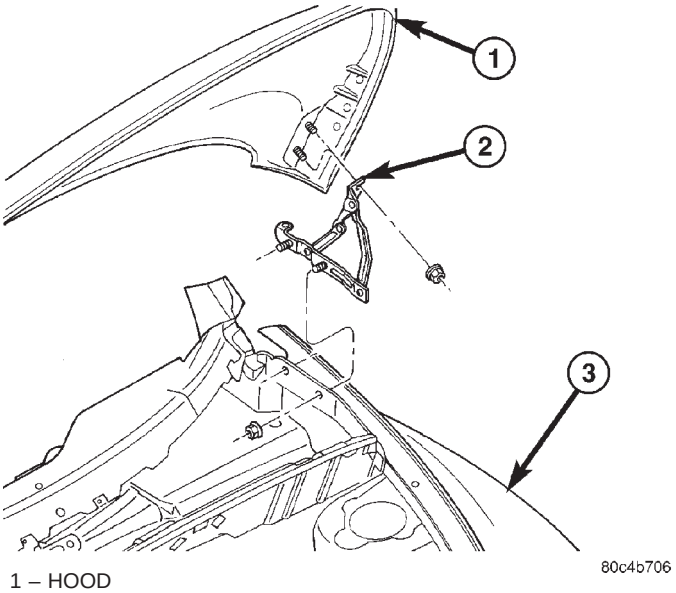

1 – HOOD
2 – HOOD HINGE
3 – FRONT FENDER

FRONT DOOR

FRONT DOOR HINGE

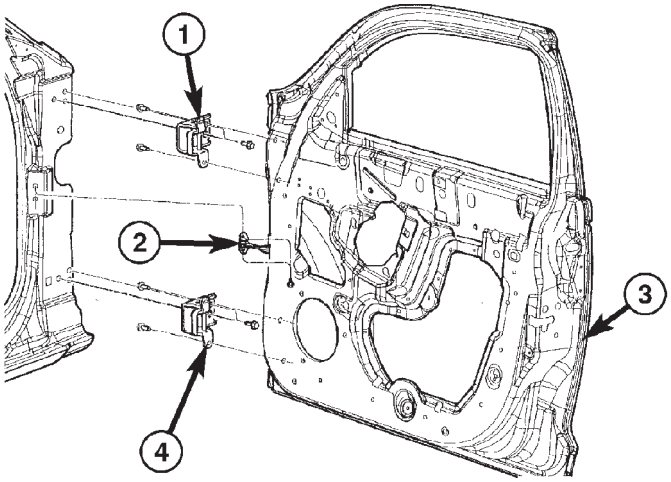

1 – FRONT DOOR UPPER HINGE
2 – FRONT DOOR CHECK STRAP
3 – FRONT DOOR
4 – FRONT DOOR LOWER HINGE

DESCRIPTION AND OPERATION (Continued)

FRONT DOOR LATCH AND OUTER HANDLE

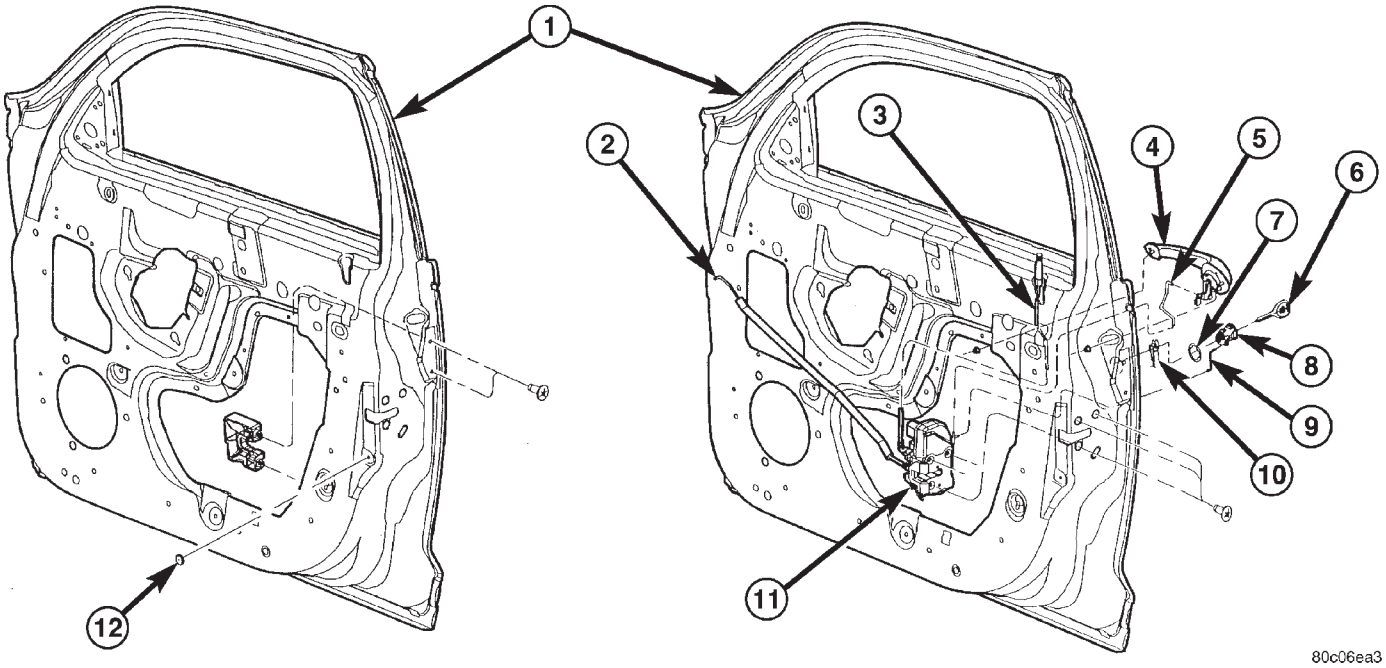

1 – FRONT DOOR
2 - FRONT DOOR INSIDE REMOTE HANDLE TO LATCH LINK & SLEEVE
3 – FRONT DOOR LOCK KNOB LINK TO LATCH
4 – FRONT DOOR OUTSIDE HANDLE
5 – FRONT DOOR OUTSIDE HANDLE TO LATCH LINK
6 – KEY
7 – KEY CYLINDER GASKET
8 – KEY CYLINDER
9 – FRONT DOOR KEY CYLINDER TO LATCH LINK
10 – CENTRAL LOCKING SWITCH
11 – FRONT DOOR OVERRIDE LOCKS LATCH
12 – FRONT DOOR AJAR SWITCH BUMPER

DESCRIPTION AND OPERATION (Continued)

FRONT DOOR OVERRIDE POWER/MANUAL LATCH

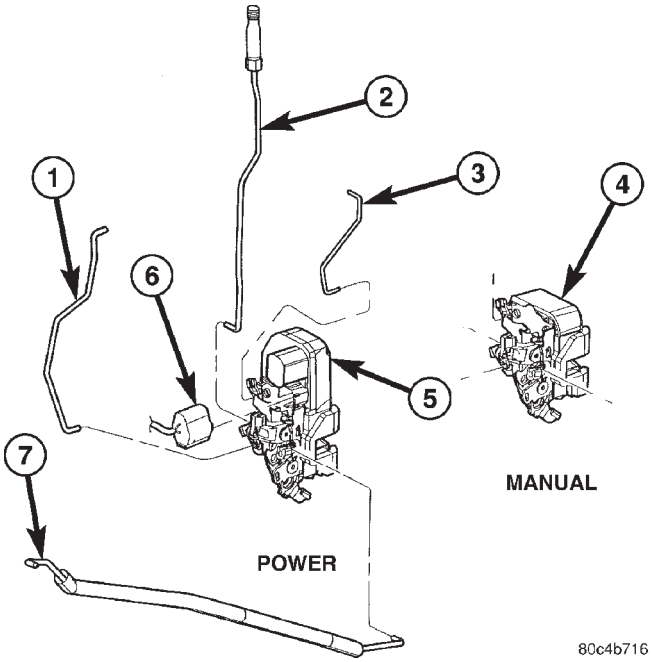

1 – FRONT DOOR OUTSIDE HANDLE TO LATCH LINK
2 – FRONT DOOR LOCK KNOB TO LATCH LINK
3 – FRONT DOOR KEY CYLINDER TO LATCH LINK
4 – FRONT DOOR OVERRIDE MANUAL LOCK LATCH
5 – FRONT DOOR OVERRIDE POWER LOCK LATCH
6 – FRONT DOOR OVERRIDE POWER LOCK LATCH CONNECTION
7 – FRONT DOOR INSIDE REMOTE HANDLE LINK AND SLEEVE TO LATCH

FRONT DOOR POWER WINDOW REGULATOR

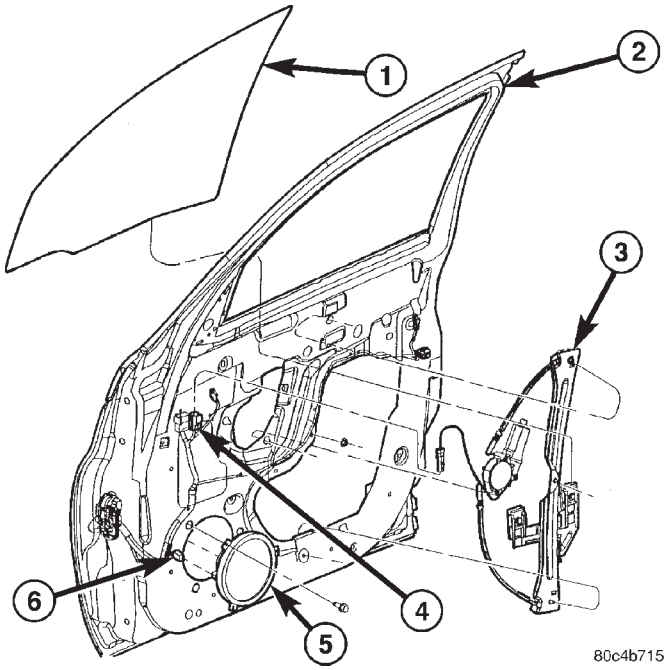

1 – FRONT DOOR WINDOW GLASS
2 – FRONT DOOR
3 – FRONT DOOR WINDOW POWER REGULATOR
4 – POWER WINDOW REGULATOR WIRING CONNECTOR
5 – FRONT DOOR SPEAKER
6 – SPEAKER WIRE CONNECTOR

DESCRIPTION AND OPERATION (Continued)

SPLASH SHIELD

FRONT FENDER SPLASH SHIELD

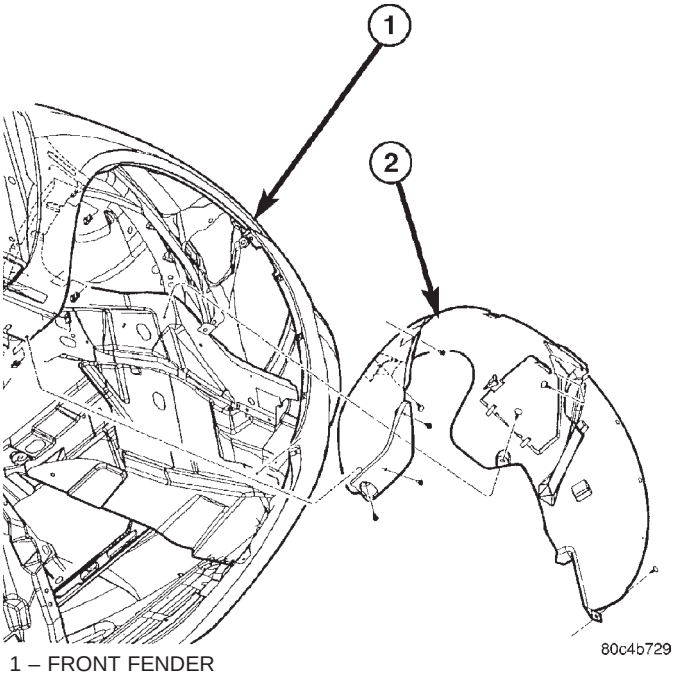

1 – FRONT FENDER
2 – FRONT FENDER SPLASH SHIELD

FRONT SIDE RAIL ACCESS PULLEY SPLASH SHIELD

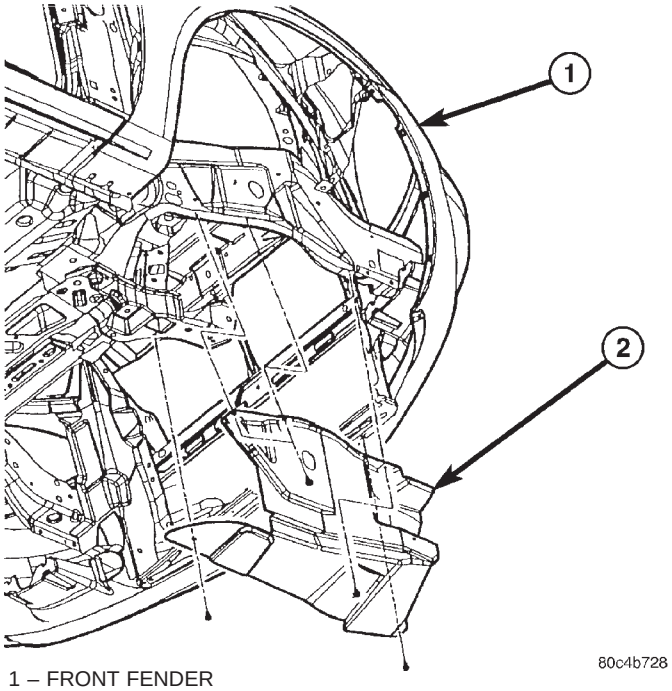

1 – FRONT FENDER
2 – FRONT SIDE RAIL ACCESS PULLEY SPLASH SHIELD

REAR WHEEL HOUSING SPLASH SHIELD – LEFT

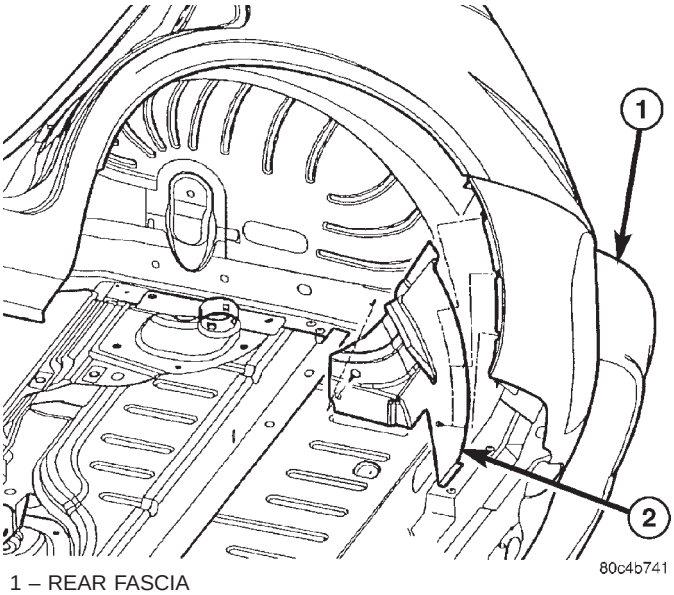

1 – REAR FASCIA
2 – REAR WHEEL HOUSING SPLASH SHIELD - LEFT SIDE

REAR WHEEL HOUSING SPLASH SHIELD – RIGHT

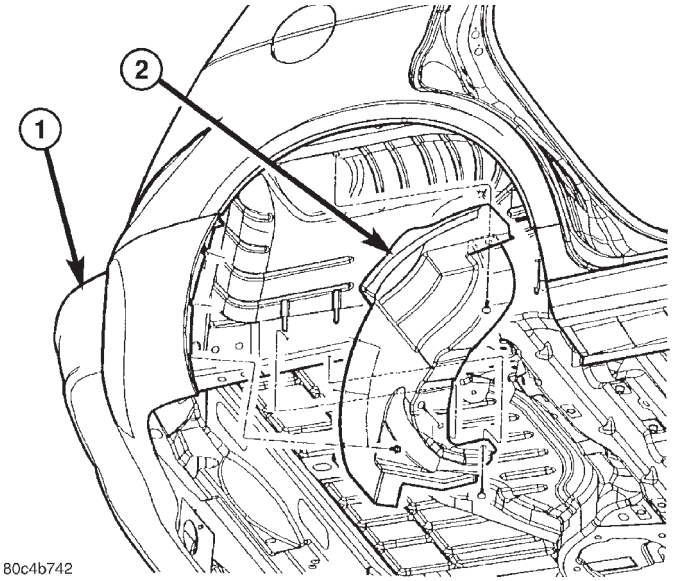

1 – REAR FASCIA
2 – REAR WHEEL HOUSING SPLASH SHIELD - RIGHT SIDE

DIAGNOSIS AND TESTING

WATER LEAKS

Water leaks can be caused by poor sealing, improper body component alignment, body seam porosity, missing plugs, or blocked drain holes. Centrifugal and gravitational force can cause water to drip from a location away from the actual leak point, making leak detection difficult. All body sealing points should be water tight in normal wet-driving conditions. Water flowing downward from the front of the vehicle should not enter the passenger or luggage compartment. Moving sealing surfaces will not always seal water tight under all conditions. At times, side glass or door seals will allow water to enter the passenger compartment during high pressure washing or hard driving rain (severe) conditions. Overcompensating on door or glass adjustments to stop a water leak that occurs under severe conditions can cause premature seal wear and excessive closing or latching effort. After completing a repair, water-test vehicle to verify leak has stopped before returning vehicle to use.

VISUAL INSPECTION BEFORE WATER LEAK TESTS

Verify that floor and body plugs are in place, body drains are clear, and body components are properly aligned and sealed. If component alignment or sealing is necessary, refer to the appropriate section for proper procedures.

WATER LEAK TESTS

WARNING: DO NOT USE ELECTRIC SHOP LIGHTS OR TOOLS IN WATER TEST AREA. PERSONAL INJURY CAN RESULT.

When the conditions causing a water leak have been determined, simulate the conditions as closely as possible.

- If a leak occurs with the vehicle parked in a steady light rain, flood the leak area with an open-ended garden hose.
- If a leak occurs while driving at highway speeds in a steady rain, test the leak area with a reasonable velocity stream or fan spray of water. Direct the spray in a direction comparable to actual conditions.
- If a leak occurs when the vehicle is parked on an incline, hoist the end or side of the vehicle to simulate this condition. This method can be used when the leak occurs when the vehicle accelerates, stops or turns. If the leak occurs on acceleration, hoist the front of the vehicle. If the leak occurs when braking, hoist the back of the vehicle. If the leak occurs on left turns, hoist the left side of the vehicle. If the leak occurs on right turns, hoist the right side of the vehicle. For hoisting recommendations refer to Lubrication and Maintenance.

WATER LEAK DETECTION

To detect a water leak point-of-entry, do a water test and watch for water tracks or droplets forming on the inside of the vehicle. If necessary, remove interior trim covers or panels to gain visual access to the leak area. If the hose cannot be positioned without being held, have someone help do the water test.

Some water leaks must be tested for a considerable length of time to become apparent. When a leak appears, find the lowest point of the water track or drop. After leak point has been found, repair the leak and water test to verify that the leak has stopped.

Locating the entry point of water that is leaking into a cavity between panels can be difficult. The trapped water may splash or run from the cavity, often at a distance from the entry point. Most water leaks of this type become apparent after accelerating, stopping, turning, or when on an incline.

MIRROR INSPECTION METHOD

When a leak point area is visually obstructed, use a suitable mirror to gain visual access. A mirror can also be used to deflect light to a limited-access area to assist in locating a leak point.

BRIGHT LIGHT LEAK TEST METHOD

Some water leaks in the luggage compartment can be detected without water testing. Position the vehicle in a brightly lit area. From inside the darkened luggage compartment inspect around seals and body seams. If necessary, have a helper direct a drop light over the suspected leak areas around the luggage compartment. If light is visible through a normally sealed location, water could enter through the opening.

PRESSURIZED LEAK TEST METHOD

When a water leak into the passenger compartment cannot be detected by water testing, pressurize the passenger compartment and soap test exterior of the vehicle. To pressurize the passenger compartment, close all doors and windows, start engine, and set heater control to high blower in HEAT position. If engine can not be started, connect a charger to the battery to ensure adequate voltage to the blower. With interior pressurized, apply dish detergent solution to suspected leak area on the exterior of the vehicle. Apply detergent solution with spray device or soft bristle brush. If soap bubbles occur at a body seam, joint, seal or gasket, the leak entry point could be at that location.

DIAGNOSIS AND TESTING (Continued)

WIND NOISE

Wind noise is the result of most air leaks. Air leaks can be caused by poor sealing, improper body component alignment, body seam porosity, or missing plugs in the engine compartment or door hinge pillar areas. All body sealing points should be airtight in normal driving conditions. Moving sealing surfaces will not always seal airtight under all conditions. At times, side glass or door seals will allow wind noise to be noticed in the passenger compartment during high cross winds. Over compensating on door or glass adjustments to stop wind noise that occurs under severe conditions can cause premature seal wear and excessive closing or latching effort. After a repair procedure has been performed, test vehicle to verify noise has stopped before returning vehicle to use.

Wind noise can also be caused by improperly fitted exterior moldings or body ornamentation. Loose moldings can flutter, creating a buzzing or chattering noise. An open cavity or protruding edge can create a whistling or howling noise. Inspect the exterior of the vehicle to verify that these conditions do not exist.

VISUAL INSPECTION BEFORE TESTS

Verify that floor and body plugs are in place and body components are aligned and sealed. If component alignment or sealing is necessary, refer to the appropriate section of this group for proper procedures.

ROAD TESTING WIND NOISE

(1) Drive the vehicle to verify the general location of the wind noise.

(2) Apply 50 mm (2 in.) masking tape in 150 mm (6 in.) lengths along weatherstrips, weld seams or moldings. After each length is applied, drive the vehicle. If noise goes away after a piece of tape is applied, remove tape, locate, and repair defect.

POSSIBLE CAUSE OF WIND NOISE

- Moldings standing away from body surface can catch wind and whistle.
- Gaps in sealed areas behind overhanging body flanges can cause wind-rushing sounds.
- Misaligned movable components.
- Missing or improperly installed plugs in pillars.
- Weld burn through holes.

SERVICE PROCEDURES

HEAT STAKING

(1) Remove trim panel.

(2) Bend or move the trim panel components at the heat staked joints. Observe the heat staked locations and/or component seams for looseness.

(3) Heat stake the components.

(a) If the heat staked or component seam location is loose, hold the two components tightly together and using a soldering gun with a flat tip, melt the material securing the components together. Do not over heat the affected area, damage to the exterior of the trim panel may occur.

(b) If the heat staked material is broken or missing, use a hot glue gun to apply new material to the area to be repaired. The panels that are being heat staked must be held together while the applying the glue. Once the new material is in place, it may be necessary to use a soldering gun to melt the newly applied material. Do not over heat the affected area, damage to the exterior of the trim panel may occur.

(4) Allow the repaired area to cool and verify the repair.

(5) Install trim panel.

PLASTIC BODY PANEL REPAIR

DESCRIPTION

Resin Transfer Molded (RTM) body panels are reinforced with a continuous fiberglass mesh. Epoxy resin is injected into a gel-coated and fiberglass lined mold to form a body panel. Sheet molded compound (SMC) body panels are constructed with fiberglass strands usually 1 inch or shorter, epoxy resin formed into sheet stock and pressed in mold flowing material to form a sheet molded compound (SMC) body panel. RTM and SMC body panels can be repaired with epoxy adhesive after market products. Refer to instructions provided by the manufacturer of products being used to repair RTM or SMC. DaimlerChrysler Corporation recommends that a trained automotive body technician perform body panel repair procedures (Fig. 1).

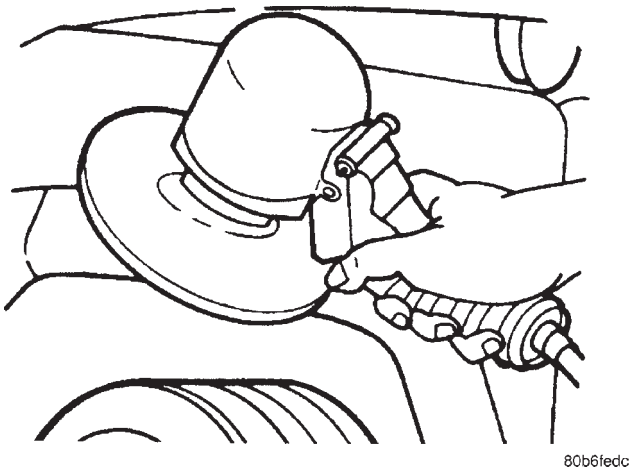

Fig. 1 Panel Repair

SERVICE PROCEDURES (Continued)

SAFETY PRECAUTION AND WARNINGS

WARNING: EYE PROTECTION SHOULD BE USED WHEN SERVICING RTM AND SMC COMPONENTS. PERSONAL INJURE CAN RESULT.

USE AN OSHA APPROVED BREATHING DEVICE WHEN MIXING EPOXY, GRINDING RTM AND SMC, AND SPRAYING PAINT OR SOLVENTS IN A CONFINED AREA. PERSONAL INJURY CAN RESULT.

AVOID PROLONGED SKIN CONTACT WITH EPOXY RESIN, PETROLEUM, OR ALCOHOL BASED SOLVENTS. PERSONAL INJURY CAN RESULT.

DO NOT VENTURE UNDER A HOISTED VEHICLE THAT IS NOT PROPERLY SUPPORTED ON SAFETY STANDS. PERSONAL INJURY CAN RESULT.

- When holes must be drilled or cut in body panels, verify locations of internal body components and electrical wiring. Damage to vehicle can result.
- Do not use abrasive chemicals or compounds on undamaged painted surfaces around repair areas. Damage to finish can result.

PANEL SECTIONING

If it is required to section a large panel for an SMC or RTM repair, it will be necessary to reinforce the panel with epoxy structural adhesive (rigid repair adhesive) (Fig. 2). To bond two plastic panels together, a reinforcement must overlap both panels. The panels must be “V’d” at a 20 degree angle. The area to be reinforced should be washed, then sanded. Be sure to wipe off any excess soap and water when finished. Lightly sand or abrade the plastic with an abrasive pad or sandpaper. Blow off any dust with compressed air or wipe with a clean dry rag.

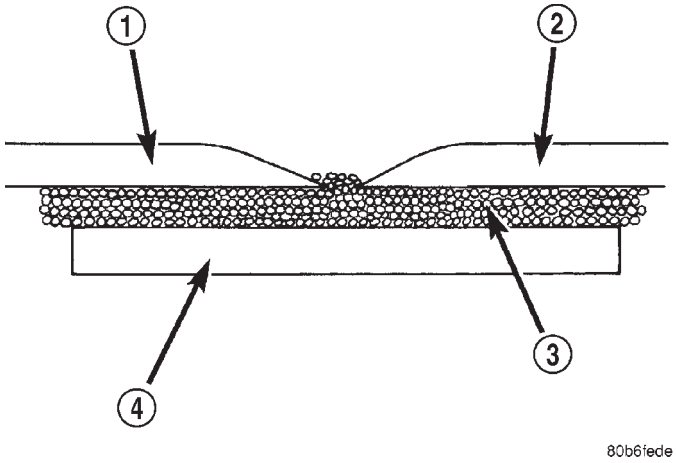

Fig. 2 Panel Sectioning

1 – EXISTING PANEL
2 – NEW PANEL
3 – PANEL ADHESIVE
4 – BONDING STRIP

When bonding SMC or RTM panels, use a two-part epoxy adhesive. Properly mix parts A and B, and apply it to the panels being repaired. Be sure that enough adhesive has been applied to allow squeeze out and to fill the full bond line. Once the pieces have been brought together, do not move them until the adhesive is cured. The assembly can be held together with clamps, rivets, etc. A faster cure can be obtained by heating with a heat lamp or heat gun.

After the parts have been bonded and have had time to cure, rough sand the seam and apply the final adhesive filler to the area being repaired. Smooth the filler with a spatula, wooden tongue depressor, or squeegee. For fine texturing, a small amount of water can be applied to the filler surface while smoothing. The cured filler can be sanded as necessary and, as a final step, cleanup can be done withy soapy water. Wipe the surface clean with a dry cloth allowing time for the panel to dry before moving on with the repair.

PANEL REINFORCEMENT

Structural repair procedures for rigid panels such as Sheet Molded compound (SMC) or Resin Transfer Molded (RTM) with large cracks and holes will require a reinforcement backing. Reinforcements can be made with several applications of glass cloth saturated with epoxy structural adhesive, semirigid or flexible repair materials should be used for semirigid or flexible part repairs (Fig. 3) and (Fig. 4). Open meshed fiberglass dry wall tape can be used to form a reinforcement. The dry wall tape allows the resin to penetrate through and make a good bond between the panel and the epoxy adhesive. Structurally, the more dry wall tape used, the stronger the repair.

Another kind of repair that can be done to repair large cracks and holes is to use a scrap piece of similar plastic and bond with structural adhesive. The reinforcement should cover the entire break and should have a generous amount of overlap on either side of the cracked or broken area.

When repairing plastic, the damaged area is first “V’d” out, or beveled. Large bonding areas are desirable when repairing plastic because small repairs are less likely to hold permanently. Beveling the area around a crack at a 20 degree angle will increase the bonding surface for a repair (Fig. 5). It is recommended that sharp edges be avoided because the joint may show through after the panel is refinished.

- Panel repair for both flexible and rigid panels are basically the same. The primary difference between flexible panel repair and rigid panel repair is in the adhesive materials used (Fig. 6).
- The technician should first decide what needs to be done when working on any type of body panel. One should determine if it is possible to return the

SERVICE PROCEDURES (Continued)

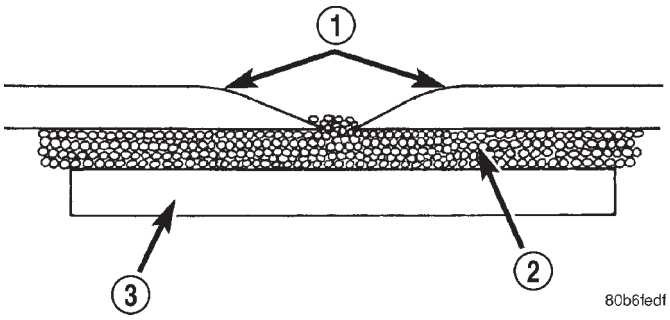

Fig. 3 Softened Edges

1 – SOFTENED EDGES
2 – PANEL ADHESIVE
3 – BONDING STRIP

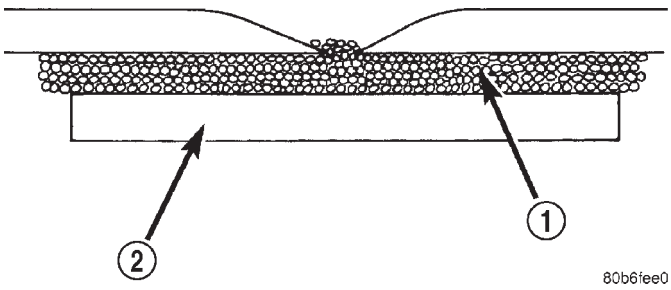

Fig. 4 Panel Reinforcement

1 – PANEL ADHESIVE
2 – REINFORCEMENT

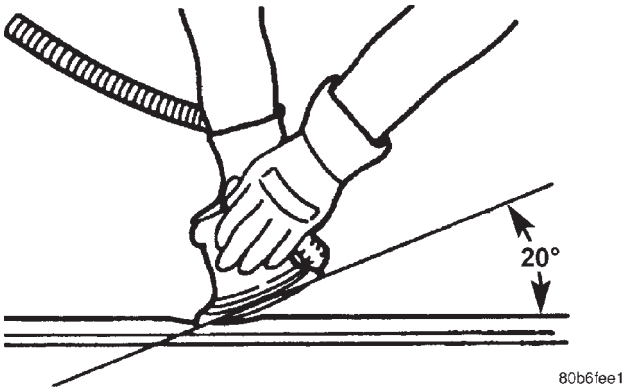

Fig. 5 Beveling Angle – 20 Degree

damage part to its original strength and appearance without exceeding the value of the replacement part.

• When plastic repairs are required, it is recommended that the part be left on the vehicle when every possible. That will save time, and the panel will remain stationary during the repair. Misalignment can cause stress in the repair areas and can result in future failure.

VISUAL INSPECTION

Sheet Molded Compound (SMC) and Resin Transfer Molded (RTM), because they are composites, react

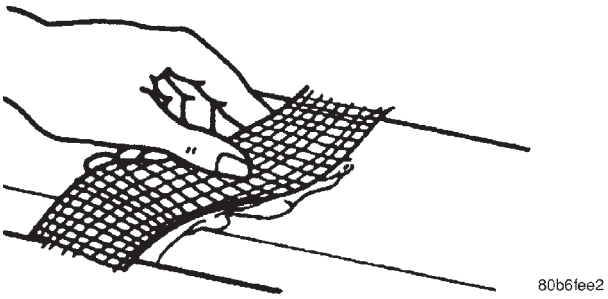

Fig. 6 Fiberglass Tape

differently to impact that sheet metal does. Composite materials can mask the severity of an accident. Adhesive bond lines, interior structure of the doors, and steel structure need to be inspected carefully to get a true damage assessment. Close inspection may require partial removal of interior trim or inner panels.

Identify the type of repair:

Puncture or Crack – Damage that has penetrated completely through the panel. Damage is confined to one general area; a panel section is not required. However, a backer panel, open fiberglass tape, or matted material must be bonded from behind (Fig. 7).

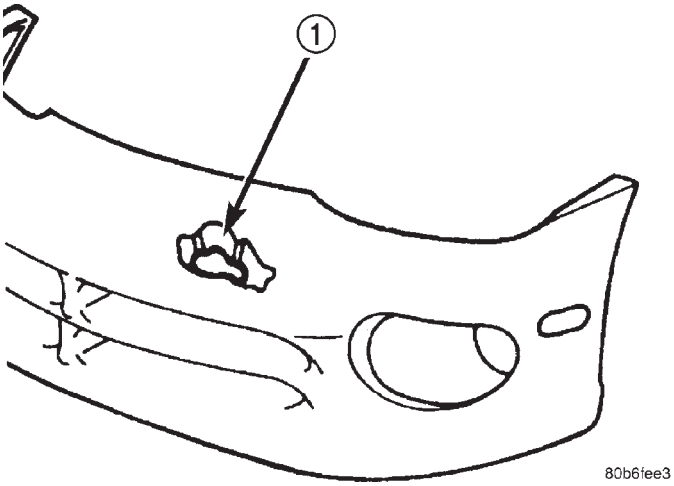

Fig. 7 Damage Component

1 – PUNCTURE

PANEL SURFACE PREPARATION

If a body panel has been punctured, cracked, or crushed, the damaged area must be removed from the panel to achieve a successful repair. All spider web cracks leading away from a damaged area must be stopped or removed. To stop a running crack in a SMC or RTM panel, drill a 6 mm (0.250 in.) hole at the end of the crack farthest away from the damage. If spider web cracks can not be stopped, the panel would require replacement. The surfaces around the damaged area should be stripped of paint and freed

SERVICE PROCEDURES (Continued)

from was and oil. Scuff surfaces around repair area with 360 grit wet/dry sand paper, or equivalent, to assure adhesion of epoxy repair materials.

PATCHING PANELS

An RTM or SMC panel that has extensive puncture type damage can be repaired by cutting out the damaged material (Fig. 8). Use a suitable reciprocating saw or cut off wheel to remove the section of the SMC or RTM panel that is damaged. The piece cut out can be used as a template to shape the new patch. It is not necessary to have access to the back of the panel to install a patch. Bevel edges of cutout at 20 degrees to expose a larger bonding area on the outer side. This will allow for an increased reinforcement areas.

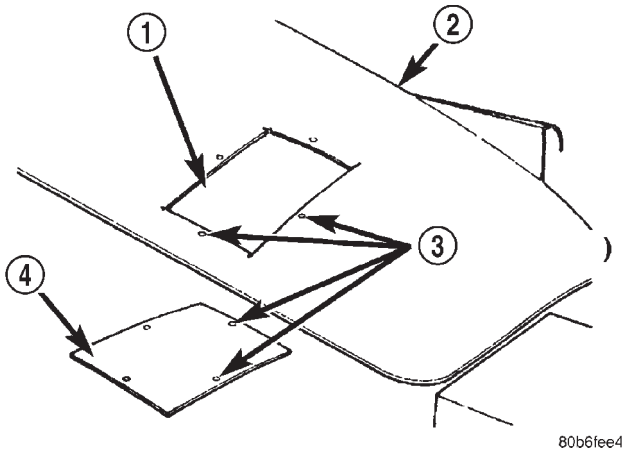

Fig. 8 Damaged Panel Cutout and Patch

1 – CUTOUT
2 – DAMAGED BODY PANEL
3 – 4MM (0.160 IN.) HOLES
4 – PATCH CUT TO SIZE

PANEL PATCH FABRICATIONS

A patch can be fabricated from any rigid fiberglass panel that has comparable contour with the repair area. discard SMC or RTM panels. Lift gates and fenders can be used to supply patch material. If existing material is not available or compatible, a patch can be constructed with epoxy and reinforcement mesh (dry wall tape). Perform the following operation if required:

(1) Cover waxed paper or plastic with adhesive backed nylon mesh (dry wall tape) larger than the patch required (Fig. 9).

(2) Tape waxed paper or plastic sheet with mesh to a surface that has a compatible contour to the repair area.

(3) Apply a liberal coat of epoxy adhesive over the reinforcement mesh (Fig. 9). If necessary apply a second or third coat of epoxy and mesh after firs coat has cured. The thickness of the patch should be the same as the repair area.

(4) After patch has cured, peel waxed paper or plastic from the back of the patch.

(5) If desired, a thin film coat of poesy can be applied to the back of the patch to cover mesh for added strength.

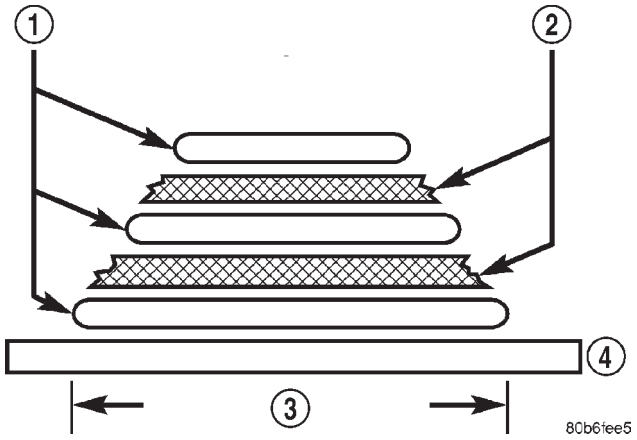

Fig. 9 Fabricated Panel

1 – STRUCTURAL ADHESIVE OR EPOXY RESIN
2 – FIBERGLASS CLOTH OR FIBERGLASS MESH TAPE
3 – WIDTH OF V-GROOVE
4 – WAXED PAPER

PANEL PATCH INSTALLATION

(1) Make a paper or cardboard pattern the size and shape of the cutout hole in the panel.

(2) Trim 3 mm (0.125 in.) from edges of pattern so patch will have a gap between connecting surfaces.

(3) Using the pattern as a guide, cut the patch to size.

(4) Cut scrap pieces of patch material into 50 mm (2 in.) squares to use as patch supports to sustain the patch in the cutout.

(5) Drill 4 mm (0.160 in.) holes 13 mm (0.5 in.) in from edge of cutout hole (Fig. 8).

(6) Drill 3 mm (0.125 in.) holes in the support squares 13 mm (0.5 in.) from the edge in the center of one side.

(7) Scuff the backside of the body panel around the cutout hole with a scuff pad or sandpaper.

(8) Mix enough epoxy to cover one side of all support squares.

(9) Apply epoxy to the support squares on the half with the hole pre-drilled in it.

(10) Using number 8 sheet metal screws, secure support squares to back side of body panel with epoxy sandwiched between the panel and squares (Fig. 10).

(11) Position patch in cutout against support squares and adjust patch until the gap is equal along all sides (Fig. 11).

SERVICE PROCEDURES (Continued)

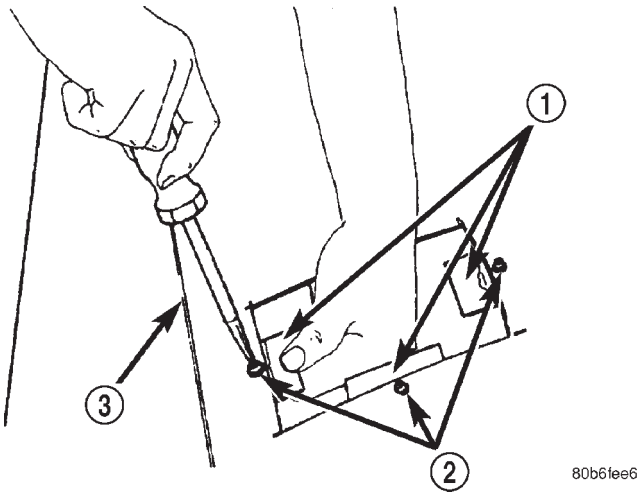

Fig. 10 Secure Support Squares To Body Panel

1 – SUPPORT SQUARES
2 – SCREWS
3 – DAMAGED BODY PANEL

(12) Drill 3 mm (0.125 in.) holes in the support squares through the pre-drilled holes in the patch.

(13) Apply a coat of epoxy to the exposed ends of the support squares (Fig. 12).

(14) Install screws to hold the patch to support squares (Fig. 13). Tighten screws until patch surface is flush with panel surface.

(15) Allow epoxy to cure, and remove all screws.

(16) Using a 125 mm (5 in.) 24 grit disc grinder, grind a 50 mm (2 in.) to 75 mm (3 in.) wide and 2 mm (0.080 in.) deep path across the gaps around the patch (Fig. 14). With compressed air, blow dust from around patch.

(17) Apply adhesive backed nylon mesh (dry wall tape) over gaps around patch (Fig. 15).

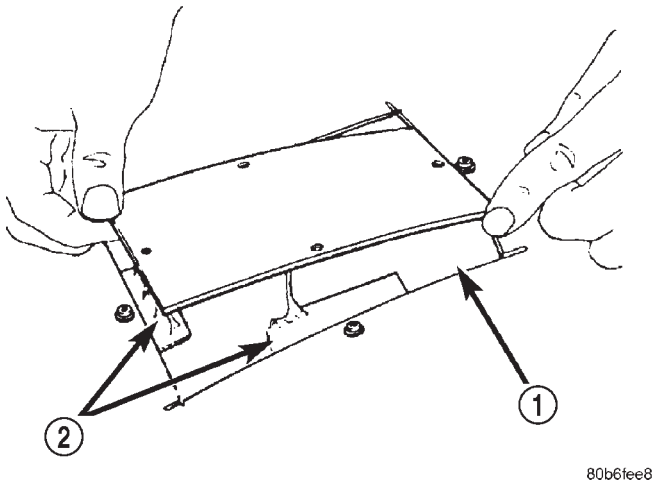

Fig. 11 Position Patch In Cutout And Align

1 – CUTOUT
2 – SUPPORT SQUARES

(18) Mix enough epoxy to cover the entire patch area.

(19) Apply epoxy over the mesh around patch, and smooth epoxy with a wide spreader to reduce finish grinding. Use two to three layers of mesh and epoxy to create a stronger repair (Fig. 16).

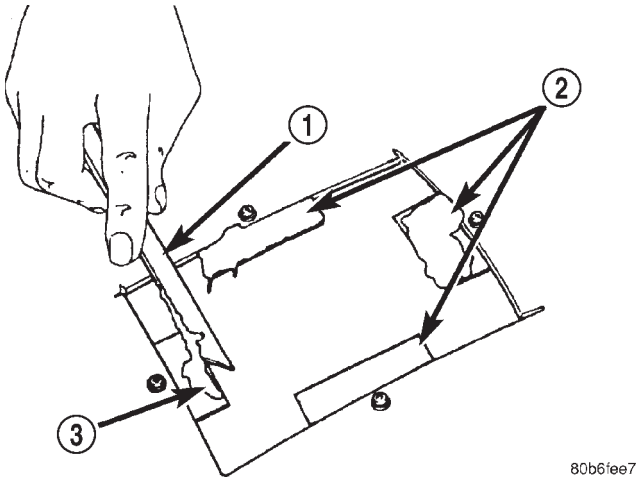

Fig. 12 Apply Epoxy To Support Squares

1 – APPLICATOR
2 – SUPPORT SQUARES
3 – EPOXY

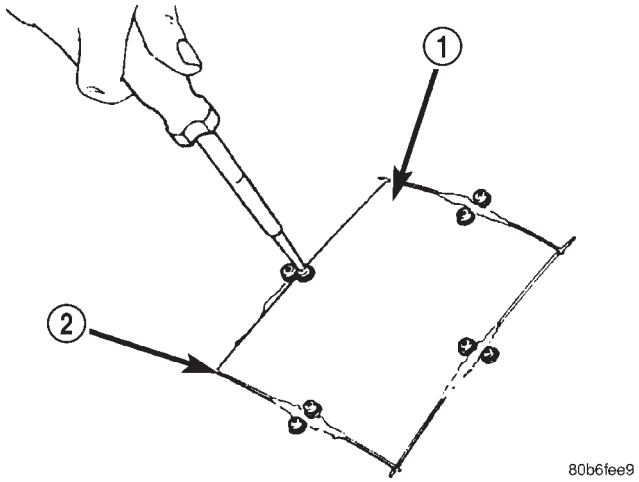

Fig. 13 Install Screws

1 – PATCH
2 – GAP

PATCHED PANEL SURFACING

After patch panel is installed, the patch area can be finished using the same methods as finishing other types of body panels. If mesh material is exposed in the patched area, grind surface down, and apply a coat of high quality rigid plastic body filler. Prime, block sand, and paint as required.

SERVICE PROCEDURES (Continued)

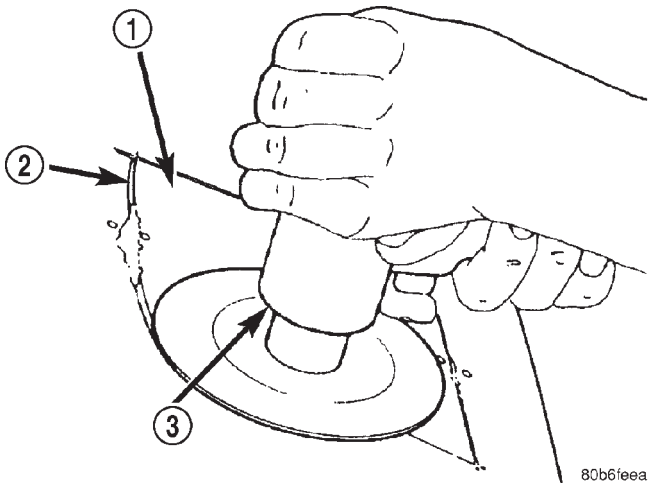

Fig. 14 Grind Surface

1 – PATCH
2 – GAP
3 – DISC GRINDER

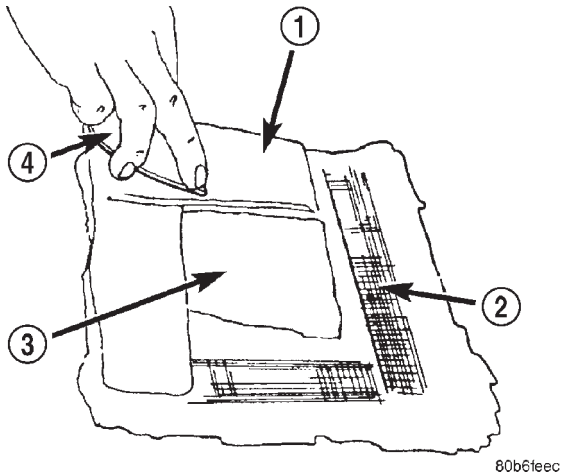

Fig. 16 Cover Mesh With Epoxy

1 – EPOXY
2 – MESH
3 – PATCH
4 – SPREADER

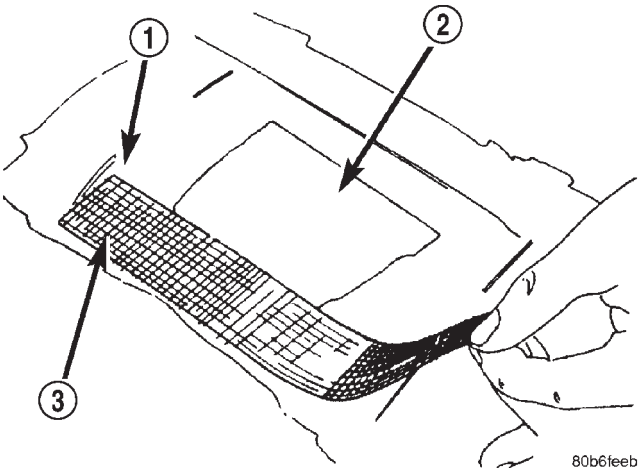

Fig. 15 Cover Gaps With Mesh

1 – GROUND DOWN AREA
2 – PATCH
3 – MESH

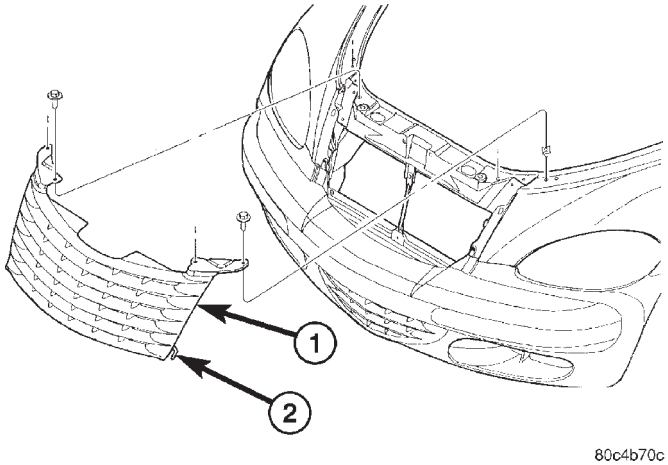

Fig. 17 Grille

1 – GRILLE
2 – RETAINER

REMOVAL AND INSTALLATION

GRILLE

REMOVAL

(1) Open hood and support hood on prop rod.

(2) Remove screws attaching grille to radiator closure panel (Fig. 17).

(3) Pull top of grille down and to disengage hooks from fender.

(4) Remove grille from vehicle.

INSTALLATION

(1) Place grille into position on vehicle, engage lower hook into fascia first, then engage middle hook to fender, then engage top hook. (Fig. 17).

(2) Install screw attaching grille to radiator closure panel.

(3) Close hood.

HOOD LATCH

REMOVAL

(1) Release hood latch and open hood.

(2) Support hood on prop rod.

(3) Remove grille.

REMOVAL AND INSTALLATION (Continued)

(4) Remove screws attaching hood latch to radiator closure panel (Fig. 18).

(5) Remove hood latch from closure panel.

(6) Disengage remote release cable from latch (Fig. 19).

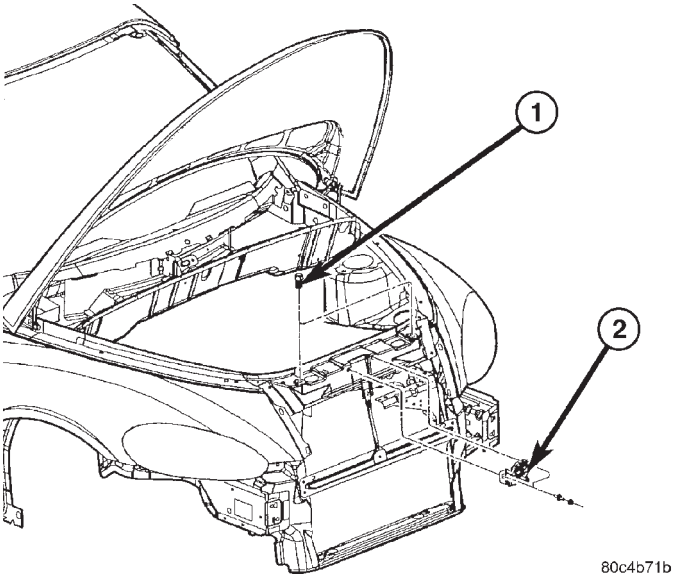

Fig. 18 Hood Latch

1 – HOOD ADJUSTER BUMPER
2 – HOOD LATCH

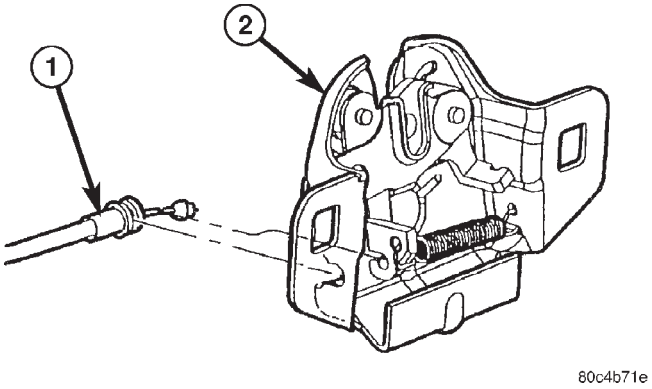

Fig. 19 Hood Latch Release Cable

1 – HOOD LATCH RELEASE CABLE
2 – HOOD LATCH

INSTALLATION

(1) Engage remote release cable into latch (Fig. 19).

(2) Place hood latch onto radiator closure panel (Fig. 18).

(3) Install bolts attaching latch to closure panel.

(4) Install grille.

(5) Close hood and verify alignment of hood and that latch is securely engaged.

HOOD LATCH STRIKER

REMOVAL

(1) Release hood latch and open hood.

(2) Remove bolts attaching striker to inside of hood (Fig. 20).

(3) Remove hood latch striker from vehicle.

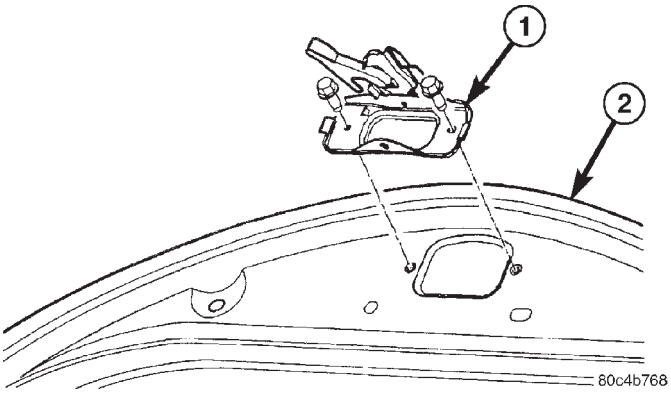

Fig. 20 Hood Striker

1 – HOOD STRIKER
2 – HOOD

INSTALLATION

(1) Position hood latch striker on vehicle (Fig. 20).

(2) Install bolts attaching hood latch striker to hood.

(3) Align hood latch striker to engage smoothly into hood latch.

(4) Verify hood operation and alignment. Adjust as necessary.

(5) Tighten attaching bolts to 13.5 N·m (10 ft. lbs.) torque.

HOOD RELEASE CABLE

REMOVAL

(1) Remove hood latch.

(2) Disconnect remote hood release cable from hood latch (Fig. 21).

(3) Remove left front cowl trim panel.

(4) Remove screws attaching hood release handle to cowl panel.

(5) Disconnect rubber grommet from dash panel behind instrument panel.

(6) Pull release cable through hole in dash panel.

(7) Remove cable and handle from vehicle.

INSTALLATION

(1) Assemble cable and handle onto vehicle.

(2) Push release cable through hole in dash panel.

(3) Connect rubber grommet into dash panel.

(4) Install screws attaching hood release handle to cowl panel.

REMOVAL AND INSTALLATION (Continued)

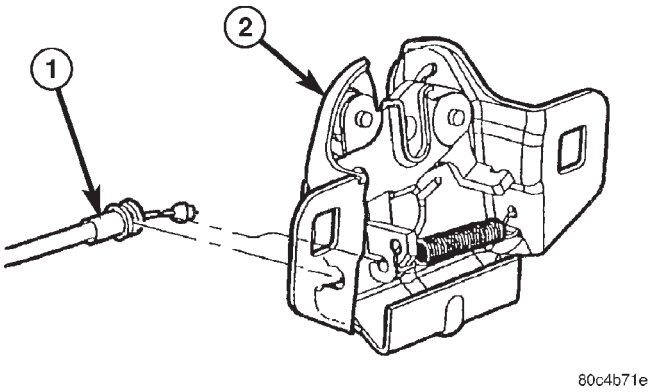

Fig. 21 Hood Latch Release Cable

1 – HOOD LATCH RELEASE CABLE
2 – HOOD LATCH

(5) Install left front cowl trim panel.
(6) Connect remote hood release cable to hood latch (Fig. 21).
(7) Install hood latch.
(8) Close hood and verify operation.

HOOD

REMOVAL

(1) Raise hood to full up position (Fig. 22).
(2) Mark all bolt and hinge attachment locations with a grease pencil or other suitable device to provide reference marks for installation.
(3) Remove the top bolts attaching hood to hinge and loosen the bottom bolts until they can be removed by hand.
(4) With assistance from a helper at the opposite side of the vehicle to support the hood, remove bottom bolts attaching hood to hinge.
(5) Remove the hood from the vehicle.

INSTALLATION

(1) Place hood in position on vehicle. With assistance from a helper at the opposite side of the vehicle to support the hood, install bottom bolts to hold hood to hinge finger tight (Fig. 22).
(2) Install top bolts attaching hood to hinge finger tight.
(3) When installing hood, align all marks and secure bolts. The hood should be aligned to 4 mm (0.160 in.) gap to the front fenders and flush across the top surfaces along fenders.
(4) Verify hood operation and alignment.

HOOD SILENCER

REMOVAL

(1) Open hood.

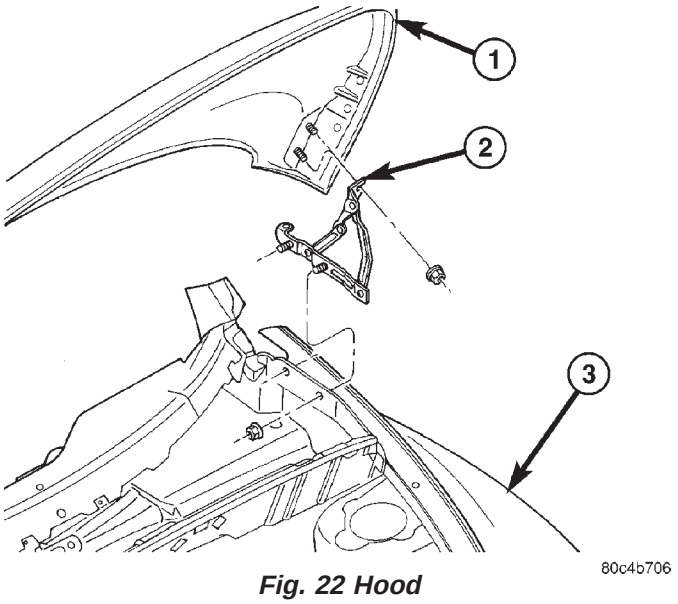

Fig. 22 Hood

1 – HOOD
2 – HOOD HINGE
3 – FRONT FENDER

(2) Remove fasteners attaching hood silencer to hood (Fig. 23).
(3) Remove hood silencer from vehicle.

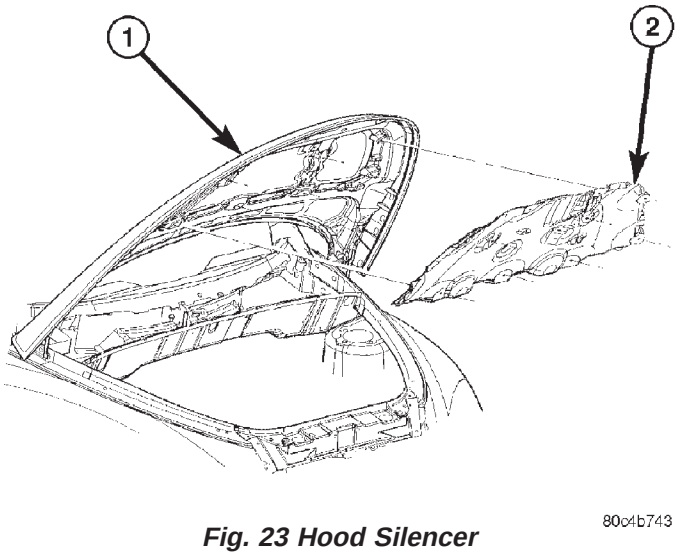

Fig. 23 Hood Silencer

1 – HOOD
2 – HOOD INNER PANEL SILENCER

INSTALLATION

(1) Place hood silencer in position on hood (Fig. 23).
(2) Install fastener attaching hood silencer to hood.
(3) Close hood.

REMOVAL AND INSTALLATION (Continued)

HOOD HINGE

REMOVAL

(1) Support hood on the side that requires hinge replacement.

(2) Mark all bolt and hinge attachment locations with a grease pencil or other suitable device to provide reference marks for installation.

(3) Remove bolts holding hood to hinge (Fig. 24).

(4) Remove bolts holding hood hinge to load beam flange and remove hinge from vehicle. If necessary, paint new hinge before installation.

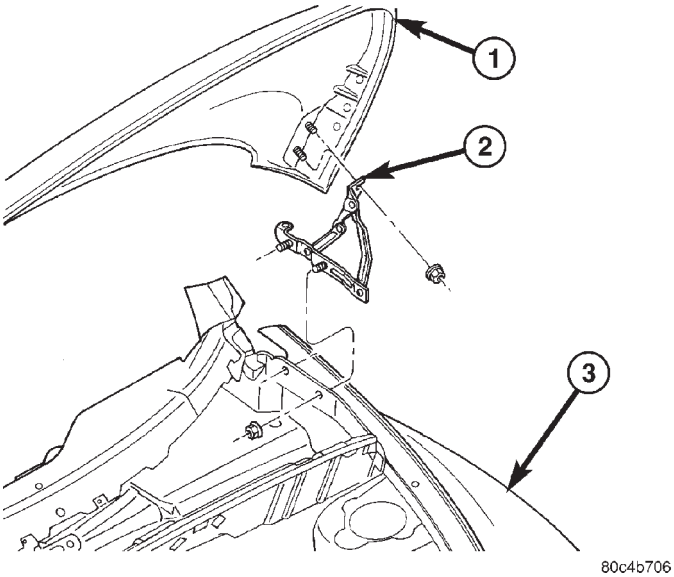

Fig. 24 Hood Hinge

1 – HOOD
2 – HOOD HINGE
3 – FRONT FENDER

INSTALLATION

(1) If necessary, paint new hinge before installation.

(2) Place hinge in position on vehicle (Fig. 24).

(3) Install bolts to hold hood hinge to front fender flange.

(4) Install bolts to hold hood to hinge.

(5) Align all marks and secure bolts. The hood should be aligned to 4 mm (0.160 in.) gap to the front fenders and flush across the top surfaces along fenders. Shims can be added or removed under hood hinge to achieve proper hood height.

(6) Remove support from under hood and verify hood operation.

UPPER RADIATOR CLOSURE PANEL

REMOVAL

(1) Open hood.

(2) Mark bolt locations on the upper radiator closure panel (Fig. 25).

(3) Remove fasteners attaching radiator closure panel to fenders.

(4) Move temperature sensor as necessary.

(5) Remove bolt attaching lower radiator closure panel to the upper radiator closure panel.

(6) For replacement of upper radiator closure panel, remove hood latch, and any other hardware.

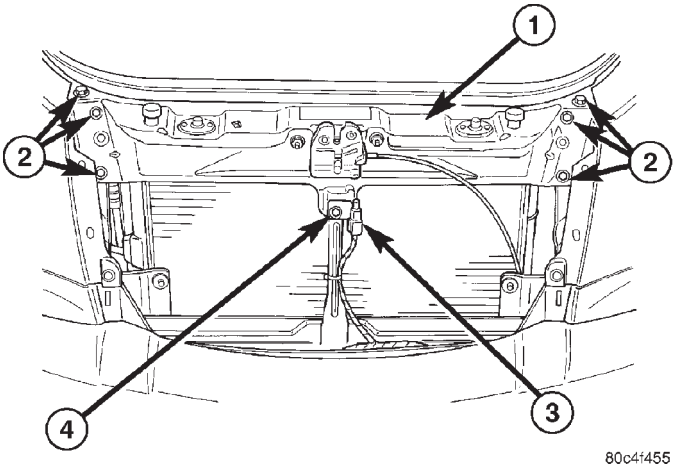

Fig. 25 Radiator Closure Panel

1 – UPPER RADIATOR CLOSURE PANEL
2 – UPPER CLOSURE ATTACHING FASTENERS
3 – TEMPERATURE SENSOR
4 – FASTENER ATTACHING LOWER CLOSURE PANEL TO UPPER CLOSURE PANEL

INSTALLATION

(1) Place in position the upper radiator closure panel (Fig. 25).

(2) Install bolts attaching upper radiator closure panel to fenders. Check bolt alignment marks.

(3) Install bolt attaching the lower radiator closure panel to upper radiator closure panel.

(4) Place in position temperature sensor in position.

(5) Install hood latch and cable.

(6) Check hood latch operation.

FRONT WHEELHOUSE SPLASH SHIELD

REMOVAL

(1) Hoist and support vehicle on safety stands.

(2) Remove front wheel.

(3) Remove push-in fasteners attaching splash shield to frame rail forward of suspension (Fig. 26).

(4) Remove push in fasteners attaching splash shield to frame rail rearward of suspension.

REMOVAL AND INSTALLATION (Continued)

(5) Remove screws attaching wheelhouse splash shield to front fender.

(6) Remove splash shield from vehicle.

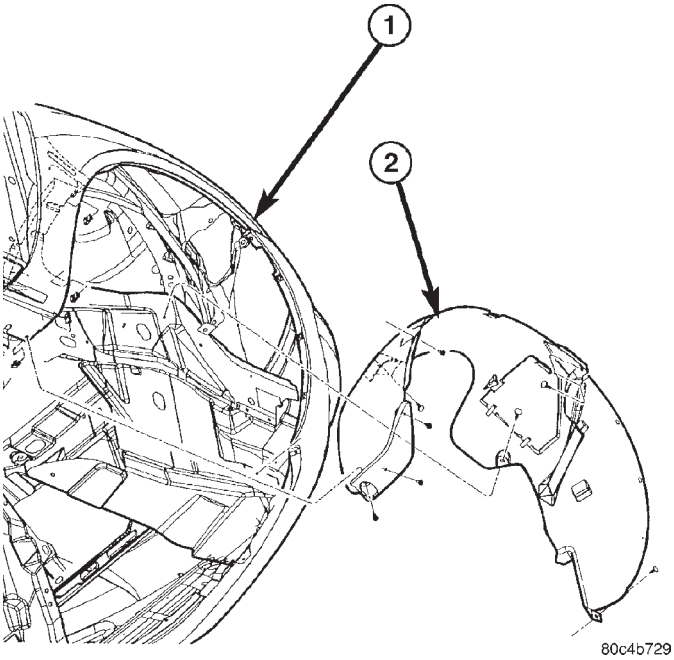

Fig. 26 Front Wheelhouse Splash Shield

1 – FRONT FENDER
2 – FRONT FENDER SPLASH SHIELD

INSTALLATION

(1) Place splash shield in position on vehicle (Fig. 26).

(2) Install screws attaching wheelhouse splash shield to front fender.

(3) Install push in fasteners attaching splash shield to frame rail rearward of suspension.

(4) Install push in fasteners attaching splash shield to frame rail forward of suspension.

(5) Install front wheel.

(6) Lower vehicle.

FRONT SIDE RAIL ACCESS PULLEY SPLASH SHIELD

REMOVAL

(1) Hoist and support vehicle on safety stands.

(2) Remove front wheel.

(3) Remove fasteners attaching lower fascia and air dam. Pull fascia forward to access fastener attaching front edge of the splash shield.

(4) Remove push-in fasteners attaching side rail access pulley splash shield to frame rail forward of suspension (Fig. 27).

(5) Remove side rail access pulley splash shield from vehicle.

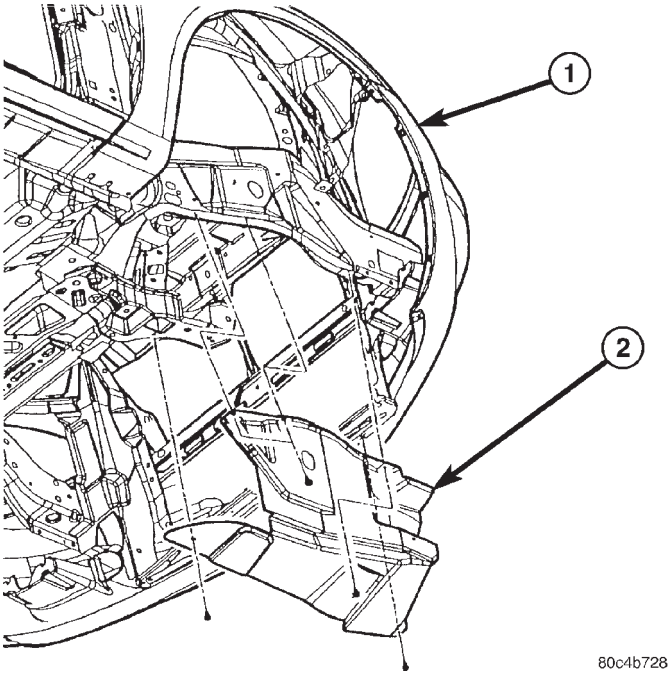

Fig. 27 Front Side Rail Access Pulley Splash Shield

1 – FRONT FENDER
2 – FRONT SIDE RAIL ACCESS PULLEY SPLASH SHIELD

INSTALLATION

(1) Place side rail access pulley splash shield in position on vehicle (Fig. 27).

(2) Install fasteners attaching side rail access pulley splash shield to frame rail.

(3) Install fasteners attaching fascia and air dam.

(4) Install front wheel.

(5) Lower vehicle.

REMOVAL AND INSTALLATION (Continued)

FENDER

REMOVAL

(1) Remove headlamp housing.
(2) Right side of vehicle remove front side rail access pulley splash shield.
(3) Remove splash shield.
(4) Remove fender to fascia nuts.
(5) Remove fender bolt to lower rocker panel (Fig. 28).
(6) Remove fender bolt to lower cowl.
(7) Pull fascia away from fender.
(8) Remove bolts attaching fender to upper rail.
(9) Remove fender from vehicle.

INSTALLATION

(1) Place fender in position on vehicle (Fig. 28).
(2) Start the center upper rail bolt.
(3) From inside engine compartment, install all the bolts attaching fender to upper rail and tighten.
(4) Install lower cowl panel bolt to fender.
(5) Install rocker panel bolt to fender.
(6) Place fascia into position.
(7) Install fender to fascia nuts.
(8) Install inner splash shield.
(9) Install right side pulley splash shield.
(10) Install headlamp assembly.
(11) Check fender for flush and gap.

EXTERIOR BADGEING ATTACHED WITH DOUBLE SIDED FOAM TAPE

REMOVAL

(1) Mark reference points before removing.
(2) Using a heat gun gently apply heat in a circular motion to loosen the adhesive bond.
(3) Using a nonmetallic prying device, such as a plastic or wood trim stick gently pry up at corners and remove.
(4) Clean off all traces of adhesive or double sided tape from the panel with a general purpose adhesive remover.

INSTALLATION

(1) Clean panel surface with isopropyl alcohol.
(2) Align badgeing to reference points.
(3) Install and press securely to full adhesive contact
(4) Clean away any reference points.

EXTERIOR BADGEING/TAPE STRIPES ATTACHED WITH ADHESIVES

REMOVAL

(1) Mark reference points before removing.
(2) Using a heat gun gently apply heat in a circular motion to loosen the adhesive bond.
(3) With your fingernail lift up and peel away badgeing/tape from panel, using a heat gun as you go.
(4) Clean off all traces of adhesive from the panel(s) with a general purpose adhesive remover.

INSTALLATION

(1) Clean panel surface with isopropyl alcohol.
(2) Remove paper carrier and align badgeing/tape to reference points or adjacent panel.

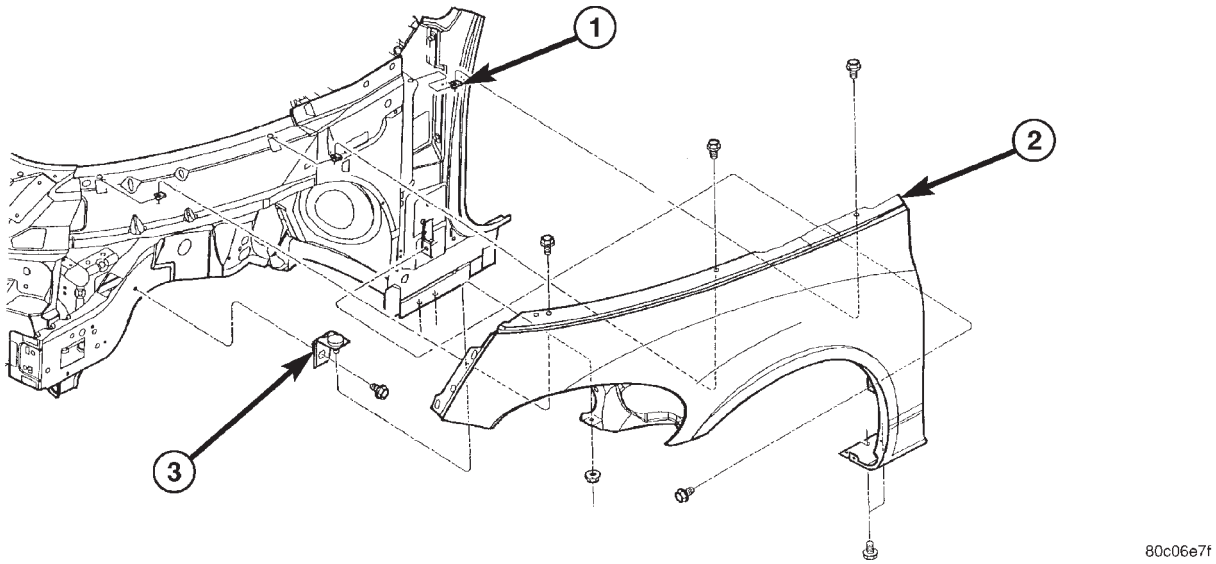

Fig. 28 Fender

1 – U-NUTS
2 – FRONT FENDER
3 – FRONT FENDER SUPPORT

REMOVAL AND INSTALLATION (Continued)

(3) Install and press securely, using a plastic spreader to eliminate all air bubbles.
(4) Remove top protective carrier.
(5) Clean away any reference points.

FRONT DOOR TRIM

REMOVAL

(1) Release door latch and open door.
(2) Lower door glass.
(3) Remove screw from inside arm rest pull cup (Fig. 29).
(4) Remove fasteners from door trim panel.
(5) Remove screw from behind inside remote handle.
(6) Disengage push-in fasteners attaching trim to door panel around perimeter of trim panel.
(7) Tilt trim panel outward to clear locator pins on backside of trim panel.
(8) Disconnect trim panel from retainer channel in inner belt weatherstrip at top of door by lifting while gently jiggling.
(9) Move trim panel away from door and disengage clip attaching inside remote handle link..
(10) Remove inside remote handle link..

CAUTION: Do not allow door trim panel to hang by the wire connector or wiring.

(11) Disconnect wire connector from power door lock switch, mirror switch, and power window switch if so equipped.
(12) Remove trim panel from door.

INSTALLATION

(1) Replace any damaged or missing push in fasteners from around perimeter of door trim panel (Fig. 29).
(2) Place trim panel near door.
(3) Connect wire connector into power door lock switch, mirror switch, and power window switch, if so equipped.
(4) Insert inside remote handle link into handle and engage clip.
(5) Install trim panel over lock knob and into inner belt retainer channel at top of door and push down to seat.
(6) Locate door trim panel to inner door panel by aligning locating pins on backside of trim panel to mating holes in inner door panel.
(7) Install push in fasteners to hold trim to door panel around perimeter of trim panel.
(8) Install screw behind inside remote handle.
(9) Install screw inside arm rest pull cup.

FRONT DOOR WATER DAM

REMOVAL

(1) Remove door trim panel.
(2) Remove door speaker, if equipped.
(3) Remove armrest to inner panel bracket.
(4) Disconnect outside power mirror and power window regulator connectors, if equipped.
(5) Peel water dam away from adhesive around perimeter of inner door panel (Fig. 30).

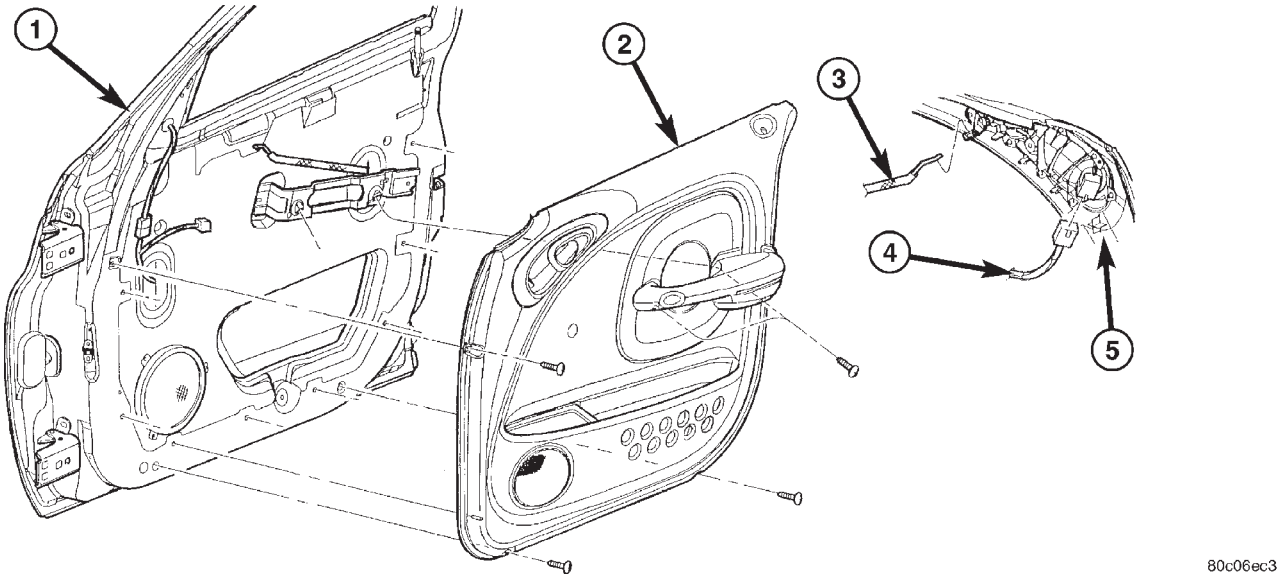

Fig. 29 Front Door Trim

1 – FRONT DOOR
2 – FRONT DOOR TRIM PANEL
3 – FRONT DOOR INSIDE REMOTE HANDLE LINK AND SLEEVE TO LATCH
4 – FRONT DOOR WIRE CONNECTOR
5 – FRONT DOOR INSIDE REMOTE HANDLE/POWER DOOR LOCK SWITCH BEZEL

REMOVAL AND INSTALLATION (Continued)

INSTALLATION

(1) Insure that enough adhesive remains to securely retain the water dam. Replace as necessary (Fig. 30).

(2) Place the water dam into position and press securely to adhesive making sure to properly route wiring and linkages.

(3) Engage clip attaching lock linkage to lock button bell-crank.

(4) Install door trim pull cup mount bracket.

(5) Install door speaker, if equipped.

(6) Install door trim panel.

DOOR OUTER BELT WEATHERSTRIP

REMOVAL

(1) Open door glass.

(2) Remove weatherstrip screw at the rearward edge of door (Fig. 31).

(3) Pull upward at rear end of outer belt weatherstrip.

(4) Remove outer belt weatherstrip from vehicle.

INSTALLATION

(1) Starting at leading edge of door, press weatherstrip into position (Fig. 31).

(2) Install screw into weatherstrip.

(3) Operate window and check for interference.

FRONT/REAR DOOR INNER BELT WEATHERSTRIP

REMOVAL

(1) Remove door trim panel.

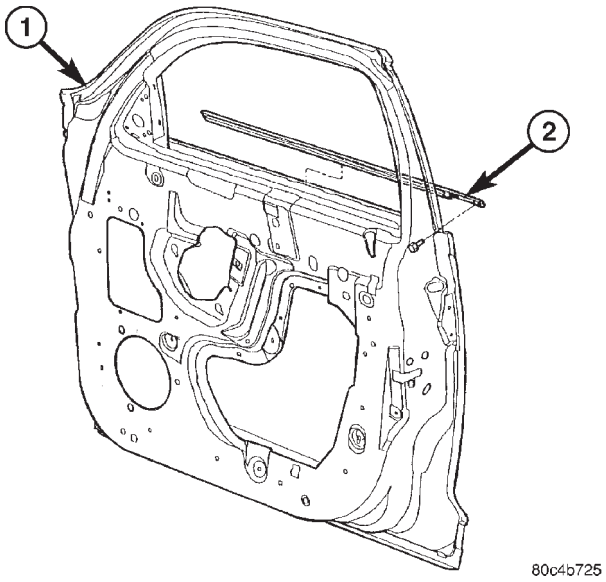

Fig. 31 Door Outer Belt Weatherstrip

1 – FRONT DOOR
2 – DOOR OUTER BELT WEATHERSTRIP

(2) Remove inner belt weatherstrip from door. If necessary, use a rubber mallet and a block of wood, tapping upward at each clip attaching the molding to the door (Fig. 32) or (Fig. 33).

INSTALLATION

(1) Align the weatherstrip to the “B” and “C” pillars.Push down on weatherstrip to engage channel to door panel (Fig. 32) or (Fig. 33).

(2) Install door trim panel.

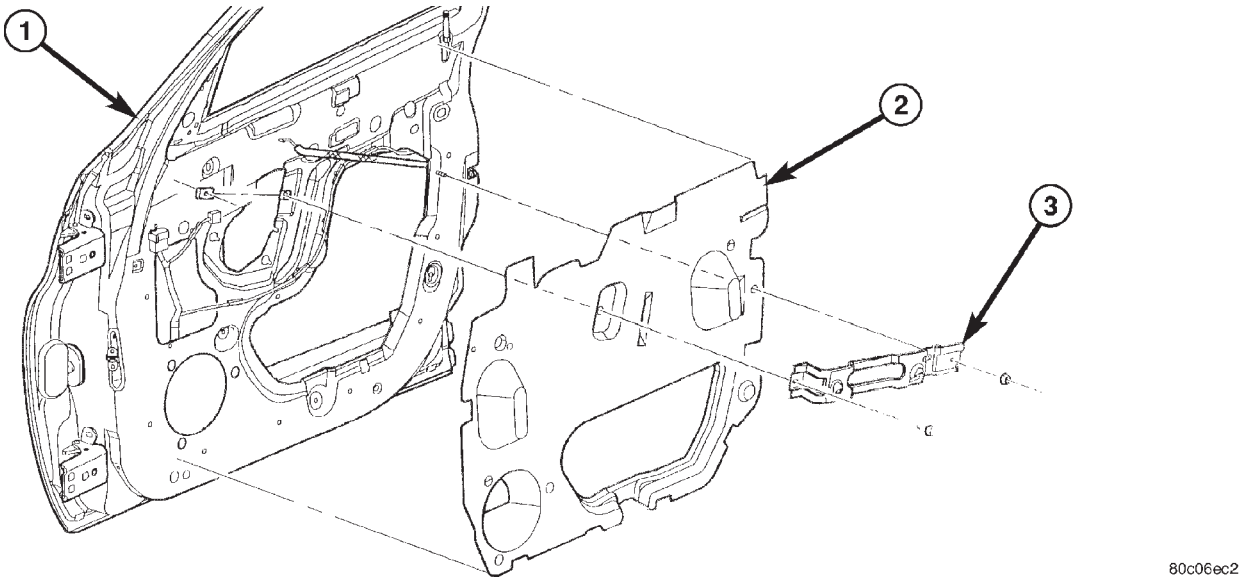

Fig. 30 Water Dam

1 – FRONT DOOR
2 – FRONT DOOR WATER DAM
3 – FRONT DOOR ARMREST TO INNER PANEL ATTACHING BRACKET

REMOVAL AND INSTALLATION (Continued)

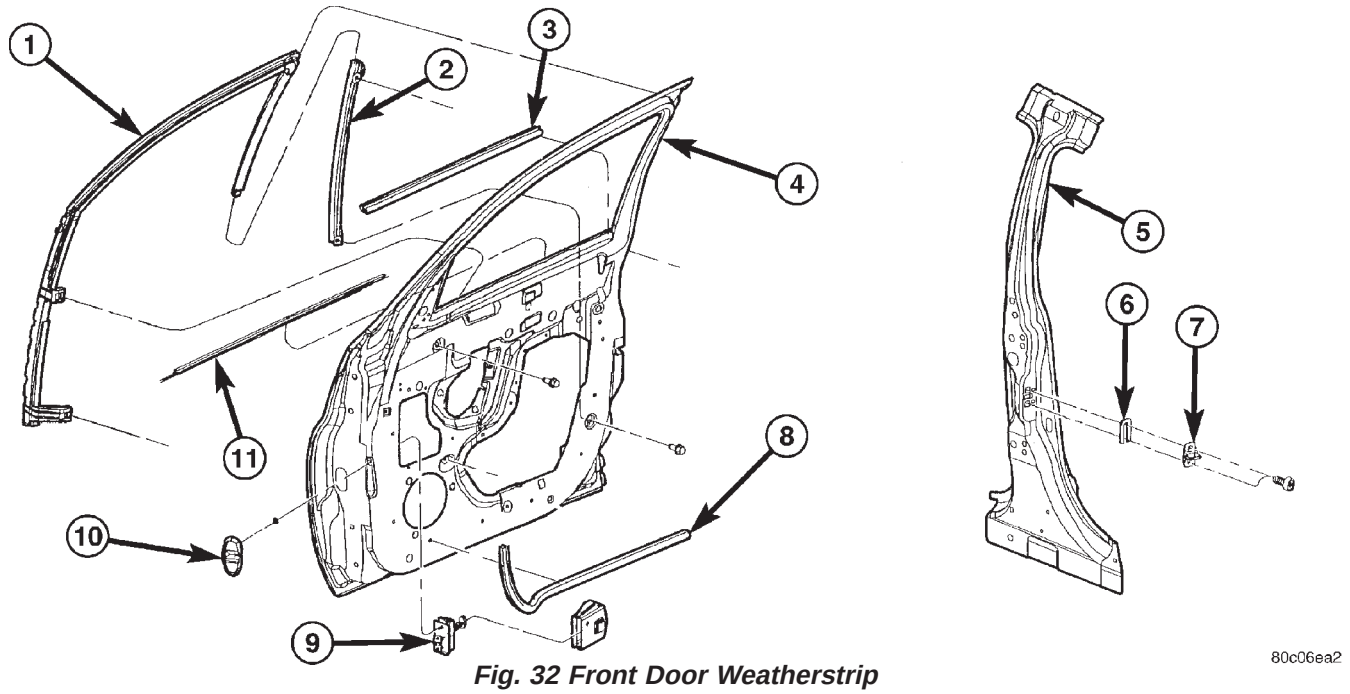

Fig. 32 Front Door Weatherstrip

1 – FRONT DOOR GLASS RUN WEATHERSTRIP
2 – FRONT DOOR GLASS LOWER REAR CHANNEL
3 – FRONT DOOR INNER BELT WEATHERSTRIP
4 – FRONT DOOR
5 – B-PILLAR
6 – FRONT DOOR LATCH STRIKER SPACER
7 – FRONT DOOR LATCH STRIKER
8 – FRONT DOOR SILL WEATHERSTRIP
9 – FRONT DOOR CHECK STRAP AND COVER
10 – FRONT DOOR CHECK STRAP SEAL
11 – FRONT DOOR OUTER BELT WEATHERSTRIP

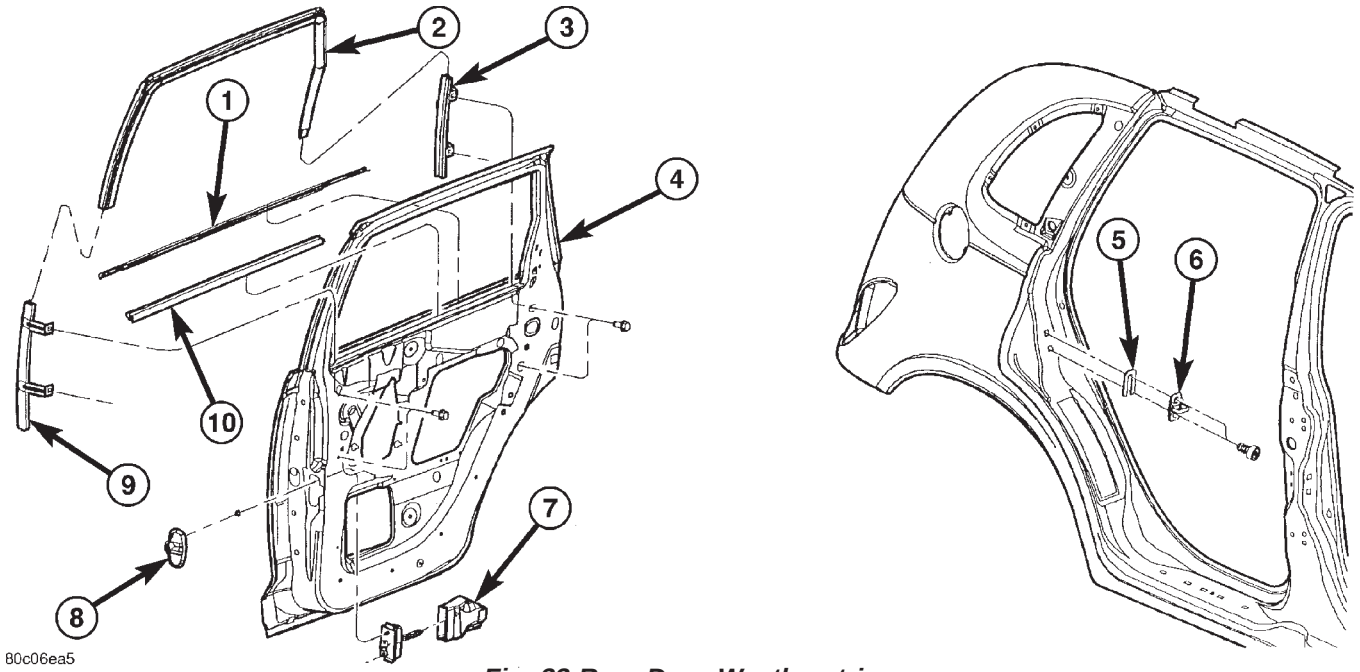

Fig. 33 Rear Door Weatherstrip

1 –REAR DOOR OUTER BELT WEATHERSTRIP
2 – REAR DOOR GLASS RUN WEATHERSTRIP
3 – REAR DOOR GLASS LOWER CHANNEL REAR
4 – REAR DOOR
5 – REAR DOOR LATCH STRIKER SPACER
6 – REAR DOOR LATCH STRIKER
7 – REAR DOOR CHECK STRAP AND COVER
8 – REAR DOOR CHECK STRAP SEAL
9 – REAR DOOR GLASS LOWER CHANNEL FRONT
10 – REAR DOOR INNER BELT WEATHERSTRIP

REMOVAL AND INSTALLATION (Continued)

FRONT DOOR GLASS RUN WEATHERSTRIP

REMOVAL

(1) Remove flag cover, door trim panel, water dam as necessary.
(2) Remove door glass.
(3) Loosen side view mirror, as necessary.
(4) Remove weatherstrip fasteners (Fig. 32) or (Fig. 33).
(5) Pull weatherstrip from lower front channel above door latch.
(6) Pull run weatherstrip from window frame channel.

INSTALLATION

(1) Clean butyl material from door flange area.
(2) Place door run weatherstrip in position on window frame channel (Fig. 32) or (Fig. 33).
(3) Starting in the corners, push door run weatherstrip into window frame channel.
(4) Push weatherstrip into lower front channel above door latch.
(5) Install weatherstrip fasteners.
(6) Install door glass.
(7) Tighten side view mirror.
(8) Install pull cup support bracket, water shield, door trim panel and flag trim.

FRONT DOOR OUTSIDE HANDLE

REMOVAL

(1) Remove door trim panel and water dam.
(2) Move door glass to the up position.
(3) Disconnect outside door handle link to latch.
(4) Remove nut attaching outside door handle to outer door panel (Fig. 34).
(5) Remove door handle from vehicle.

INSTALLATION

(1) Install door handle latch link to handle.
(2) Position door handle into door (Fig. 34).
(3) Install fasteners attaching door handle to outer door panel.
(4) Connect lock and latch rods to door latch.
(5) Install door trim panel and water dam.

DOOR LOCK CYLINDER

REMOVAL

(1) Remove door trim panel and water dam.
(2) Raise door glass.
(3) Disconnect door lock rod from latch (Fig. 34).

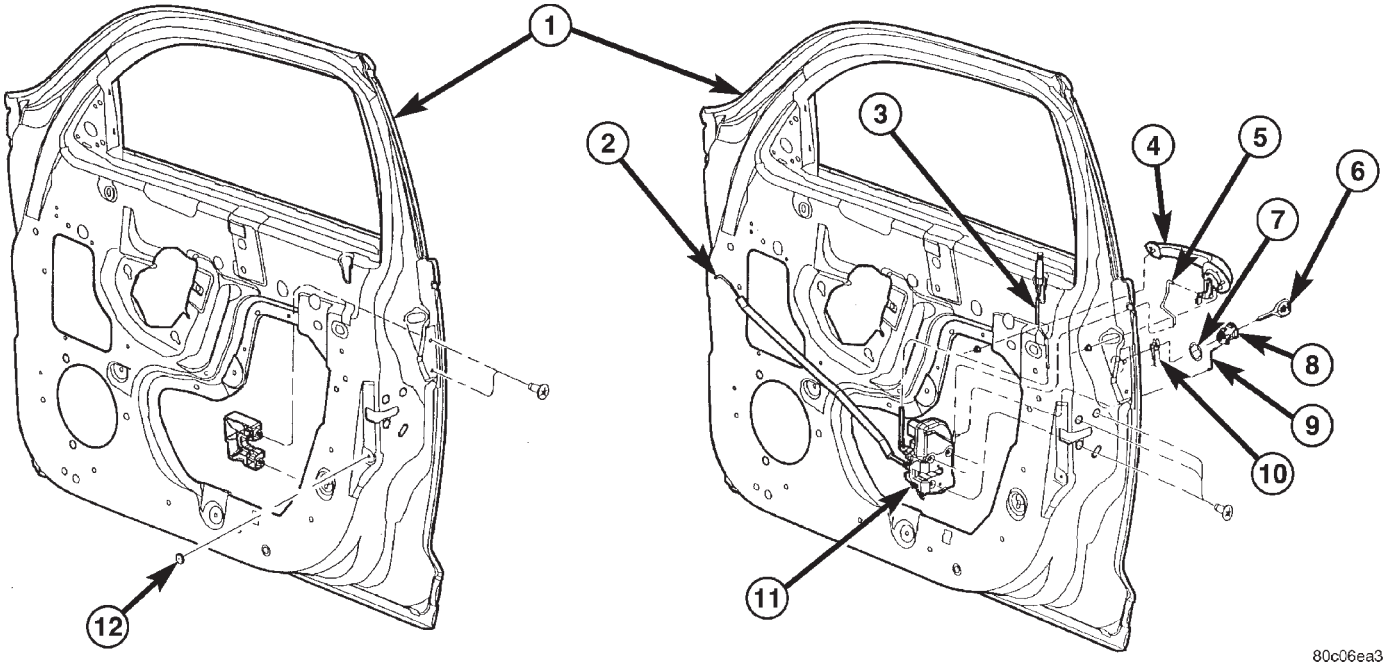

Fig. 34 Front Door Outside Handle

1 - FRONT DOOR
2 - FRONT DOOR INSIDE REMOTE HANDLE TO LATCH LINK AND SLEEVE
3 - FRONT DOOR LATCH LINKAGE KNOB AND ROD
4 - FRONT DOOR OUTSIDE HANDLE
5 - FRONT DOOR OUTSIDE HANDLE TO LATCH LINK
6 - IGNITION KEY
7 - FRONT DOOR LOCK CYLINDER GASKET
8 - FRONT DOOR LOCK CYLINDER LOCK
9 - FRONT DOOR KEY CYLINDER TO LATCH LINK
10 - CENTRAL LOCKING SWITCH
11 - FRONT DOOR OVERRIDE LOCKS LATCH
12 - DOOR AJAR SWITCH BUMPER

REMOVAL AND INSTALLATION (Continued)

(4) Disengage wiring from lock cylinder if so equipped.
(5) Remove fasteners attaching lock cylinder retainer to door.
(6) Remove lock cylinder retainer.
(7) Pull lock cylinder from door handle.

INSTALLATION

(1) Place lock cylinder and gasket into door outer panel (Fig. 34).
(2) Install cylinder retainer to door.
(3) Connect door lock rod from latch.
(4) Engage wiring connectors, if equipped.
(5) Install door trim panel and water dam.

FRONT DOOR LATCH

REMOVAL

(1) Remove door trim panel and water shield.
(2) Raise door glass.
(3) Disconnect lock and latch rods from door latch (Fig. 34) and (Fig. 35).
(4) Disengage wire connector from power door lock motor, if equipped.
(5) Remove screws attaching latch to door end frame.
(6) Remove door latch from vehicle.

INSTALLATION

CAUTION: Do not close door before adjusting the door latch. Door may fail to open.

(1) Position door latch inside door and install screws holding latch to door end frame (Fig. 34) and (Fig. 35).
(2) Engage wire connector into power door lock motor, if so equipped.
(3) Connect latch and lock rods to door latch.
(4) Install door trim panel and water shield.
(5) Adjust door latch using procedure in this section.

FRONT DOOR LATCH STRIKER

REMOVAL

(1) Mark outline of door latch striker on B-pillar to aid installation.
(2) Remove screws attaching door latch striker to B-pillar (Fig. 33).

INSTALLATION

(1) Install door latch striker into the door (Fig. 33).
(2) Install screws attaching door latch striker to B-pillar loosely.
(3) Align door latch striker to outline marks on the B-pillar

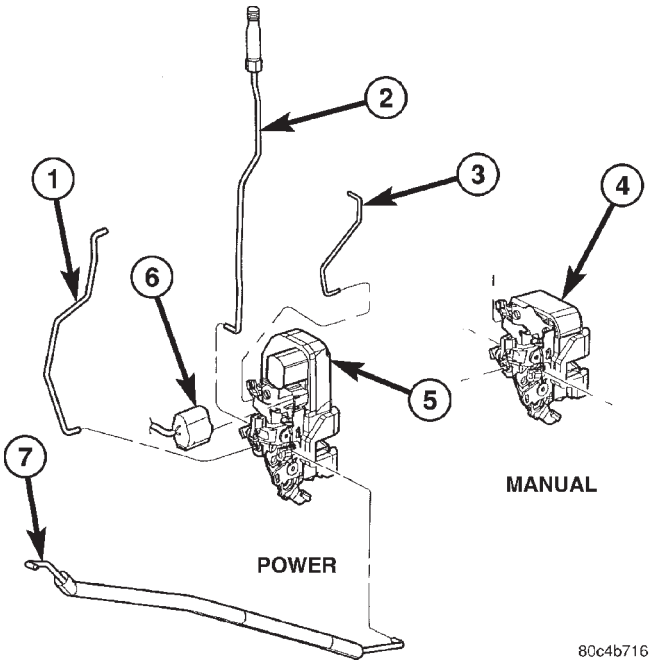

Fig. 35 Front Door Latch

1 - FRONT DOOR OUTSIDE HANDLE TO LATCH LINK
2 - FRONT DOOR LATCH LINKING KNOB AND ROD
3 - FRONT DOOR KEY TO LATCH LINK
4 - FRONT DOOR OVERRIDE MANUAL LOCK LATCH
5 - FRONT DOOR OVERRIDE POWER LOCK LATCH
6 - OVERRIDE POWER LOCK LATCH CONNECTOR
7 - FRONT DOOR INNER ROD CONNECTING INSIDE REMOTE HANDLE TO LATCH LINK AND SLEEVE

(4) Tighten screws attaching door latch striker to B-pillar.
(5) Check door alignment and adjust as necessary.

FRONT VERTICAL GUIDE BAR

REMOVAL

(1) Remove door trim panel and water dam.
(2) Remove door speaker, if equipped.
(3) Remove front lift guide.
(4) Remove bolt attaching top of front guide bar to inner door panel.
(5) Using a Snap-on® flare-nut socket (FRXM10) and a hex wrench, remove nut attaching bottom of guide bar to door panel while holding jack screws.

INSTALLATION

(1) Install nut attaching bottom of guide bar to door panel.
(2) Install bolt attaching top of front guide bar to inner door panel.
(3) Install front lift guide.
(4) Install door speaker, if equipped.
(5) Verify door glass alignment, adjust if necessary.
(6) Install door trim panel and water dam.

REMOVAL AND INSTALLATION (Continued)

FRONT DOOR GLASS

REMOVAL

(1) Remove door trim panel and water dam.
(2) Remove inner door belt weatherstrip (Fig. 36).
(3) Lower door glass to bottom of door to gain access to attaching bolts.
(4) Loosen bolts attaching door glass to window regulator lift plates.
(5) Disengage door glass from regulator.
(6) Lift door glass upward, tilting down at the front and up at the back, out of the opening at the top of door.

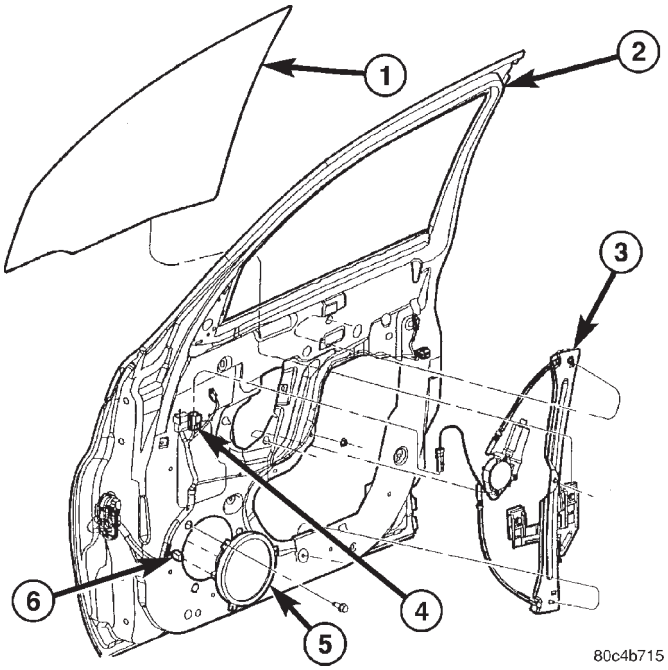

Fig. 36 Front Door Glass–Power Window

1 - FRONT DOOR WINDOW GLASS
2 - FRONT DOOR
3 - FRONT DOOR WINDOW POWER REGULATOR
4 - POWER WINDOW REGULATOR WIRING CONNECTOR
5 - FRONT DOOR SPEAKER
6 - SPEAKER WIRE CONNECTOR

INSTALLATION

(1) Carefully lower door glass through opening in top of door.
(2) Position door glass into window regulator lift plates (Fig. 36).
(3) Install bolts door glass to lift plates and do not tighten.
(4) Raise glass to the full up position and then tighten the lift plate bolts.
(5) Install inner door belt weatherstrip.
(6) Install door trim panel and water dam.

FRONT DOOR WINDOW REGULATOR

REMOVAL

(1) Remove front door trim panel.
(2) Remove front door glass from regulator channel.
(3) Loosen screws attaching window regulator channel and crank housing to door panel (Fig. 36).
(4) Disengage screw and bolt heads from keyhole slots in door panel.
(5) Loosen bolts attaching window regulator to door panel.
(6) Disengage regulator from door panel, and crank housing.
(7) Slide regulator rearward and rotate forward end of roller channel through access hole in door panel,
(8) Remove window regulator from door through access hole in inner panel.

INSTALLATION

(1) Position window regulator and crank housing on door panel through access hole in door panel (Fig. 36).
(2) Tighten bolts attaching window regulator to door panel.
(3) Engage window regulator bolt heads on channel to key hole slots in door panel.
(4) Tighten screw attaching window regulator channel and crank housing.
(5) Position glass to regulator roller channel.
(6) Tighten fasteners attaching door glass to roller channel.
(7) Install door trim panel.

FRONT DOOR CHECK STRAP

REMOVAL

(1) Remove door trim panel and water dam.
(2) Remove bolt attaching check strap to hinge pillar.
(3) Remove door speaker.
(4) Remove glass run.
(5) Remove bolts attaching check strap to door end frame.
(6) Remove check strap and cover from vehicle.

INSTALLATION

NOTE: Do not grease check strap.

(1) Assemble check strap cover to check strap.
(2) Position door check on vehicle and install bolts attaching strap to door end frame.
(3) Install glass run.
(4) Install door speaker, if so equipped.

REMOVAL AND INSTALLATION (Continued)

(5) Install bolt attaching door check strap to hinge pillar.

(6) Install door trim panel and water dam.

FRONT DOOR

REMOVAL

NOTE: The retaining clips used on the door hinge pins are not to be reused. Verify availability prior to proceeding.

(1) Open and support door on a suitable lifting device.

(2) Disconnect wire connector at hinge pillar, if necessary.

(3) Mark the location of the hinge.

(4) Remove bolts attaching door check strap to hinge pillar (Fig. 37).

(5) Remove bolts attaching lower hinge to door.

(6) Remove bolts attaching upper hinge to door.

(7) Remove door from vehicle.

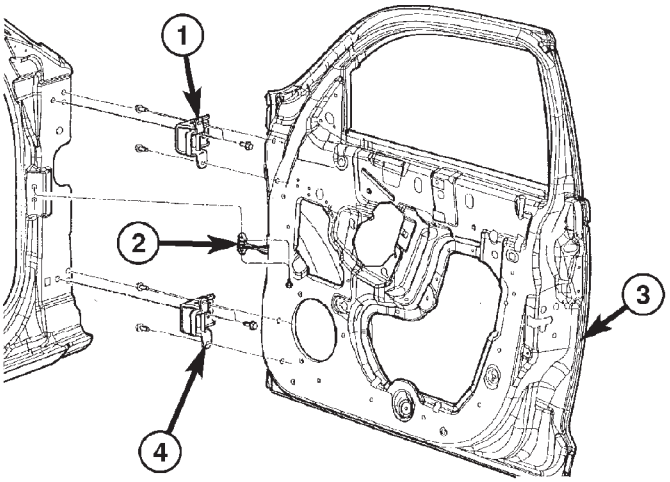

Fig. 37 Front Door Hinges

1 - FRONT DOOR UPPER HINGE
2 - FRONT DOOR CHECK STRAP
3 - FRONT DOOR
4 - FRONT DOOR LOWER HINGE

INSTALLATION

(1) Align the hinge marks and position door to the hinges on vehicle (Fig. 37).

(2) Install bolt into hinge top hole on the right side or bottom hole left side (smallest hole).

(3) Install bolt into hinge bottom hole on the right side or top hole left side (slotted hole).

(4) Install bolts attaching door check strap to hinge pillar.

(5) Connect wire connector at hinge pillar, if necessary.

(6) Verify door flush and gap measurements, adjust as necessary.

FRONT DOOR HINGE

REMOVAL

(1) Open and support door on a suitable lifting device.

(2) Remove bolts attaching door check strap to lower A-pillar for greater access, if necessary (Fig. 37).

(3) Mark position of hinge on both the door end frame and lower A-pillar to ease installation.

(4) Remove bolts attaching hinge to door end frame.

(5) Remove bolts attaching hinge to lower A-pillar.

(6) Remove door hinge from vehicle.

INSTALLATION

CAUTION: When installing a new hinge, make sure that the head of each hinge pin is fully seated into the door hinge. Also, remove the plastic shipping clip and replace it with the correct metal retaining clip once the hinge pin is seated.

(1) If necessary, paint new door hinge prior to installation.

(2) Position door hinge on vehicle (Fig. 37).

(3) Loosely install bolts attaching hinge to lower A-pillar.

(4) Loosely install bolts attaching hinge to door end frame.

(5) Align hinge to marks made previously and tighten all bolts.

(6) Install bolts attaching door check strap to lower A-pillar, if removed previously.

(7) Verify door fit and operation. Adjust door hinge for proper door alignment, if necessary.

REMOVAL AND INSTALLATION (Continued)

FRONT/REAR DOOR OPENING WEATHERSTRIP

REMOVAL

(1) Open front/rear door.
(2) Remove door opening sill plate.
(3) Pull body mounted weatherstrip from fence around door opening (Fig. 38).

INSTALLATION

(1) Position weatherstrip at the B-pillar upper corner (Fig. 38).
(2) Engage front/rear weatherstrip on the fence at upper B-pillar and work down the B-pillar.
(3) Engage weatherstrip along the header and down the A-pillar/C-pillar.
(4) Engage weatherstrip along the sill. There may be slack material work it to the front of the opening.
(5) Verify weatherstrip sealing.

FRONT/REAR DOOR UPPER SECONDARY WEATHERSTRIP

REMOVAL

(1) Open the front/rear door.
(2) Using a wide blade flat tool, unseat the push pin at the base of the “A” pillar.
(3) Pull the weatherstrip off the vehicle.

INSTALLATION

(1) Clean off any remain butyl residue on the body.
(2) Push seal into position under the quarter window glass and along the door opening.
(3) Locate the push pins at the base of the “A” pillar and push into place.
(4) Install the remainder of the seal.

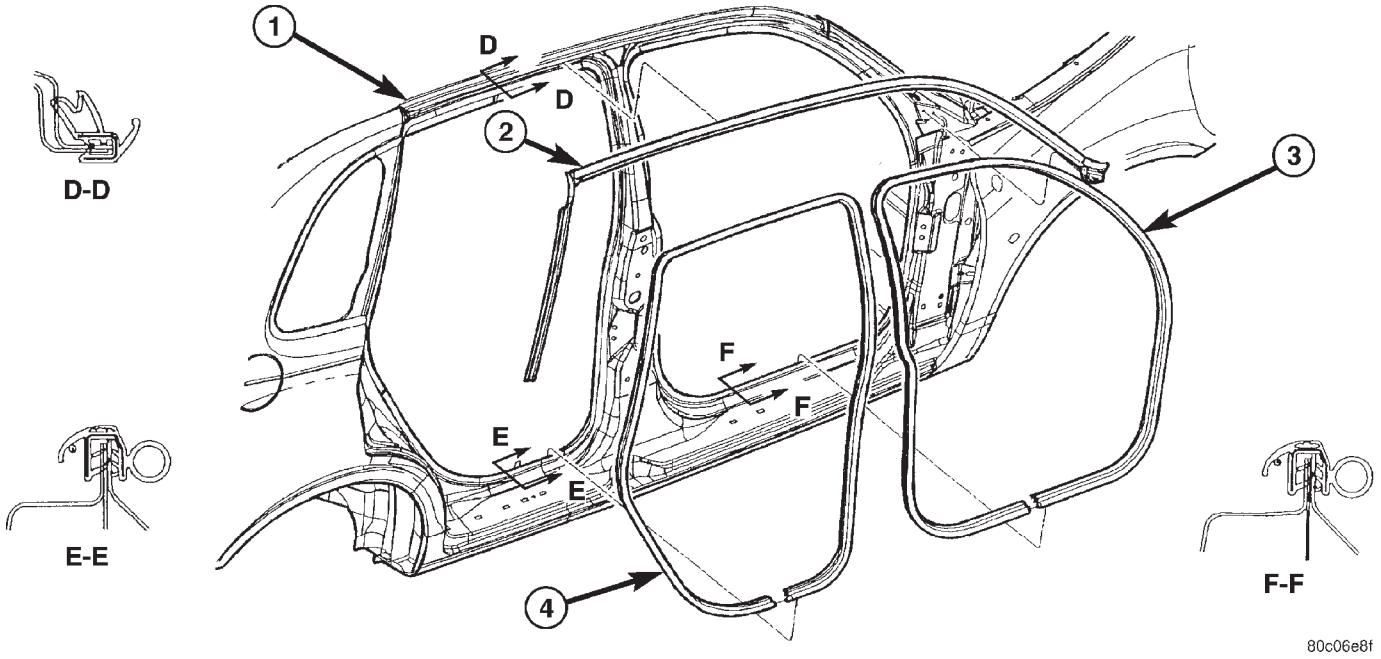

Fig. 38 Front Door Body Mounted Weatherstrip

1 - ROOF LINE
2 - FRONT/REAR DOOR UPPER SECONDARY WEATHERSTRIP
3 - FRONT DOOR OPENING WEATHERSTRIP
4 - REAR DOOR OPENING WEATHERSTRIP

REMOVAL AND INSTALLATION (Continued)

SIDE VIEW MIRROR

REMOVAL

(1) Disengage the clips retaining the side mirror bezel to stanchion.(Left side only with manual mirror).

(2) Remove door trim panel if necessary.

(3) Remove nuts attaching mirror to door inner panel (Fig. 39) or (Fig. 40).

(4) Manual mirrors snap left side manual remote from bezel.

(5) Electrical mirrors disconnect wire connector.

(6) Remove mirror from vehicle.

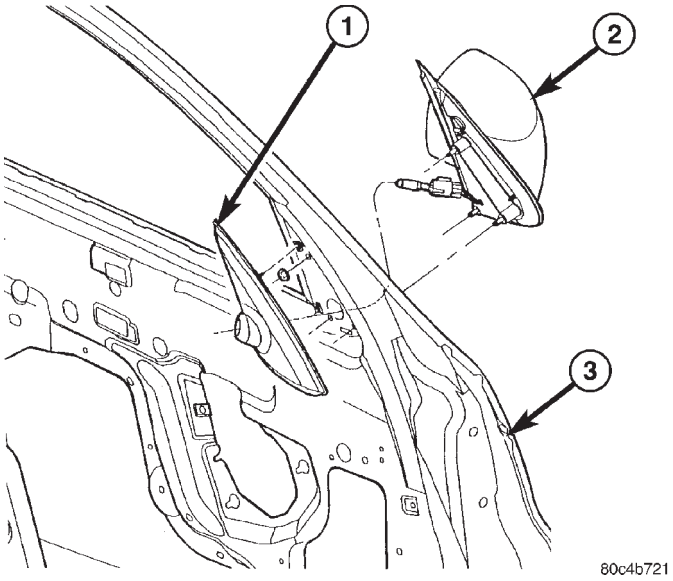

Fig. 39 Manual Side View Mirror

1 - INSIDE REMOTE CONTROL MIRROR BEZEL
2 - FRONT DOOR OUTSIDE REMOTE CONTROL MIRROR
3 - FRONT DOOR

INSTALLATION

(1) Connect electrical mirror wire connector.

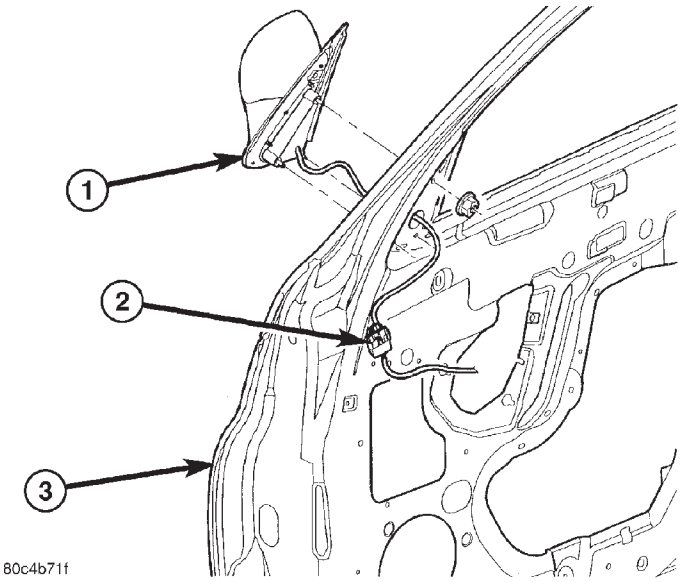

Fig. 40 Power Side View Mirror

1 - MIRROR
2 - WIRING CONNECTOR
3 - FRONT DOOR

(2) Position side view mirror on vehicle (Fig. 39) or (Fig. 40).

(3) Install nuts attaching mirror.

(4) Install mirror bezel or door trim panel as necessary.

SIDE VIEW MIRROR TRIM BEZEL

REMOVAL

(1) Disengage clips attaching side view mirror bezel to stanchion. Left side only with manual mirrors.

(2) Remove mirror bezel from vehicle.

INSTALLATION

(1) Place mirror bezel in position.

(2) Engage clips attaching side view mirror bezel to stanchion.

REMOVAL AND INSTALLATION (Continued)

SILL SECONDARY WEATHERSTRIP

REMOVAL

(1) Using a fork-type prying tool, disengage push in fasteners attaching sill secondary weatherstrip to door (Fig. 41).

(2) Remove weatherstrip from door.

INSTALLATION

(1) Position weatherstrip to door (Fig. 41).

(2) Press sill secondary weatherstrip fasteners into position.

REAR DOOR TRIM

REMOVAL

(1) Release door latch and open door.

(2) Lower window glass.

(3) Remove screw from inside arm rest pull cup (Fig. 42).

(4) Remove screw from behind inside latch release handle.

(5) Remove fasteners from door trim panel.

(6) Disengage push in fasteners attaching trim to door panel around perimeter of trim panel.

(7) Disengage push-in metal spring clip attaching trim in sail flag area.

(8) Lift trim panel up off belt weatherstrip.

(9) Tilt top of trim panel away from door and disengage clip attaching latch rod to handle.

(10) Remove latch rod from handle.

(11) Remove trim panel from door.

INSTALLATION

(1) Replace any damaged or missing push in fasteners from around perimeter of door trim panel.

(2) Place trim panel in position on door (Fig. 42).

(3) Insert latch rod into handle and engage clip.

(4) Engage trim panel into retainer channel at top of door.

(5) Locate door trim panel to inner door panel by aligning locating pins on backside of trim panel to mating holes in inner door panel.

(6) Engage push in fasteners attaching trim to door panel around perimeter of trim panel.

(7) Install fasteners in door trim panel.

(8) Install screw behind inside latch release handle.

(9) Install screw inside arm rest pull cup.

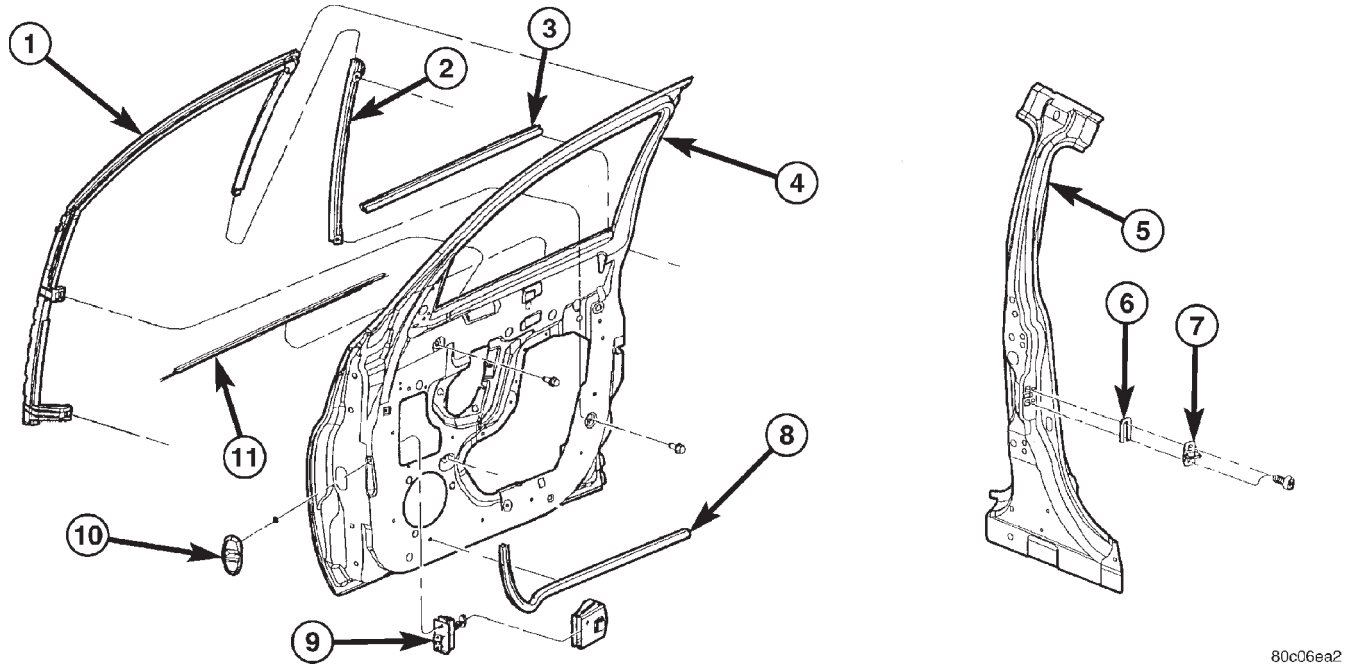

Fig. 41 Front/Rear Sill Secondary Weatherstrip

1 - FRONT DOOR GLASS RUN WEATHERSTRIP
2 - FRONT DOOR GLASS LOWER REAR CHANNEL
3 - FRONT DOOR INNER BELT WEATHERSTRIP
4 - FRONT DOOR
5 - B-PILLAR
6 - FRONT DOOR LATCH STRIKER SPACER
7 - FRONT DOOR LATCH STRIKER
8 - FRONT DOOR SILL WEATHERSTRIP
9 - FRONT DOOR CHECK STRAP AND COVER
10 - FRONT DOOR CHECK STRAP SEAL
11 - BELT WEATHERSTRIP

REMOVAL AND INSTALLATION (Continued)

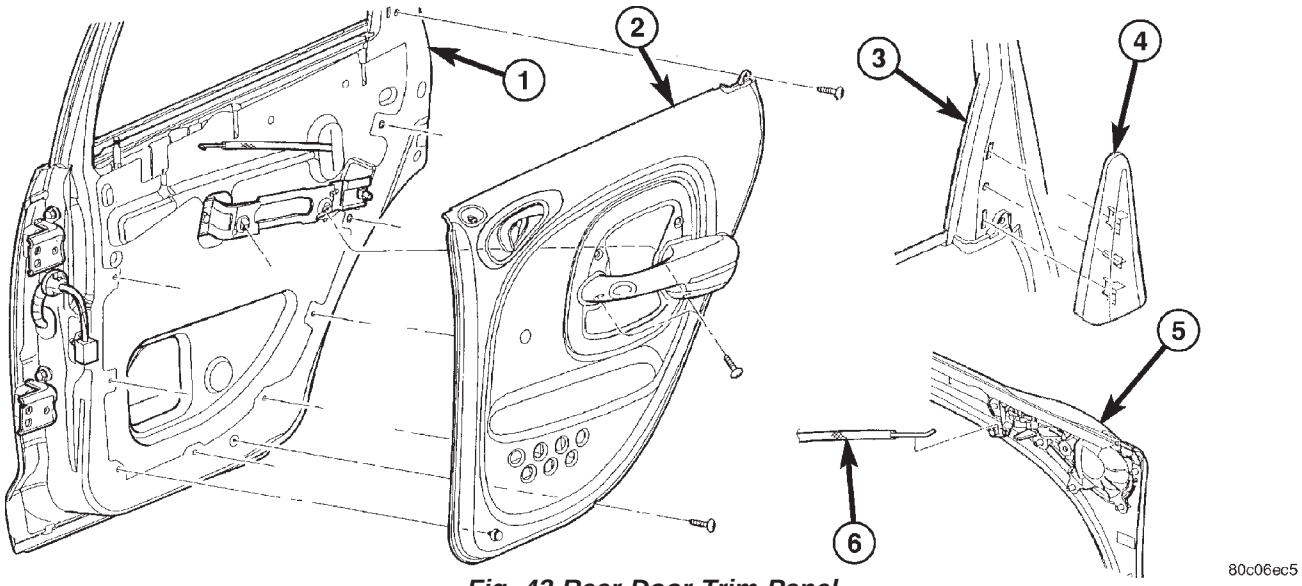

Fig. 42 Rear Door Trim Panel

1 - REAR DOOR
2 - REAR DOOR TRIM PANEL
3 - REAR DOOR REAR EDGE
4 - REAR DOOR FLAG TRIM
5 - REAR DOOR REMOTE HANDLE/BEZEL ASSEMBLY
6 - REAR DOOR LATCH LINK AND SLEEVE

REAR DOOR WATER DAM

REMOVAL

(1) Remove door trim panel.
(2) Remove door speaker, if equipped (Fig. 43).
(3) Remove door trim pull cup mount bracket.
(4) Disconnect clip attaching lock linkage to lock button bell-crank.
(5) Peel water dam away from adhesive around perimeter of inner door panel.

INSTALLATION

(1) Insure that enough adhesive remains to securely retain the water dam. Replace as necessary.
(2) Place the water dam into position and press securely to adhesive making sure to properly route wiring and linkages (Fig. 43).

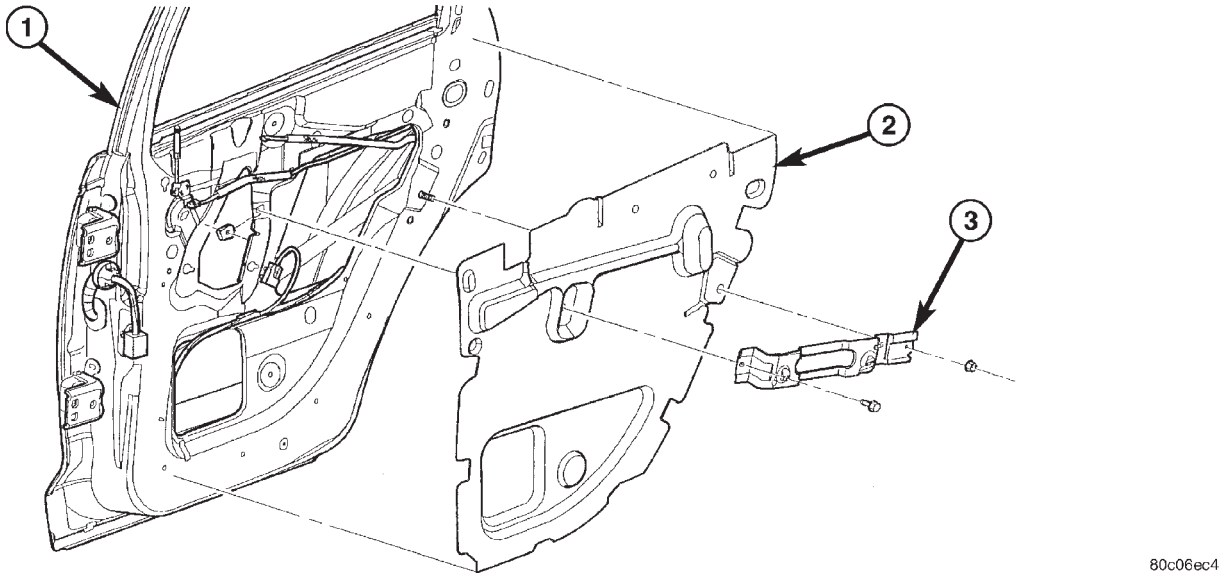

Fig. 43 Water Dam

1 - REAR DOOR
2 - REAR DOOR WATER DAM
3 - REAR DOOR ARMREST TO INNER PANEL ATTACHING BRACKET

REMOVAL AND INSTALLATION (Continued)

(3) Engage clip attaching lock linkage to lock button bell-crank.
(4) Install door trim pull cup mount bracket.
(5) Install door speaker, if equipped.
(6) Install door trim panel.

REAR DOOR OUTSIDE HANDLE

REMOVAL

(1) Remove door trim panel.
(2) Raise door glass.
(3) Disengage clips attaching linkage rods to door latch.
(4) Remove nuts attaching outside handle to door (Fig. 44).
(5) Remove outside handle.

INSTALLATION

(1) Connect lock and latch rods to door handle.
(2) Position door outside handle in opening (Fig. 44).
(3) Tighten attaching nuts.
(4) Connect linkage rods to latch.
(5) Install door trim panel.

REAR DOOR LATCH

REMOVAL

(1) Remove door trim panel.
(2) Raise door glass to full up position.
(3) Remove lower rear run channel.
(4) Disconnect clips attaching linkage rods to door latch.
(5) Remove linkage rods from latch (Fig. 45).
(6) Remove screws attaching latch to door end frame
(7) Remove door latch from vehicle.

INSTALLATION

CAUTION: Do not close door before adjusting the door latch. Door may fail to open.

(1) Position door latch on vehicle and install screws attaching latch to door end frame (Fig. 45).
(2) Connect linkage rods to latch.
(3) Connect lock and latch rods to door latch.
(4) Install lower rear run channel.
(5) Install door trim panel.

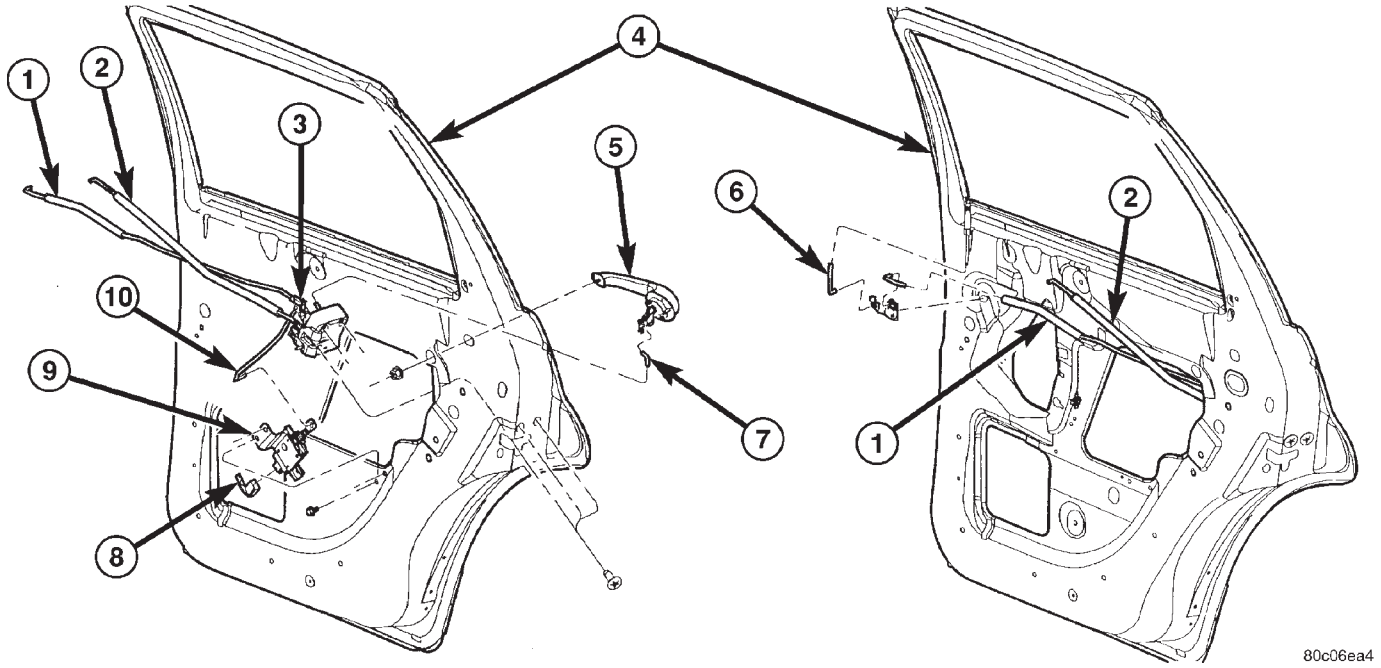

Fig. 44 Rear Door Outside Handle

1 - REAR DOOR BELLCRANK TO LATCH LINK AND SLEEVE
2 - REAR DOOR INSIDE ROD TO LATCH LINK AND SLEEVE
3 - REAR DOOR LOCK LATCH
4 - REAR DOOR
5 - REAR DOOR OUTSIDE HANDLE
6 - REAR DOOR LATCH LINKAGE KNOB AND ROD
7 - REAR DOOR OUTSIDE HANDLE LINK TO LATCH
8 - REAR DOOR WIRE POWER LOCK CONNECTOR
9 - REAR DOOR POWER LOCK MOTOR AND BRACKET
10 - REAR DOOR POWER LOCK ACTUATOR TO LATCH LINK

REMOVAL AND INSTALLATION (Continued)

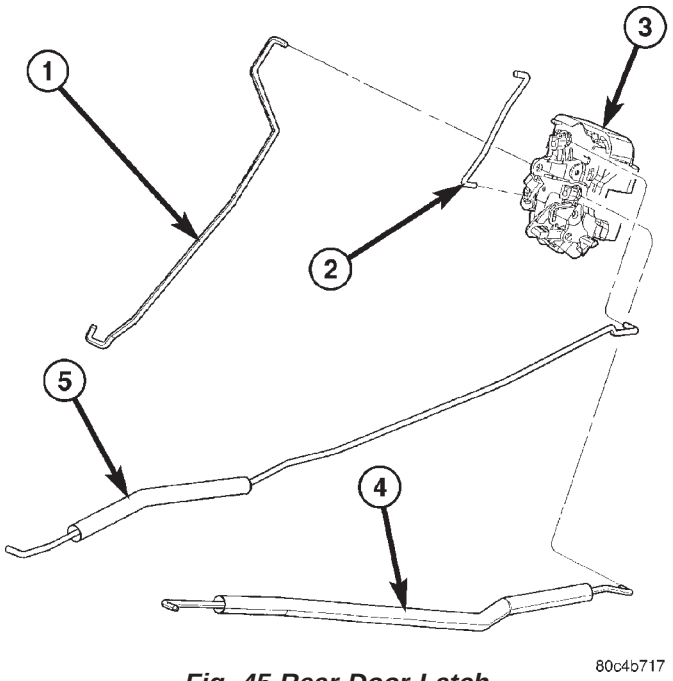

Fig. 45 Rear Door Latch

1 - Rear Door Power Lock Actuator to Latch Link
2 - Rear Door Outside Handle to Latch Link
3 - Rear Door Lock Latch
4 - Rear Door Inside Rod to Latch Link and Sleeve
5 - Rear Door Bellcrank to Latch Link and Sleeve

REAR DOOR LATCH STRIKER

REMOVAL

(1) Mark outline of door latch striker on B-pillar to aid installation (Fig. 46).

(2) Remove screws attaching door latch striker to B-pillar.

(3) Remove door latch striker from vehicle.

INSTALLATION

(1) Install door latch striker from vehicle (Fig. 46).

(2) Install screws attaching door latch striker to B-pillar.

(3) Align marked outline of door latch striker on B-pillar to aid installation.

REAR DOOR GLASS

REMOVAL

(1) Remove door trim panel and inner belt weatherstrip.

(2) Lower the window to 50 mm (2 ins.) from bottom of travel.

(3) Loosen bolts attaching rear lower run channel to inner door panel (Fig. 47).

(4) Remove rear run channels from door.

(5) Loosen screws attaching window regulator to glass.

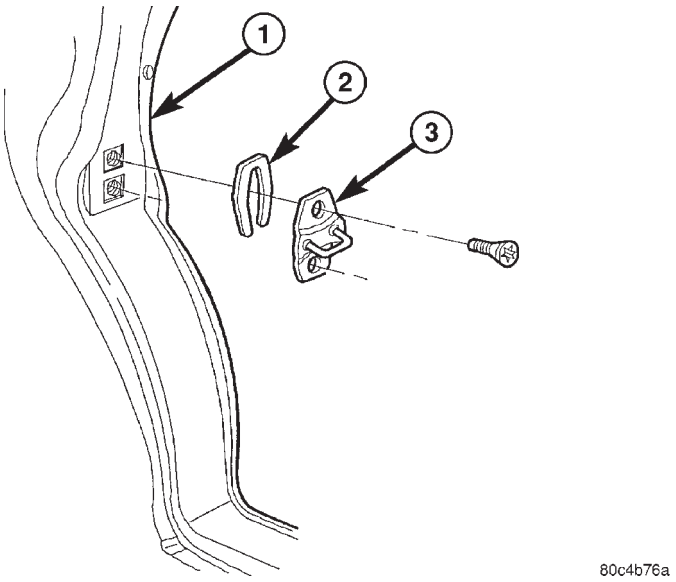

Fig. 46 Rear Door Latch Striker

1 - C-Pillar
2 - Spacer
3 - Rear Door Striker

(6) Remove glass.

(7) Lift door glass upward out of the opening at the top of door.

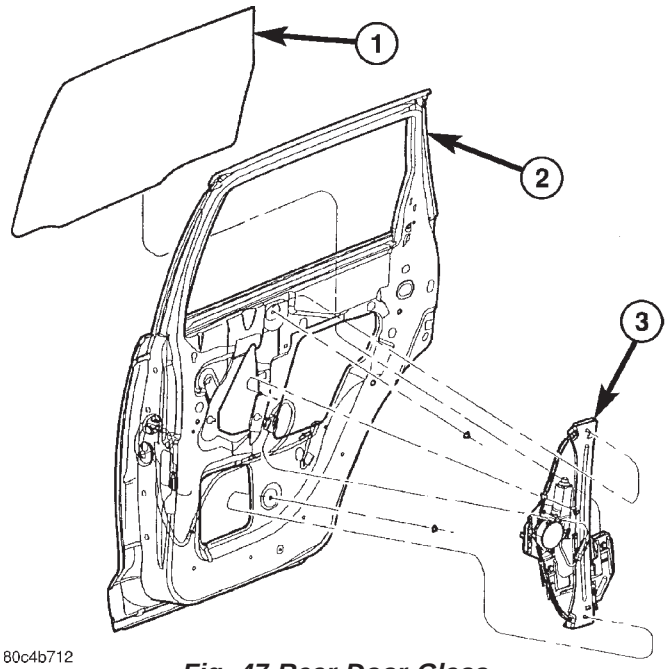

Fig. 47 Rear Door Glass

1 - REAR DOOR WINDOW GLASS
2 - REAR DOOR
3 - REAR DOOR WINDOW POWER REGULATOR

INSTALLATION

(1) Lower door glass through opening in top of door and into position in the window regulator (Fig. 47).

REMOVAL AND INSTALLATION (Continued)

(2) Raise window glass and regulator to full up position.

(3) Tighten screws attaching window regulator to glass.

(4) Install lower belt brackets.

(5) Install inner door belt door trim panel and inner belt weatherstrip.

(6) Install outer belt weatherstrip.

(7) Operate window and check for interference. Adjust glass as necessary.

REAR DOOR WINDOW REGULATOR

REMOVAL

(1) Remove door trim panel and watershield.

(2) Remove door glass from regulator channel. Secure glass in the door frame in the “UP” position.

(3) Remove fasteners attaching window regulator channel and crank motor to door panel (Fig. 47).

(4) Disengage wiring at clip.

(5) Disengage regulator from door panel, and motor housing.

(6) Slide regulator rearward and rotate forward end of channel through access hole in door panel.

(7) Remove window regulator from door through access hole in inner panel.

INSTALLATION

(1) Position window regulator and motor housing on door panel through access hole in door panel (Fig. 47).

(2) Install fasteners attaching window regulator to door panel.

(3) Position glass to regulator roller channel.

(4) Tighten fasteners attaching door glass to lift plate.

(5) Engage electrical wiring.

(6) Position watershield, and install door trim panel.

REAR DOOR GLASS RUN WEATHERSTRIP

REMOVAL

(1) Remove door trim panel, water shield as necessary.

(2) Remove door glass.

(3) Pull weatherstrip from flange.

(4) Pull run weatherstrip from window frame channel.

INSTALLATION

(1) Clean butyl material from door flange area.

(2) Place door run weatherstrip in position on window frame channel corners first (Fig. 48).

(3) Push door run weatherstrip into window frame channel.

(4) Install door glass.

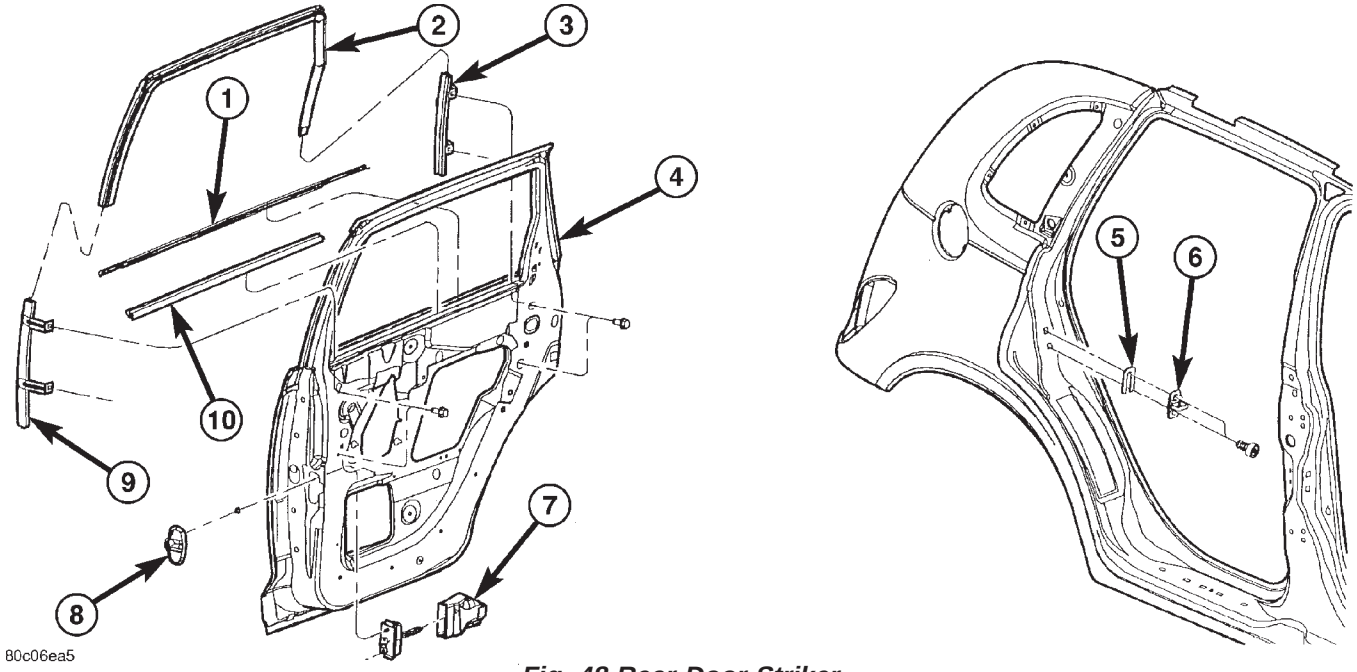

Fig. 48 Rear Door Striker

1 - OUTER BELT WEATHERSTRIP
2 - REAR DOOR GLASS RUN WEATHERSTRIP
3 - REAR DOOR LOWER CHANNEL
4 - REAR DOOR
5 - REAR DOOR LATCH STRIKER SPACER
6 - REAR DOOR LATCH STRIKER
7 - REAR DOOR CHECK STRAP AND COVER
8 - REAR DOOR CHECK STRAP SEAL
9 - REAR DOOR GLASS LOWER CHANNEL - FRONT
10 - INNER BELT WEATHERSTRIP

REMOVAL AND INSTALLATION (Continued)

(5) Install pull cup support bracket, water dam, and door trim panel.

REAR DOOR CHECK STRAP

REMOVAL

(1) Raise glass to full up position.
(2) Remove door trim panel.
(3) Remove bolts attaching check strap to hinge pillar (Fig. 49).
(4) Remove check strap seal from door end frame.
(5) Remove bolts attaching check strap to door end frame.
(6) Remove check strap from vehicle.

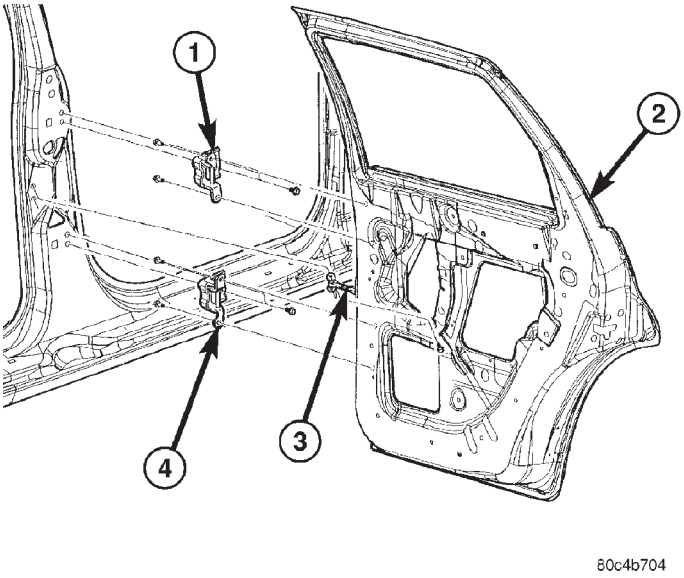

Fig. 49 Rear Door Check Strap

1 - REAR DOOR UPPER HINGE
2 - REAR DOOR
3 - REAR DOOR CHECK STRAP
4 - REAR DOOR LOWER HINGE

INSTALLATION

CAUTION: Do not close door before adjusting the door latch. Door may fail to open.

(1) Position door check strap on door.
(2) Install check strap attaching bolts to the door end frame (Fig. 49).
(3) Install check strap seal. If seal is damaged or worn replace seal.
(4) Install check strap attaching bolts to the hinge pillar.
(5) Install water shield and door trim panel.

REAR DOOR

REMOVAL

(1) Open door and support on a suitable lifting device.
(2) Disconnect the wire connector at the hinge pillar.
(3) Remove bolts attaching door check strap to B-pillar.
(4) Mark door hinges for reinstallation.
(5) Remove bolts attaching lower hinge to door (Fig. 49).
(6) Remove bolts attaching upper hinge to door.

INSTALLATION

(1) Install bolts to the upper hinge to door (Fig. 49).
(2) Install bolts to the lower hinge to door.
(3) Connect the wire connector at the B-pillar.
(4) Remove lifting device.
(5) Install door check strap bolts.
(6) Adjust door as necessary.

REAR DOOR HINGE

NOTE: If both hinges on one door are to be replaced, remove and install one hinge completely prior to beginning the second hinge.

REMOVAL

(1) With rear door closed apply tape to secure door into body.
(2) Open front door.
(3) Mark position of hinge on both the door end frame and lower B-pillar to ease installation.
(4) Remove B-pillar lower trim panel.
(5) Remove bolts attaching hinge to door end frame (Fig. 49).
(6) Remove bolts attaching hinge to lower B-pillar.
(7) Remove door hinge from vehicle.

INSTALLATION

NOTE: Do not grease door hinges.

(1) If necessary, paint new door hinge prior to installation.
(2) Position door hinge on vehicle (Fig. 49).
(3) Loosely install bolts attaching hinge to lower B-pillar.
(4) Loosely install bolts attaching hinge to door end frame.
(5) Align hinge to marks made previously and tighten all bolts.
(6) Verify door fit and operation. Adjust door hinge for proper door alignment, if necessary.

REMOVAL AND INSTALLATION (Continued)

(7) Install B-pillar lower trim panel.

FUEL FILL DOOR

REMOVAL

(1) Open the fuel filler door.

(2) Remove the screws attaching the door to the quarter panel (Fig. 50).

(3) Remove the door from the panel.

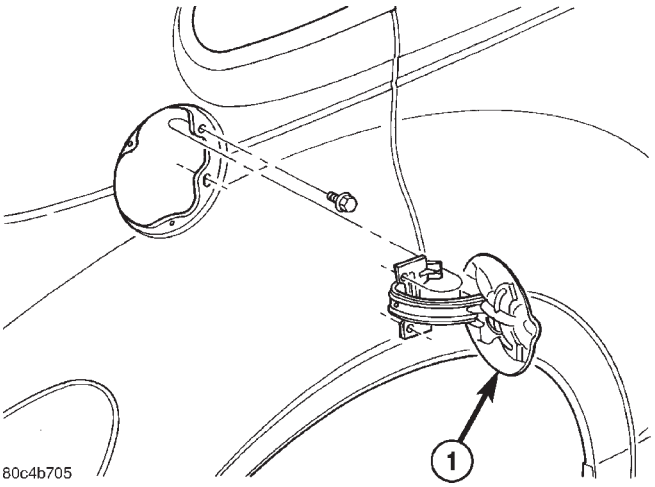

Fig. 50 Fuel Filler Door

1 - FUEL FILLER DOOR

INSTALLATION

(1) Position the fuel filler door on the quarter panel with the screw holes aligned (Fig. 50).

(2) Install the screws attaching the fuel filler door to the quarter panel.

LIFTGATE

REMOVAL

(1) Release liftgate latch and open liftgate.

(2) Remove screws attaching liftgate wire connector to rear header.

(3) Disconnect liftgate wire harness from body wire harness.

(4) Remove liftgate upper frame molding.

(5) Disconnect rear window washer hose from spray nozzle.

(6) Support liftgate on a suitable lifting device.

(7) Remove screws attaching support cylinders to liftgate.

(8) Remove bolts attaching liftgate hinge to roof header (Fig. 51).

(9) With assistance, remove liftgate from vehicle.

INSTALLATION

(1) With assistance, place liftgate in position on vehicle.

(2) Install bolts attaching liftgate hinge to roof header. Tighten bolts to 33 N·m (24 ft. lbs.) torque (Fig. 51).

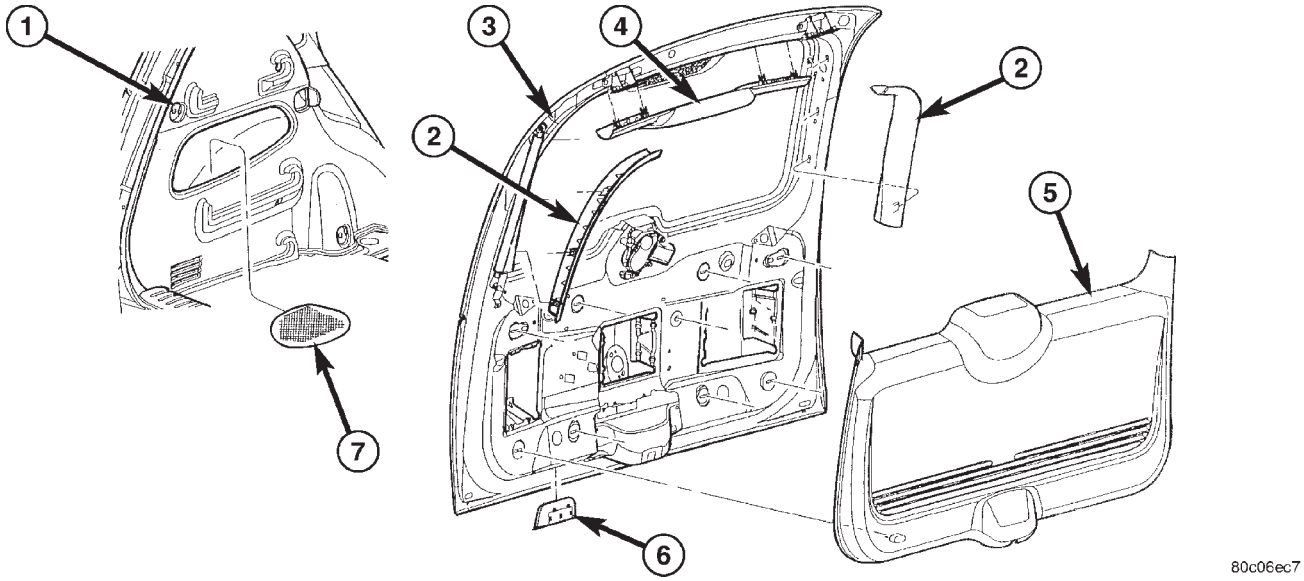

Fig. 51 Liftgate

1 - EDGE OF LIFTGATE TROUGH
2 - LIFTGATE HALO
3 - LIFTGATE
4 - CHMSL COVER TRIM
5 - LIFTGATE TRIM PANEL
6 - LIFTGATE PULL CUP
7 - REAR CONVENIENCE BEZEL

REMOVAL AND INSTALLATION (Continued)

(3) Install screws attaching support cylinders to liftgate. Tighten bolts to 28 N·m (21 ft. lbs.) torque.

(4) Remove lifting device from under liftgate.

(5) Connect liftgate wire harness into body wire harness.

(6) Install screws attaching wire connector to rear header.

(7) Connect rear window washer hose onto spray nozzle.

(8) Install liftgate upper frame molding.

(9) Verify liftgate alignment. The liftgate should have a gap to adjacent panels and fit flush across the gaps. The gap is;

- 7 mm (0.280 in.) to the fascia,
- 6 mm (0.240 in.) to the roof,
- 4 mm (0.160 in.) to the aperture.

LIFTGATE HINGE

REMOVAL

(1) Release liftgate latch and open liftgate.

(2) Support liftgate on a suitable lifting device in the full open position.

(3) Apply several layers of duct tape on the outside of to roof across the gap to the lift gate to hold the liftgate in position.

(4) Remove bolts attaching liftgate hinge to roof header.

(5) Remove bolts attaching hinge to liftgate (Fig. 52).

(6) Remove hinge from vehicle.

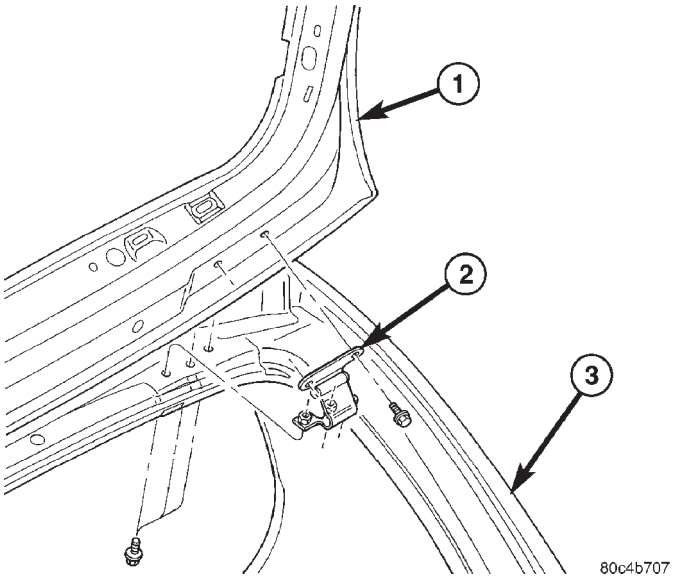

Fig. 52 Liftgate Hinge

1 - Liftgate
2 - Liftgate Hinge
3 - Liftgate Opening

INSTALLATION

(1) If necessary, paint replacement hinge before installation.

(2) Place hinge in position on vehicle (Fig. 52).

(3) Align hinge to marks on liftgate.

(4) Install bolts attaching hinge to liftgate. Tighten bolts to 33 N·m (24 ft. lbs.) torque.

(5) Align hinge to marks on roof header.

(6) Install bolts attaching liftgate hinge to roof header. Tighten outer two bolts to 33 N·m (24 ft. lbs.) torque. The sheet medal screw at center 12 N·m (105 in. lbs.)

(7) Remove duct tape from roof and liftgate.

(8) Verify liftgate alignment. Refer to Liftgate Remove and Installation for proper gap measurements.

LIFTGATE PROP ASSEMBLY

REMOVAL

(1) Release liftgate latch and open liftgate.

(2) Support liftgate on a suitable lifting device in the full open position.

(3) Pull liftgate opening weatherstrip from D-pillar flange next to prop assembly end pivot.

(4) Remove bolt attaching end pivot to D-pillar (Fig. 53).

(5) Remove bolt attaching prop assembly to liftgate.

(6) Remove prop assembly from vehicle.

INSTALLATION

Ensure that the cylinder end is attached to the D-pillar and the shaft end is attached to the liftgate (Fig. 53).

(1) Place prop assembly position.

(2) Install bolt attaching prop assembly to liftgate.

(3) Install bolt attaching end pivot to D-pillar. Tighten bolts to 28 N·m (21 ft. lbs.) torque.

(4) Install liftgate opening weatherstrip to D-pillar flange next to prop assembly end pivot.

(5) Close liftgate. Check liftgate operation.

LIFTGATE LATCH

REMOVAL

(1) Remove liftgate trim panel.

(2) Disengage outside handle link from clip on latch.

(3) Disconnect wire connector from liftgate ajar switch (Fig. 54).

(4) Remove screws attaching latch to liftgate.

(5) Remove latch from vehicle.

INSTALLATION

(1) Place latch in position on vehicle.

REMOVAL AND INSTALLATION (Continued)

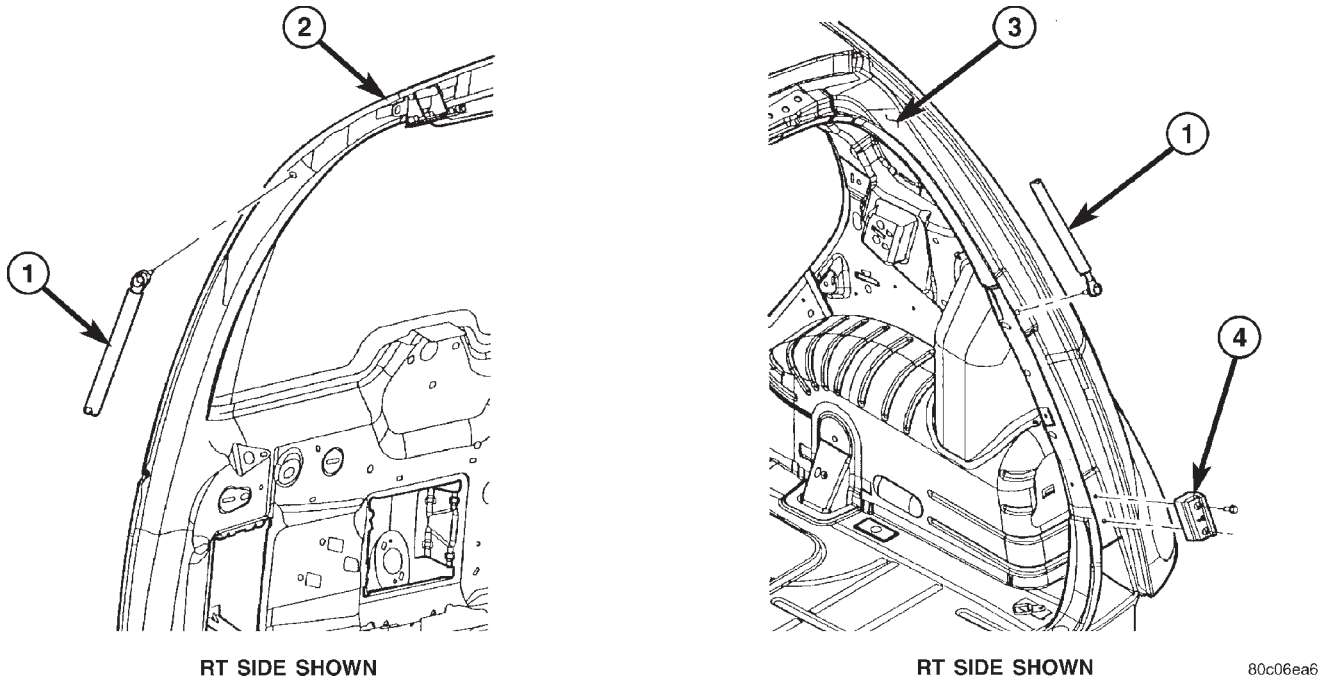

Fig. 53 Liftgate Prop Assembly

1 - LIFTGATE GAS PROP ROD
2 - LIFTGATE ASSEMBLY
3 - LIFTGATE SIDE DRAIN TROUGH
4 - DRAIN TROUGH OUTER STABLE BUMPER

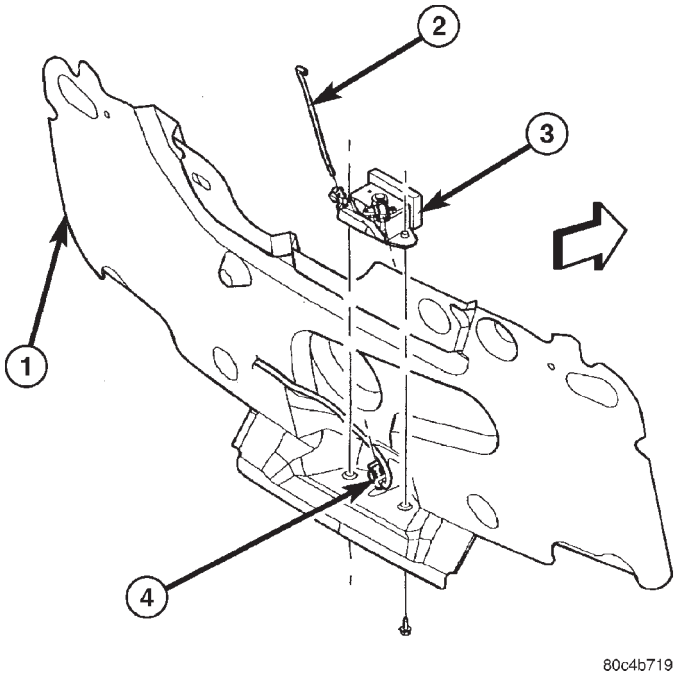

Fig. 54 Liftgate Latch

1 - WATER SHIELD LIFTGATE INNER PANEL
2 - CONTROL ASSEMBLY TO LIFTGATE LATCH LINK
3 - LIFTGATE LATCH
4 - WIRING CONNECTOR

(2) Install screws attaching latch to liftgate. Tighten to 16 N·m (12 ft. lbs.) torque (Fig. 54).

(3) Pull downward on outside handle link and engage link to clip on latch.

(4) Connect wire connector to liftgate ajar switch.

(5) Verify liftgate fit and operation. Adjust as necessary.

(6) Install liftgate trim panel.

LIFTGATE LATCH STRIKER

REMOVAL

(1) Open liftgate.

(2) Mark outline of striker on sill to aid installation.

(3) Remove screws attaching striker to sill (Fig. 55).

(4) Remove striker from vehicle.

INSTALLATION

(1) Place striker in position on vehicle (Fig. 55).

(2) Align striker to outline mark on sill.

(3) Install screws attaching striker to sill. Tighten screws to 28 N·m (21 ft. lbs.) torque.

(4) Verify liftgate alignment and operation.

REMOVAL AND INSTALLATION (Continued)

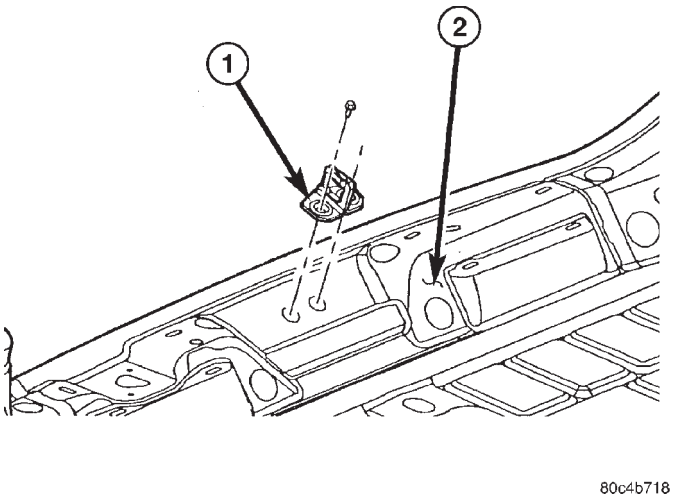

Fig. 55 Liftgate Latch Striker

1 - LIFTGATE LATCH STRIKER
2 - LIFTGATE OPENING LOWER CENTER PANEL

LIFTGATE LOCK CYLINDER

REMOVAL

NOTE: Do not remove E-clip.

(1) Remove outside liftgate handle.
(2) Remove lock cylinder clip from handle (Fig. 56).
(3) Remove lock cylinder and arm from handle.

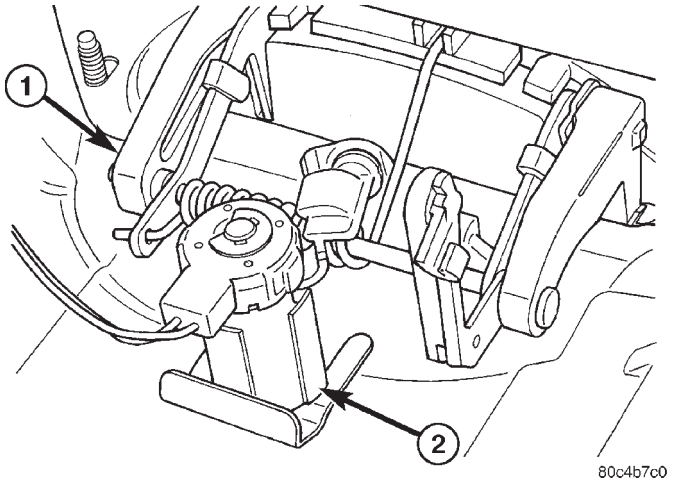

Fig. 56 Lock Cylinder Removal

1 - LIFTGATE HANDLE
2 - LIFTGATE LOCK CYLINDER

INSTALLATION

(1) Install lock cylinder clip into liftgate (Fig. 56).
(2) Push lock cylinder into handle until clip engages groove in lock cylinder with an audible click.
(3) Install outside liftgate handle.
(4) Verify lock cylinder operation.

LIFTGATE WEATHERSTRIP

REMOVAL

(1) Open liftgate.
(2) Remove weatherstrip, pull outward on the weatherstrip. (Fig. 57)
(3) Remove outer belt weatherstrip from vehicle.

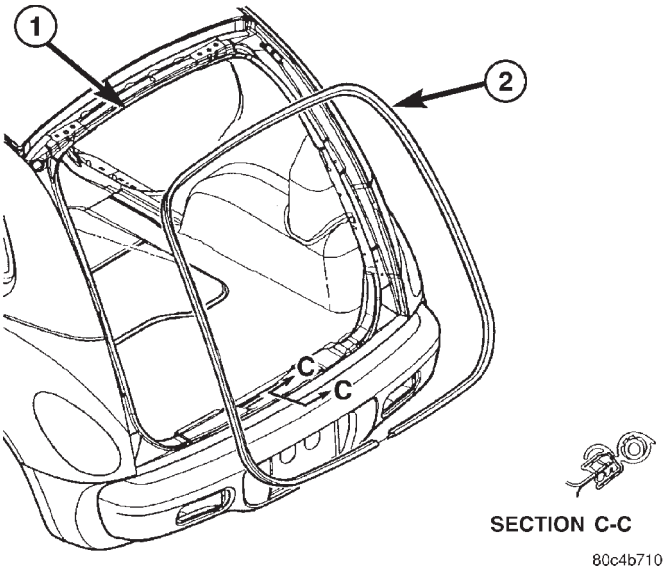

Fig. 57 Door Outer Belt Weatherstrip

1 - LIFTGATE OPENING
2 - LIFTGATE OPENING WEATHERSTRIP

INSTALLATION

(1) Starting at bottom center, press weatherstrip into position (Fig. 57).
(2) Open and close liftgate and check for interference.

LIFTGATE CHMSL ACCESS PANEL

REMOVAL

(1) Using a trim stick (C-4755), disengage clips holding CHMSL cover trim to liftgate (Fig. 58).
(2) Remove CHMSL cover trim from vehicle.

INSTALLATION

(1) Place CHMSL cover trim in position on vehicle (Fig. 58).
(2) Press tabs into position to hold CHMSL cover trim to liftgate.

LIFTGATE CONTROL ASSEMBLY INNER PANEL

REMOVAL

(1) Remove liftgate trim panel.
(2) Disconnect linkage (Fig. 59).
(3) Remove fasteners attaching control assembly inner panel.

REMOVAL AND INSTALLATION (Continued)

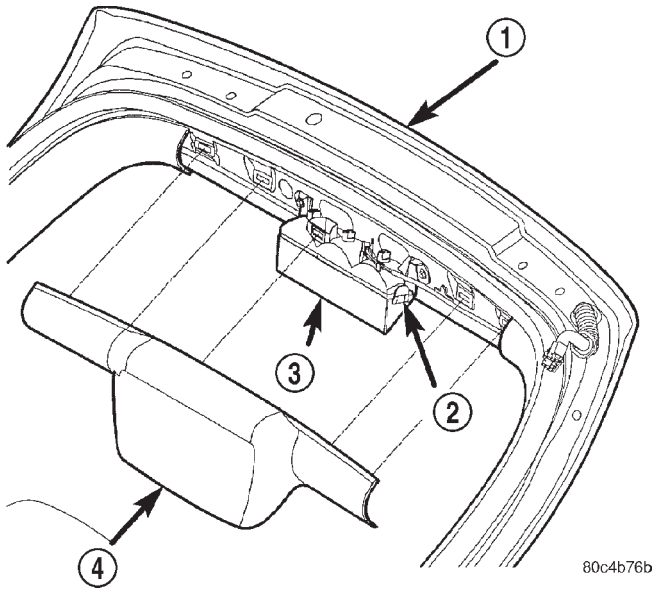

Fig. 58 CHMSL Cover Trim

1 – LIFTGATE
2 – SNAP
3 – CHMSL LAMP
4 – CHMSL COVER

(4) Remove control assembly inner panel from vehicle.

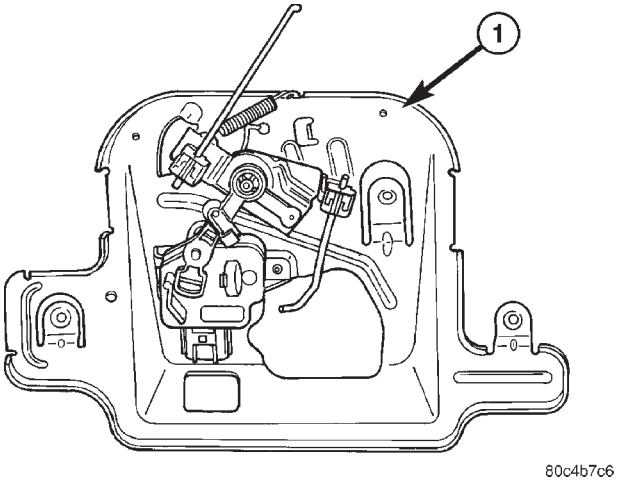

Fig. 59 Liftgate Control Assembly Inner Panel.

1 - LIFTGATE CONTROL ASSEMBLY INNER PANEL

INSTALLATION

(1) Place into position control assembly inner panel (Fig. 59).

(2) Tighten control assembly inner panel fasteners.

(3) Verify liftgate operation.

LIFTGATE OUTSIDE HANDLE

REMOVAL

(1) Remove liftgate trim (Fig. 61).

(2) Disconnect latch linkage and electrical connectors from liftgate control assembly (Fig. 60).

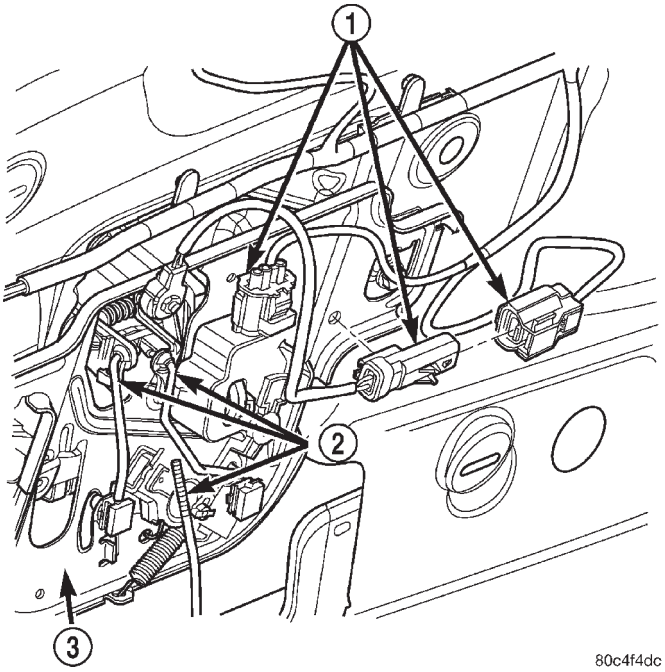

Fig. 60 linkage and Electrical Connectors Removal / Installation

1 – ELECTRICAL WIRING CONNECTORS
2 – LINKAGE
3 – CONTROL ASSEMBLY

(3) Remove liftgate control assembly from liftgate.

(4) Remove fasteners attaching liftgate outside handle.

(5) Using a heat gun, apply heat to the wings to loosen the double sided tape for removal of the handle.

(6) Clean surface of any residua.

INSTALLATION

(1) Place liftgate outside handle into position. Remove protected cover from the two side tape (Fig. 61).

(2) Install handle fasteners. Tighten two nuts to 7 N·m (60 in. lbs.).

(3) Install liftgate control assembly onto liftgate.

(4) Connect latch linkages and electrical connectors (Fig. 60).

(5) Install liftgate trim panel.

REMOVAL AND INSTALLATION (Continued)

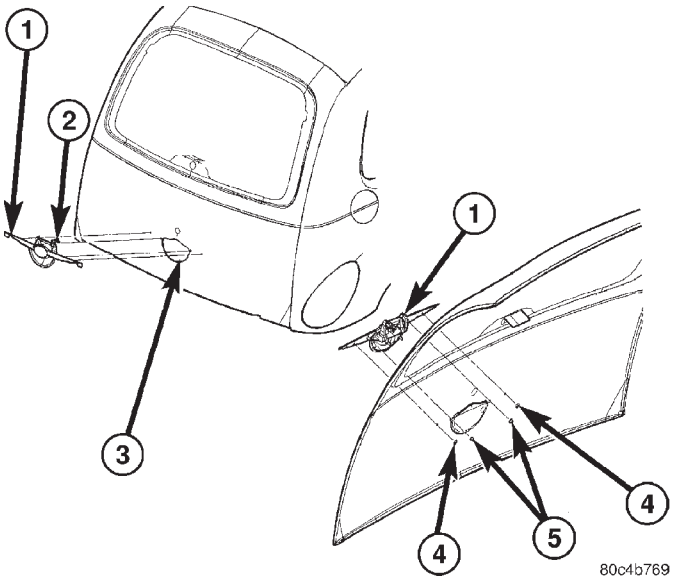

Fig. 61 Liftgate Outside Handle

1 - Liftgate Outside Handle
2 - Pull Lever Arm
3 - Liftgate
4 - Attaching Push Nuts
5 - Attaching Nuts

A-PILLAR TRIM

REMOVAL

(1) Disengage clips attaching trim to A-pillar.
(2) Remove A-pillar trim from vehicle (Fig. 62).

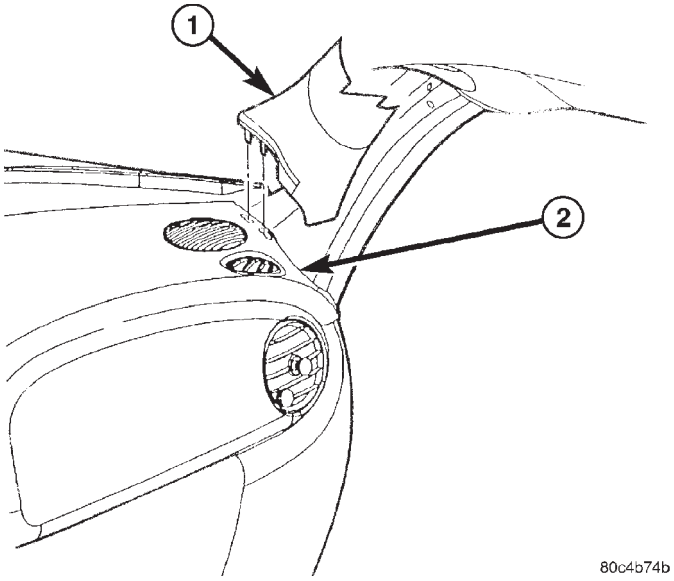

Fig. 62 A-pillar Trim

1 - WINDSHIELD (A-PILLAR) SIDE GARNISH TRIM
2 - INSTRUMENT PANEL TOP COVER

INSTALLATION

(1) Position A-pillar trim panel to A-pillar (Fig. 62).
(2) Align locating pins on backside of trim panel to mating holes in A-pillar.
(3) Push clips on trim panel into slots in A-pillar.

DOOR SILL TRIM

REMOVAL

(1) Open door to gain access to sill trim.
(2) Disengage clips attaching sill trim to door sill and door opening flange.
(3) Remove door sill trim from vehicle (Fig. 63).

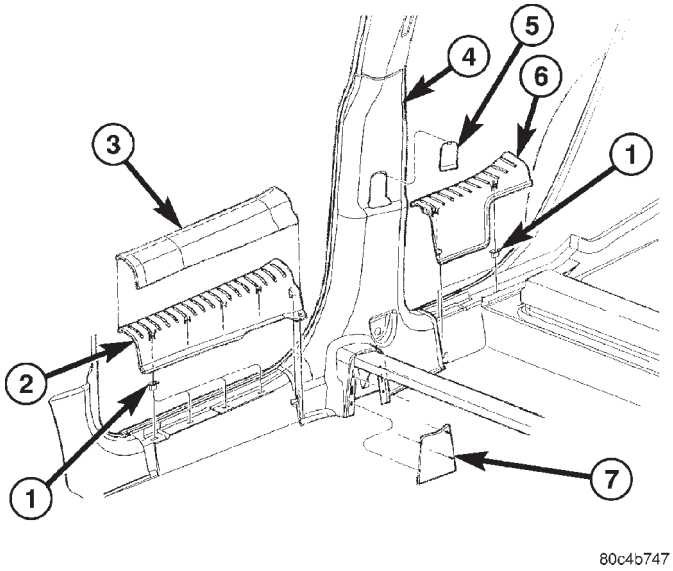

Fig. 63 Door Sill Trim

1 - SILL SCUFF PLATE ATTACHING NUT
2 - FRONT DOOR SILL SCUFF PLATE
3 - FRONT SILL SCUFF PROTECTOR - RHD
4 - B-PILLAR
5 - B-PILLAR SEAT BELT ACCESS COVER
6 - REAR DOOR SILL SCUFF PLATE
7 - CLOSE OUT COVER

INSTALLATION

(1) Position door sill trim on door sill (Fig. 63).
(2) Align locating pins on backside of trim panel to holes in door sill.
(3) Engage clips on trim panel into slots in door sill.
(4) Engage clips on trim panel onto door opening flange.
(5) Press downward on trim panel to fully engage all clips.

REMOVAL AND INSTALLATION (Continued)

SIDE COWL TRIM

REMOVAL

(1) Disengage clips attaching cowl trim to cowl side panel.

(2) Remove cowl trim from vehicle (Fig. 64).

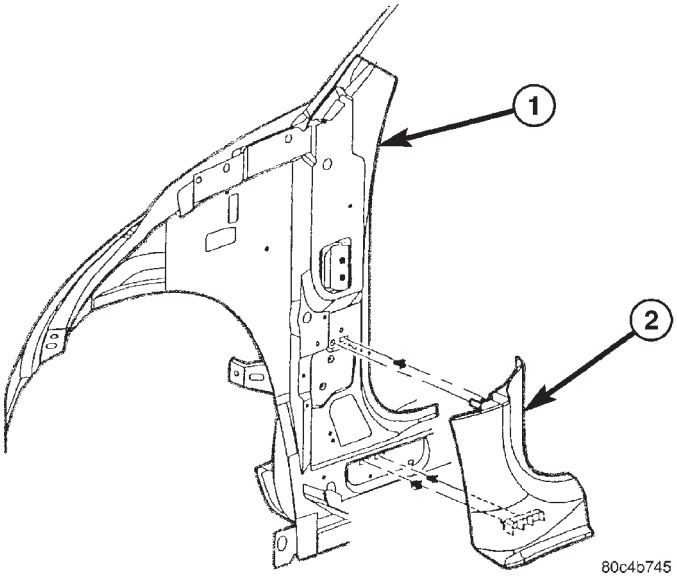

Fig. 64 Side Cowl Trim

1 - COWL ASSEMBLY
2 - COWL SIDE TRIM PANEL

INSTALLATION

(1) Position cowl trim panel to inner cowl panel (Fig. 64).

(2) Align locating pins on backside of cowl trim panel to mating holes in inner cowl panel.

(3) Push clips on trim panel into slots in inner cowl panel.

B-PILLAR TRIM

REMOVAL

(1) Remove shoulder belt height control knob.

(2) Remove bolt attaching turning loop to belt adjuster (Fig. 65).

(3) Remove bolt attaching lower seat belt anchor to floor pan kick- up.

(4) Remove upper B-pillar trim.

(5) Remove access cover from B-pillar trim.

(6) Disengage clips attaching trim to B-pillar.

(7) Feed seat belt turning loop and seat belt through trim panel.

(8) Remove lower B-pillar trim from vehicle.

INSTALLATION

NOTE: Tighten all seat belt bolts to 40 N·m (40 ft. lbs.) torque.

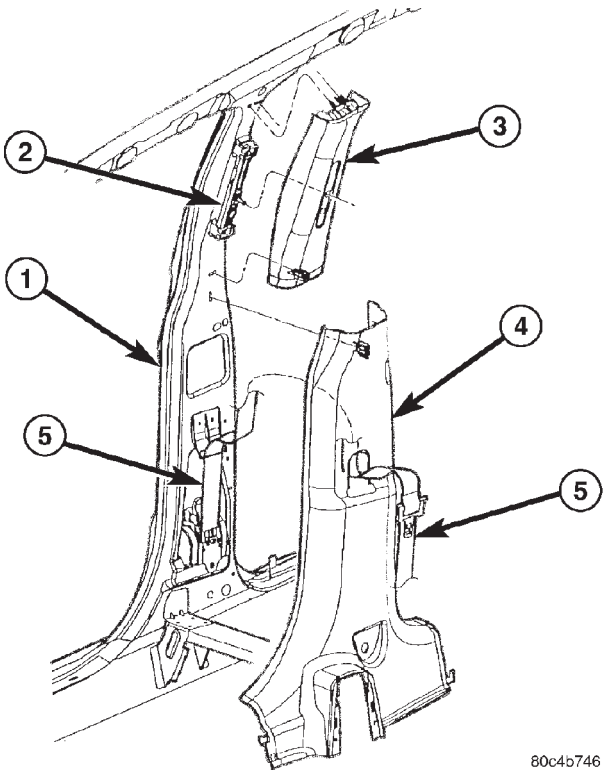

Fig. 65 B-pillar Trim

1 - B-PILLAR
2 - SEAT BELT ADJUSTER
3 - B-PILLAR UPPER TRIM COVER
4 - B-PILLAR LOWER TRIM COVER
5 - SEAT BELT ASSEMBLY

(1) Position lower B-pillar trim panel near B-pillar (Fig. 65).

(2) Feed seat belt turning loop and seat belt through trim panel.

(3) Align locating pins on backside of trim panel to mating holes in B-pillar.

(4) Push clips on trim panel into slots in B-pillar.

(5) Install access cover to B-pillar trim.

(6) Install bolt attaching turning loop to belt adjuster.

(7) Move height adjuster to the lowest position.

(8) Install upper B-pillar trim.

(9) Install shoulder belt height control knob.

(10) Install bolt attaching lower seat belt anchor to floor pan kick-up.

UPPER C-PILLAR TRIM PANEL

REMOVAL

(1) Disengage clips attaching trim to C-pillar (Fig. 66).

(2) Remove upper trim panel from vehicle.

REMOVAL AND INSTALLATION (Continued)

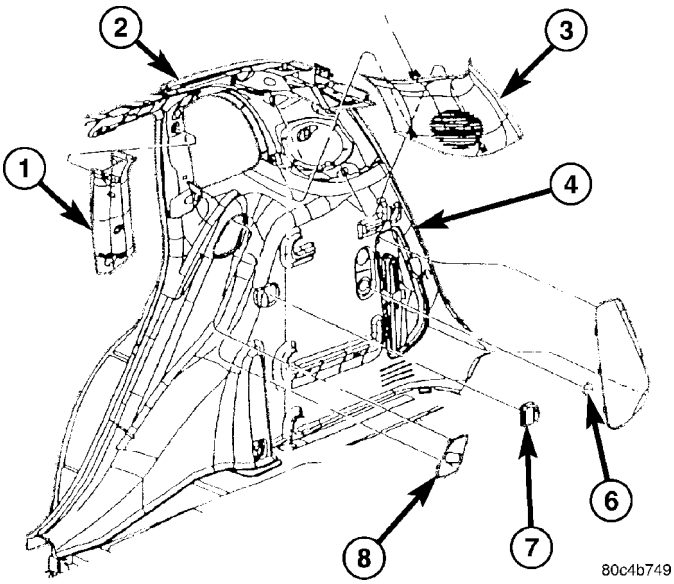

Fig. 66 Upper C-Pillar Trim Panel

1 - C-PILLAR UPPER TRIM PANEL
2 - REAR QUARTER PANEL
3 - D-PILLAR TRIM PANEL
4 - QUARTER TRIM LOWER PANEL
5 - JACK STOWAGE ACCESS DOOR
6 - QUARTER TRIM PANEL LOWER PLUG
7 - VERTICAL BUMPER

INSTALLATION

(1) Place C-pillar trim panel in position (Fig. 66).

(2) Push clips on trim panel into slots in upper C-pillar panel.

UPPER D-PILLAR TRIM PANEL

REMOVAL

(1) Disengage clips attaching trim to D-pillar (Fig. 66).

(2) Remove upper trim panel from vehicle.

INSTALLATION

(1) Place D-pillar trim panel in position (Fig. 66).

(2) Push clips on trim panel into slots in upper D-pillar panel.

LOWER QUARTER TRIM PANEL

REMOVAL

(1) Remove upper quarter trim panel (Fig. 67).

(2) Disengage clips attaching trim to lower quarter trim panel.

(3) Remove cargo tie down trim panel.

(4) Remove lower quarter trim from vehicle.

INSTALLATION

(1) Position lower quarter trim panel to vehicle (Fig. 67).

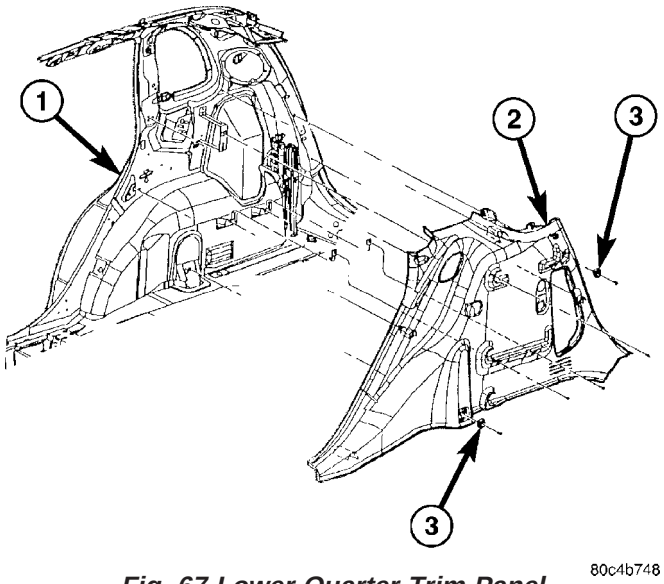

Fig. 67 Lower Quarter Trim Panel

1 - REAR QUARTER PANEL
2 - REAR QUARTER TRIM PANEL
3 - CARGO TIE DOWN QUARTER TRIM LOWER LOOP

(2) Align locating pins on backside of trim panel to mating holes in inner quarter panel.

(3) Press clips on trim panel into slots in inner quarter panel.

(4) Install upper quarter trim panel.

FLOOR CONSOLE

REMOVAL

(1) Block the tire and wheels so the vehicle does not move once the vehicle parking brake lever is released.

(2) Remove shift lever knob, if vehicle is equipped with a manual transmission pull upward to remove. Automatic transmission shift lever knob, loosen set screw in the knob and pull off lever.

(3) Place the parking brake lever in its full “off” position.

(4) Remove screws attaching console to floor bracket (Fig. 68).

(5) Remove the rear window switch panel from the console.

(6) Through the switch panel opening, grasp a parking brake cable or equalizer and pull back approximately one inch.

(7) While holding the cable or equalizer, pull the parking brake handle to its full upright position.

(8) Remove console from vehicle.

INSTALLATION

(1) Place floor console into position in vehicle (Fig. 68).

(2) Install the rear window switch panel.

REMOVAL AND INSTALLATION (Continued)

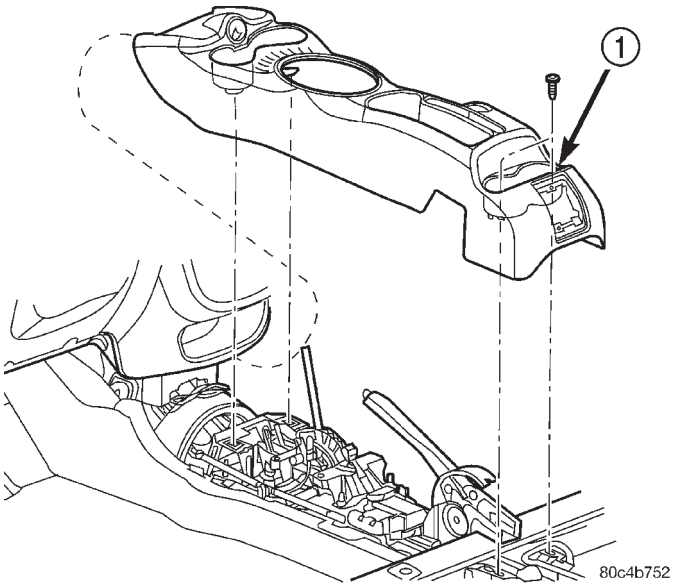

Fig. 68 Floor Console Typical

1 – CENTER CONSOLE

(3) Install screws attaching console to floor brackets.
(4) Install screw cover plugs.
(5) Install shift lever knob, if vehicle is equipped with a manual transmission.
(6) Release parking brake.

FRONT SEAT BELT BUCKLE

WARNING: FRONT SEAT BELT ASSEMBLIES MUST BE REPLACED AFTER A COLLISION.

REMOVAL

(1) Remove bolt attaching seat belt buckle from seat anchor.
(2) Remove seat belt buckle from seat.

INSTALLATION

(1) Place seat belt buckle in position on seat anchor.
(2) Install bolt attaching seat belt buckle to seat anchor. Tighten seat belt anchor bolt to 40 N·m (30 ft. lbs.) torque.

FRONT SEAT BELT RETRACTOR

WARNING: FRONT SEAT BELT ASSEMBLIES MUST BE REPLACED AFTER A COLLISION.

REMOVAL

(1) Remove shoulder belt height control knob.
(2) Remove bolt attaching turning loop to belt adjuster (Fig. 65).
(3) Remove upper B-pillar trim.
(4) Remove access cover from B-pillar trim.
(5) Disengage clips attaching trim to B-pillar.
(6) Feed seat belt turning loop and seat belt through trim panel.
(7) Remove lower B-pillar trim from vehicle.
(8) Remove front seat belt retractor.

INSTALLATION

NOTE: Tighten all seat belt bolts to 40 N·m (40 ft. lbs.) torque.

(1) Place front seat belt retractor into position.
(2) Position lower B-pillar trim panel near B-pillar (Fig. 65).
(3) Feed seat belt turning loop and seat belt through trim panel.
(4) Align locating pins on backside of trim panel to mating holes in B-pillar.
(5) Push clips on trim panel into slots in B-pillar.
(6) Install access cover to B-pillar trim.
(7) Install bolt attaching turning loop to belt adjuster.
(8) Move height adjuster to the lowest position.
(9) Install upper B-pillar trim.
(10) Install shoulder belt height control knob.
(11) Install bolt attaching lower seat belt anchor to floor pan kick-up.

FRONT SHOULDER BELT ADJUSTER

WARNING: FRONT SEAT BELT ASSEMBLIES MUST BE REPLACED AFTER A COLLISION.

REMOVAL

(1) Remove B-pillar trim.
(2) Remove the two bolts attaching shoulder belt adjuster to B-pillar (Fig. 69).
(3) Remove shoulder belt adjuster from vehicle.

INSTALLATION

NOTE: Front seat belt adjuster must be in the lowest position when Installing adjuster knob.

(1) Place into position the shoulder belt adjuster.
(2) Install bolts attaching shoulder belt adjuster to B-pillar. Tighten all seat belt bolts to 40 N·m (30 ft. lbs.) torque.
(3) Install B-pillar trim.

REMOVAL AND INSTALLATION (Continued)

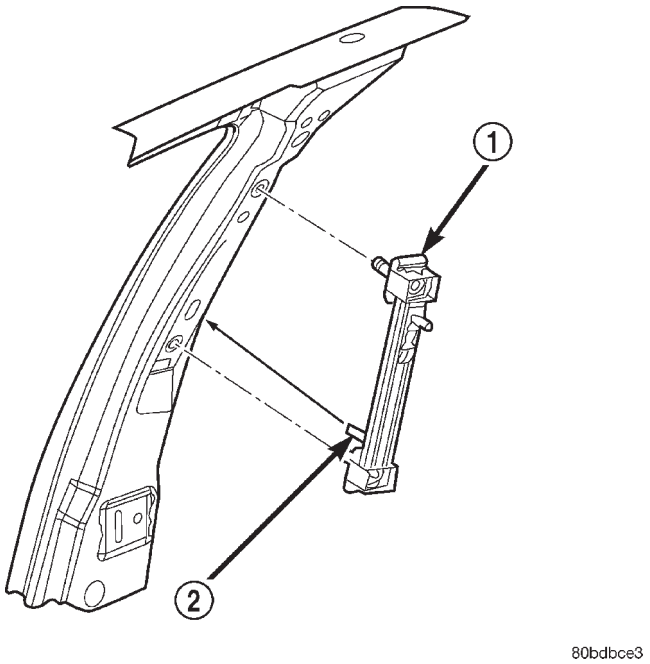

Fig. 69 Front Shoulder Belt Adjuster

1 – FRONT SHOULDER BELT ADJUSTER
2 – TAB IS ON BOTTOM

REAR SEAT BELT BUCKLE

REMOVAL

(1) Remove rear seat belt buckle fastener.
(2) Remove rear seat belt buckle from vehicle.

INSTALLATION

(1) Place seat belt buckle into position.
(2) Install rear seat belt buckle. Tighten the seat belt fastener to 40 N·m (30 ft. lbs.) torque.

REAR SEAT BELT RETRACTOR

REMOVAL

(1) Remove seat belt bezel from seat frame.
(2) Remove bolt and bezel attaching seat belt to seat frame.

INSTALLATION

(1) Place rear seat belt retractor position.
(2) Install bolt attaching retractor to rear seat frame. Tighten the seat belt bolt to 40 N·m (30 ft. lbs.) torque.

CHILD TETHER ANCHOR BEZEL

REMOVAL

(1) Lay rear seat back down (Fig. 70).
(2) Remove screws attaching Child Tether anchor bezel.

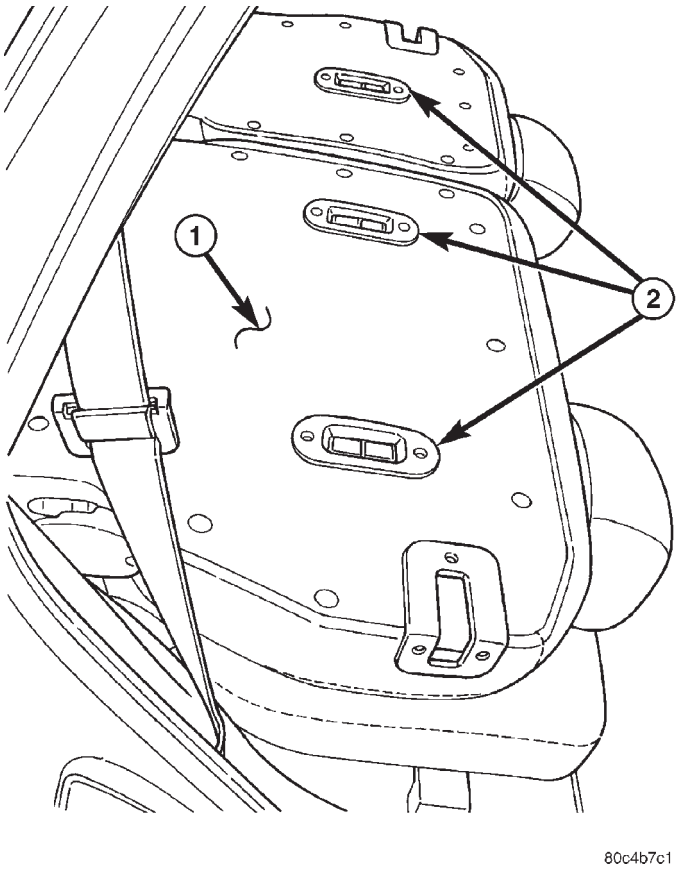

Fig. 70 Child Tether Anchor Bezel

1 - REAR SEAT BACK
2 - CHILD TETHER ANCHOR BEZEL

INSTALLATION

(1) Place Child Tether anchor bezel in position (Fig. 70).
(2) Install screws attaching bezels.

CARPET

REMOVAL

(1) Remove front seats.
(2) Remove rear seats from vehicle (Fig. 71)
(3) Remove door sill trim covers.
(4) Remove cowl trim covers.
(5) Remove center floor console.
(6) Remove rear seat pivot bezels and striker bezel.
(7) Remove lower fasteners from B-pillar trim panel.
(8) Pull carpet from behind trim panel.
(9) Fold carpet in half toward rear seat.
(10) Remove carpet through rear door opening.

REMOVAL AND INSTALLATION (Continued)

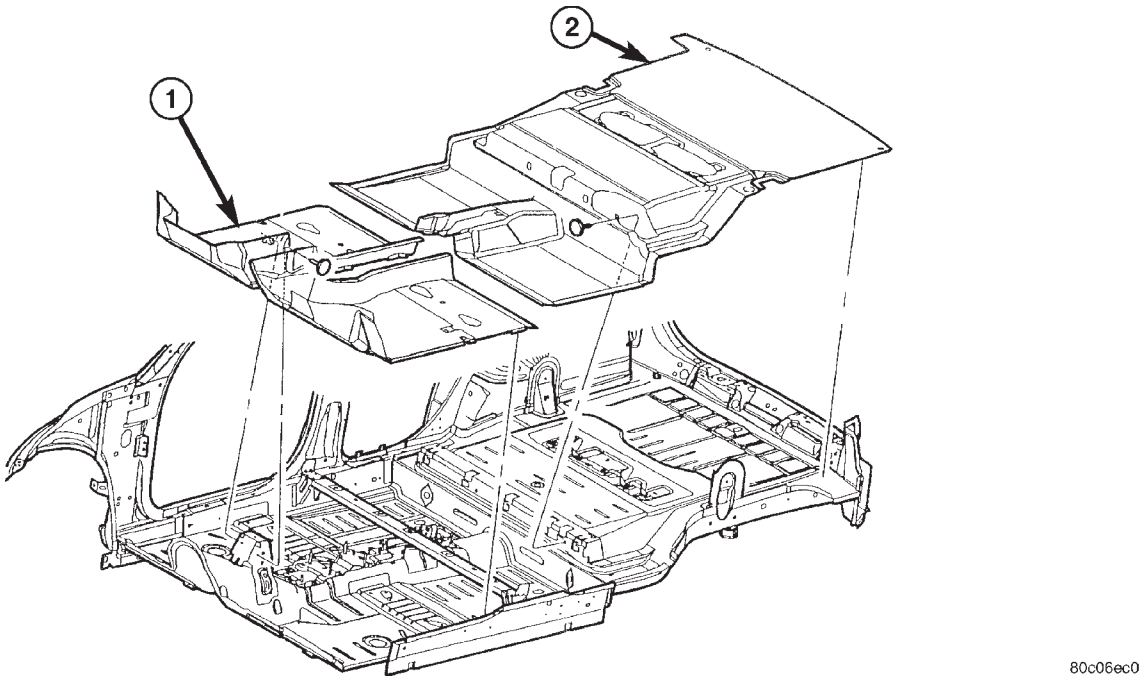

Fig. 71 Carpet

1 - PASSENGER FLOOR CARPET
2 - REAR PASSENGER FLOOR/CARGO AREA CARPET

INSTALLATION

The new carpet must be cut for installation. The area is marked on the reverse side of the carpet. The location is in front of the tunnel area.

(1) Install carpet through liftgate opening.
(2) Unfold carpet.
(3) Tuck carpet behind trim pane (Fig. 71).
(4) Install lower fasteners holding B-pillar trim panel.
(5) Install center floor console.
(6) Install cowl trim covers.
(7) Install rear seat pivot bezels and striker bezel.
(8) Install door sill trim covers.
(9) Install bolts attaching front seat belt lower anchors to floor. Tighten all seat belts to 40 N·m (30 ft. lbs.) torque.
(10) Install front seats.
(11) Install rear seats

SUN VISOR

WARNING: ALL VEHICLES WITH DRIVER AND PASSENGER SIDE AIRBAGS MUST HAVE A COLORED CODED FIVE BULLET POINT AIRBAG WARNING LABEL APPLIED TO THE SUN VISOR, VERIFY LABEL AVAILABILITY AND ENSURE THE LABEL IS INSTALLED.

REMOVAL

(1) Remove sun visor from center support.
(2) Remove screws attaching sun visor to roof header.
(3) Remove sun visor from header.
(4) If equipped, disconnect wire connector from body harness.
(5) Remove sun visor from vehicle.

INSTALLATION

(1) Place sun visor in position.
(2) If equipped, connect wire connector from body harness.
(3) Install screws attaching sun visor to header.
(4) Install sun visor into center support.

HEADLINER

REMOVAL

(1) Remove screws attaching sun visors to roof header panel (Fig. 72).
(2) Disconnect wire connector from lighted vanity mirror, if so equipped.
(3) Remove trim lace, if equipped with sun roof.
(4) Remove sun visors from vehicle.
(5) Remove A-pillar trim covers.
(6) Remove B-pillar trim panels.
(7) Remove C-pillar and D-pillar trim panels.
(8) Remove assist handle, if so equipped.
(9) Remove sun visor hooks.

REMOVAL AND INSTALLATION (Continued)

(10) Remove coat hooks, if so equipped.

(11) Remove three push in fasteners at rear of headliner.

(12) Disengage dome lamp wire connector, at rear of headliner.

(13) Remove push in fastener attaching wiring to C-pillar.

(14) Remove headliner through door opening.

INSTALLATION

(1) Position headliner in vehicle (Fig. 72).

(2) Install sun visor hooks, if so equipped.

(3) Install coat hooks, if so equipped.

(4) Install three push in fastener at rear of headliner.

(5) Install assist handles, if so equipped.

(6) Install push in fastener attaching headliner wiring to C-pillar.

(7) Connect dome lamp wire connector, at rear of headliner.

(8) Install (upper) quarter panel trim panel.

(9) Install B-pillar trim panels.

(10) Install A-pillar trim covers.

(11) Install trim lace, if equipped with sun roof.

(12) Install sun visors, lighted vanity mirror wire connector, if so equipped, and screws attaching sun visors to roof header panel.

INSIDE REAR VIEW MIRROR

REMOVAL

(1) Loosen the mirror base set screw (Fig. 73).

(2) Slide the mirror base upward and off the bracket.

INSTALLATION

(1) Position the mirror base at the bracket and slide it downward onto the support bracket (Fig. 73).

(2) Tighten the setscrew 1 N·m (15 in. lbs.) torque.

BODY VENT

REMOVAL

(1) Hoist rear end of vehicle and support on safety stands.

(2) From behind rear bumper fascia below quarter panel, disengage clips attaching body vent to wheel well.

(3) Remove body vent from vehicle (Fig. 74).

INSTALLATION

(1) Place body vent in vehicle.

(2) From behind rear bumper fascia below quarter panel, engage clips attaching body vent to wheel well.

(3) Lower vehicle.

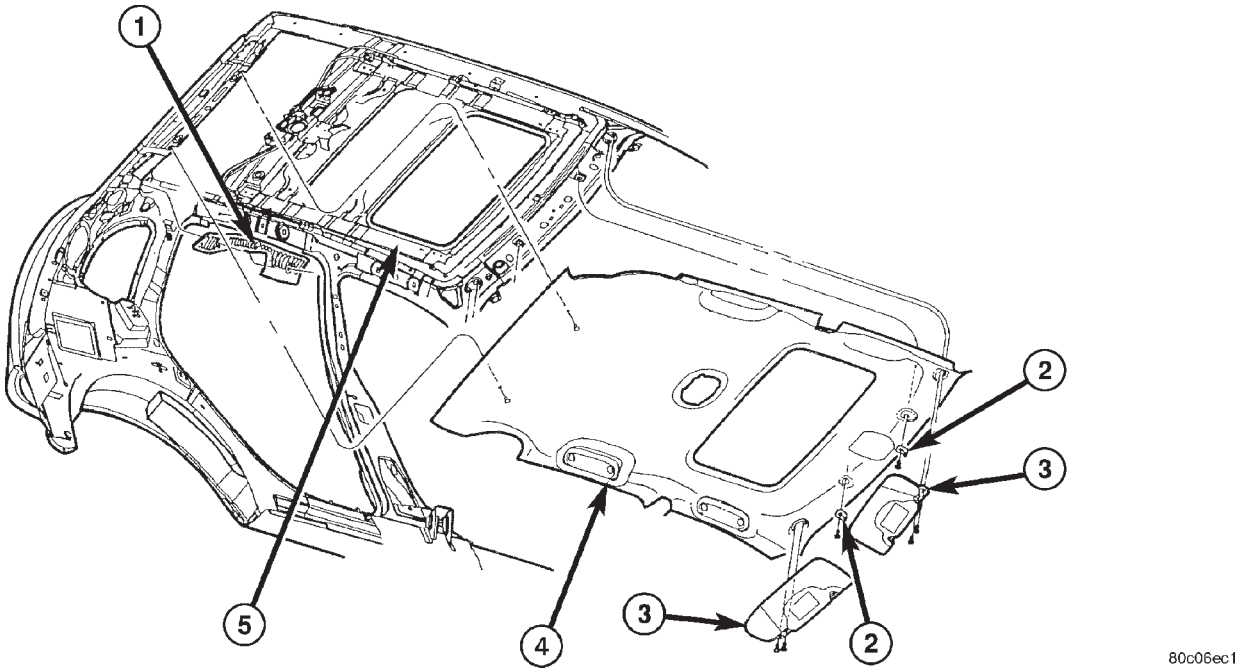

Fig. 72 Headliner with Sun Roof – Typical

1 - HEADLINER REAR QUARTER FOAM
2 - HEADLINER VISOR RECEPTACLE
3 - SUN VISOR
4 - HEADLINER PANEL ASSEMBLY
5 - SUN ROOF ASSEMBLY

REMOVAL AND INSTALLATION (Continued)

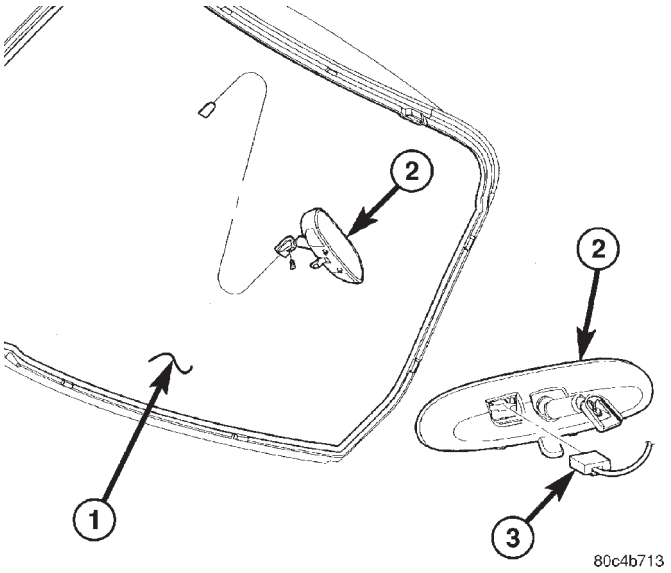

Fig. 73 Rear View Mirror

1 - WINDSHIELD
2 - REAR VIEW MIRROR
3 - REAR VIEW MIRROR CONNECTOR

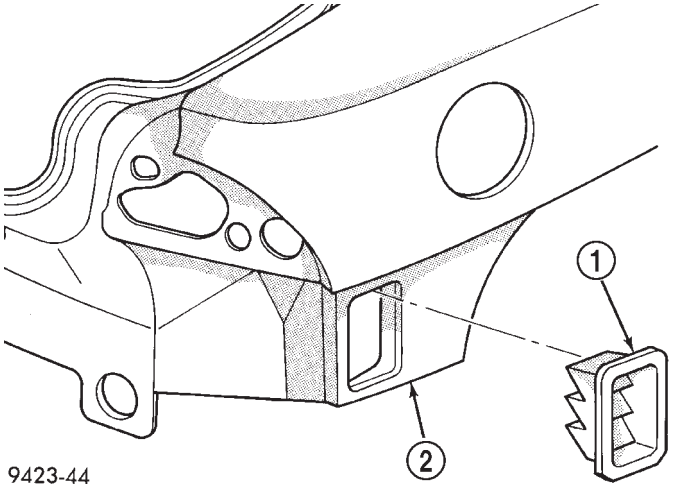

Fig. 74 Body Vent

1 – BODY VENT
2 – TRUNK WELL SIDE PANEL

ADJUSTMENTS

FRONT DOOR LATCH ADJUSTMENT

(1) Insert a Torx®-wrench through the elongated hole in the door end frame near the latch striker opening.
(2) Loosen Torx® head screw on the side of the latch linkage.
(3) Push button on outside door handle and release it.
(4) Tighten Torx® head screw on latch.
(5) Verify latch operation.

REAR DOOR LATCH ADJUSTMENT

(1) Insert a Torx® wrench through the elongated hole in the door end frame near the latch striker opening.
(2) Loosen screw on the side of the latch linkage.
(3) Push button on outside door handle and release it.
(4) Tighten screw on latch.
(5) Verify latch operation.

SPECIAL TOOLS

BODY

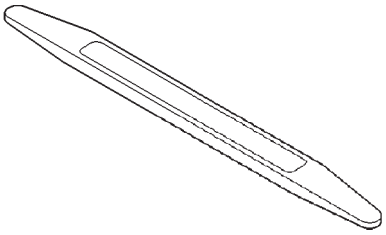

STICK, TRIM C 4755

SPECIFICATIONS

TABLE OF CONTENTS

page

SPECIFICATIONS
BODY LUBRICATION SPECIFICATIONS. 67
BODY GAP AND FLUSH MEASUREMENTS 68
BODY OPENING DIMENSION 69
BODY SEALING LOCATIONS. 71
STRUCTURAL ADHESIVES 83
WELD LOCATIONS – ENGINE BOX ASSEMBLY 86
WELD LOCATIONS – FRONT FENDER ASSEMBLY 94
WELD LOCATIONS – BODY SIDE APERTURE. . . 95
WELD LOCATIONS – FRONT FENDER ASSEMBLY 106
WELD LOCATIONS – UNDER BODY ASSEMBLY 109
TORQUE SPECIFICATIONS 129

SPECIFICATIONS

BODY LUBRICATION SPECIFICATIONS

LUBRICATION REQUIREMENTS

Body mechanisms and linkages should be inspected, cleaned, and lubricated, as required, to maintain ease of operation and to provide protection against rust and wear. When performing other under hood services, the hood latch release mechanism and safety catch should be inspected, cleaned, and lubricated. During the winter season, external door lock cylinders should be lubricated to assure proper operation when exposed to water and ice.

Prior to the application of any lubricant, the parts concerned should be wiped clean to remove dust and grit. If necessary, a suitable solvent can be used to clean the item to be lubricated. After lubricating a component, any excess oil or grease should be removed.

LUBRICANT APPLICATION

DOOR LOCK CYLINDERS

(1) Apply a small amount of lubricant directly into the lock cylinder.

(2) Apply a small amount of lubricant to the key.

(3) Insert key into lock cylinder and cycle the mechanism from the locked to the unlocked position.

NOTE: Do not add more lubricant.

(4) Cycle the lock cylinder mechanism several times to allow the lubricant to flow throughout the cylinder.

(5) Wipe all lubricant from exterior of lock cylinder and key.

ALL OTHER BODY MECHANISMS

(1) Clean component as described above.

(2) Apply specified lubricant to all pivoting and sliding contact areas of component.

LUBRICANT USAGE

ENGINE OIL

- Door Hinges – Hinge Pin and Pivot Contact Areas
- Hood Hinges – Pivot Points
- Liftgate Hinges

MOPAR® SPRAY WHITE CUBE OR EQUIVALENT

- Door Check Straps
- Liftgate Latches
- Liftgate Prop Pivots
- Ash Receiver
- Fuel Filler Door Remote Control Latch Mechanism
- Parking Brake Mechanism
- Sliding Seat Tracks
- Liftgate Latch

MOPAR® Multipurpose GREASE OR EQUIVALENT

- All Other Hood Mechanisms

MOPAR® LOCK CYLINDER LUBRICANT OR EQUIVALENT

- Door Lock Cylinders
- Liftgate Lock Cylinder

SPECIFICATIONS (Continued)

BODY GAP AND FLUSH MEASUREMENTS

BODY GAP AND FLUSH

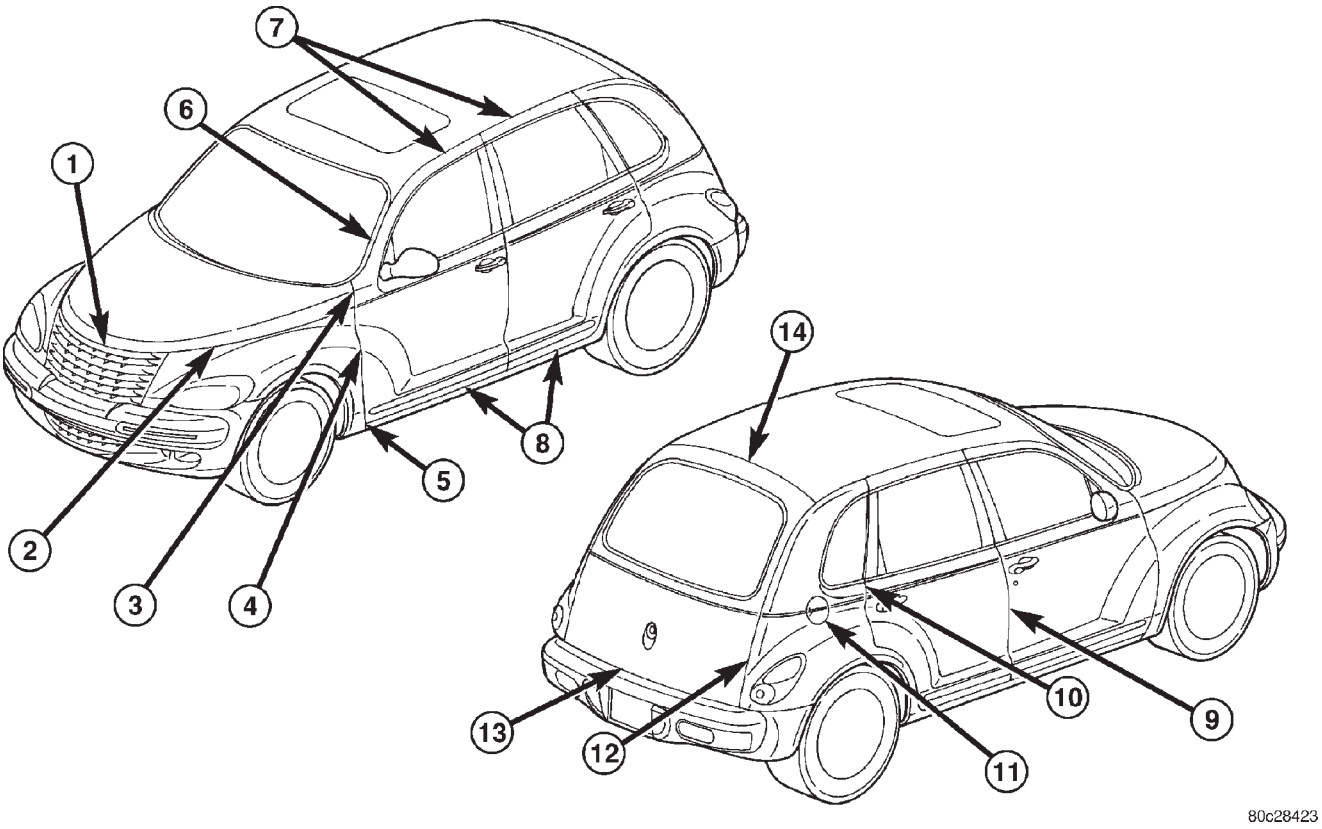

	LOCATION	GAP	FLUSH
1	Hood to Grille	// within 2.0	Grille Ends 5.0 Grille Center 7.0 Under flush ± 1.5
2	Hood to Fender	6.0 ± 1.0 // 1.0	Fender Front Overflush 1.5 ± 1.0 Fender Middle & Rear ± 1.0 Consistent Within 1.0
3	Hood to Door	5.0 ± 1.0 // 1.0	± 1.5 Consistent within 1.0
4	Front Door to Fender	5.0 ± 1.0 // 1.0	+0.5 -1.5 Lower Area Underflush 1.0 ± 1.0 Consistent within 1.0
	Fender to Sill	4.5 ± 1.5 // 1.0	± 1.0
6	Front Door To Windshield Molding (A-Pillar)	5.0 ± 1.75 // 1.0	± 1.0 Consistent Within 1.0
7	Front & Rear Door to Roof	6.0 ± 1.5 // 1.0	Overflush 2.0 ± 2.0 // 1.5
8	Front & Rear Door To Sill	6.0 ± 1.5 // 1.0	Underflush 1.0 ± 1.0
9	Front Door to Rear Door	4.5 ± 1.0 // 1.0	Excluding Door Header ± 1.5 Door Header ± 1.0 Front Door Lower Area Overflush 1.0 ± 1.0 Consistent Within 1.0
10	Rear Door to Body Side	4.5 ± 1.0 // 1.0	± 1.0 Consistent Within 1.0
11	Body Side to Fuel Filler	3.0 ± 1.0 Consistent Within 1.0	Body Side 0.5 Overflush ± 0.75
12	Liftgate to Body Side	4.0 ± 1.0 // 1.0	Liftgate Underflush 1.0 ± 1.0 Consistent Within 1.0
13	Liftgate to Rear Fascia	7.0 ± 1.5 // 1.5	N/A
14	Liftgate to Roof	8.0 ± 1.5 // 1.5	Liftgate Underflush 1.0 +1.0 -2.0 Consistent Within 1.5
NOTE: ALL MEASUREMENTS ARE IN mm			

SPECIFICATIONS (Continued)

BODY OPENING DIMENSION

DOOR AND WINDSHIELD OPENINGS

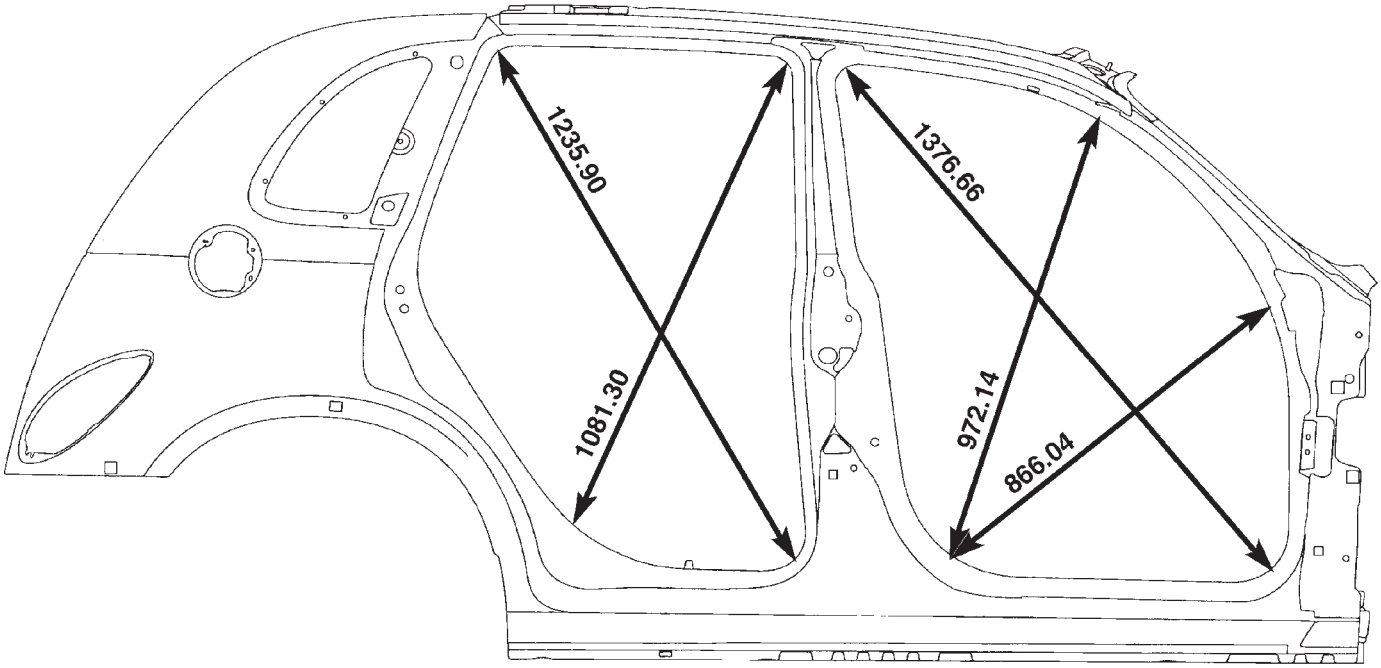

80c4da56

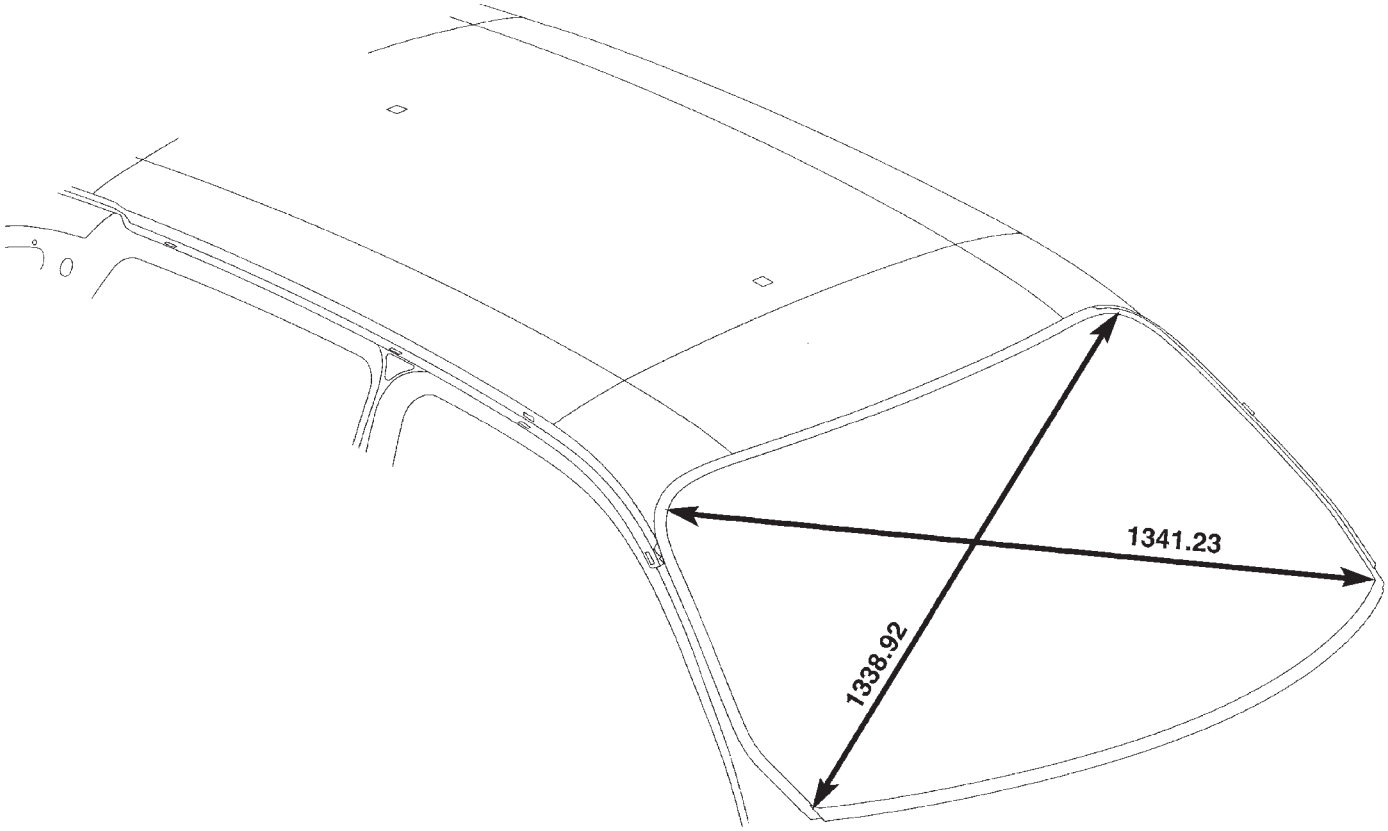

80c4da55

SPECIFICATIONS (Continued)

REAR WINDOW AND LIFTGATE OPENINGS

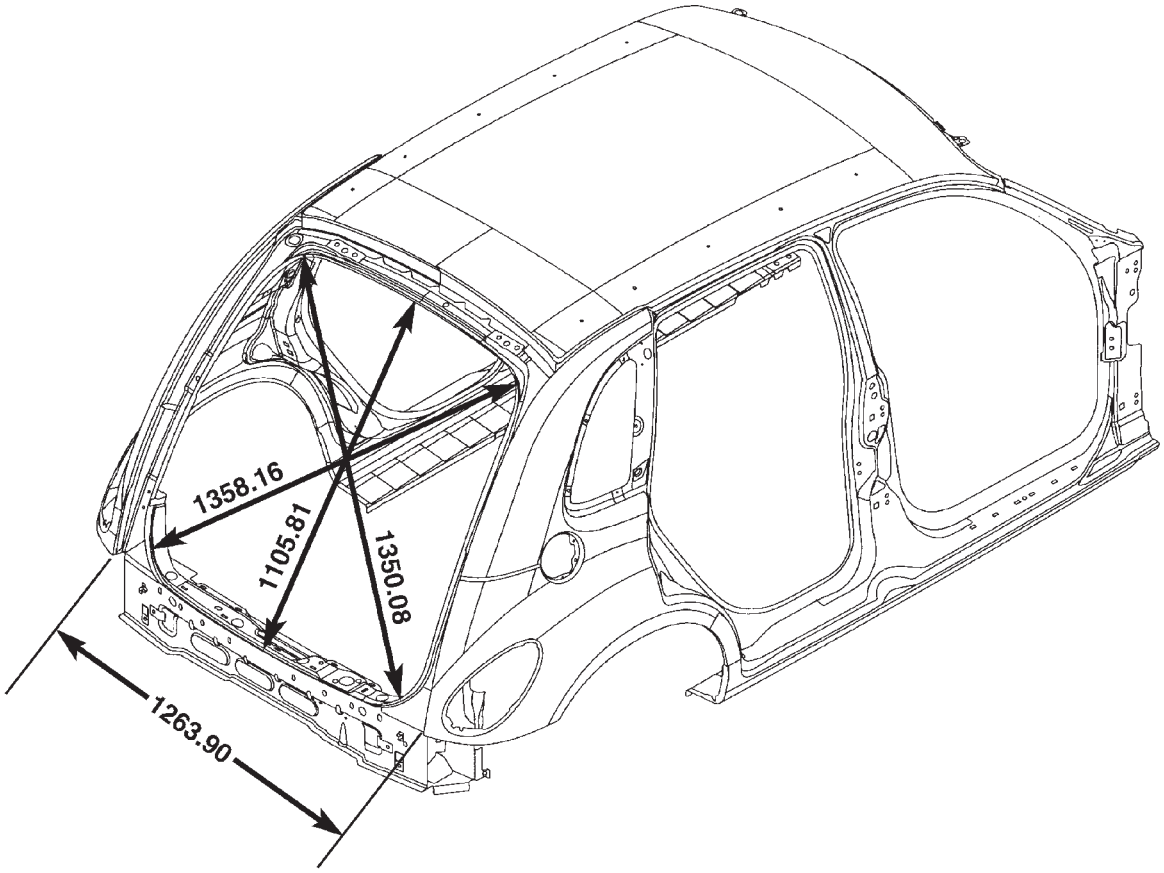

80c4da57

SPECIFICATIONS (Continued)

BODY SEALING LOCATIONS

BODY LOCATIONS

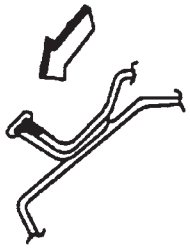

HOLD GUN NOZZLE IN DIRECTION OF ARROW IN ORDER TO EFFECTIVELY SEAL METAL JOINTS.

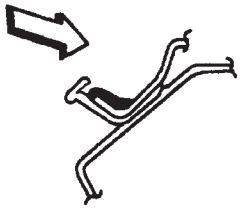

DO NOT HOLD GUN NOZZLE IN DIRECTION OF ARROW. SEALER APPLIED AS SHOWN IN INEFFECTIVE.

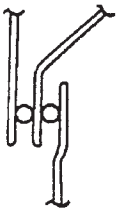

3 METAL THICKNESS

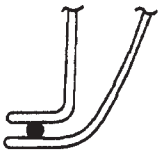

2 METAL THICKNESS

3 METAL THICKNESS

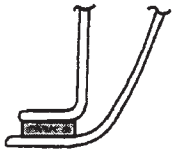

2 METAL THICKNESS

SYMBOLS

	THUMBGRADEABLE SEALER
	EXTRUDABLE THERMOPLASTIC
	EXPOSED THERMOPLASTIC SEALANT
zzzzzzzz	HIDDEN SEALANT

80b62b1b

SPECIFICATIONS (Continued)

LOAD BEAM, STRUT TOWER, COWL AND DASH PANEL

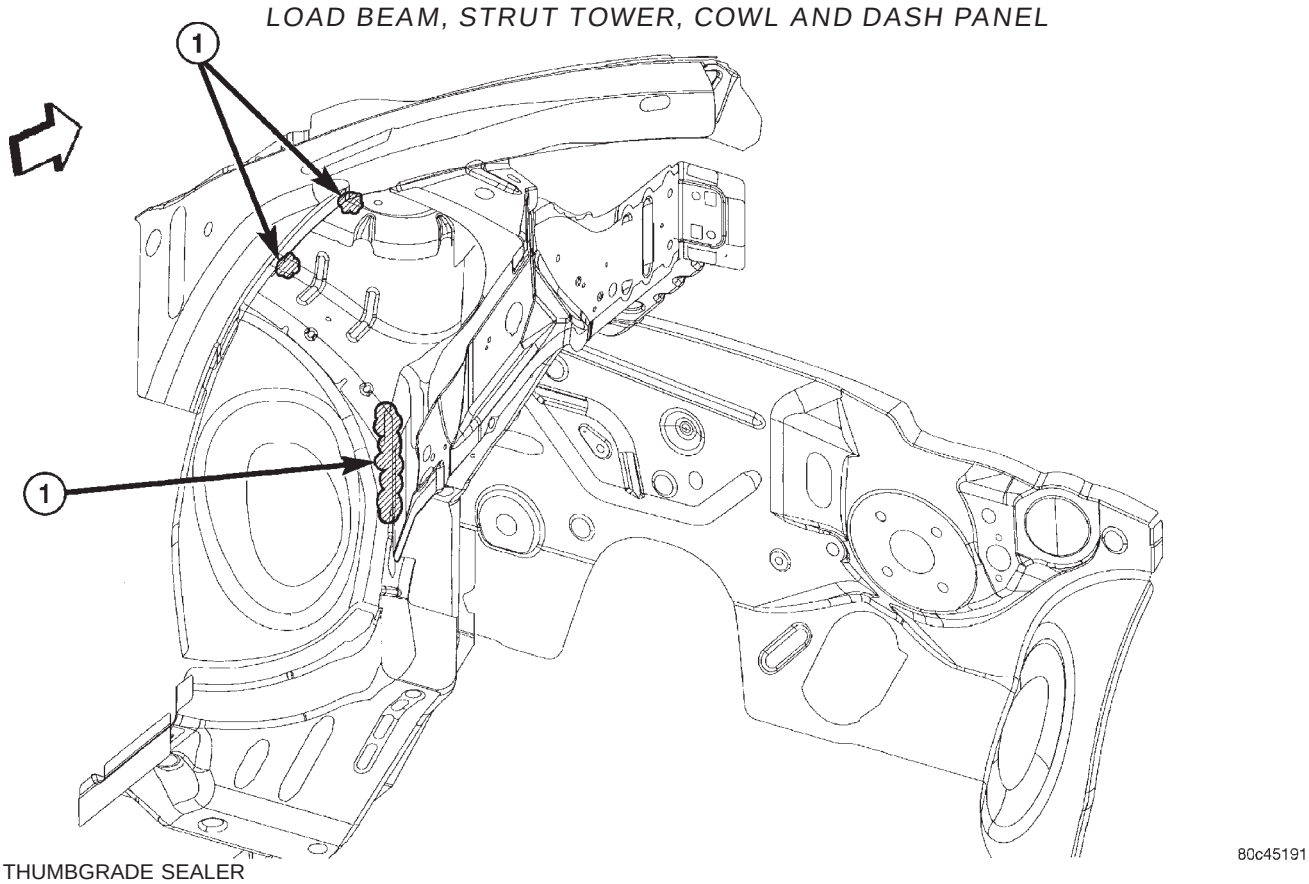

1 - THUMBGRADE SEALER

COWL AND DASH PANEL

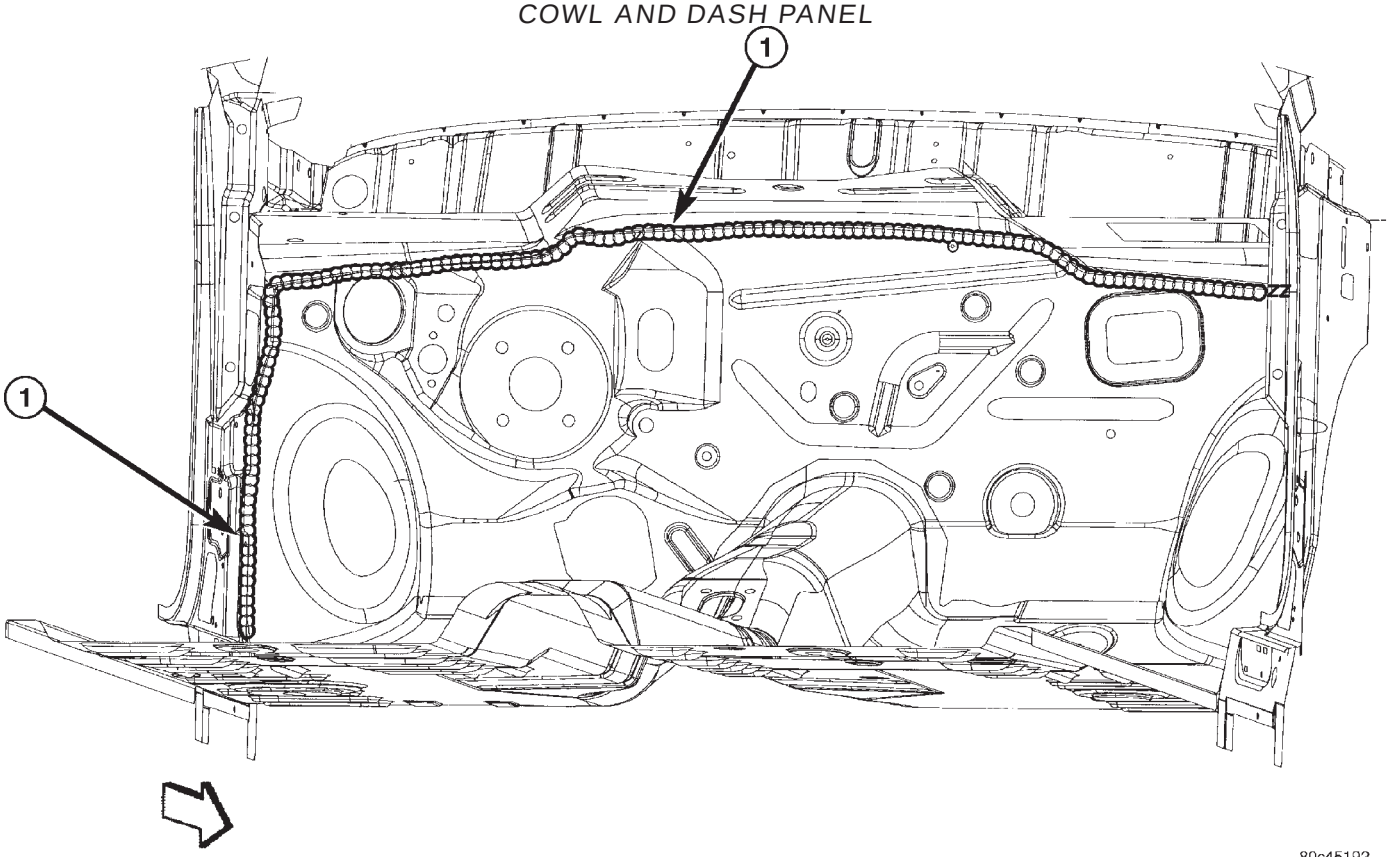

1 - SPRAYABLE NON-PAINTABLE SEALER

SPECIFICATIONS (Continued)

FLOOR PAN AND DASH PANEL

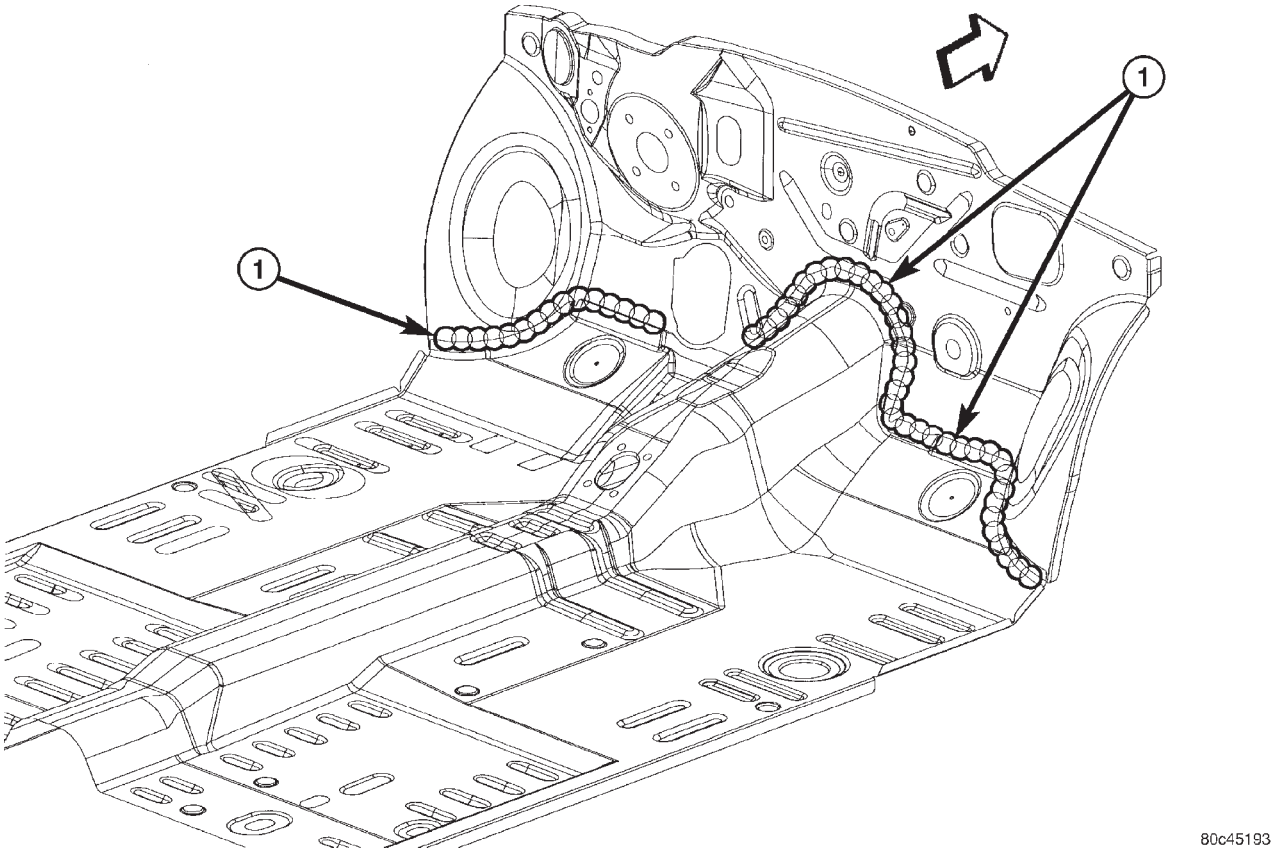

1 - SPRAYABLE NON-PAINTABLE SEALER

SPECIFICATIONS (Continued)

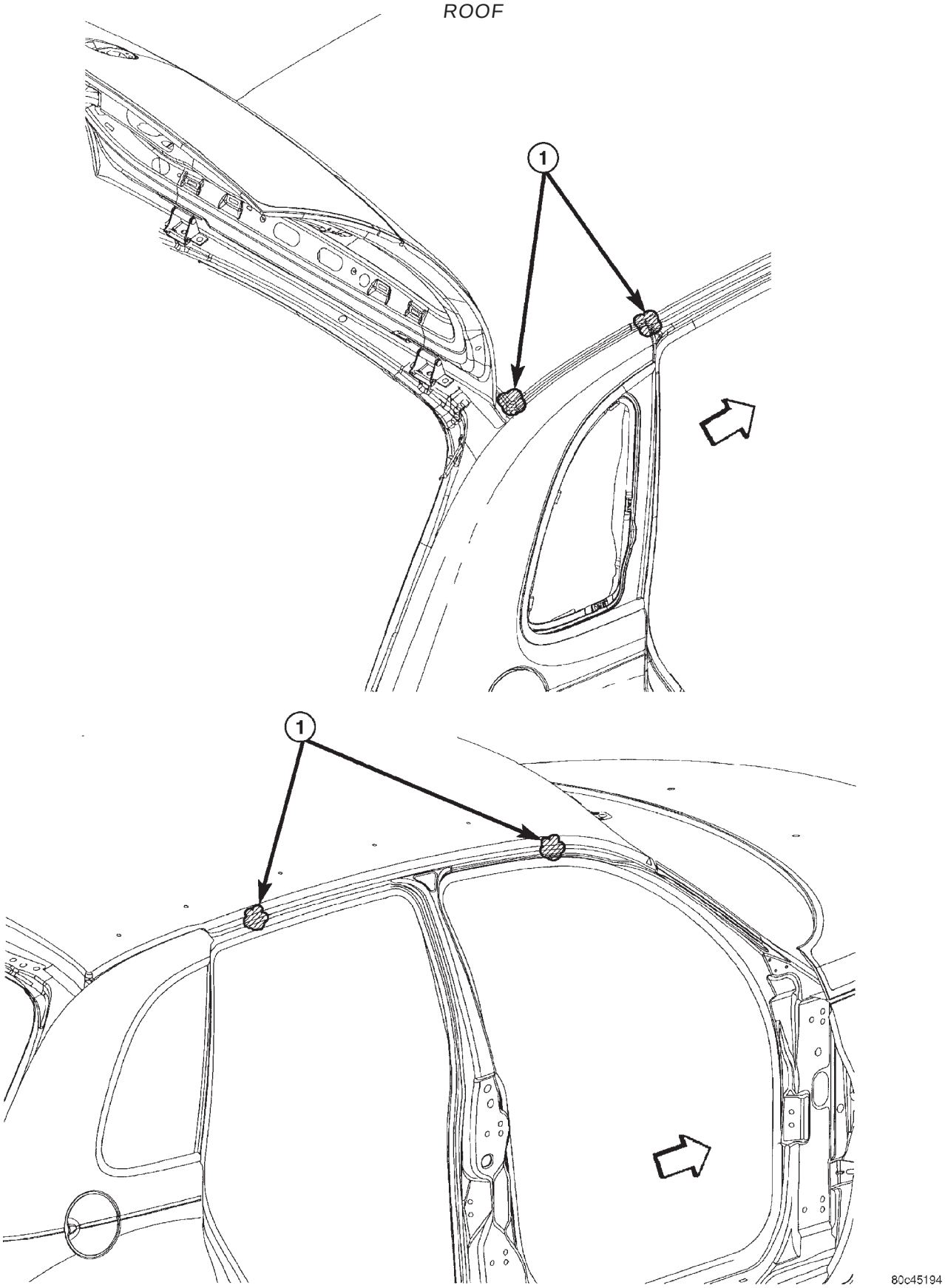

1 - THUMBGRADE SEALER

SPECIFICATIONS (Continued)

INNER WHEELHOUSE

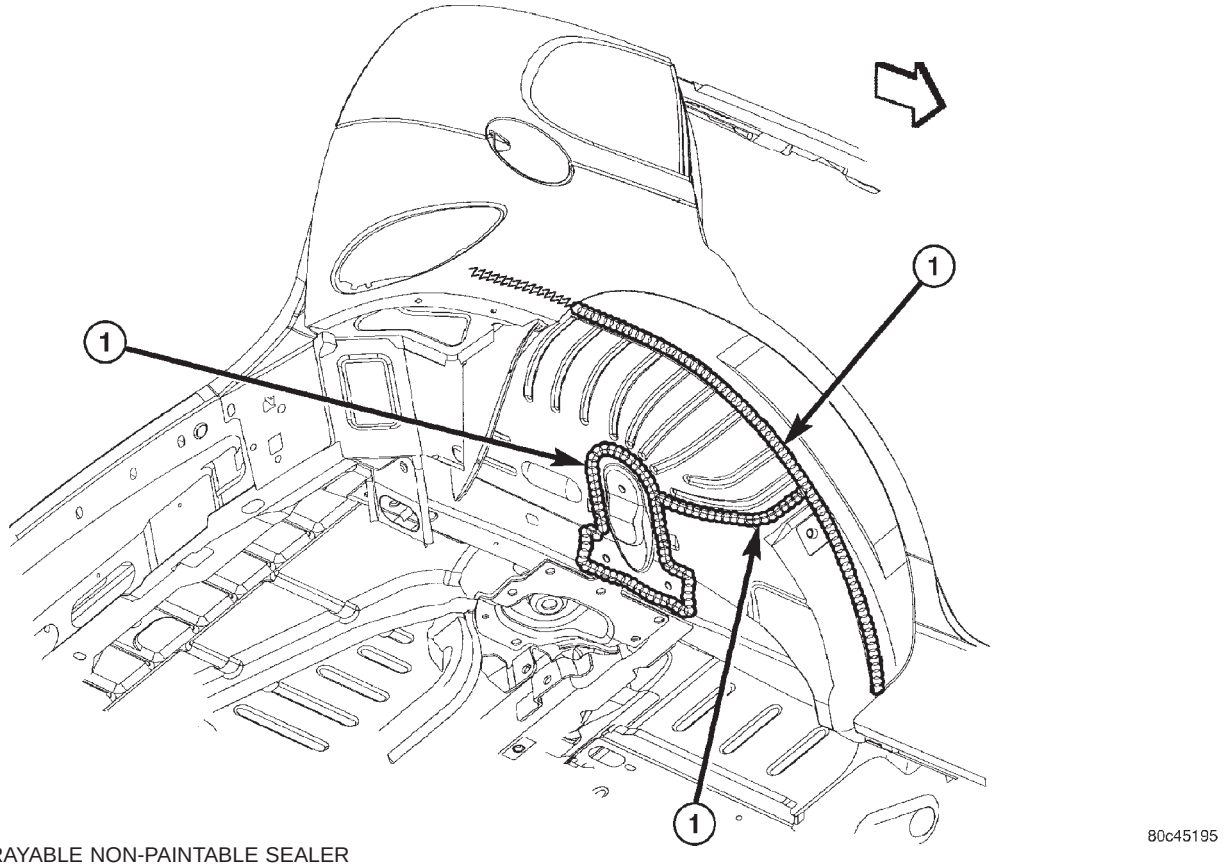

1 - SPRAYABLE NON-PAINTABLE SEALER

SPECIFICATIONS (Continued)

COWL PLENUM

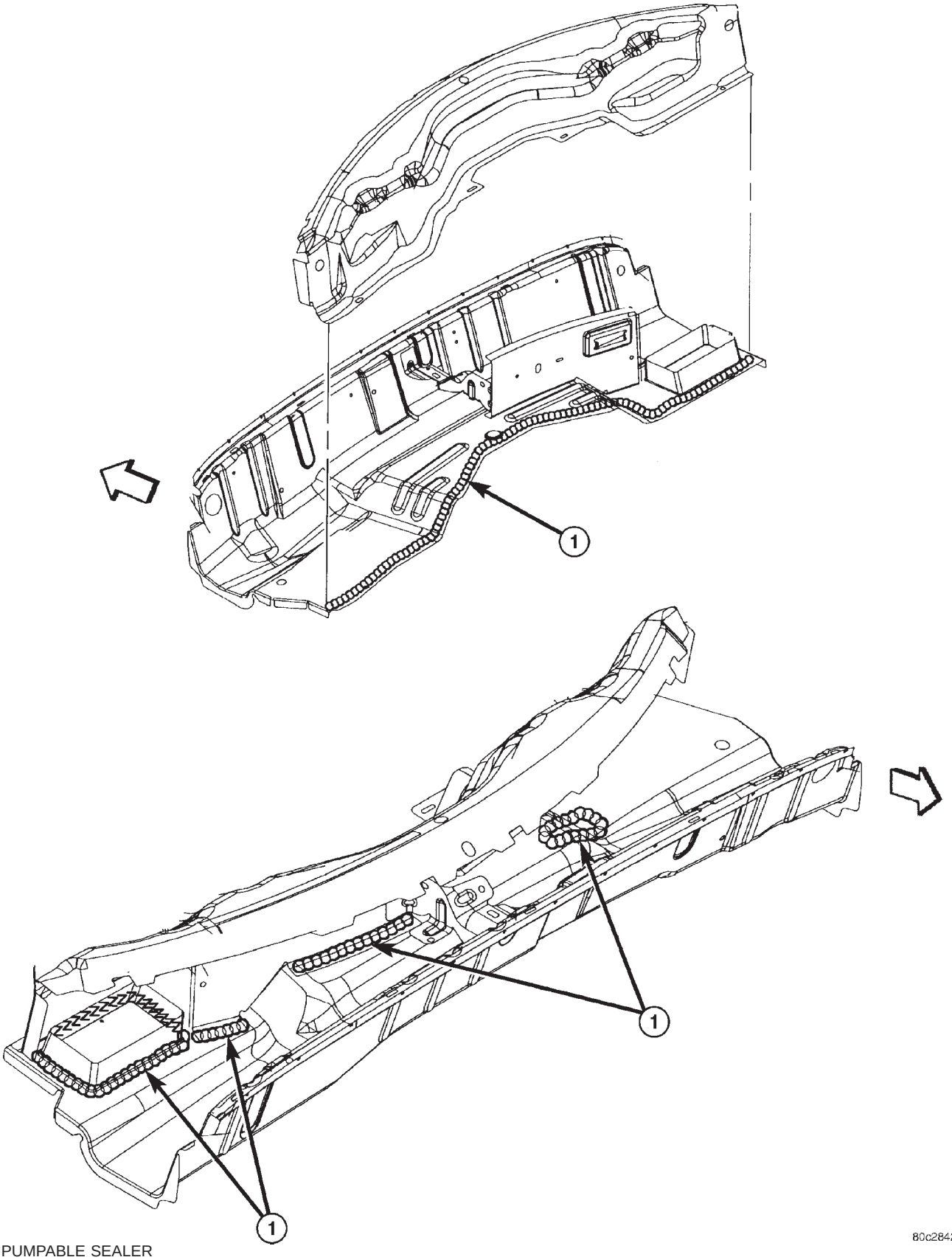

1 - PUMPABLE SEALER

SPECIFICATIONS (Continued)

COWL AND COWL PLENUM

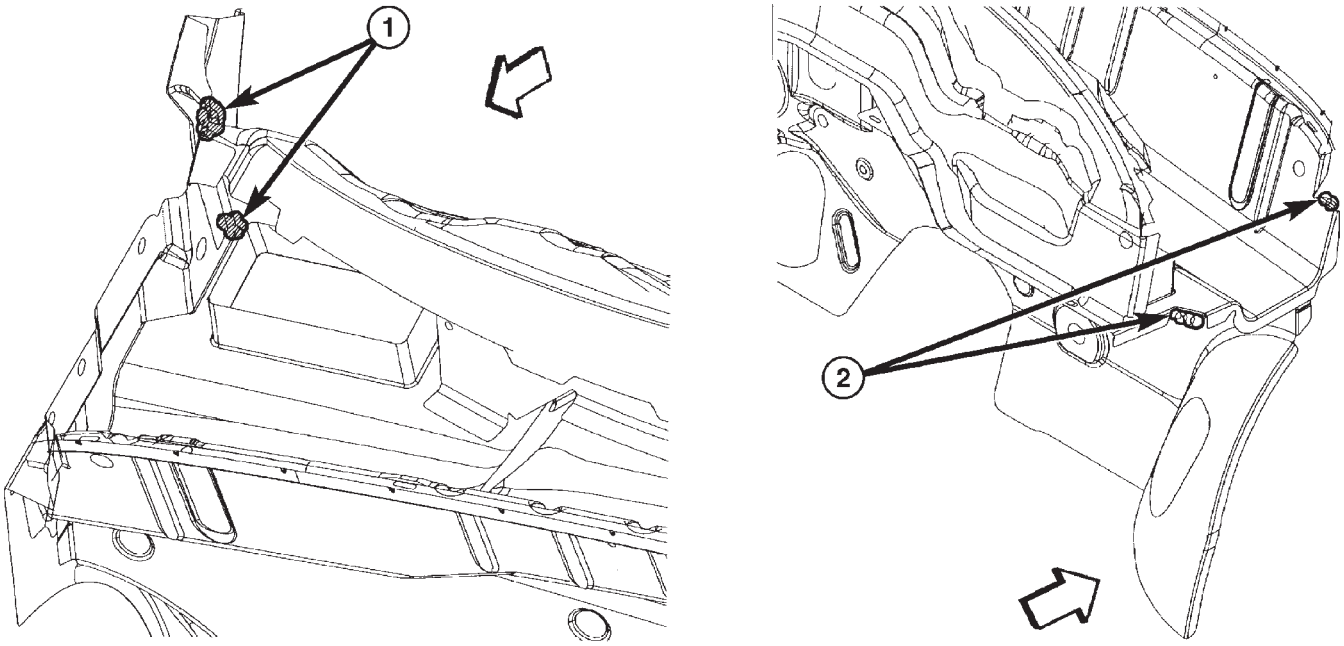

1 - NON-EXPANDABLE THUMBGRADE SEALER
2 - EXPANDABLE SEALER TAPE

COWL PLENUM AND DASH PANEL

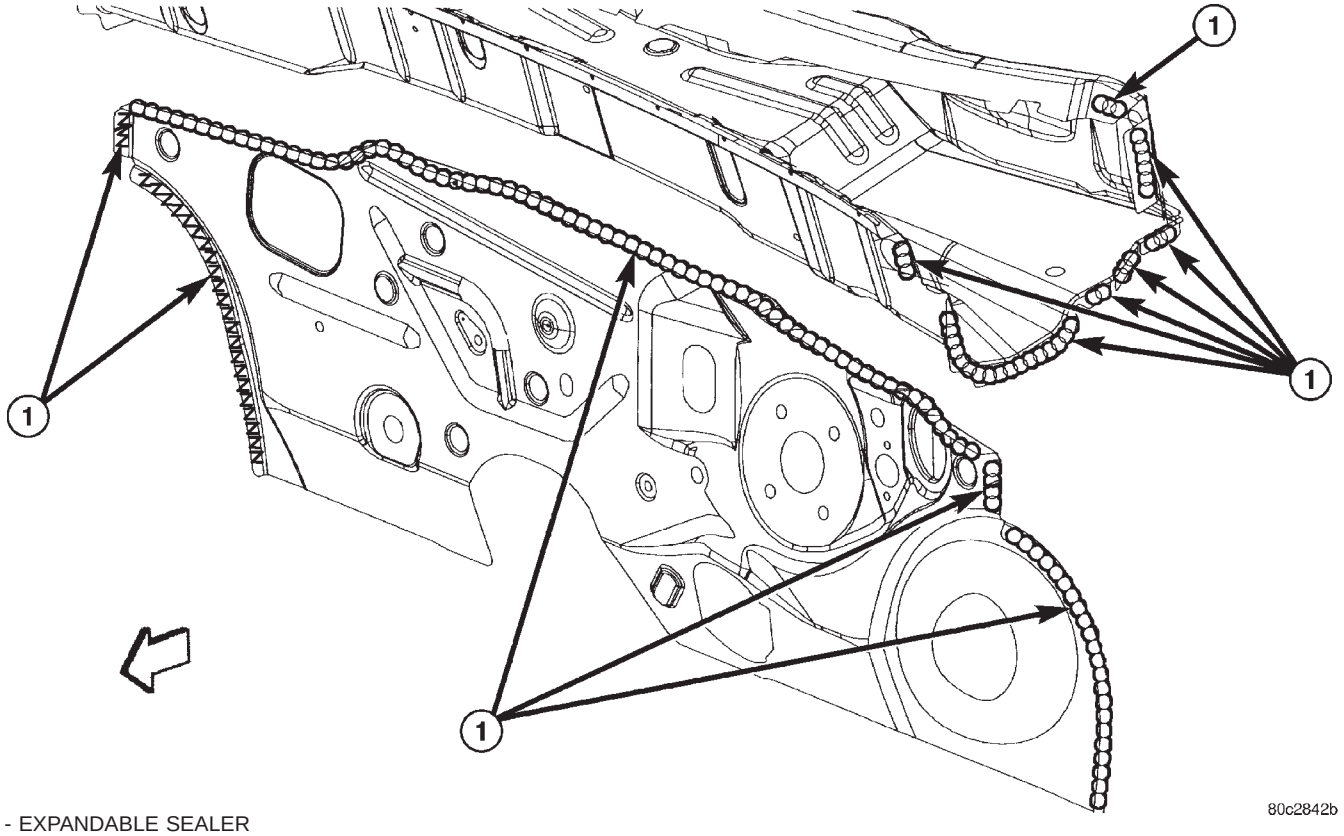

1 - EXPANDABLE SEALER

SPECIFICATIONS (Continued)

COWL SIDE

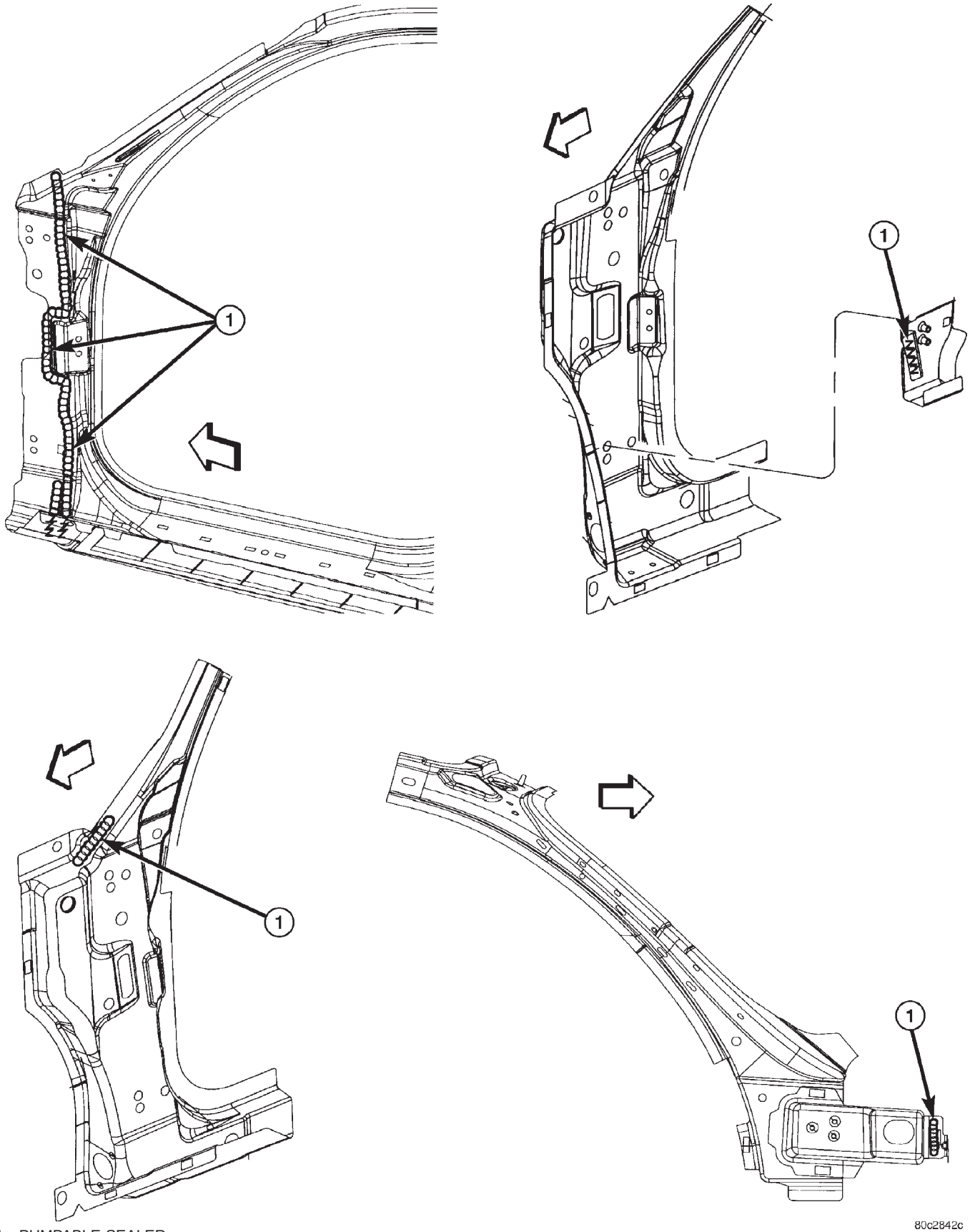

1 - PUMPABLE SEALER

SPECIFICATIONS (Continued)

BODY SIDE APERTURE

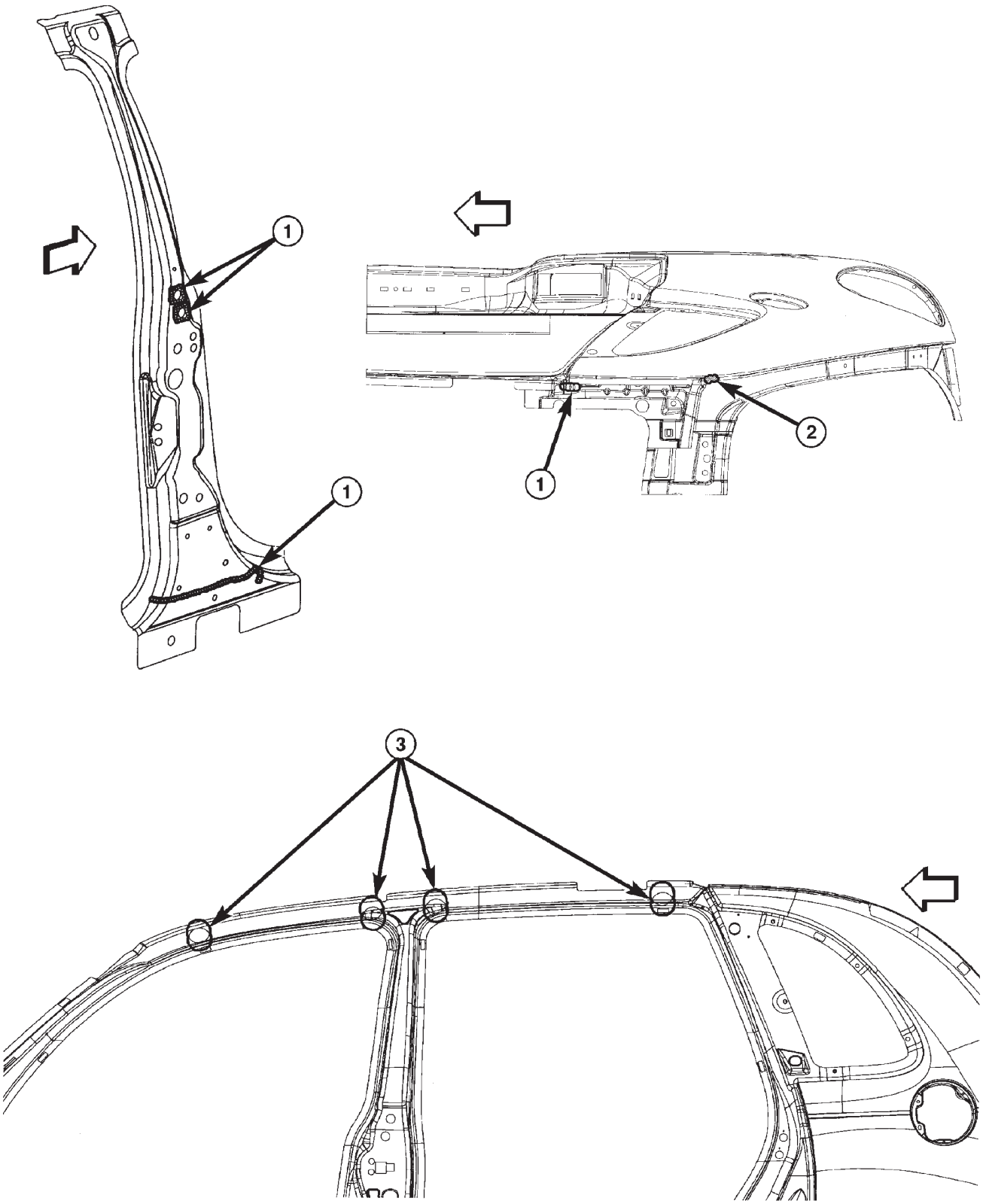

1 - SEALER TAPE
2 - THUMBGRADE SEALER
3 - PUMPABLE SEALER

SPECIFICATIONS (Continued)

BODY SIDE QUARTER PANEL APERTURE

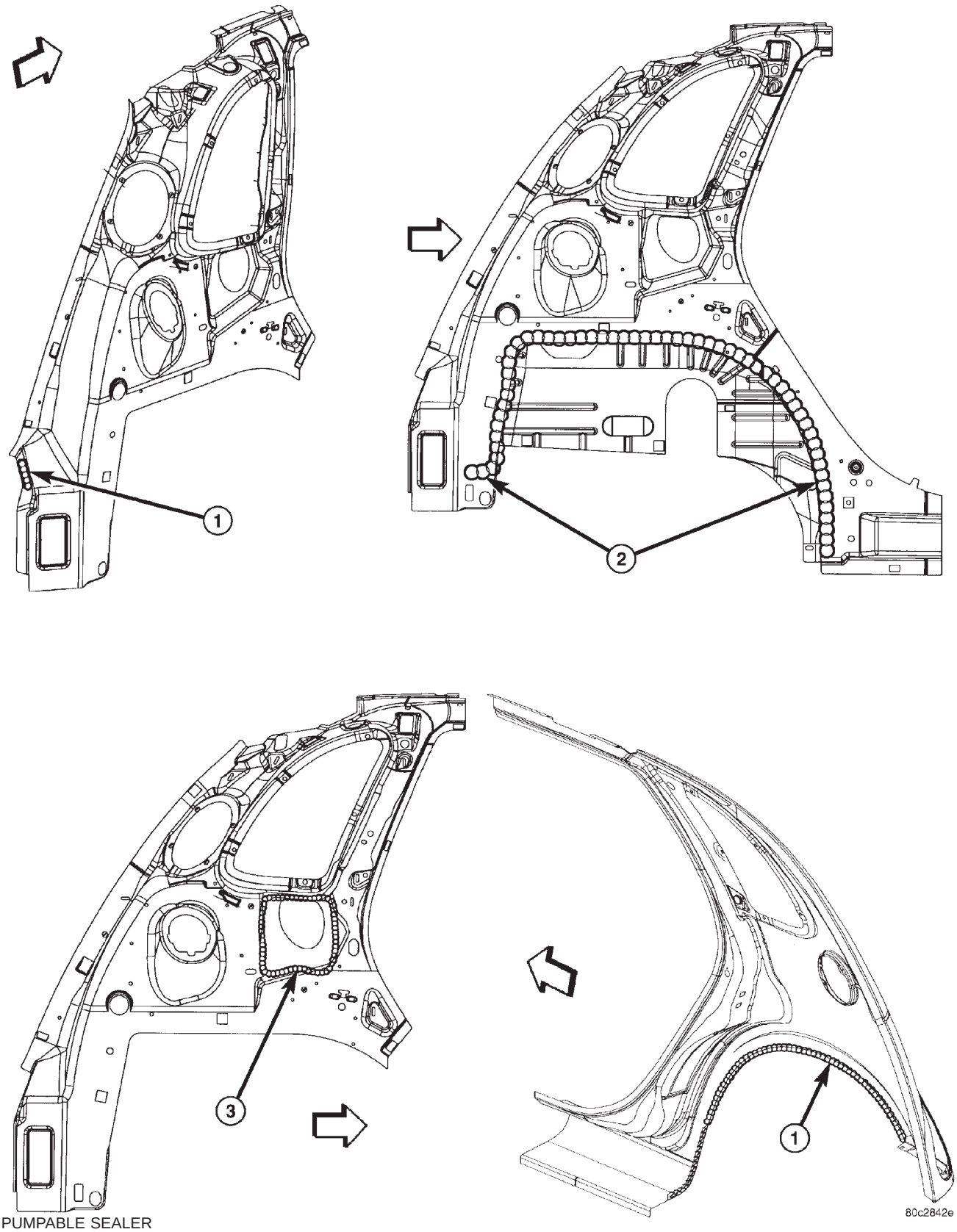

1 - PUMPABLE SEALER
2 - EXPANDABLE BEAD SEALER
3 - SEALER TAPE

SPECIFICATIONS (Continued)

REAR FLOOR PAN

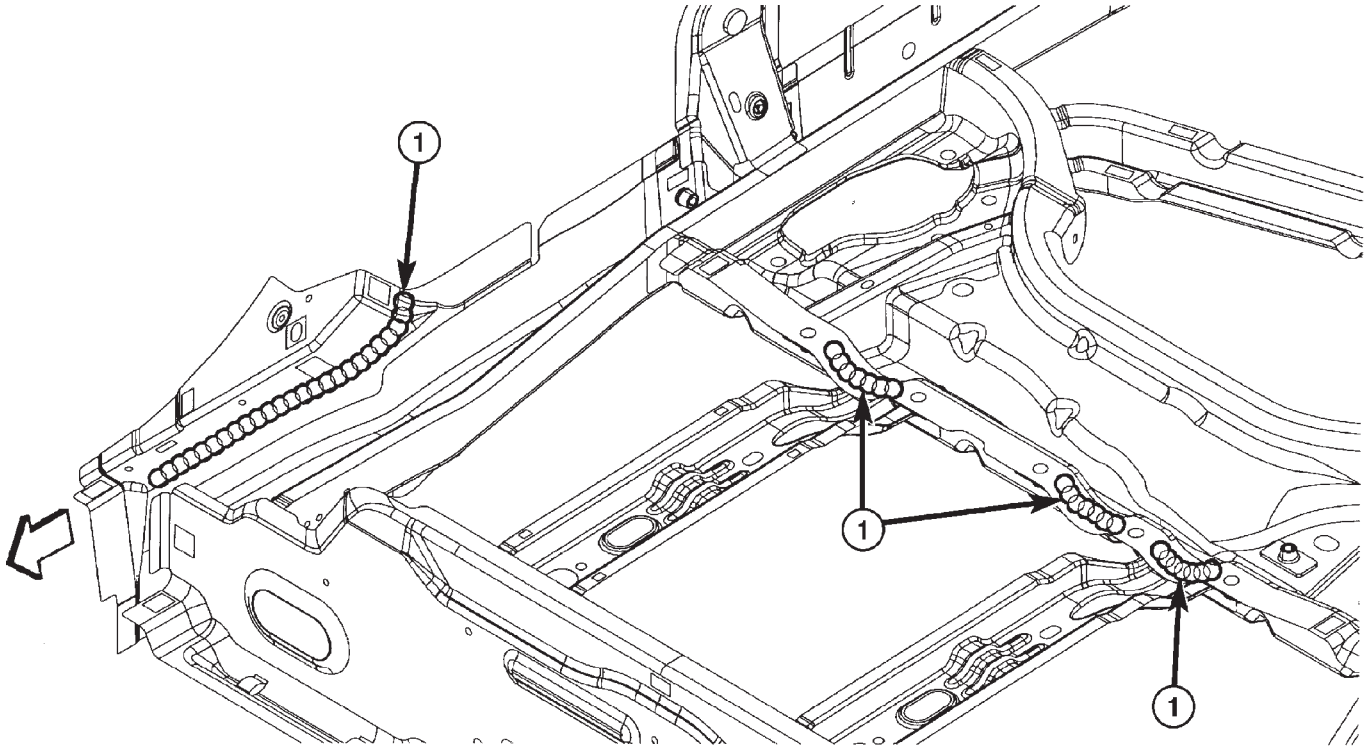

1 - PUMPABLE SEALER

SPECIFICATIONS (Continued)

CARGO AREA

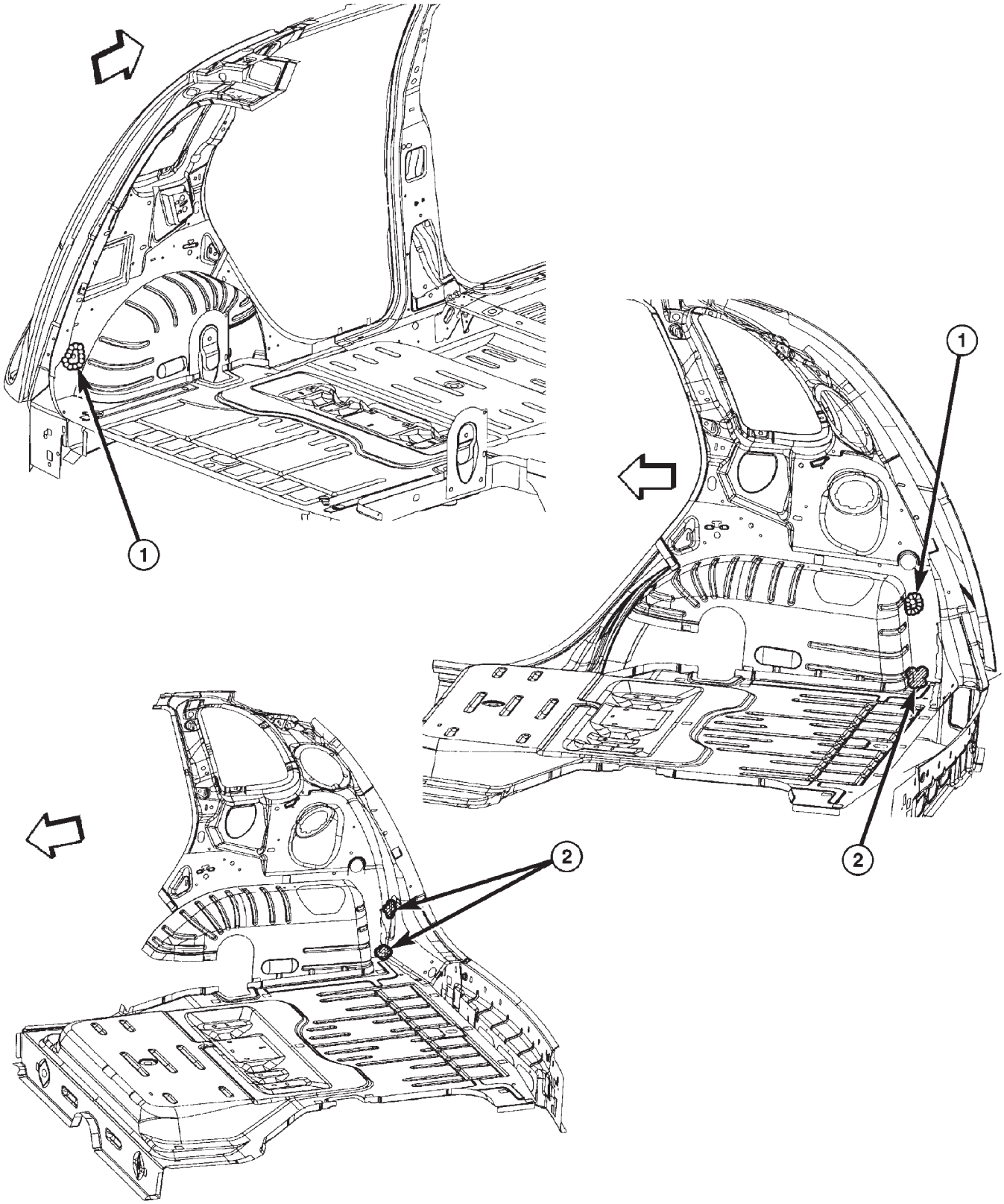

1 - SEALER TAPE
2 - THUMBGRADE SEALER

SPECIFICATIONS (Continued)

STRUCTURAL ADHESIVES

COWL SIDE AND LOAD BEAM

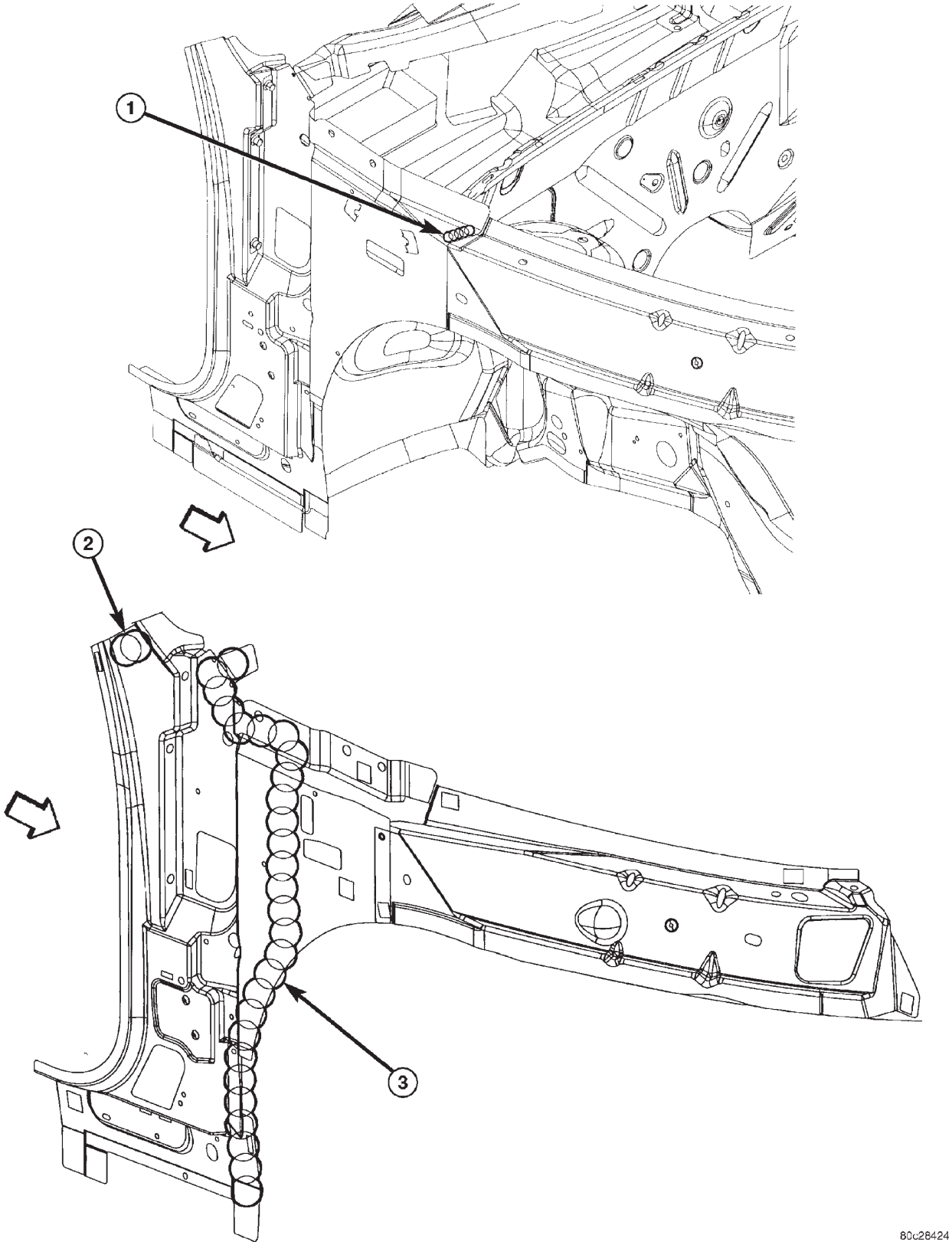

1 - STRUCTURAL ADHESIVE TAPE
2 - EXPANDABLE SEALER
3 - ADHESIVE STRIP BEAD

SPECIFICATIONS (Continued)

DASH PANEL AND FLOOR PAN

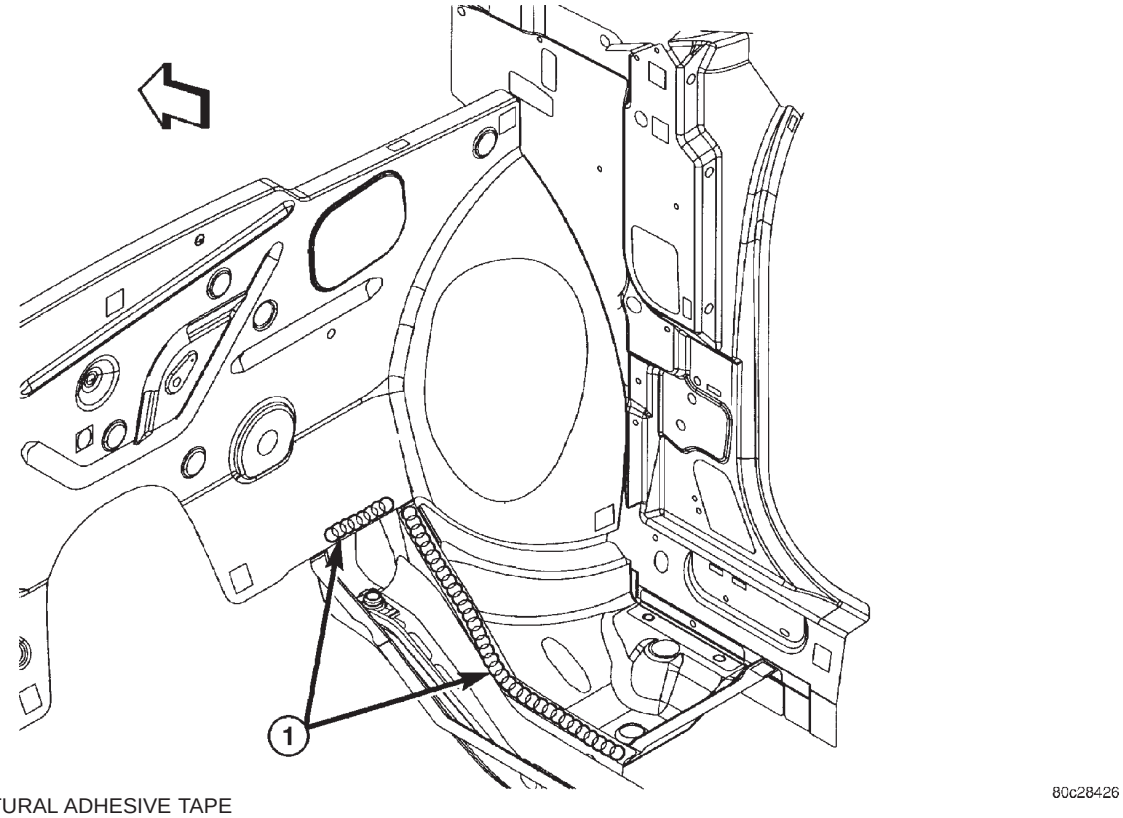

1 - STRUCTURAL ADHESIVE TAPE

REAR FLOOR PAN

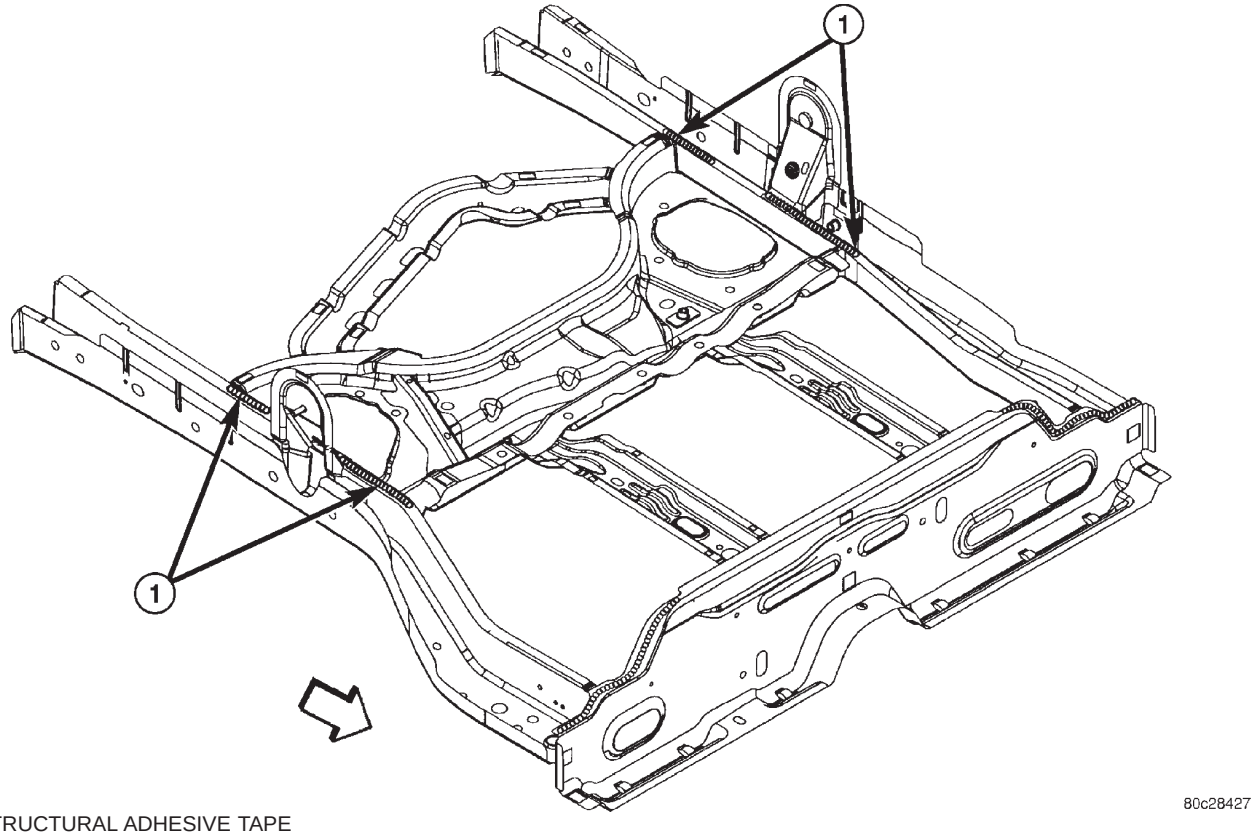

1 - STRUCTURAL ADHESIVE TAPE

SPECIFICATIONS (Continued)

BODY SIDE APERTURE

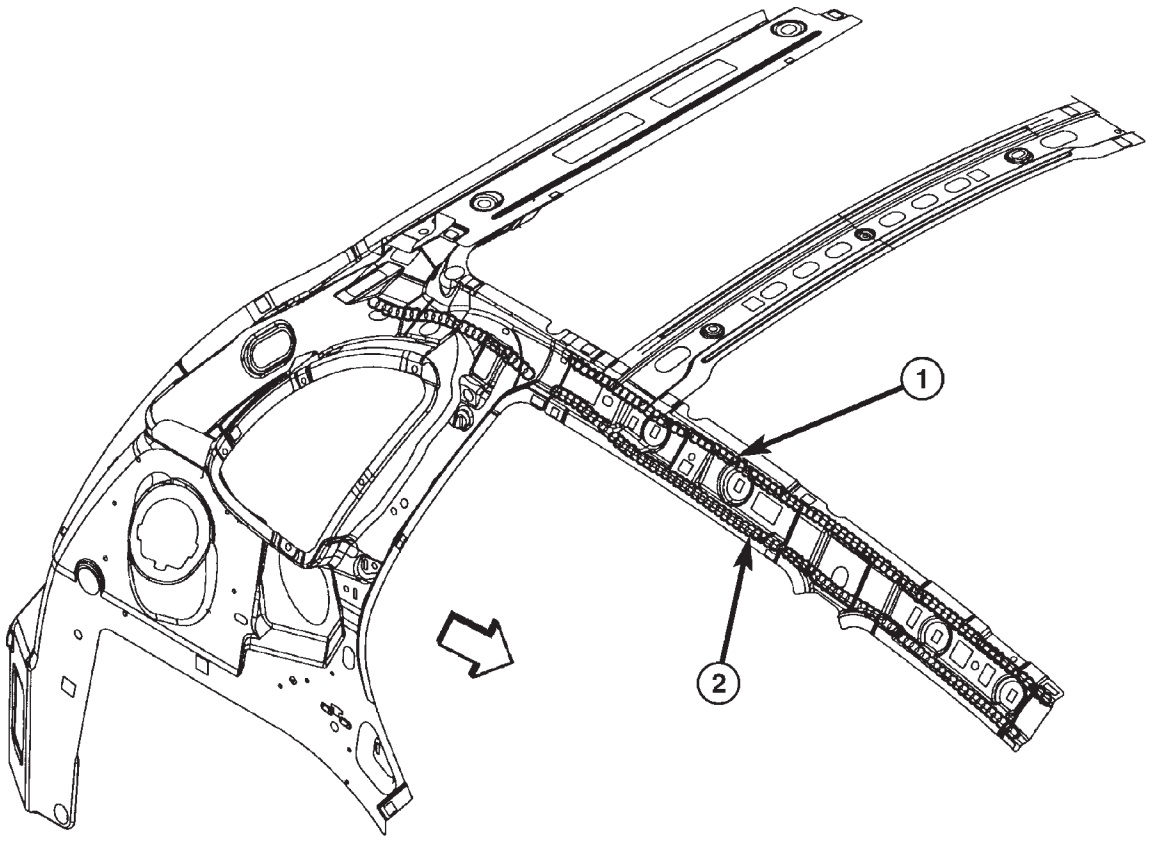

1 - PUMPABLE ADHESIVE
2 - STRUCTURAL ADHESIVE

SPECIFICATIONS (Continued)

WELD LOCATIONS – ENGINE BOX ASSEMBLY

FRONT SIDE RAIL REAR TO DASH AND COWL SIDE PANELS

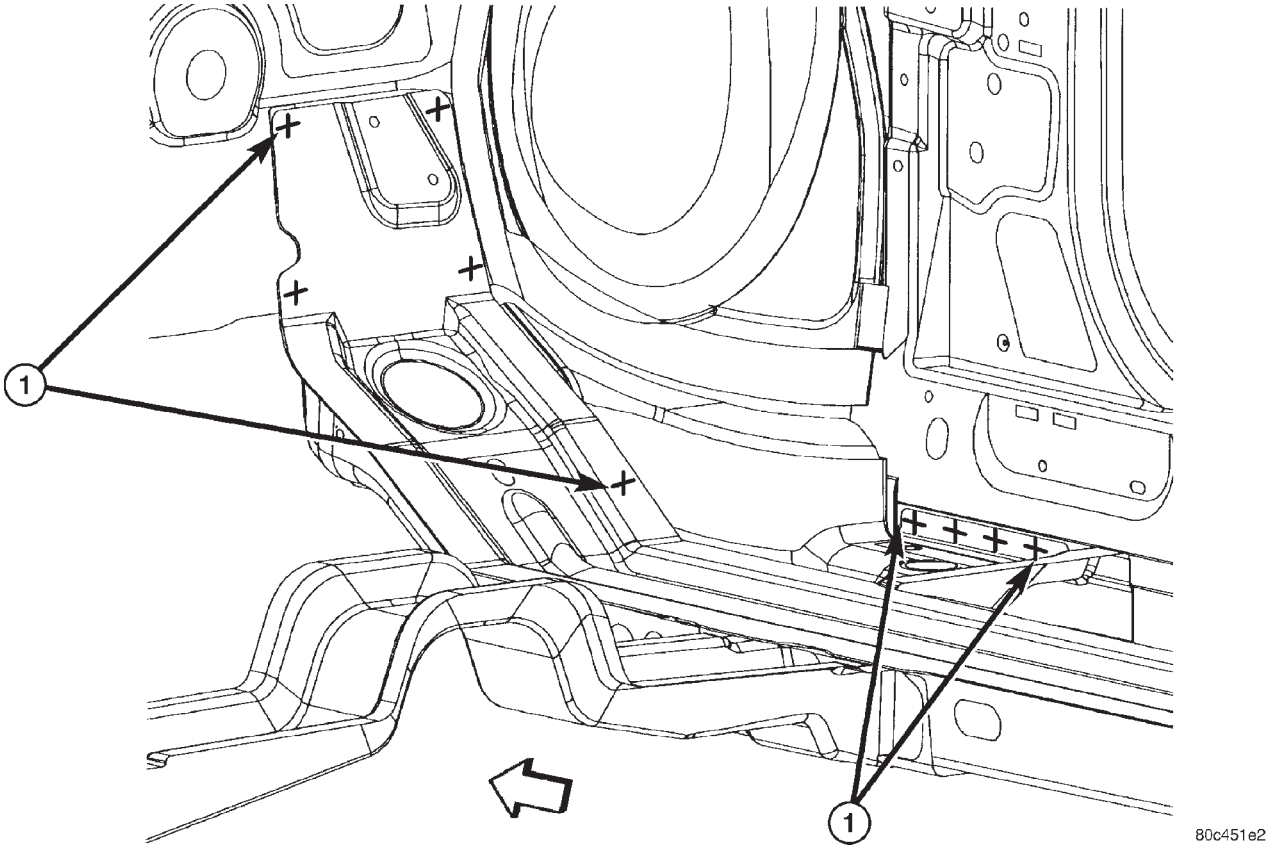

1 - WELDING OF TWO PARTS
2 - WELDING OF THREE PARTS
3 - WELDING OF FOUR PARTS

SPECIFICATIONS (Continued)

RADIATOR CLOSURE TO UPPER LOAD BEAM AND FRONT SIDE RAIL ASSEMBLY

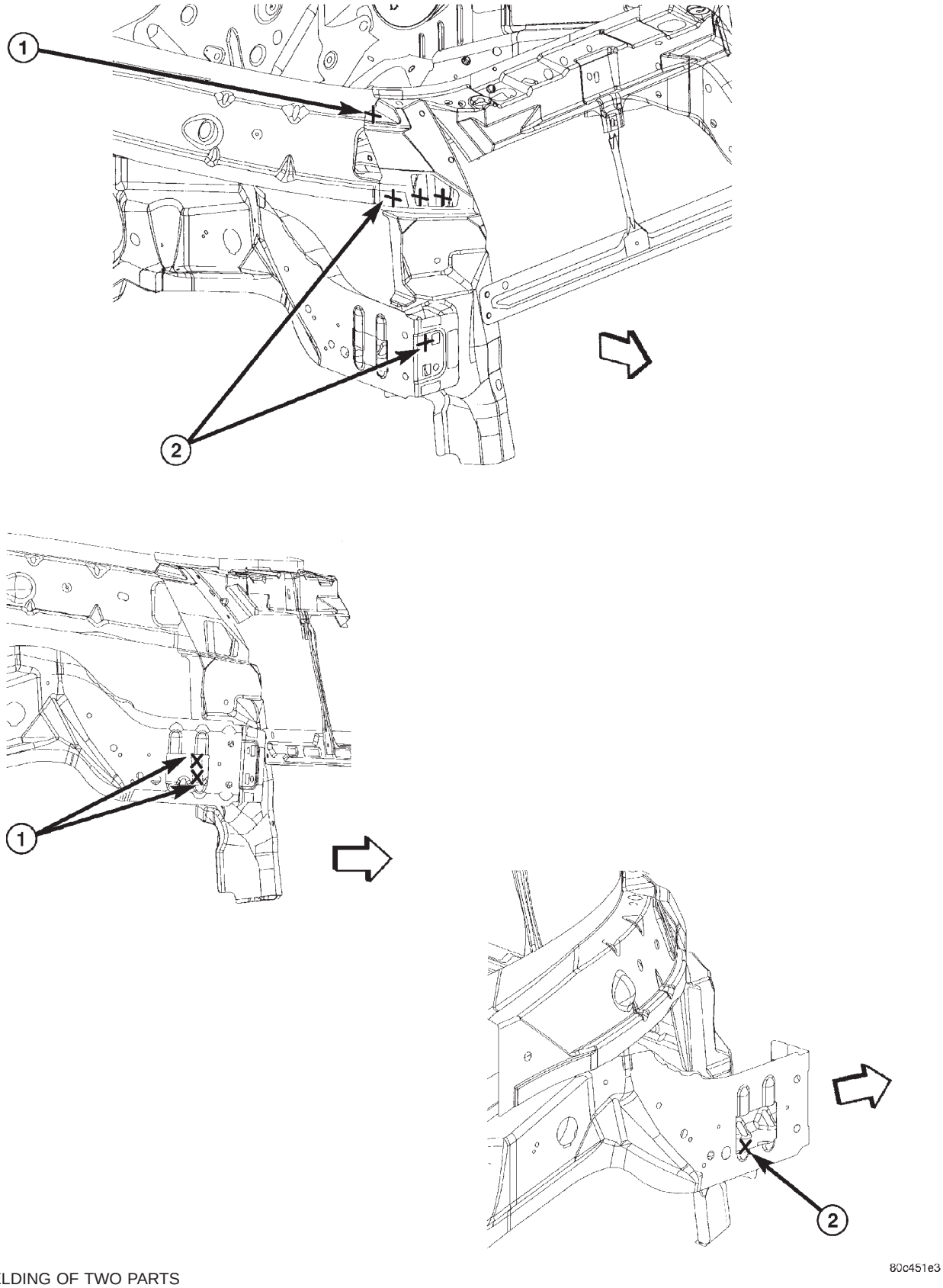

1 - WELDING OF TWO PARTS
2 - WELDING OF THREE PARTS
3 - WELDING OF FOUR PARTS

SPECIFICATIONS (Continued)

STRUT TOWER TO DASH PANEL

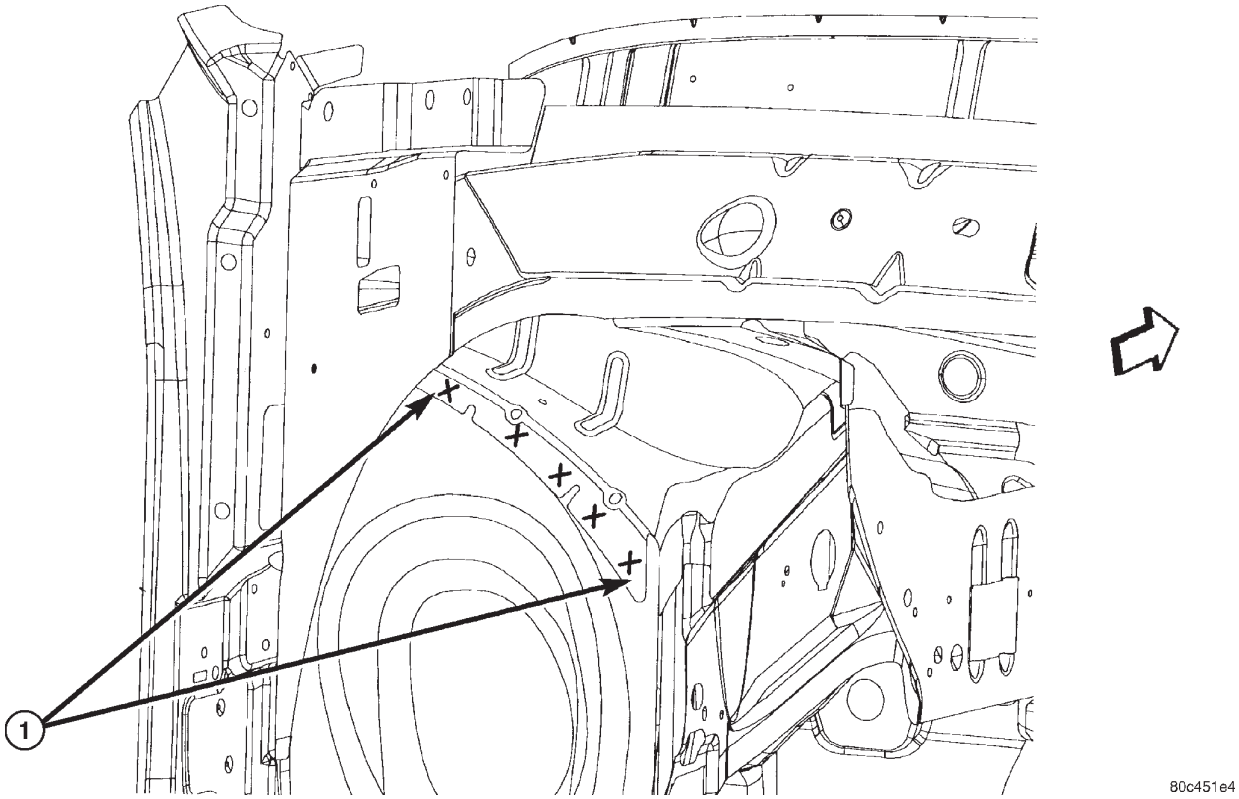

1 - WELDING OF TWO PARTS
2 - WELDING OF THREE PARTS
3 - WELDING OF FOUR PARTS

RADIATOR CLOSURE PANEL BRACE TO UPPER RADIATOR CROSSMEMBER BRACE

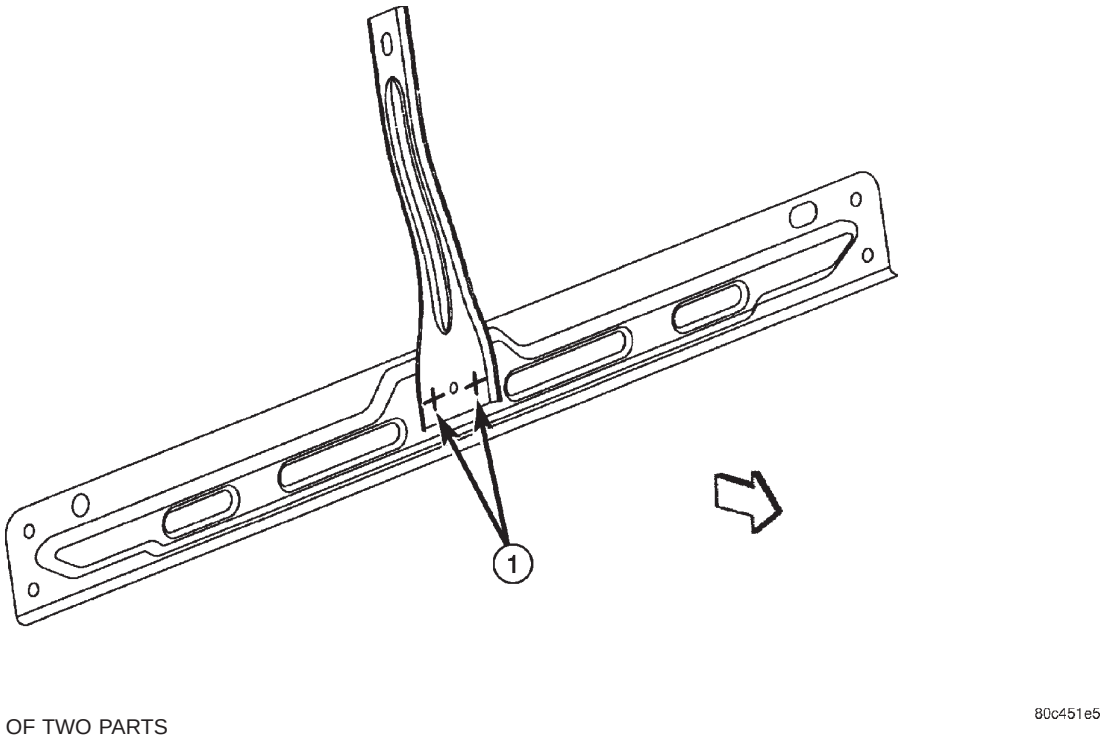

1 - WELDING OF TWO PARTS
2 - WELDING OF THREE PARTS
3 - WELDING OF FOUR PARTS

SPECIFICATIONS (Continued)

COWL TOP TO COWL PLENUM

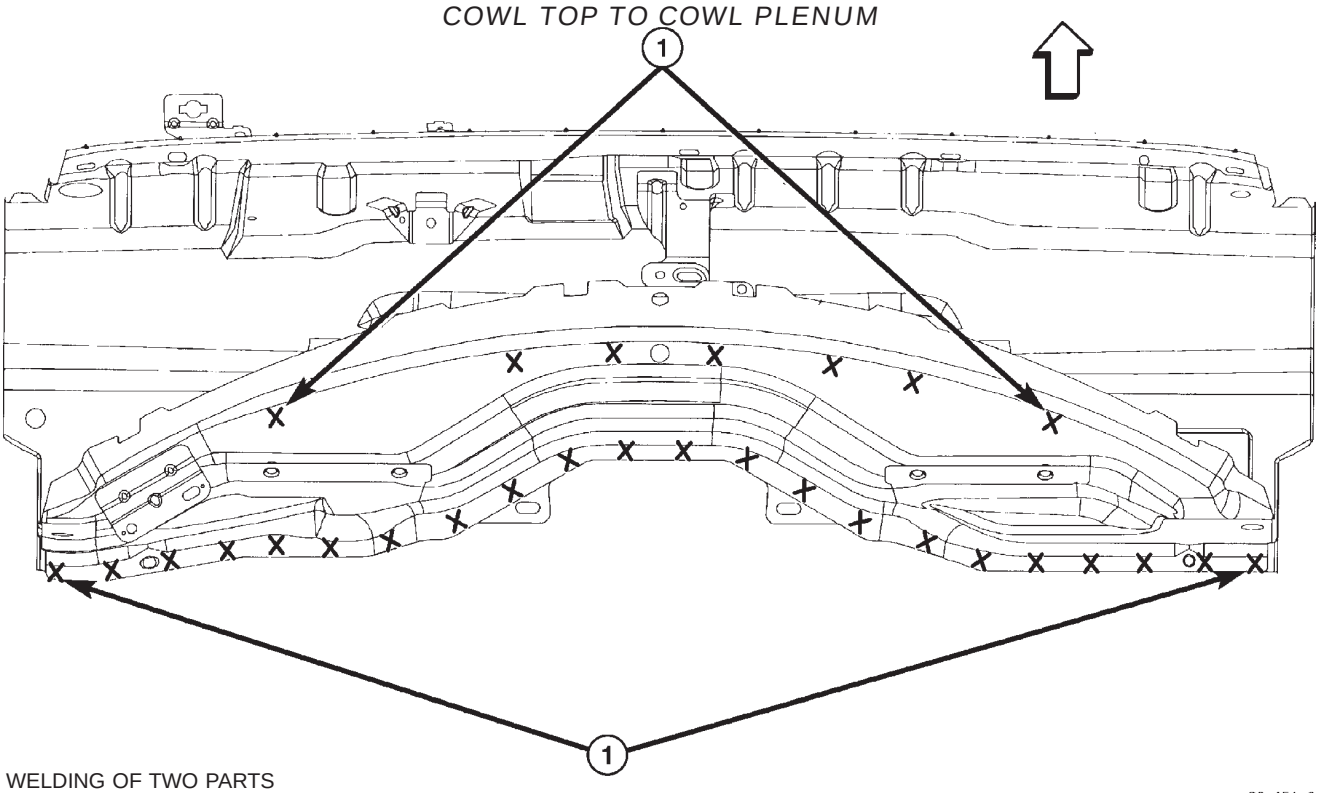

1 - WELDING OF TWO PARTS
2 - WELDING OF THREE PARTS
3 - WELDING OF FOUR PARTS

COWL PLENUM TO DASH PANEL

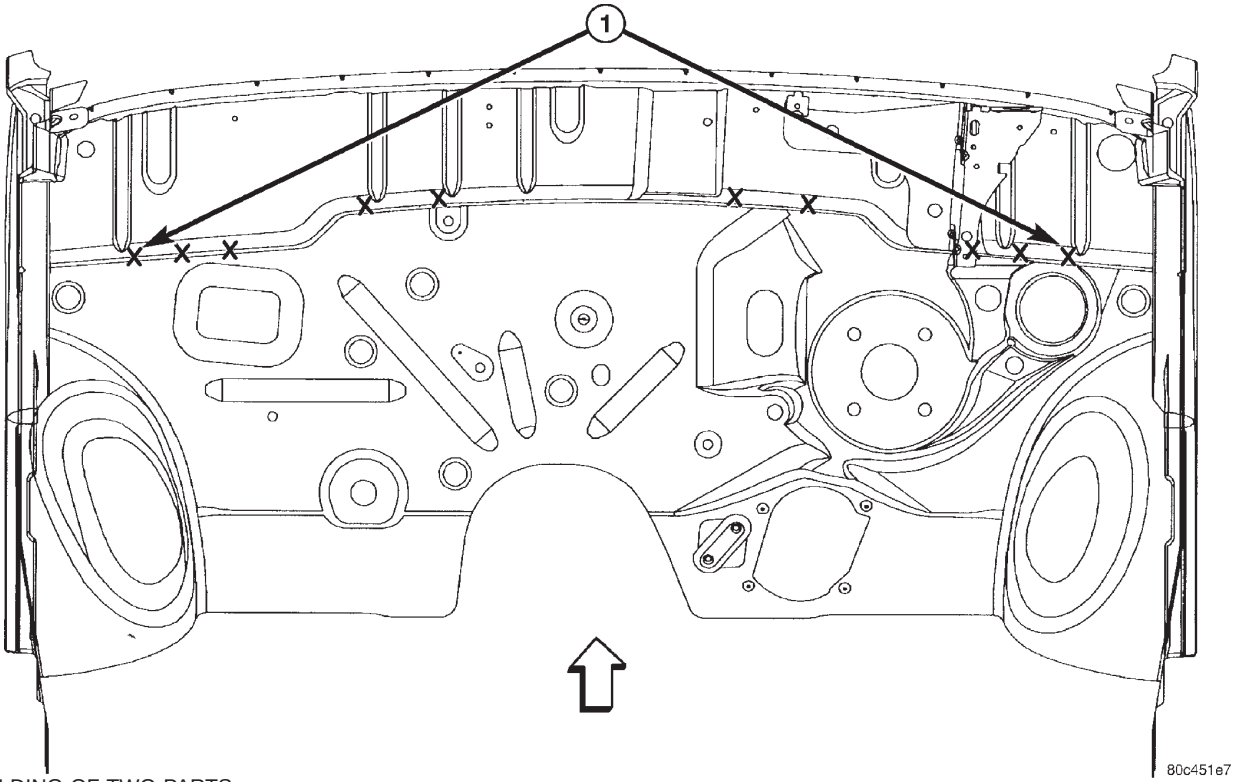

1 - WELDING OF TWO PARTS
2 - WELDING OF THREE PARTS
3 - WELDING OF FOUR PARTS

SPECIFICATIONS (Continued)

COWL PLENUM TO COWL SIDE PANEL

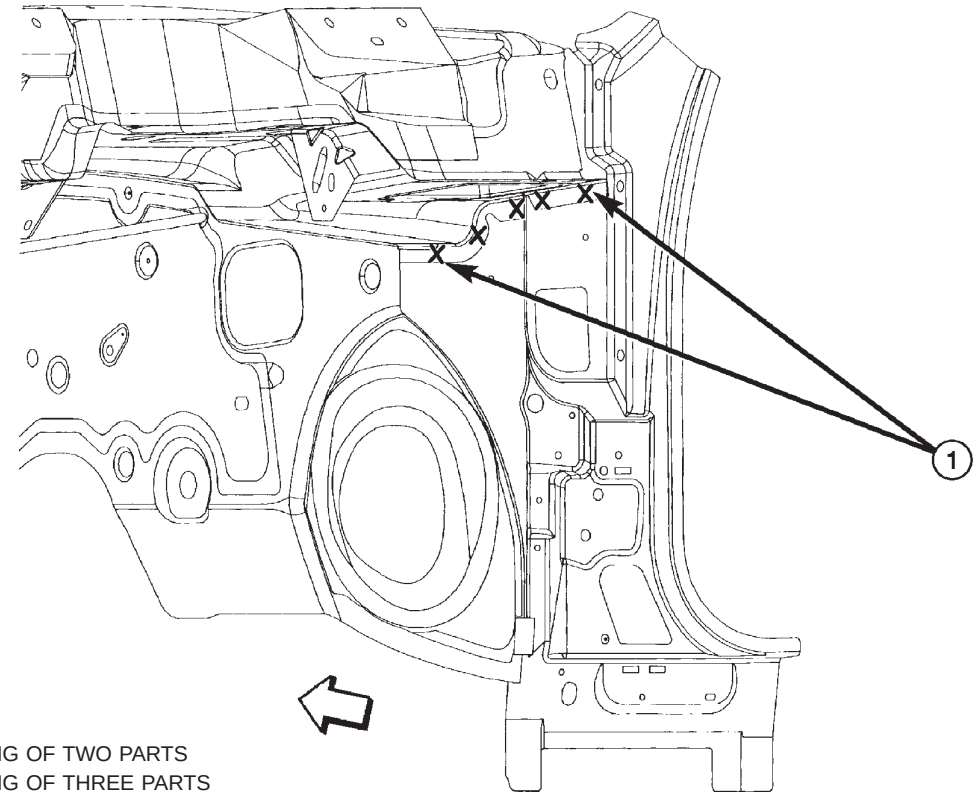

1 - WELDING OF TWO PARTS
2 - WELDING OF THREE PARTS
3 - WELDING OF FOUR PARTS

OUTER LOAD BEAM TO COWL SIDE PANEL

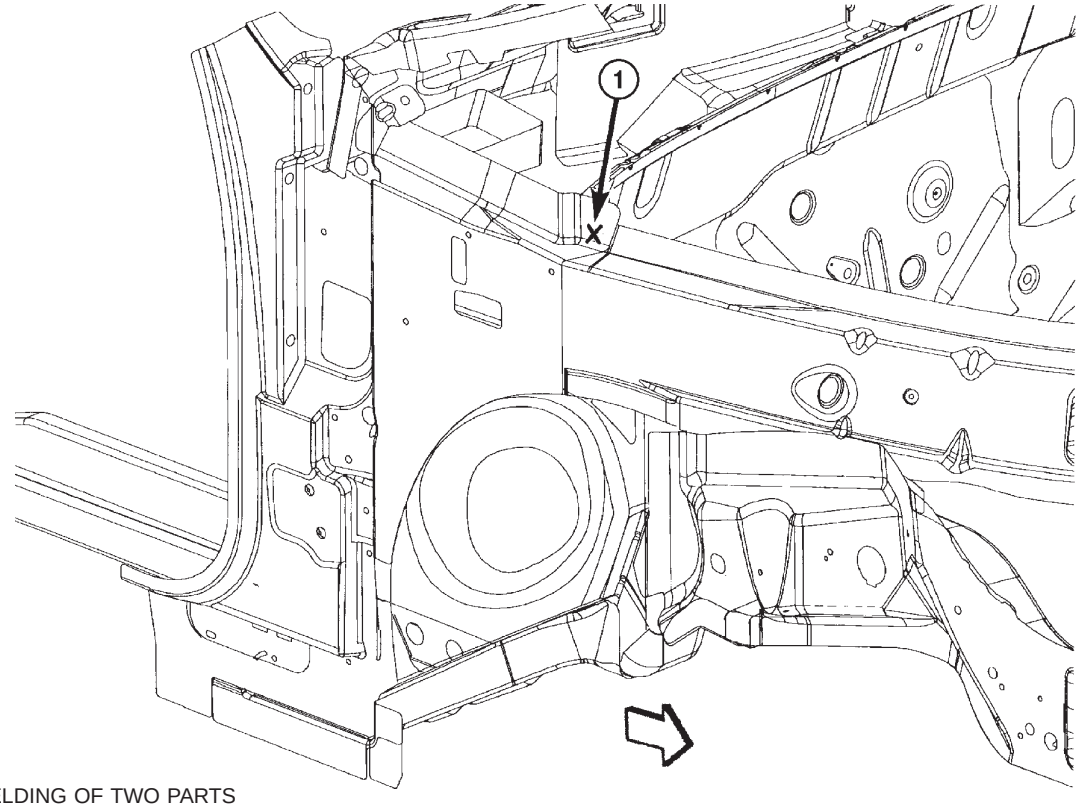

1 - WELDING OF TWO PARTS
2 - WELDING OF THREE PARTS
3 - WELDING OF FOUR PARTS

SPECIFICATIONS (Continued)

INNER LOAD BEAM TO STRUT TOWER AND COWL SIDE PANEL

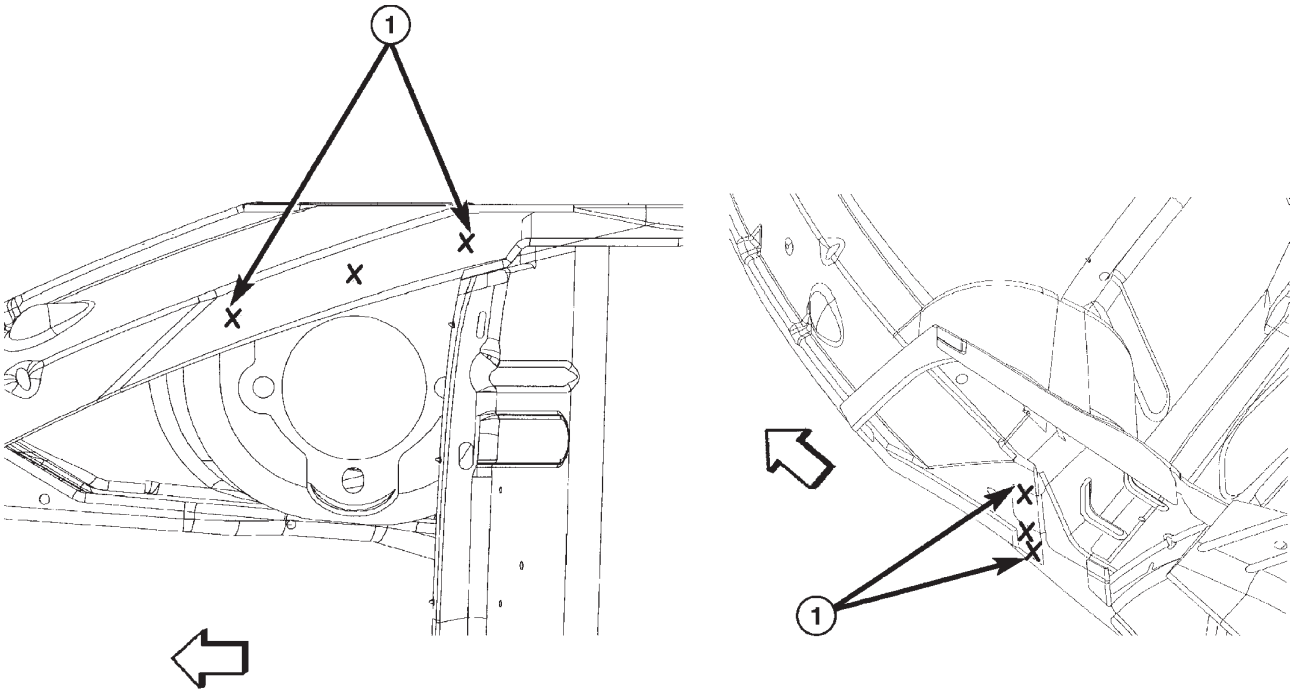

1 - WELDING OF TWO PARTS
2 - WELDING OF THREE PARTS
3 - WELDING OF FOUR PARTS

WINDSHIELD WIPER REINFORCEMENT GUSSET TO COWL PLENUM REINFORCEMENT TO COWL TOP PANEL

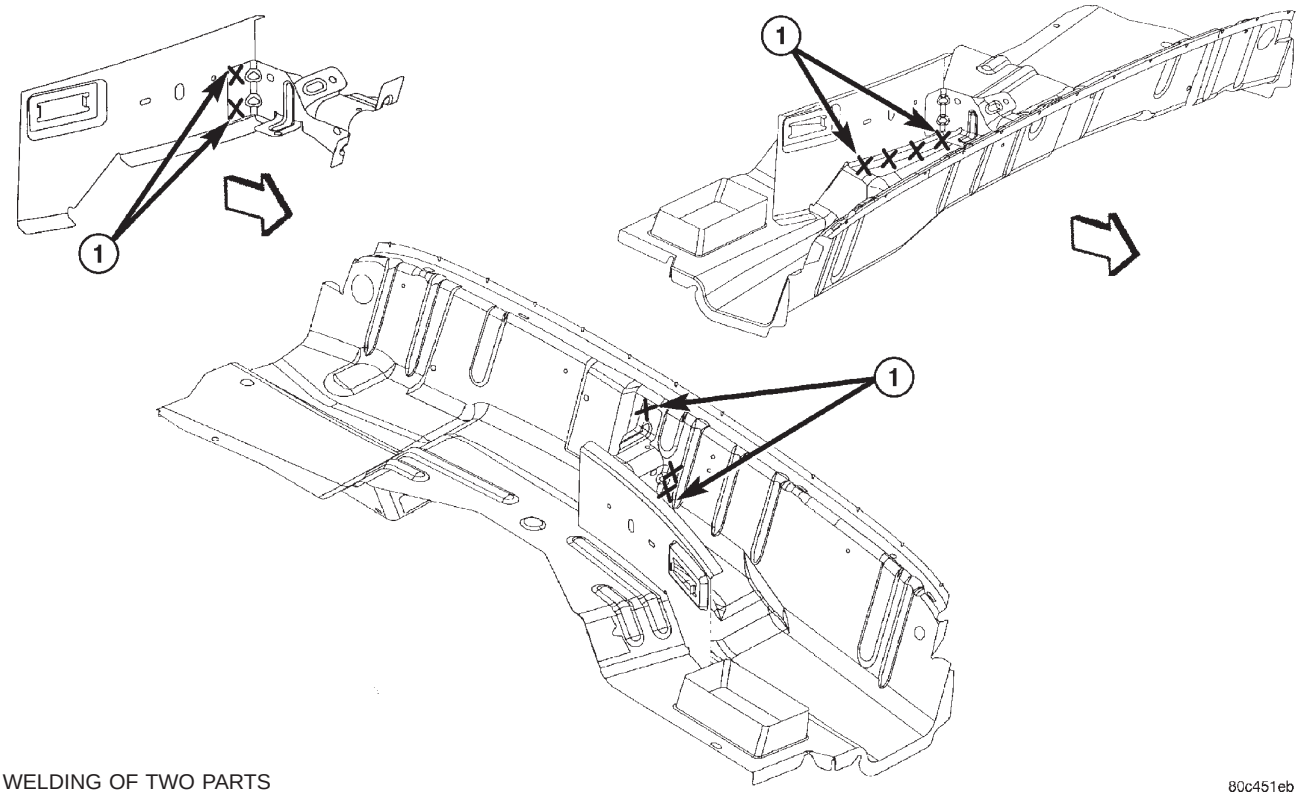

1 - WELDING OF TWO PARTS
2 - WELDING OF THREE PARTS
3 - WELDING OF FOUR PARTS

SPECIFICATIONS (Continued)

INSTRUMENT PANEL REINFORCEMENT TO COWL SIDE PANEL

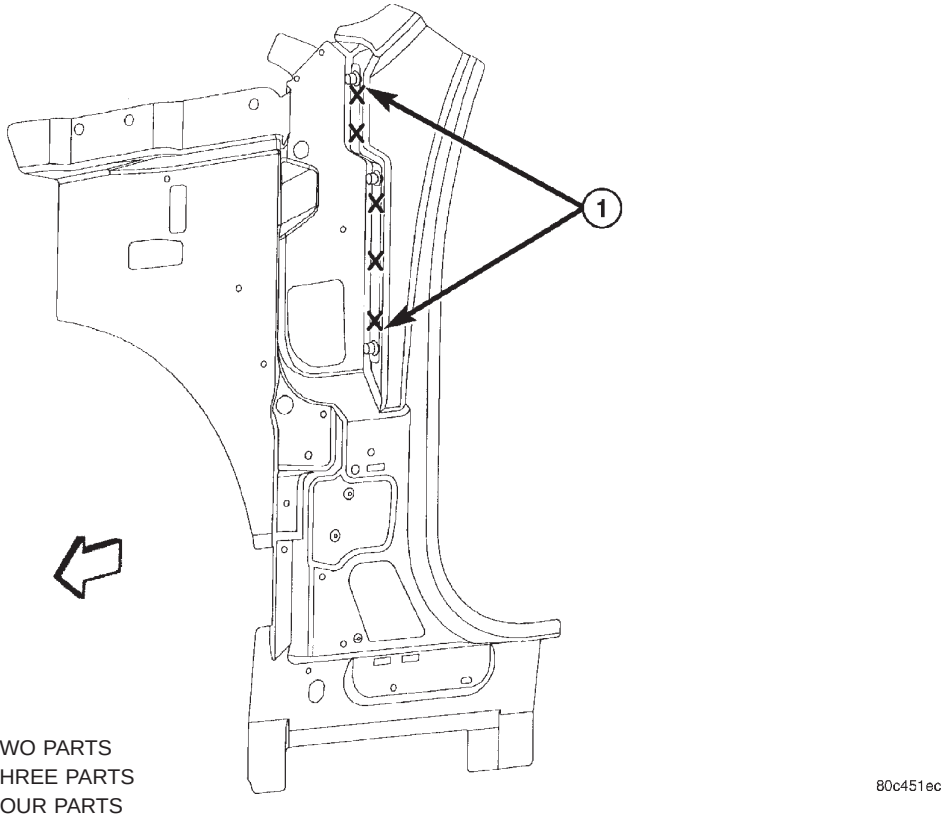

1 - WELDING OF TWO PARTS
2 - WELDING OF THREE PARTS
3 - WELDING OF FOUR PARTS

COWL PLENUM WATER DEFLECTOR TO COWL PLENUM PANEL

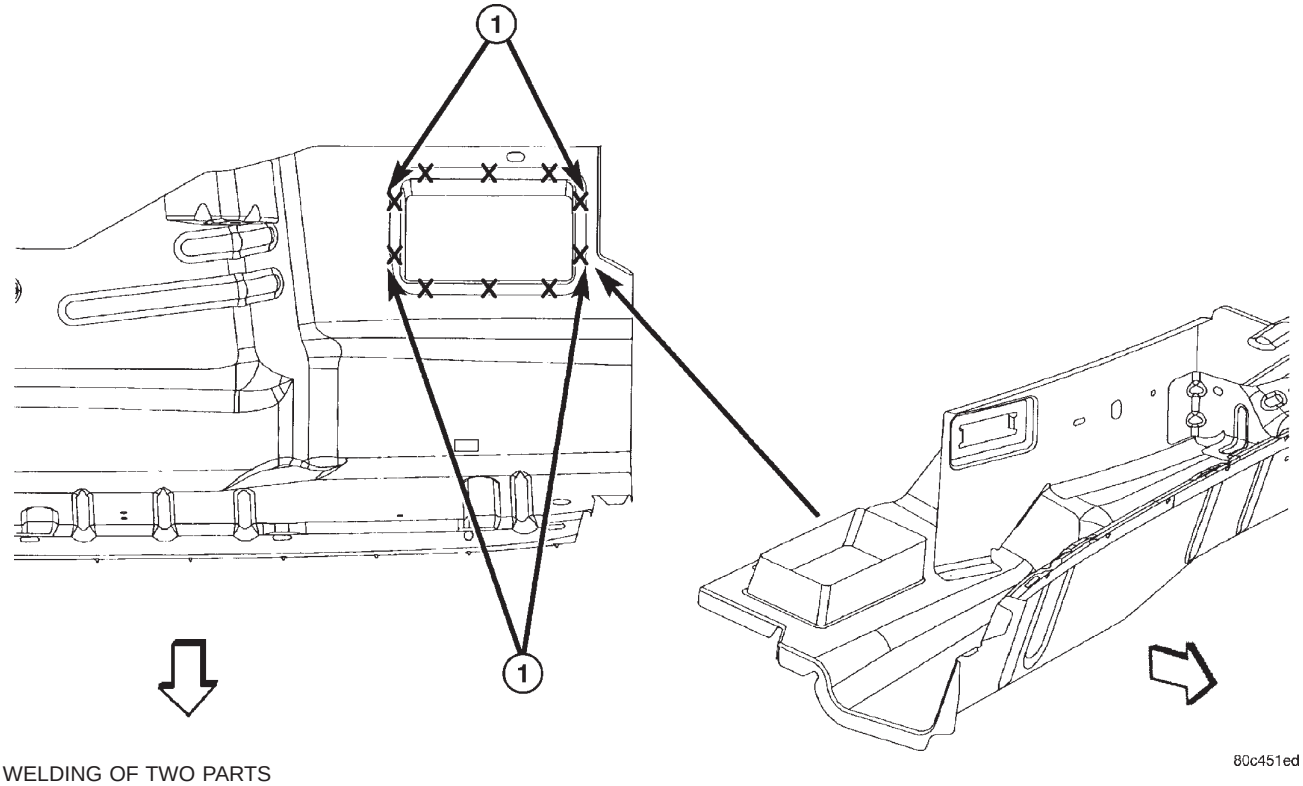

1 - WELDING OF TWO PARTS
2 - WELDING OF THREE PARTS
3 - WELDING OF FOUR PARTS

SPECIFICATIONS (Continued)

LEFT WINDSHIELD WIPER ATTACHING BRACKET TO COWL PLENUM

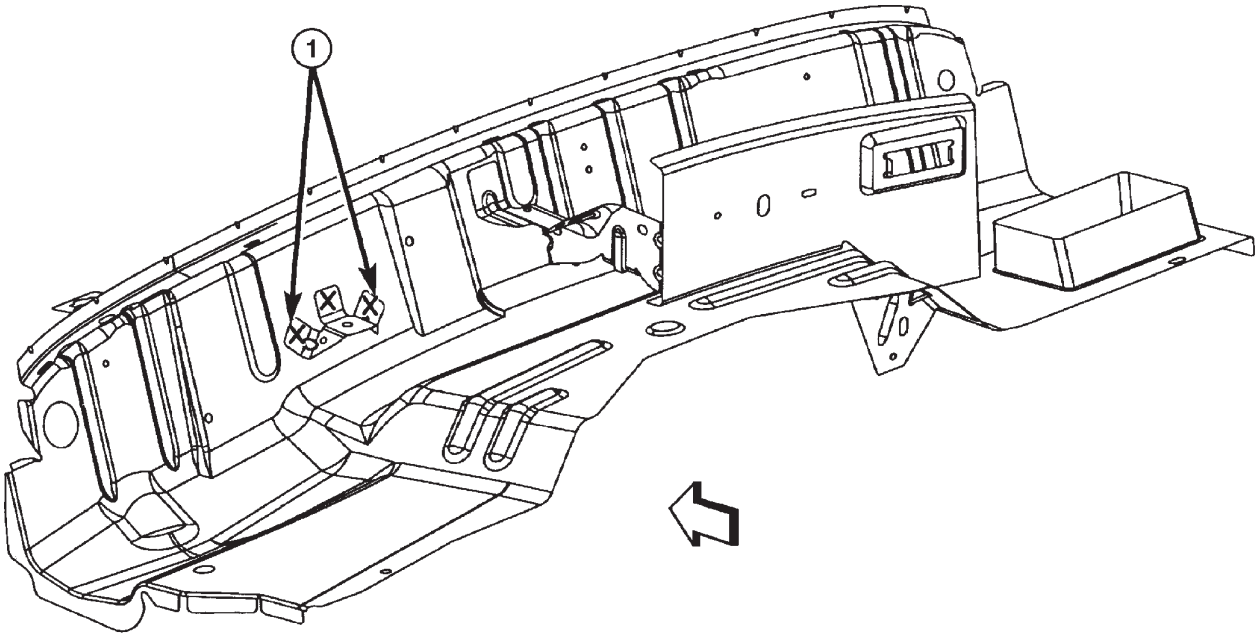

1 - WELDING OF TWO PARTS
2 - WELDING OF THREE PARTS
3 - WELDING OF FOUR PARTS

80c451ee

BRAKE PEDAL SUPPORT BRACKET TO COWL PLENUM

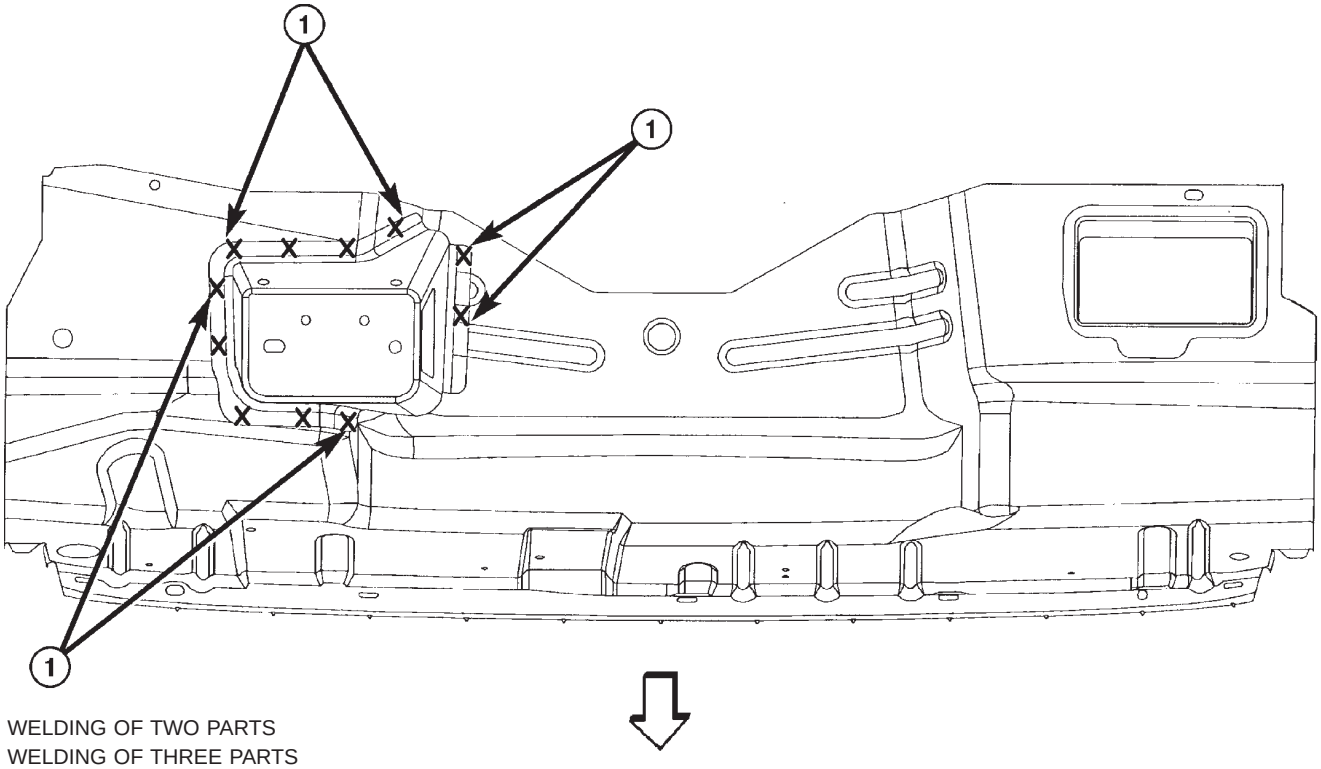

1 - WELDING OF TWO PARTS
2 - WELDING OF THREE PARTS
3 - WELDING OF FOUR PARTS

80c451ef

SPECIFICATIONS (Continued)

WELD LOCATIONS – FRONT FENDER ASSEMBLY

HEADLAMP CLOSURE PANEL AND HINGE PILLAR REINFORCEMENT

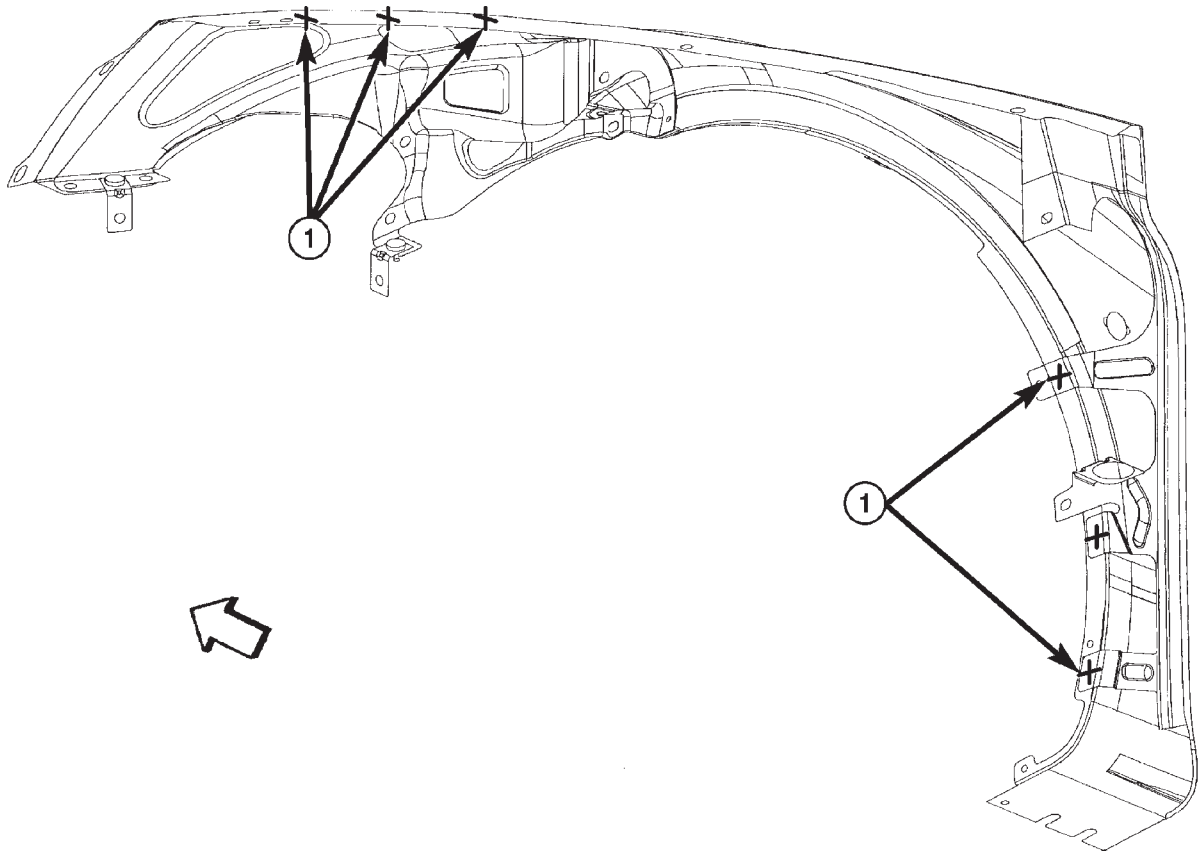

1 - WELDING OF TWO PARTS
2 - WELDING OF THREE PARTS
3 - WELDING OF FOUR PARTS

SPECIFICATIONS (Continued)

WELD LOCATIONS – BODY SIDE APERTURE

A-PILLAR WEATHERSTRIP RETAINER TO BODY SIDE APERTURE PANEL

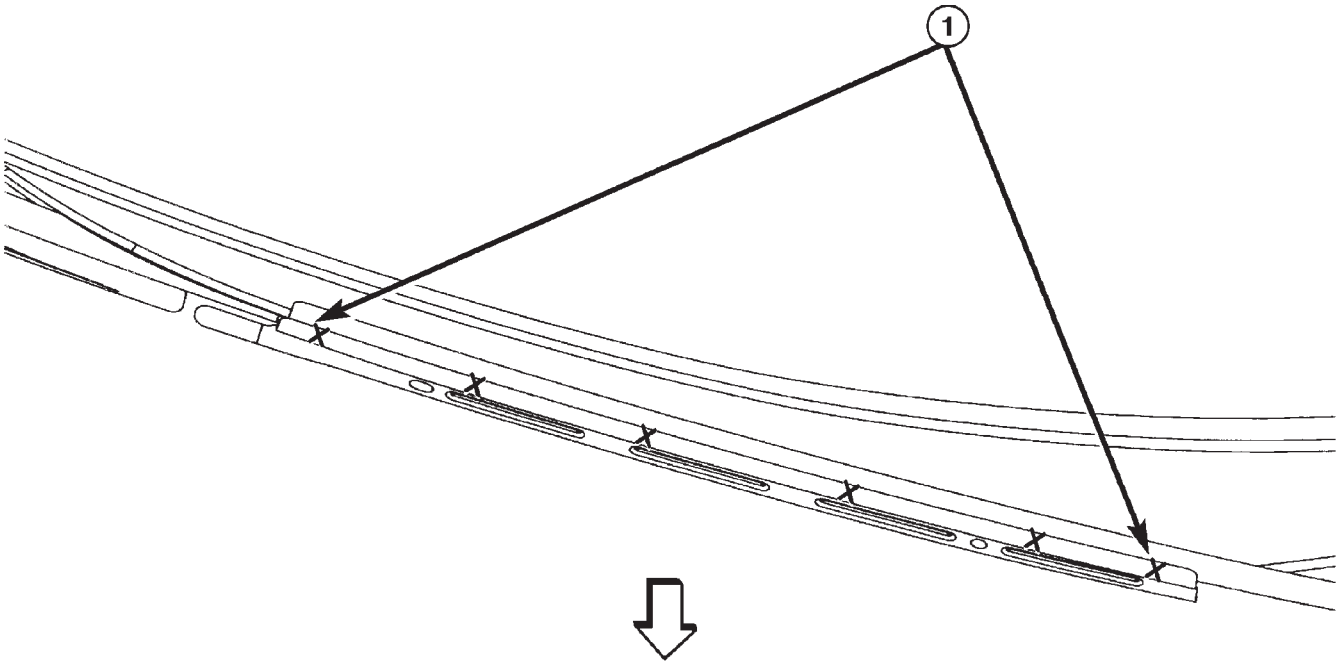

1. WELDING OF TWO PARTS
2. WELDING OF THREE PARTS
3. WELDING OF FOUR PARTS

LIFTGATE SIDE DRAIN TROUGH TO BODY SIDE APERTURE PANEL

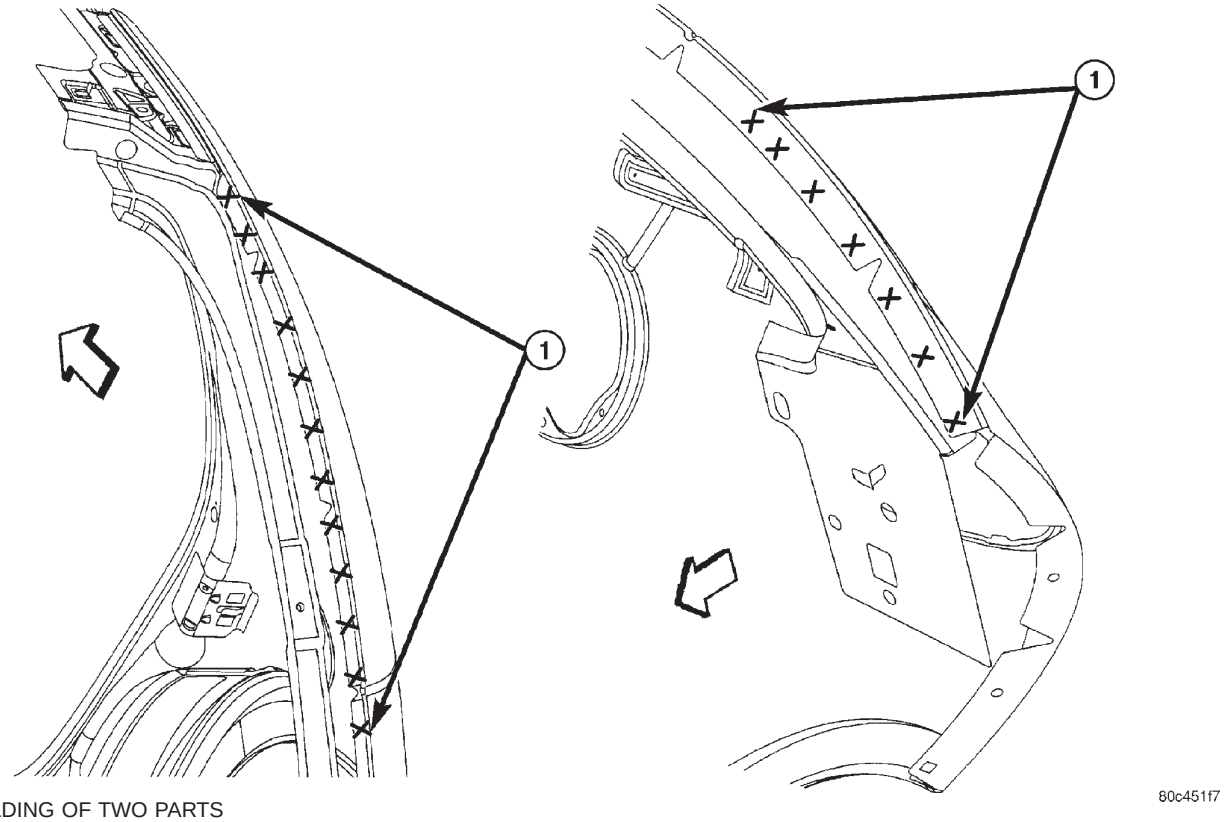

1. WELDING OF TWO PARTS
2. WELDING OF THREE PARTS
3. WELDING OF FOUR PARTS

SPECIFICATIONS (Continued)

INNER ROOF SIDE RAIL REINFORCEMENT TO BODY SIDE APERTURE PANEL

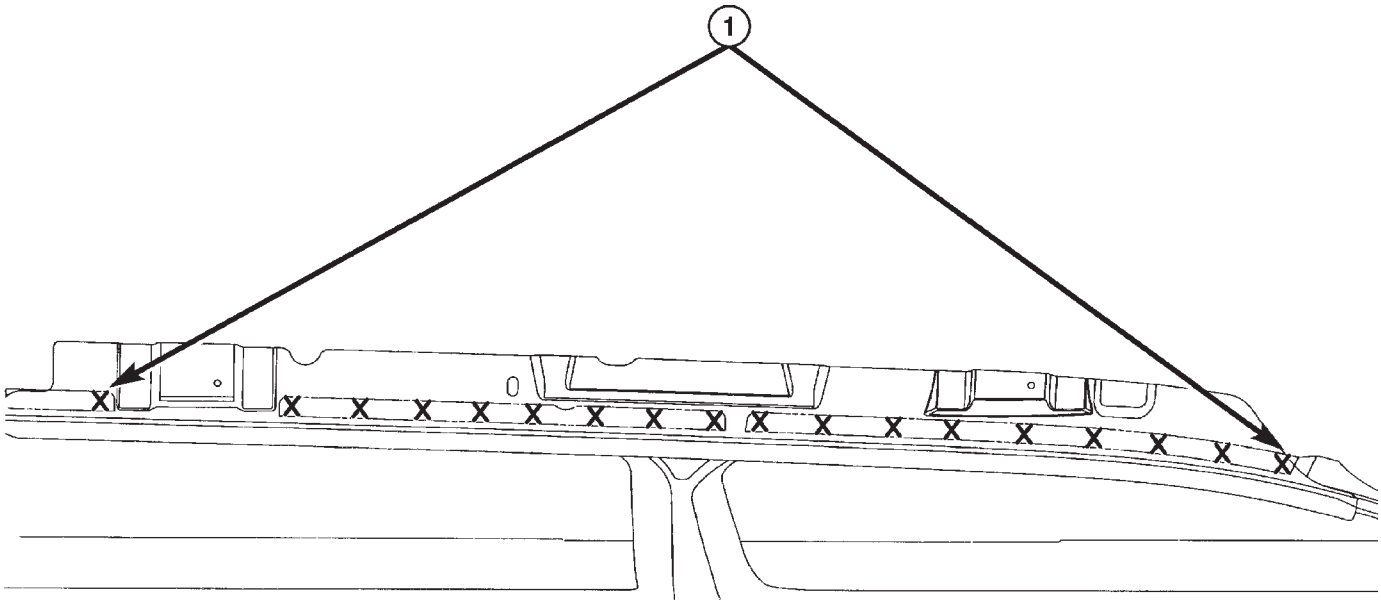

1. WELDING OF TWO PARTS
2. WELDING OF THREE PARTS
3. WELDING OF FOUR PARTS

80c451f8

FRONT HINGE PILLAR TO BODY SIDE APERTURE PANEL

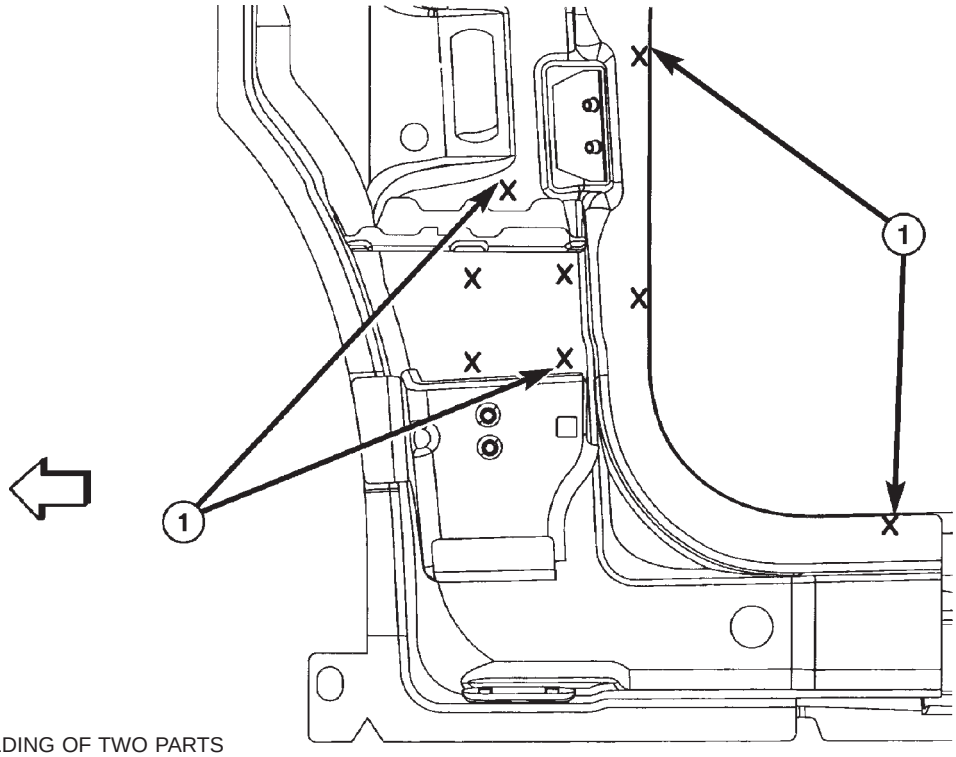

1. WELDING OF TWO PARTS
2. WELDING OF THREE PARTS
3. WELDING OF FOUR PARTS

80c451f9

SPECIFICATIONS (Continued)

INNER WINDSHIELD SIDE FRAME TO BODY SIDE APERTURE PANEL

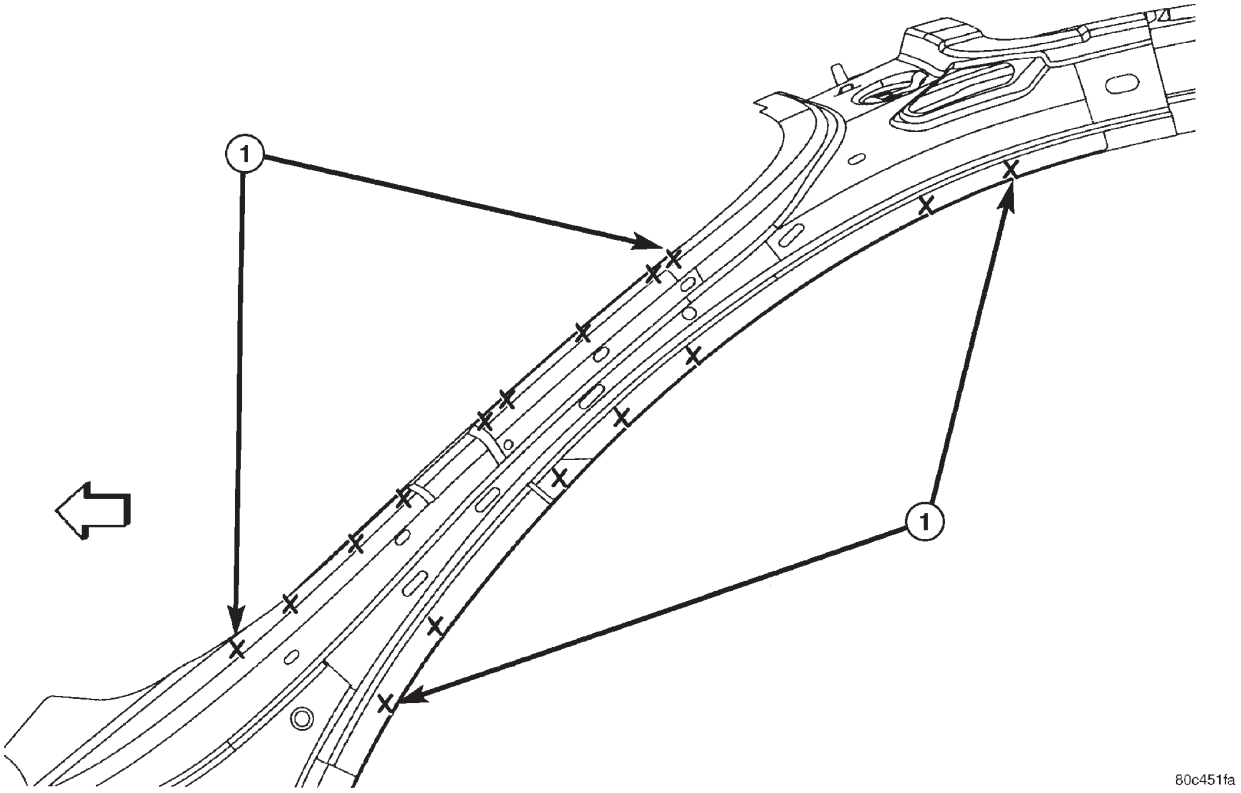

1. WELDING OF TWO PARTS
2. WELDING OF THREE PARTS
3. WELDING OF FOUR PARTS

D-PILLAR UPPER REINFORCEMENT TO BODY SIDE APERTURE PANEL, ROOF RAIL SIDE REINFORCEMENT AND INNER QUARTER PANEL

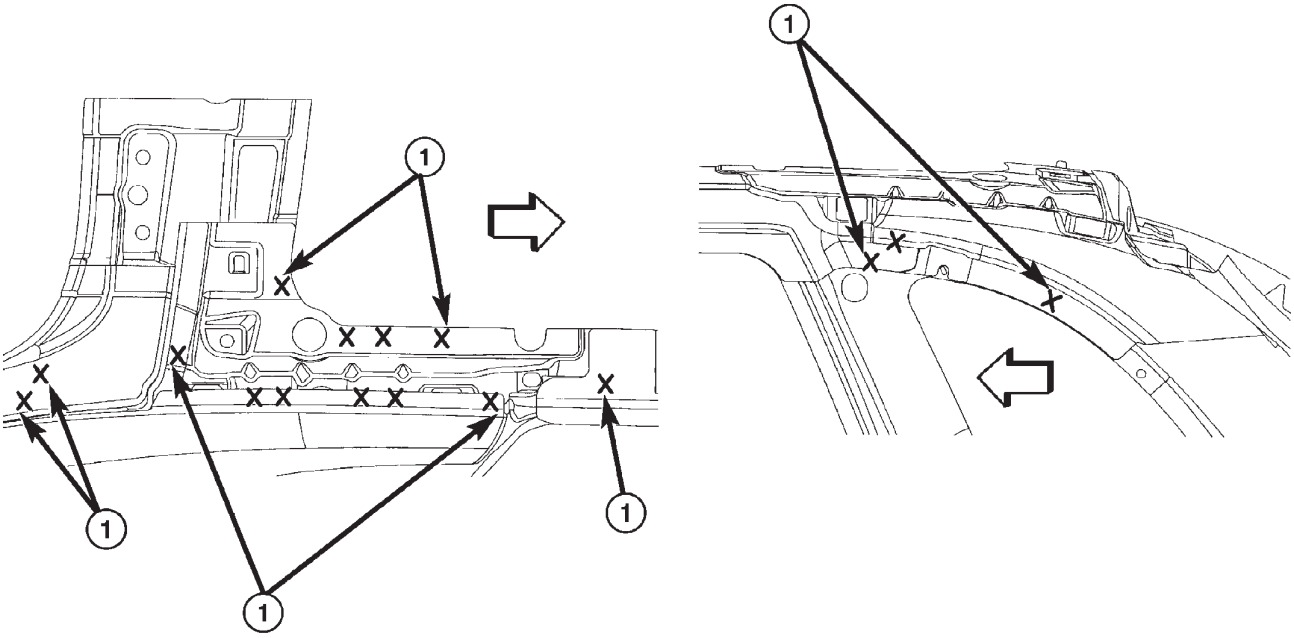

1. WELDING OF TWO PARTS
2. WELDING OF THREE PARTS
3. WELDING OF FOUR PARTS

SPECIFICATIONS (Continued)

INNER QUARTER PANEL TAIL LAMP REINFORCEMENT TO BODY SIDE APERTURE PANEL

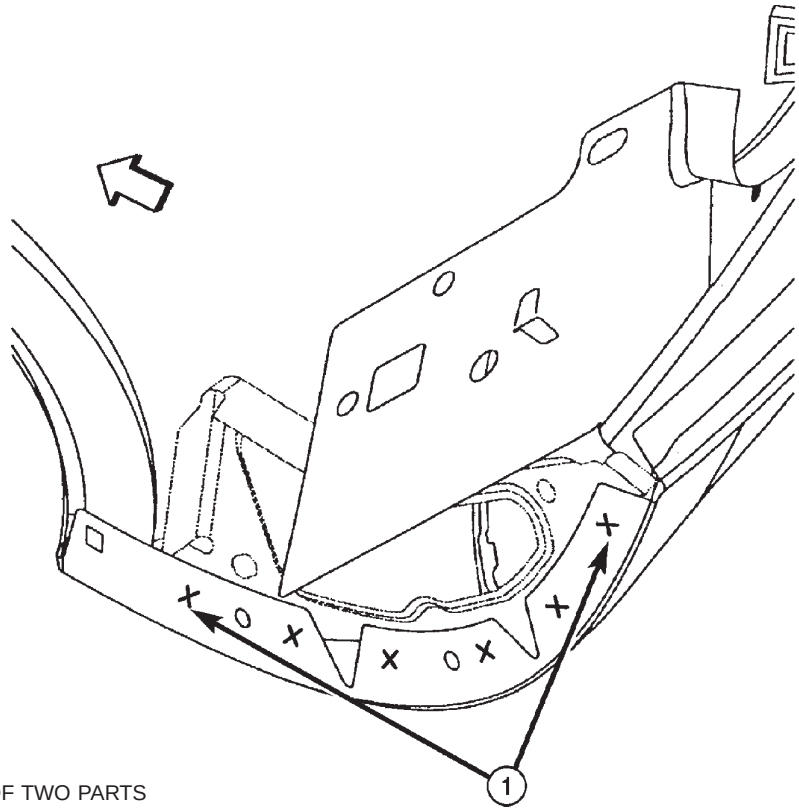

1. WELDING OF TWO PARTS
2. WELDING OF THREE PARTS
3. WELDING OF FOUR PARTS

80c451fc

INNER QUARTER PANEL TO BODY SIDE APERTURE PANEL

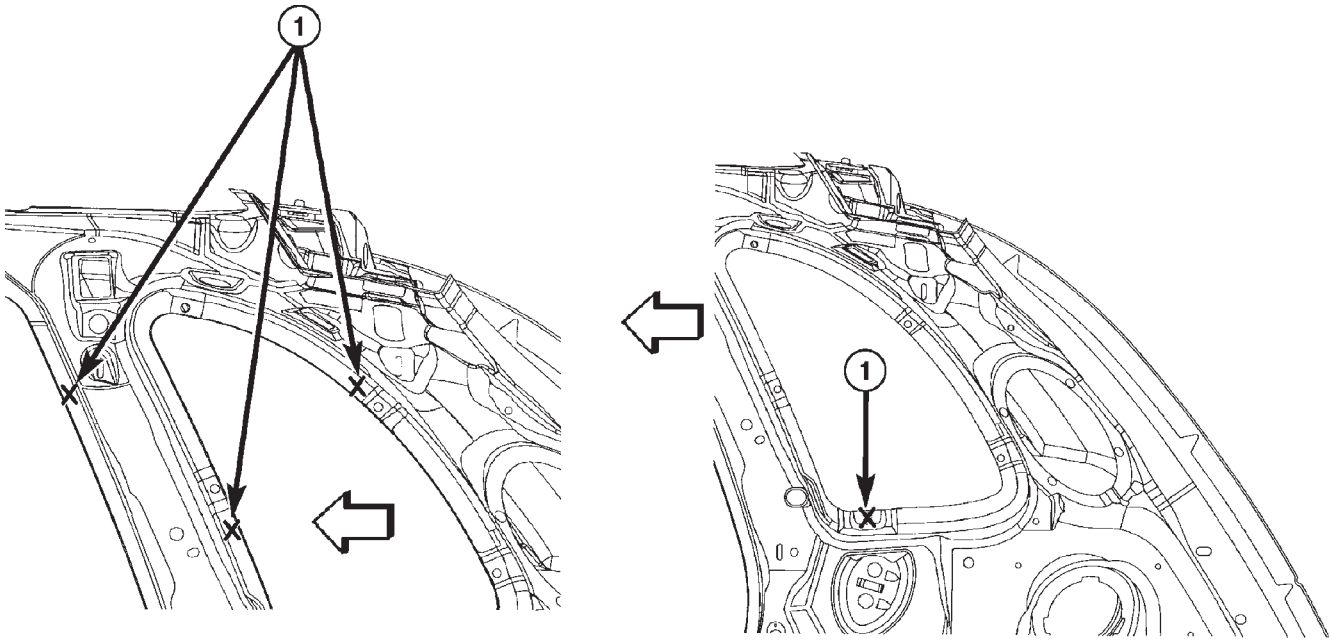

1. WELDING OF TWO PARTS
2. WELDING OF THREE PARTS
3. WELDING OF FOUR PARTS

80c451fe

SPECIFICATIONS (Continued)

LATCH STRIKER REINFORCEMENT TO BODY SIDE APERTURE PANEL

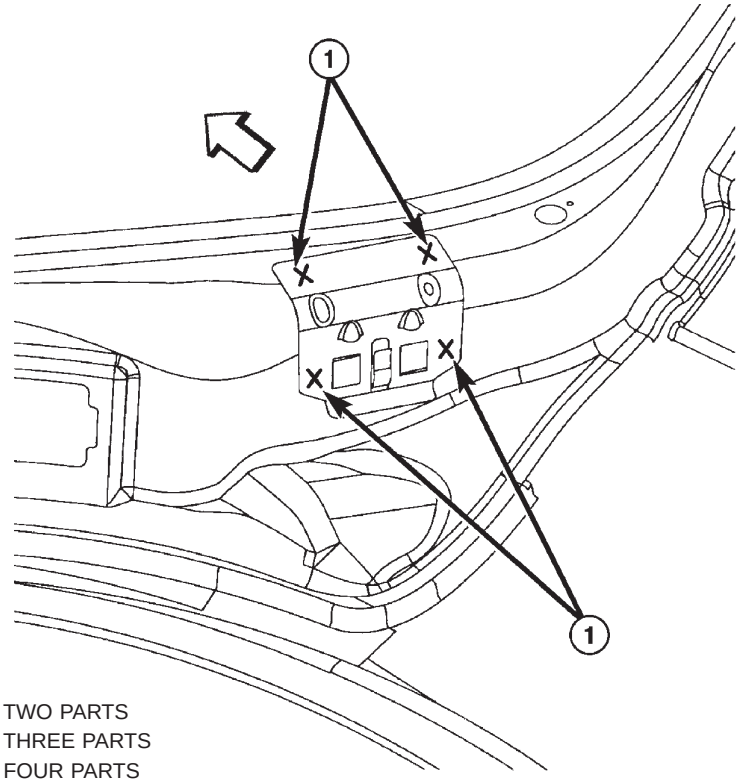

1. WELDING OF TWO PARTS
2. WELDING OF THREE PARTS
3. WELDING OF FOUR PARTS

80c451ff

B-PILLAR REINFORCEMENT TO BODY SIDE APERTURE PANEL

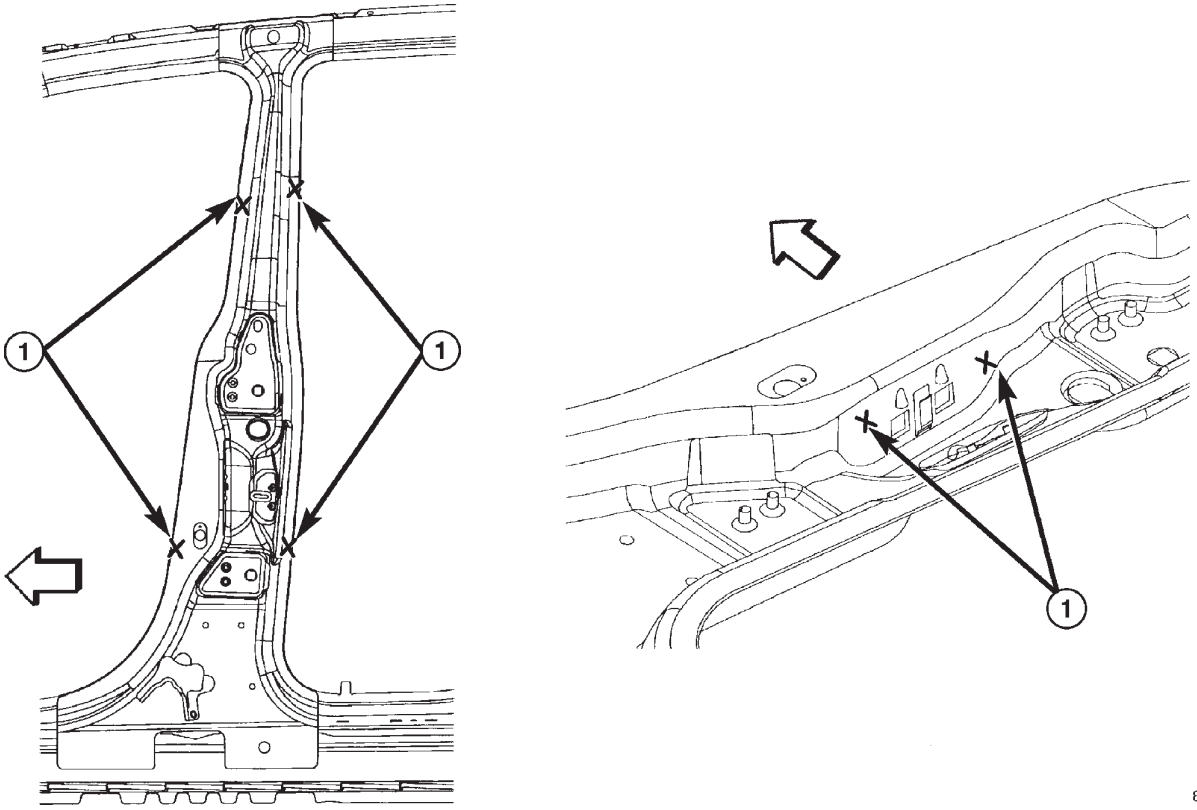

80c45200

1. WELDING OF TWO PARTS
2. WELDING OF THREE PARTS
3. WELDING OF FOUR PARTS

SPECIFICATIONS (Continued)

OUTER LOAD BEAM TO FRONT HINGE PILLAR

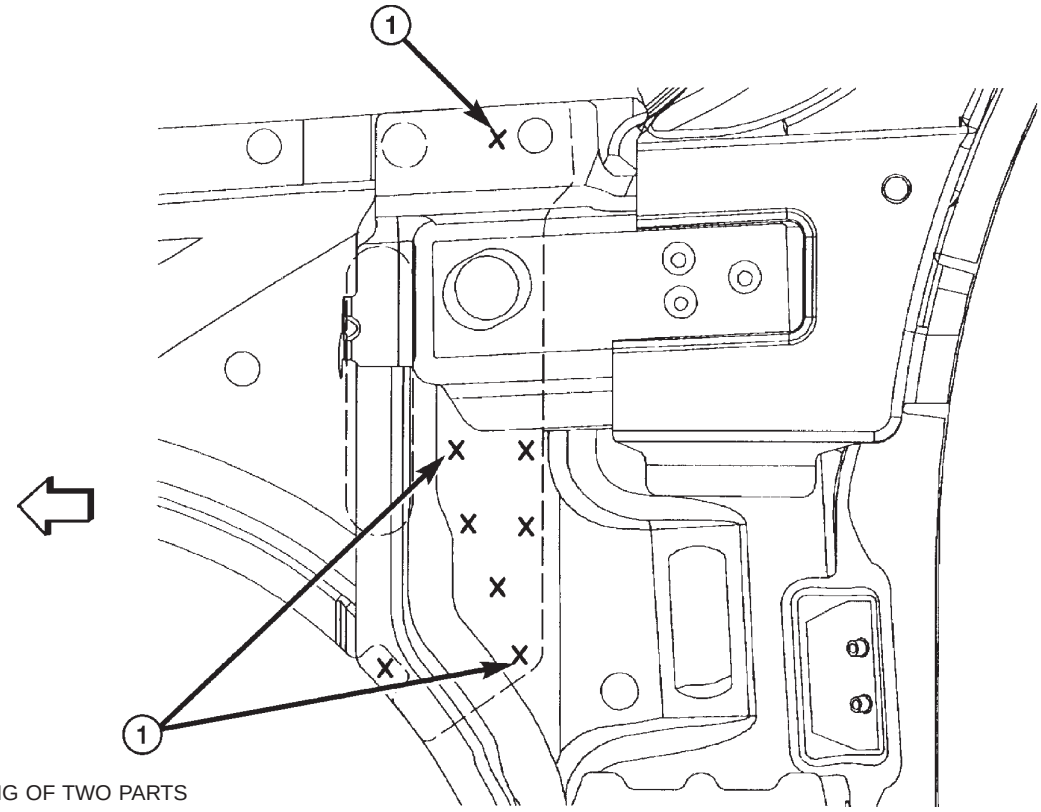

1. WELDING OF TWO PARTS
2. WELDING OF THREE PARTS
3. WELDING OF FOUR PARTS

INNER B-PILLAR TO B-PILLAR REINFORCEMENT AND BODY SIDE APERTURE PANEL

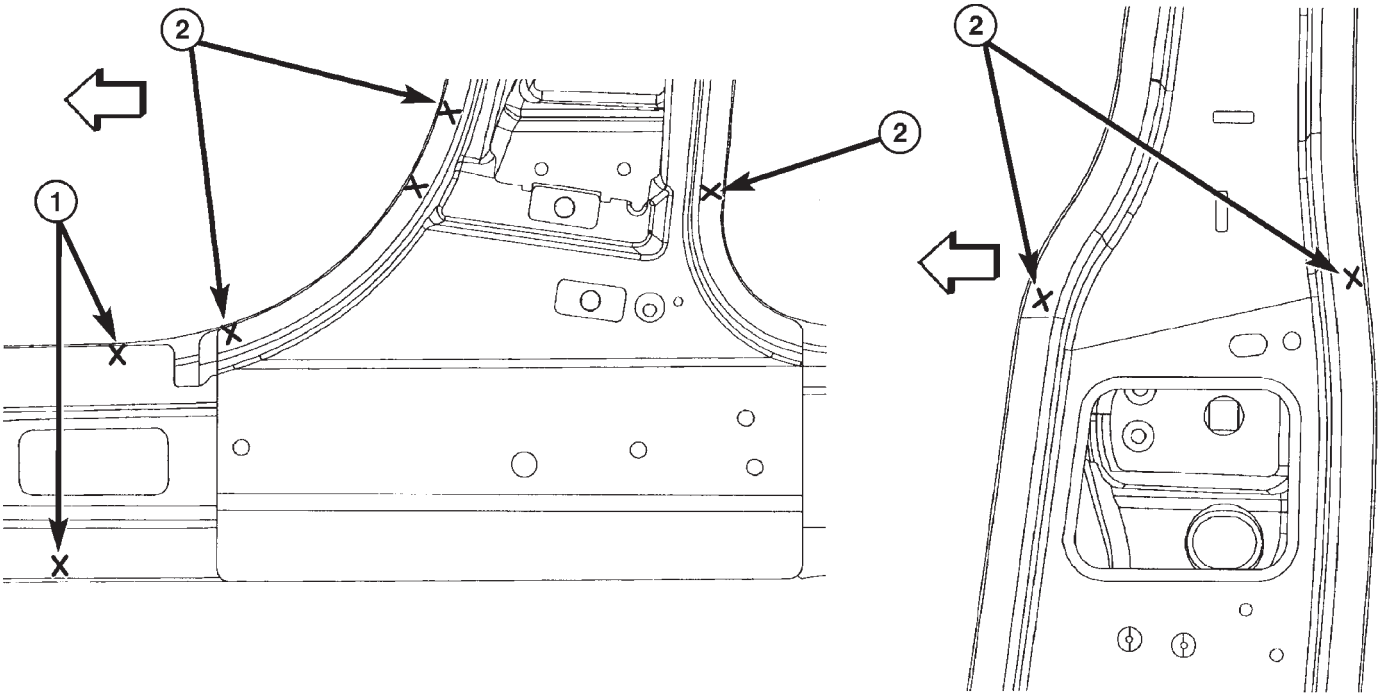

1. WELDING OF TWO PARTS
2. WELDING OF THREE PARTS
3. WELDING OF FOUR PARTS

SPECIFICATIONS (Continued)

INNER QUARTER PANEL TO LIFTGATE SIDE DRAIN TROUGH

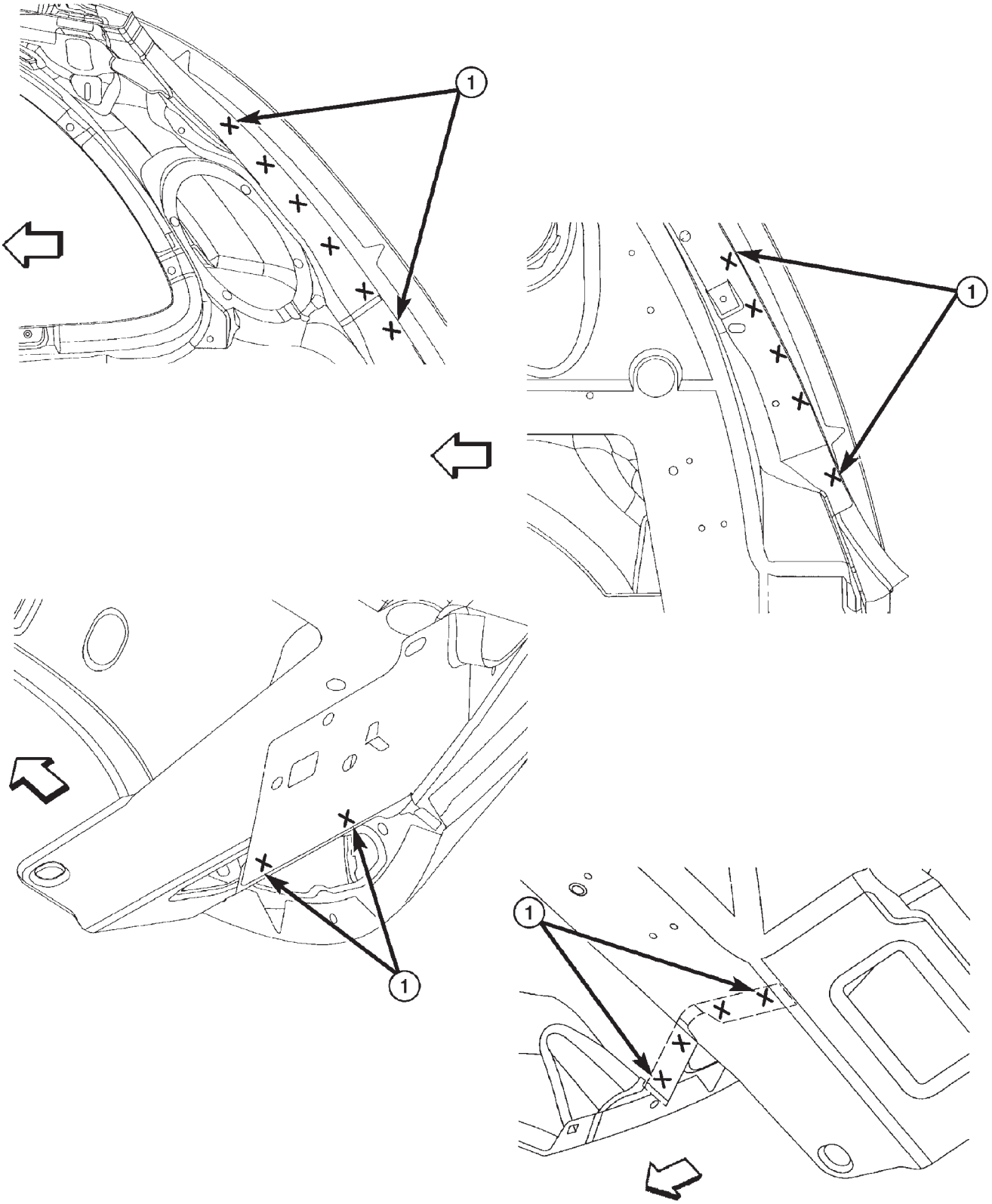

1. WELDING OF TWO PARTS
2. WELDING OF THREE PARTS
3. WELDING OF FOUR PARTS

SPECIFICATIONS (Continued)

WINDSHIELD OUTER FRAME AND LOWER HINGE PLATE TO FRONT HINGE PILLAR

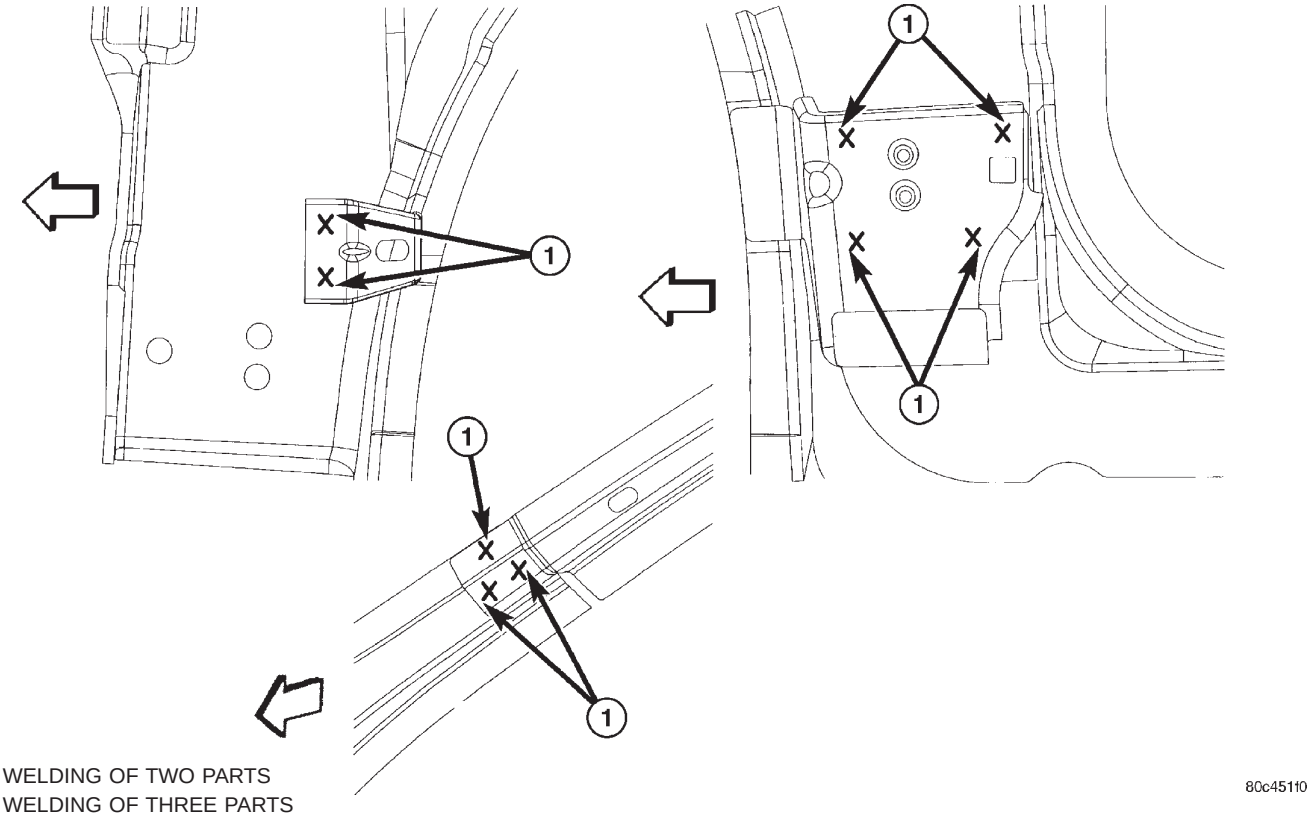

1. WELDING OF TWO PARTS
2. WELDING OF THREE PARTS
3. WELDING OF FOUR PARTS

INNER WINDSHIELD FRAME AND UPPER HINGE BRACKET TO FRONT HINGE PILLAR

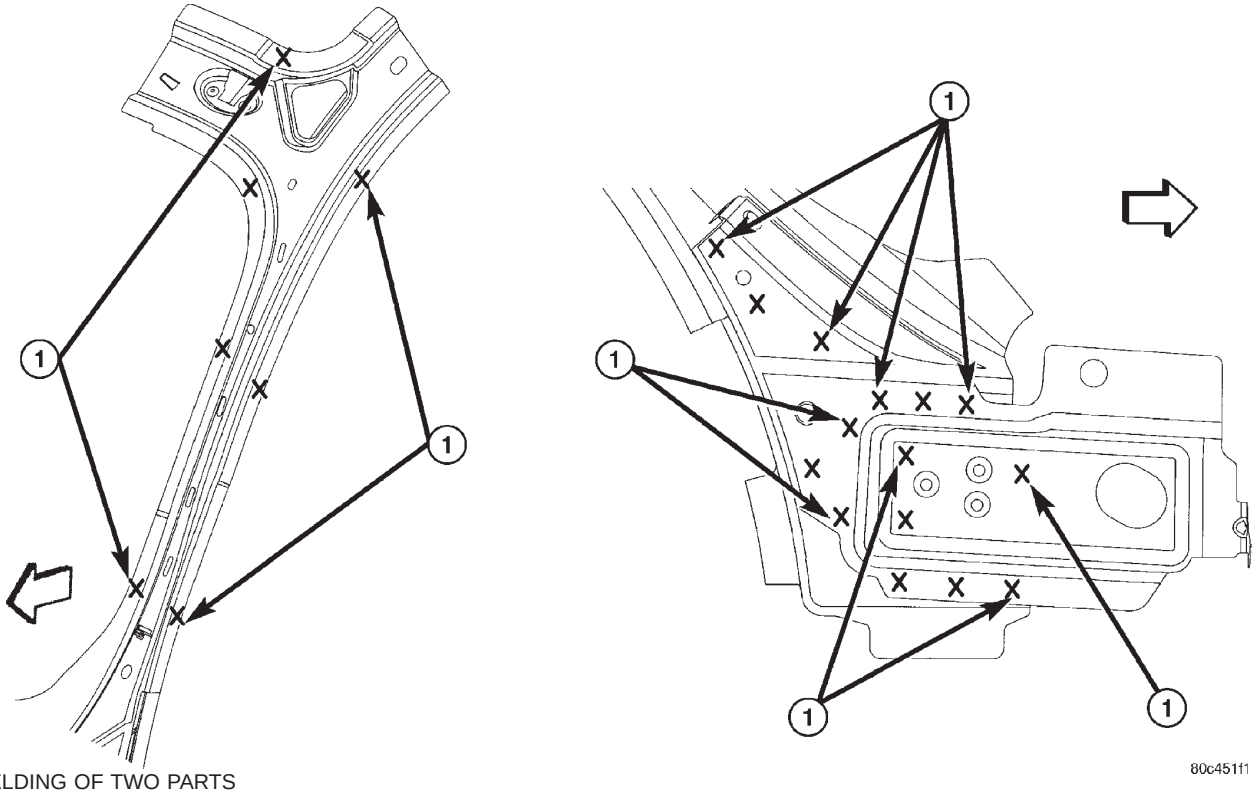

1. WELDING OF TWO PARTS
2. WELDING OF THREE PARTS
3. WELDING OF FOUR PARTS

SPECIFICATIONS (Continued)

INNER B-PILLAR TO INNER ROOF SIDE REINFORCEMENT

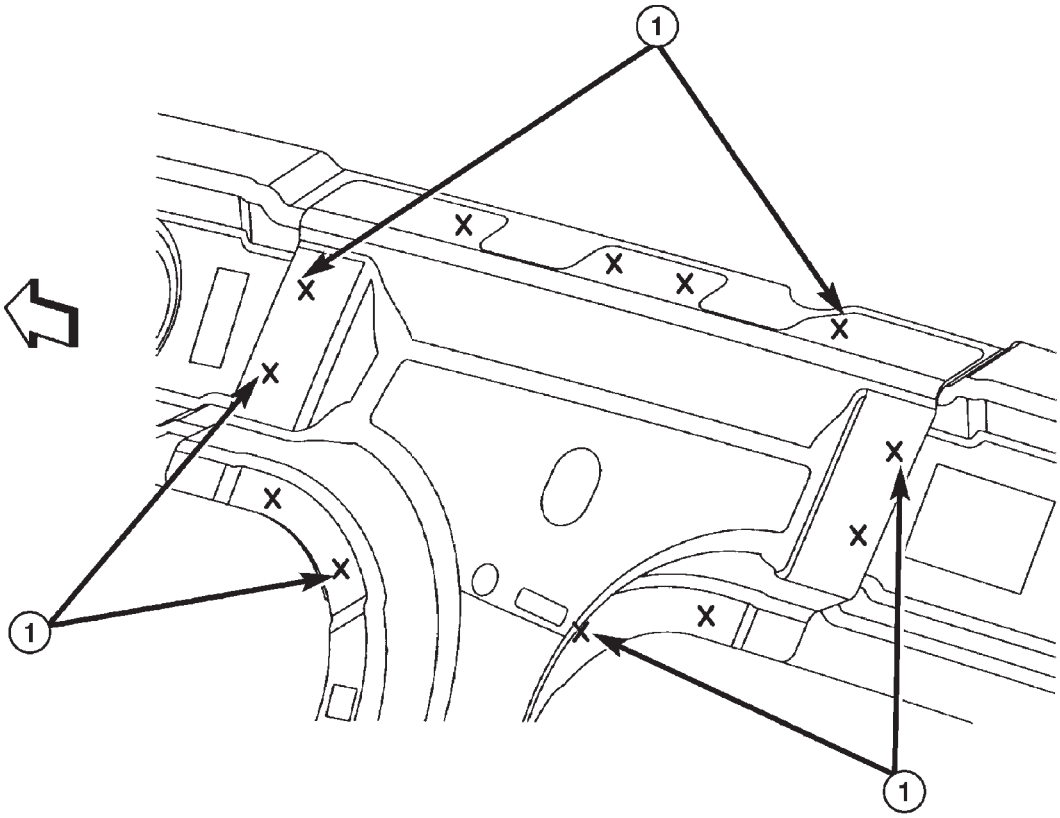

1. WELDING OF TWO PARTS
2. WELDING OF THREE PARTS
3. WELDING OF FOUR PARTS

SPECIFICATIONS (Continued)

RIGHT/LEFT INNER WHEELHOUSE TO INNER QUARTER PANEL

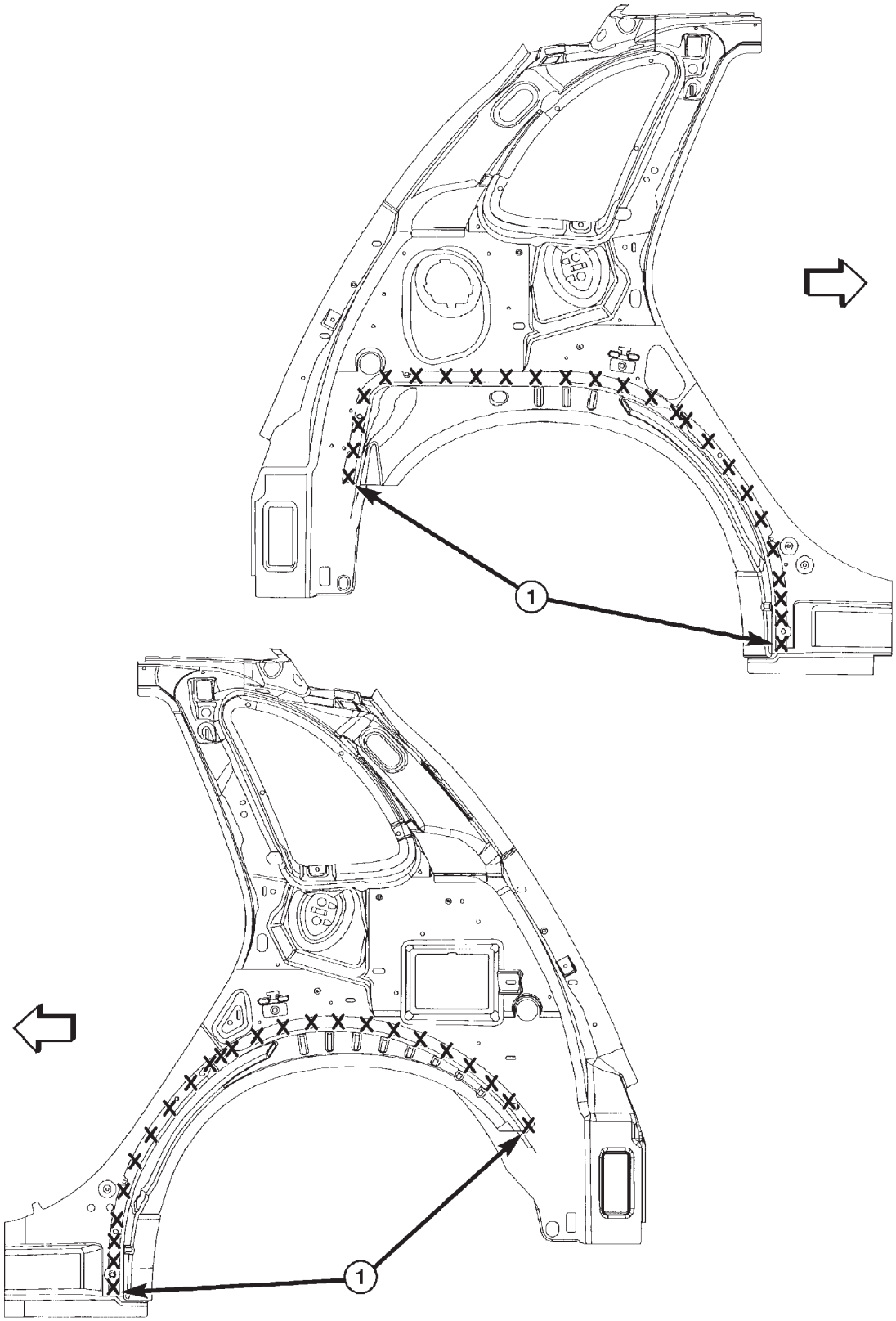

80c45113

1. WELDING OF TWO PARTS
2. WELDING OF THREE PARTS
3. WELDING OF FOUR PARTS

SPECIFICATIONS (Continued)

UPPER INNER C-PILLAR TO INNER QUARTER PANEL

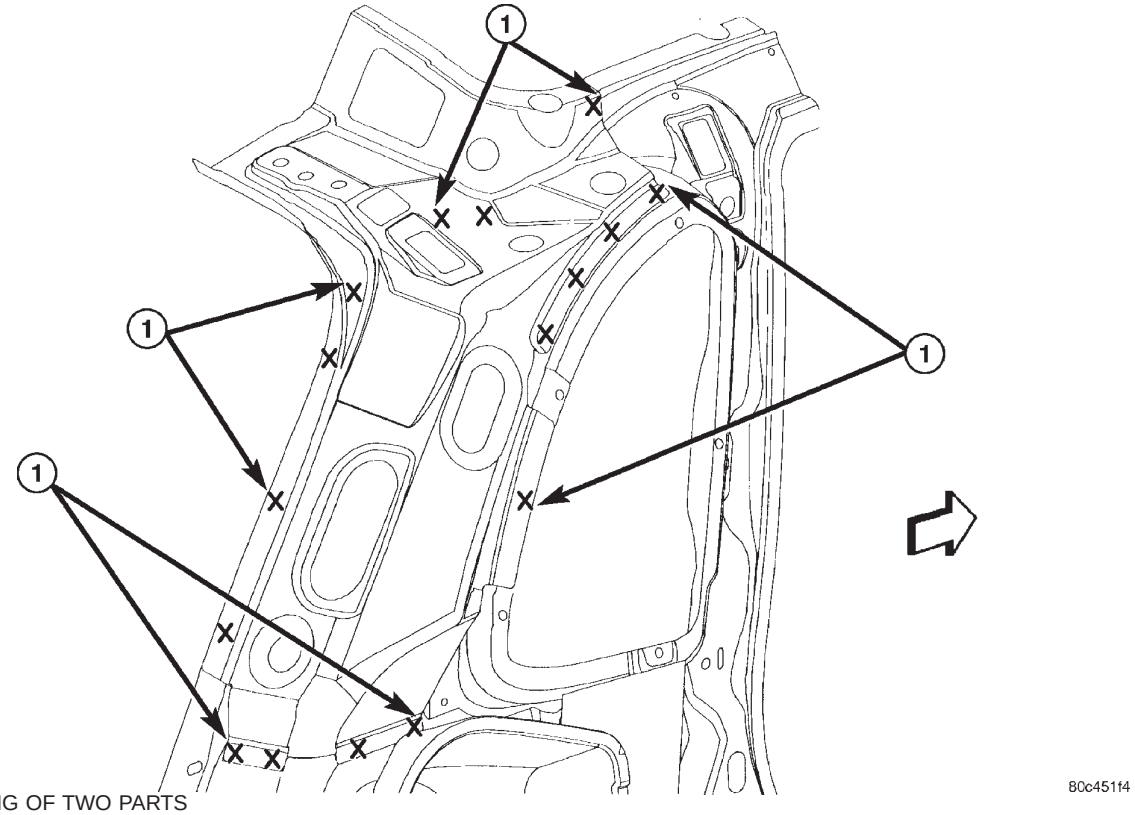

1. WELDING OF TWO PARTS
2. WELDING OF THREE PARTS
3. WELDING OF FOUR PARTS

FUEL FILLER HOUSING, SEAT BACK REINFORCEMENT, SEAT BELT ANCHOR AND JACK PANEL REINFORCEMENT TO INNER QUARTER PANEL

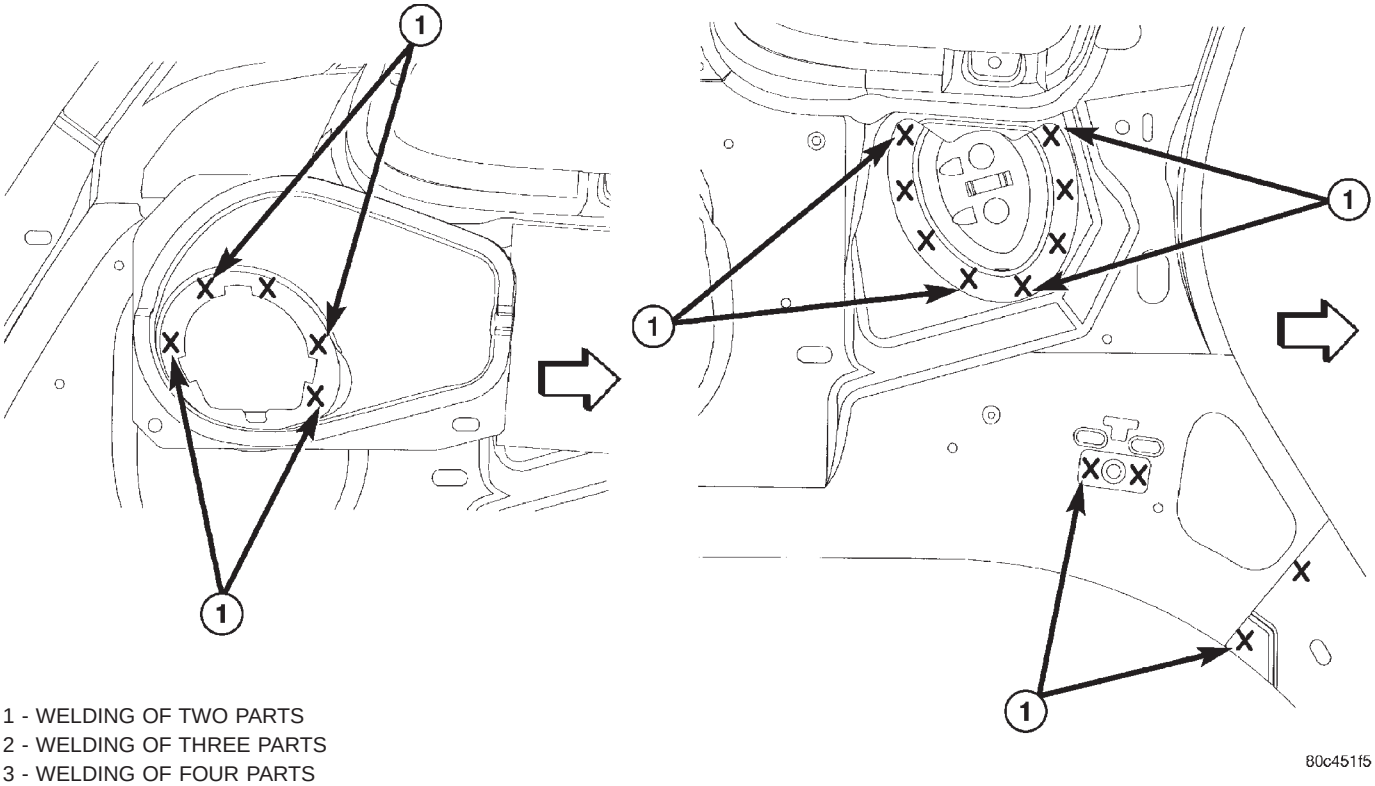

1 - WELDING OF TWO PARTS
2 - WELDING OF THREE PARTS
3 - WELDING OF FOUR PARTS

SPECIFICATIONS (Continued)

WELD LOCATIONS – FRONT FENDER ASSEMBLY

UPPER LIFTGATE ROOF FRAME TO REINFORCEMENT TO LOWER LIFTGATE ROOF FRAME

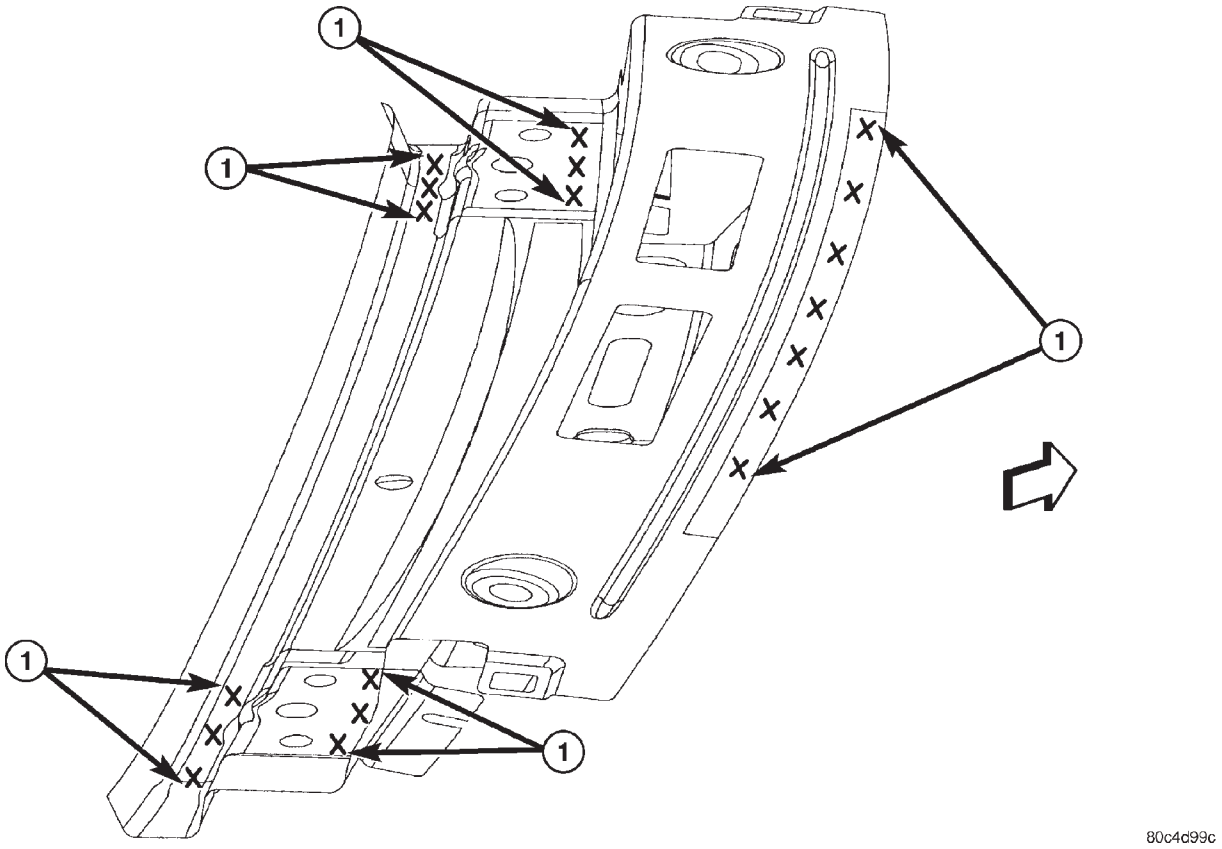

1 - WELDING OF TWO PARTS
2 - WELDING OF THREE PARTS
3 - WELDING OF FOUR PARTS

SPECIFICATIONS (Continued)

UPPER WINDSHIELD FRAME, ROOF BOWS, LIFTGATE ROOF FRAME TO BODY, SIDE APERTURE

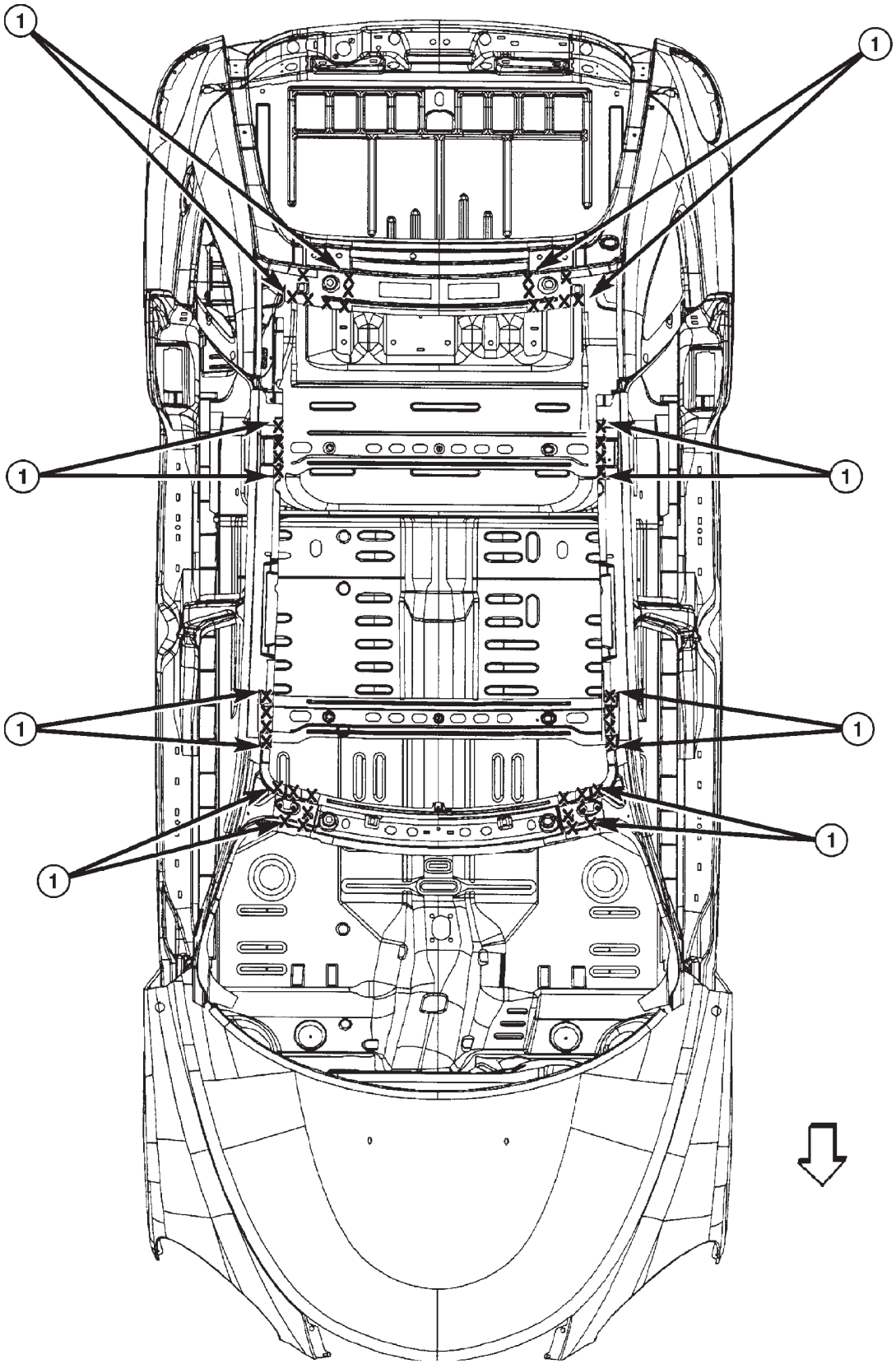

1 - WELDING OF TWO PARTS
2 - WELDING OF THREE PARTS
3 - WELDING OF FOUR PARTS

SPECIFICATIONS (Continued)

OUTER ROOF PANEL TO BODY SIDE APERTURE WINDSHIELD FRAME AND LIFTGATE FRAME

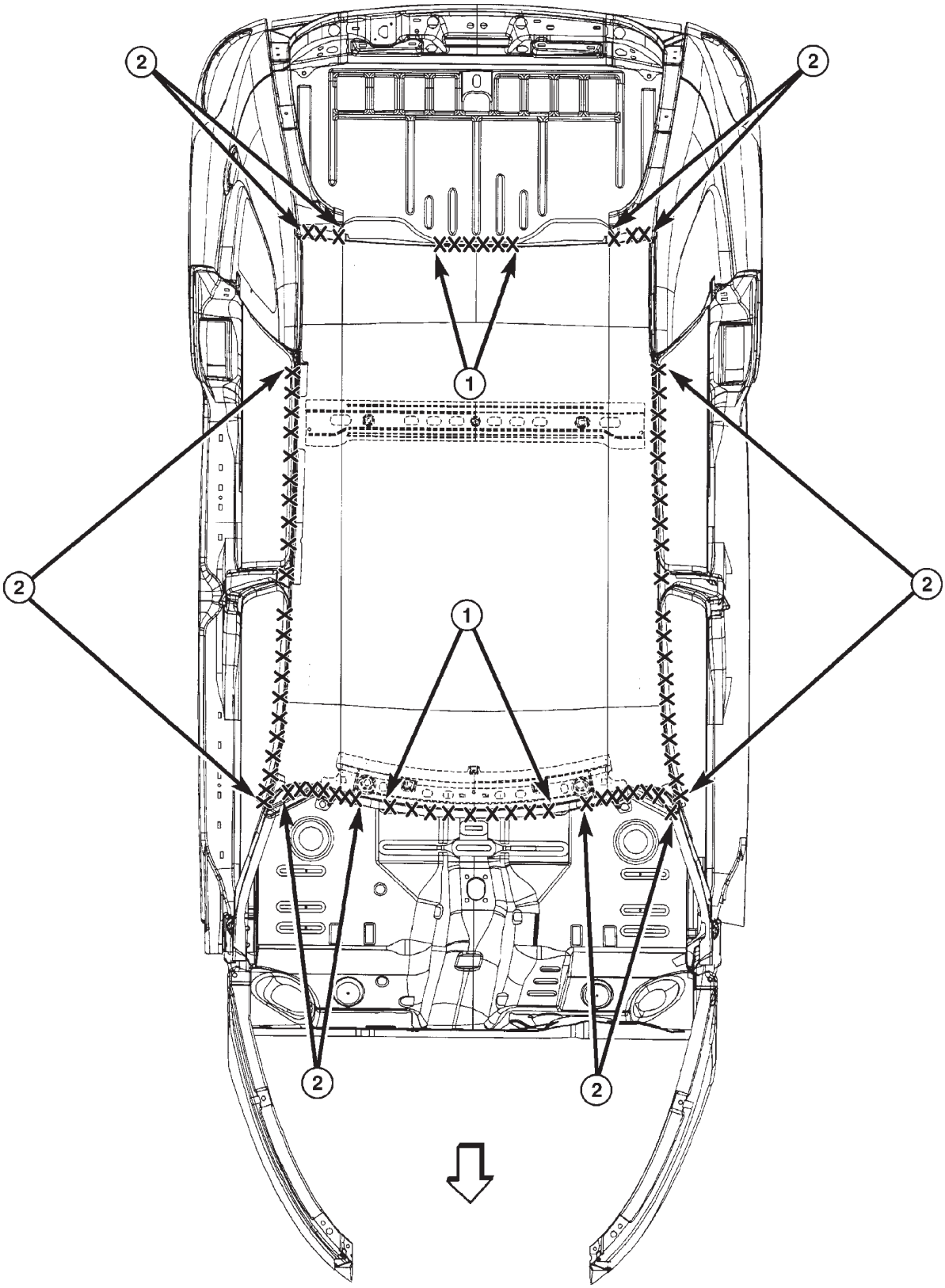

1 - WELDING OF TWO PARTS
2 - WELDING OF THREE PARTS
3 - WELDING OF FOUR PARTS

SPECIFICATIONS (Continued)

WELD LOCATIONS – UNDER BODY ASSEMBLY

FRONT FLOOR PAN TO DASH PANEL AND COWL SIDE PANEL

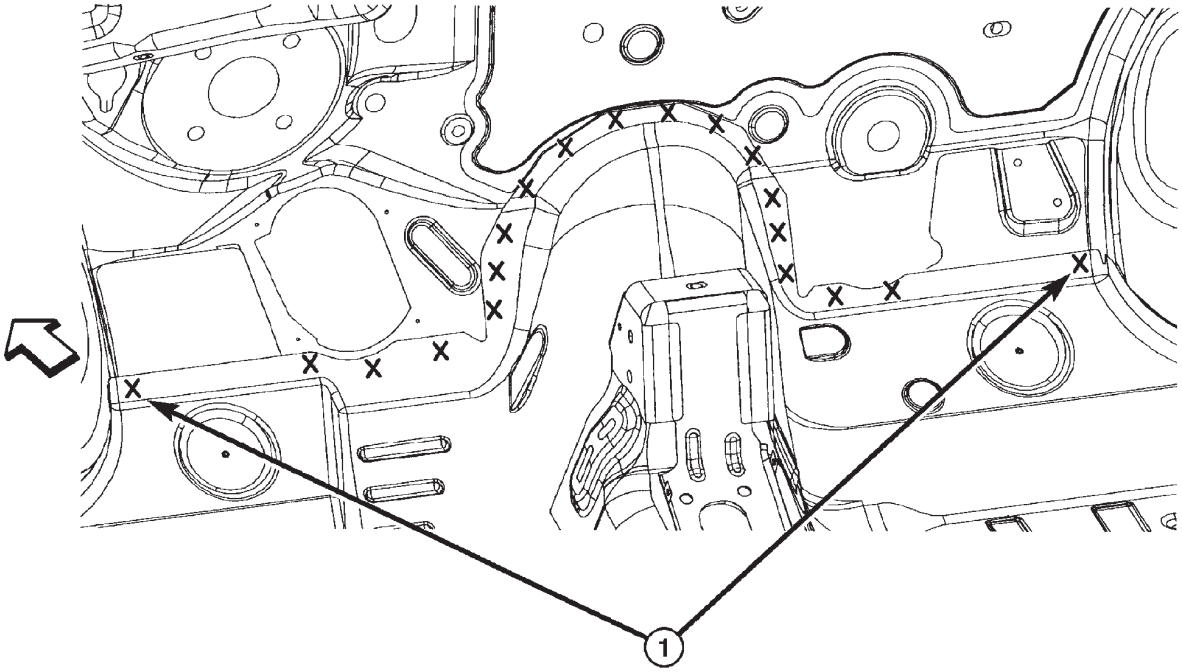

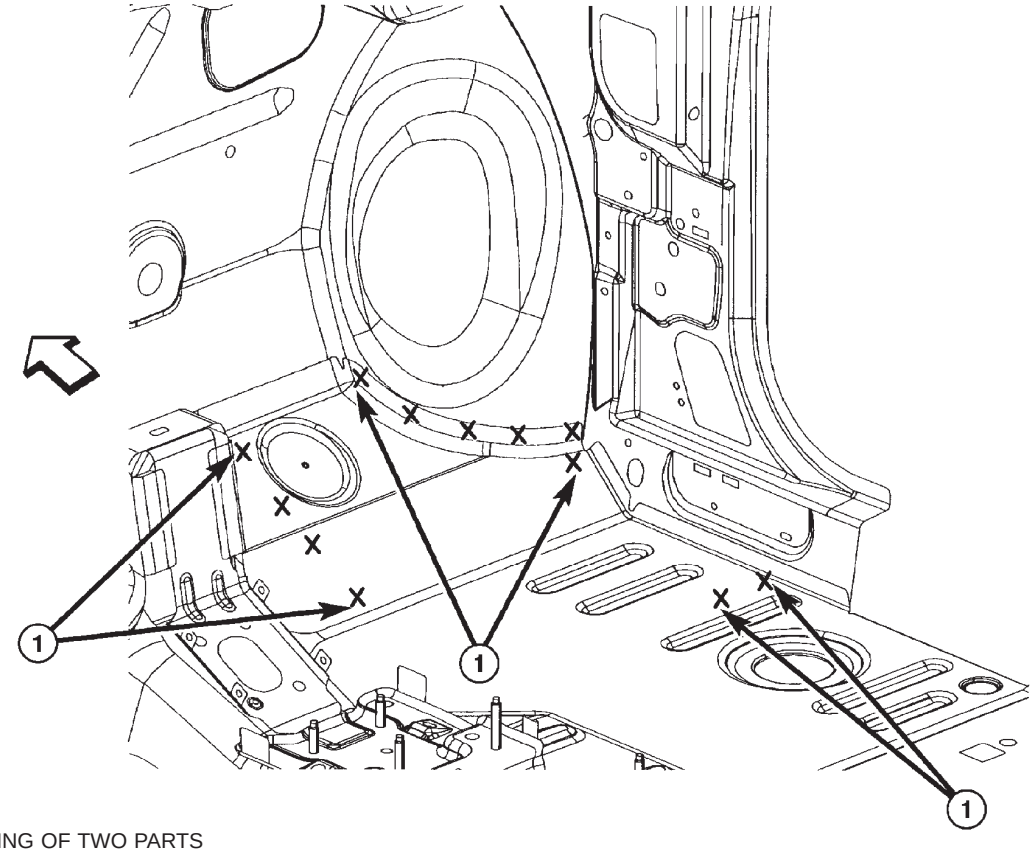

1 - WELDING OF TWO PARTS
2 - WELDING OF THREE PARTS
3 - WELDING OF FOUR PARTS

SPECIFICATIONS (Continued)

STRIKER ASSEMBLY TO LOWER LIFTGATE PANEL TO REAR FLOOR PAN CLOSURE PANEL

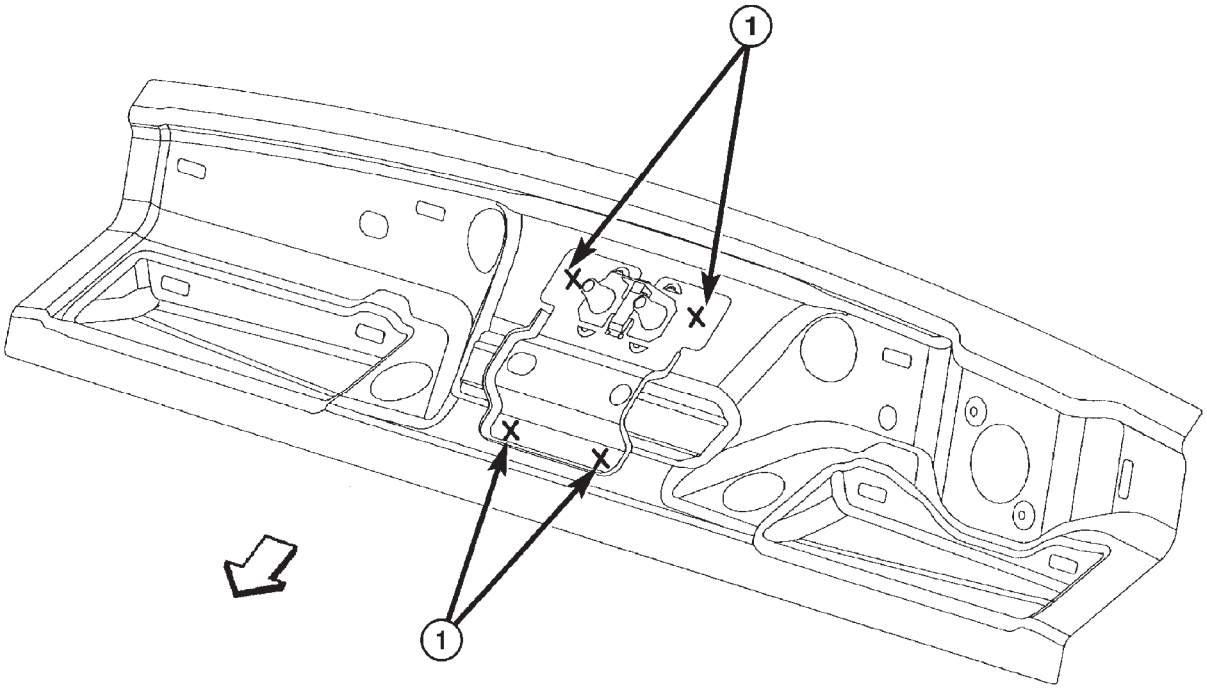

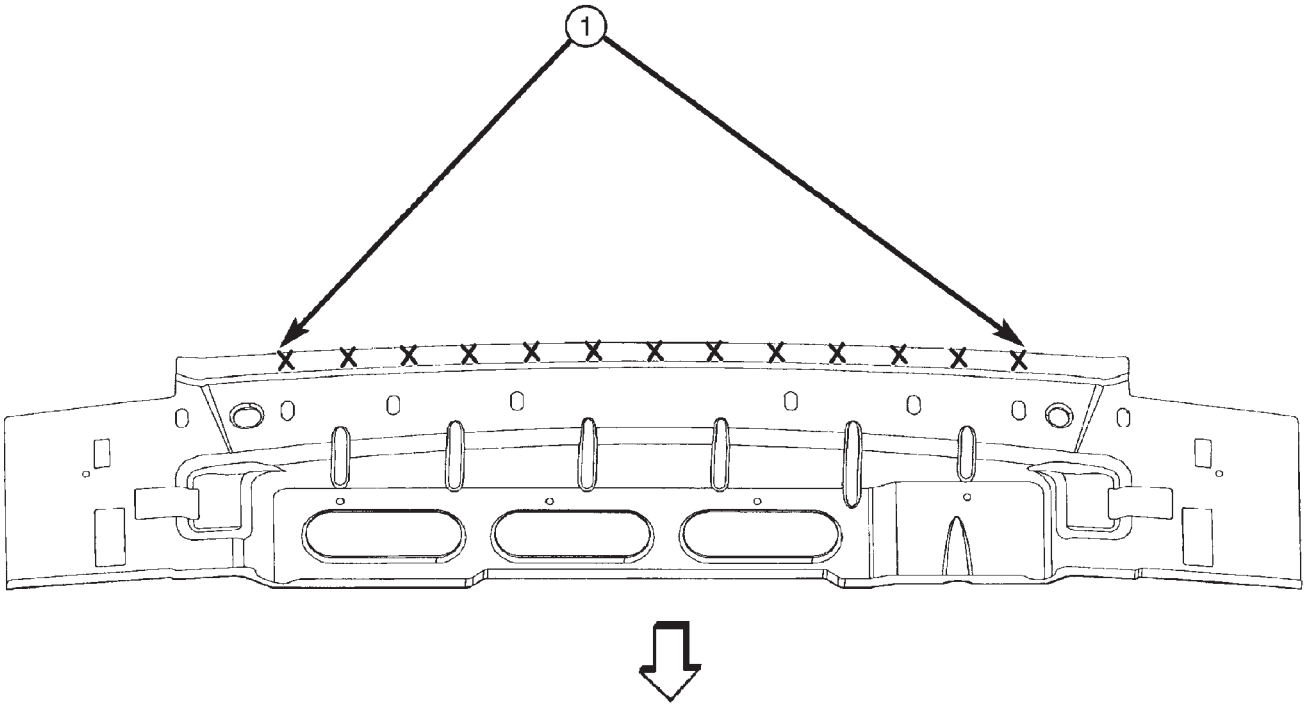

80c4da41

1 - WELDING OF TWO PARTS
2 - WELDING OF THREE PARTS
3 - WELDING OF FOUR PARTS

SPECIFICATIONS (Continued)

RIGHT/LEFT REAR FLOOR PAN CLOSURE REINFORCEMENTS TO SPARE TIRE CLOSURE PANEL

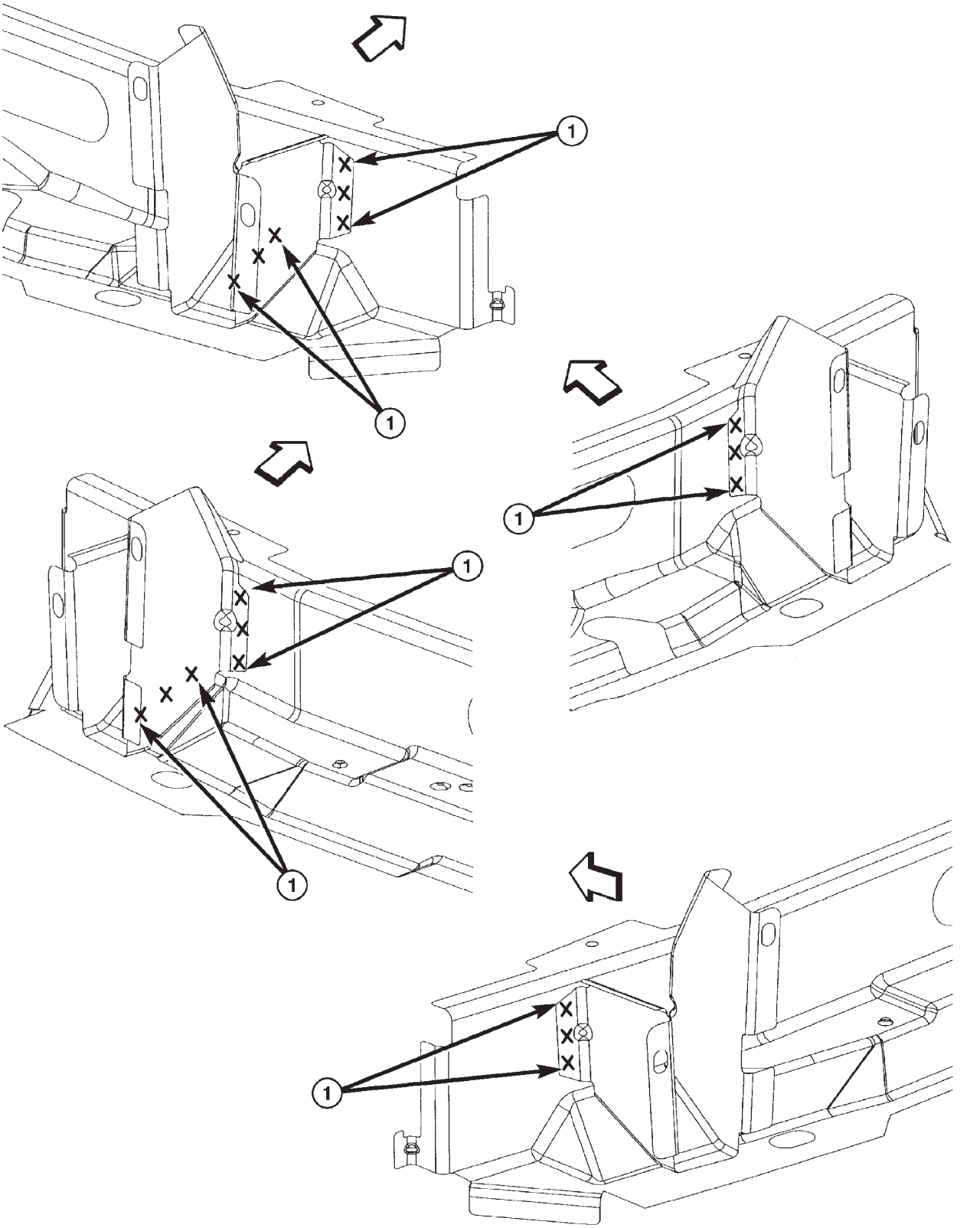

1 - WELDING OF TWO PARTS
2 - WELDING OF THREE PARTS
3 - WELDING OF FOUR PARTS

SPECIFICATIONS (Continued)

LOWER LIFTGATE OPENING PANEL TO INNER QUARTER PANEL AND LOWER LIFTGATE PANEL

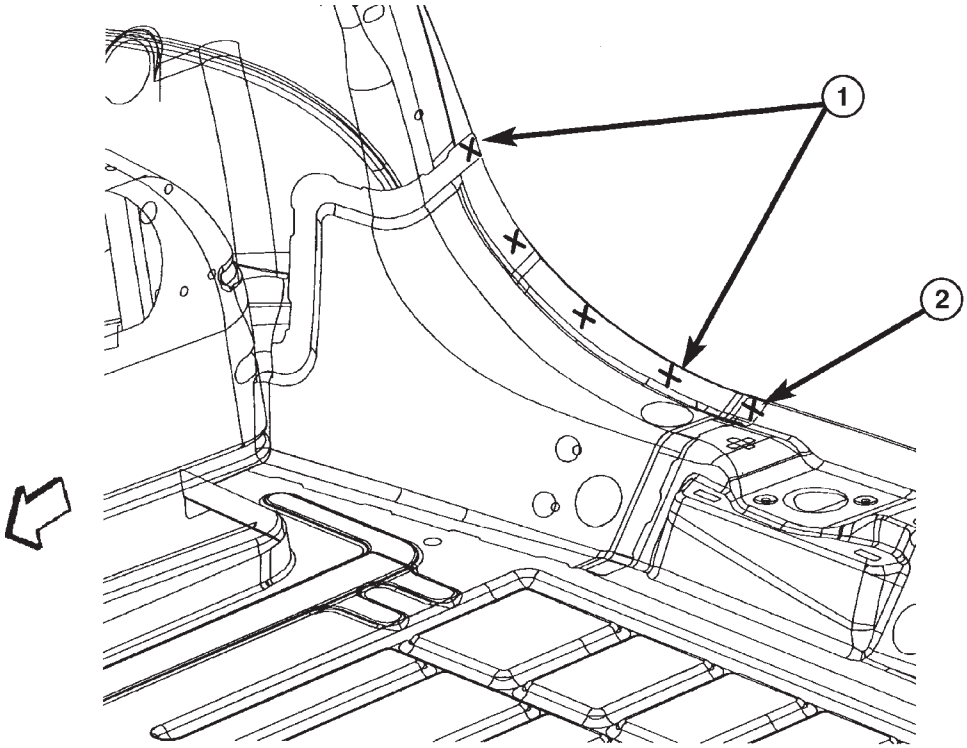

80c4da43

1 - WELDING OF TWO PARTS
2 - WELDING OF THREE PARTS
3 - WELDING OF FOUR PARTS

SPECIFICATIONS (Continued)

REAR SHOCK MOUNT GUSSET TO REAR SHOCK MOUNT REINFORCEMENT TO REAR FLOOR PAN SIDE REINFORCEMENT

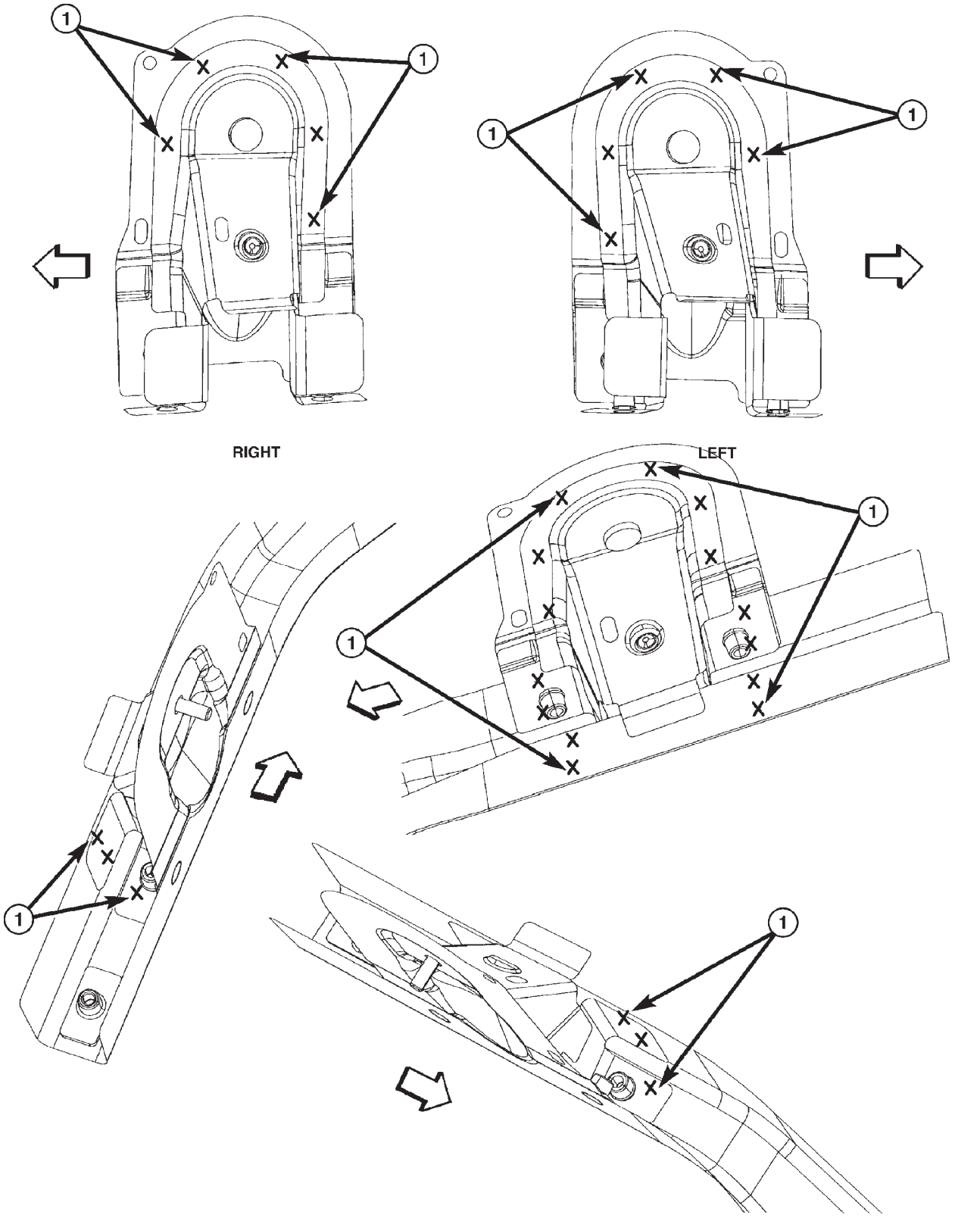

1 - WELDING OF TWO PARTS
2 - WELDING OF THREE PARTS
3 - WELDING OF FOUR PARTS

SPECIFICATIONS (Continued)

INNER BODY SIDE SILL TO FRONT FLOOR PAN AND FRONT SEAT REINFORCEMENT

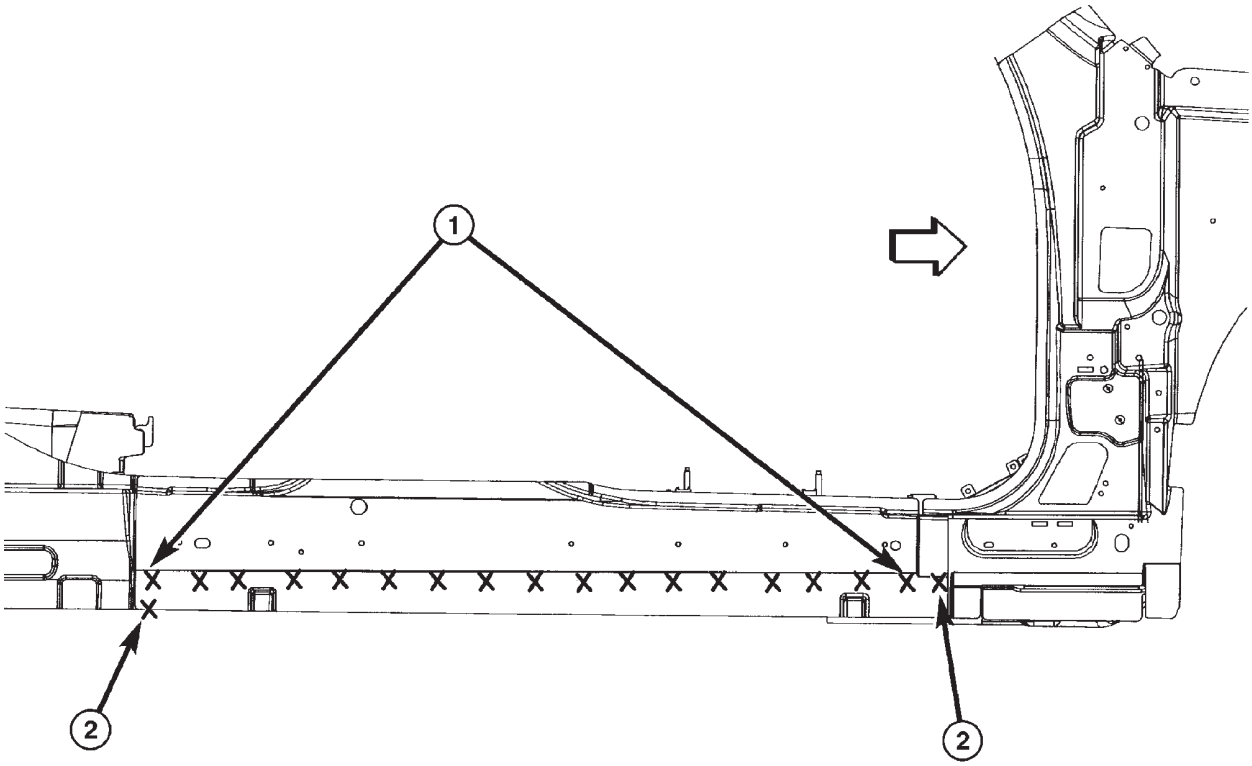

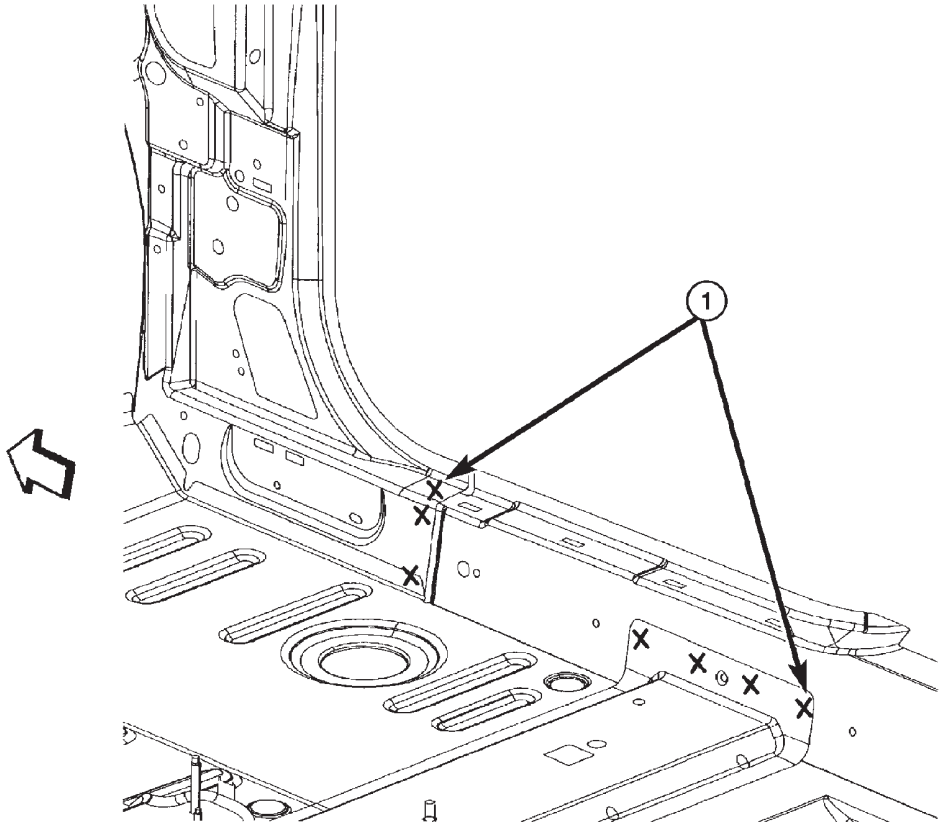

80c4da45

1 - WELDING OF TWO PARTS
2 - WELDING OF THREE PARTS
3 - WELDING OF FOUR PARTS

SPECIFICATIONS (Continued)

CONSOLE MOUNTING BRACKET AND FRONT SEAT REINFORCEMENT TO FRONT FLOOR PAN

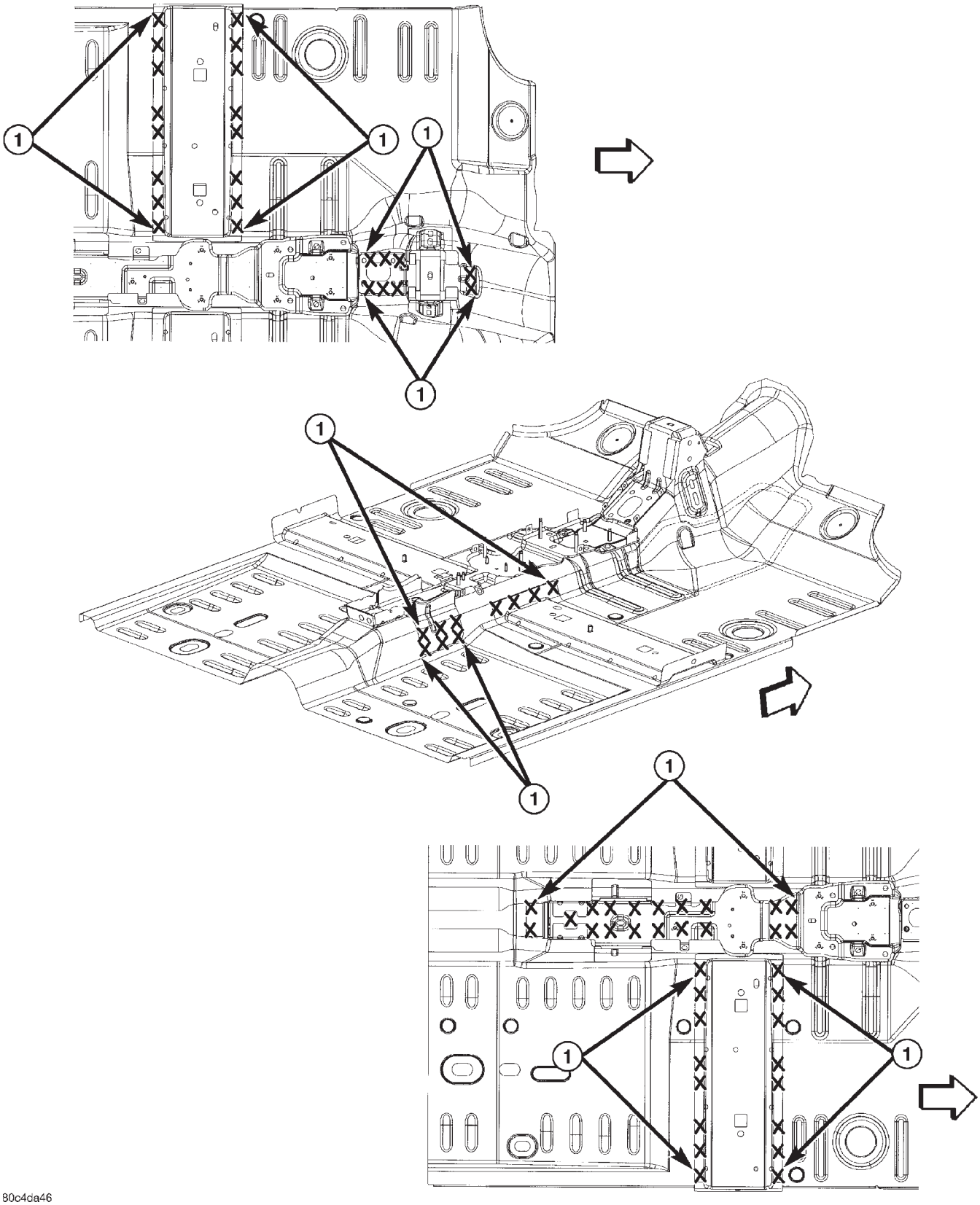

1 - WELDING OF TWO PARTS
2 - WELDING OF THREE PARTS
3 - WELDING OF FOUR PARTS

SPECIFICATIONS (Continued)

QUARTER PANEL TRIM BRACKETS AND INNER WHEELHOUSE EXTENSION TO INNER WHEELHOUSE

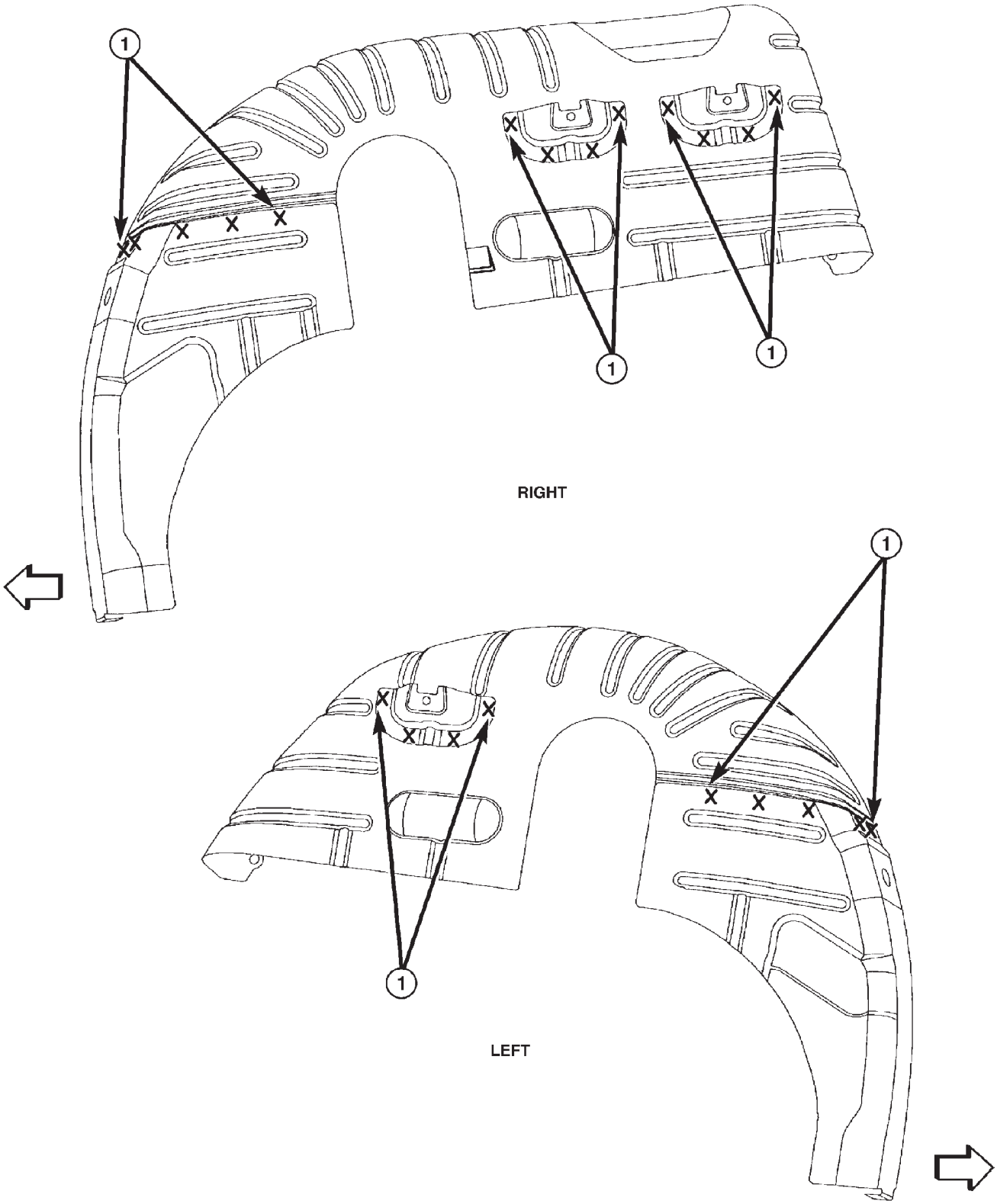

80c4da47

1 - WELDING OF TWO PARTS
2 - WELDING OF THREE PARTS
3 - WELDING OF FOUR PARTS

SPECIFICATIONS (Continued)

LEFT INNER WHEELHOUSE TO REAR FLOOR PAN AND SHOCK MOUNT

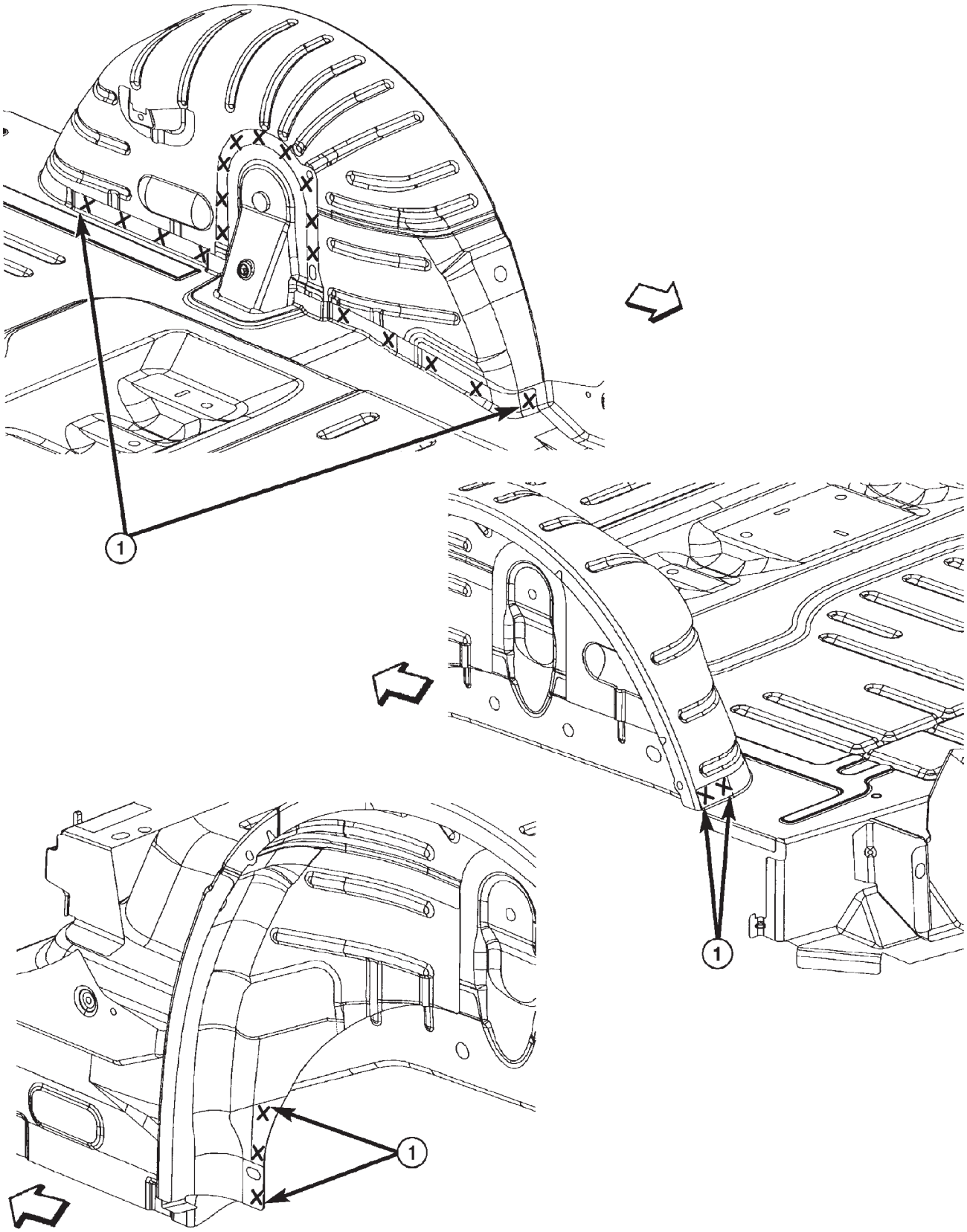

1 - WELDING OF TWO PARTS
2 - WELDING OF THREE PARTS
3 - WELDING OF FOUR PARTS

SPECIFICATIONS (Continued)

RIGHT INNER WHEELHOUSE TO REAR FLOOR PAN AND SHOCK MOUNT

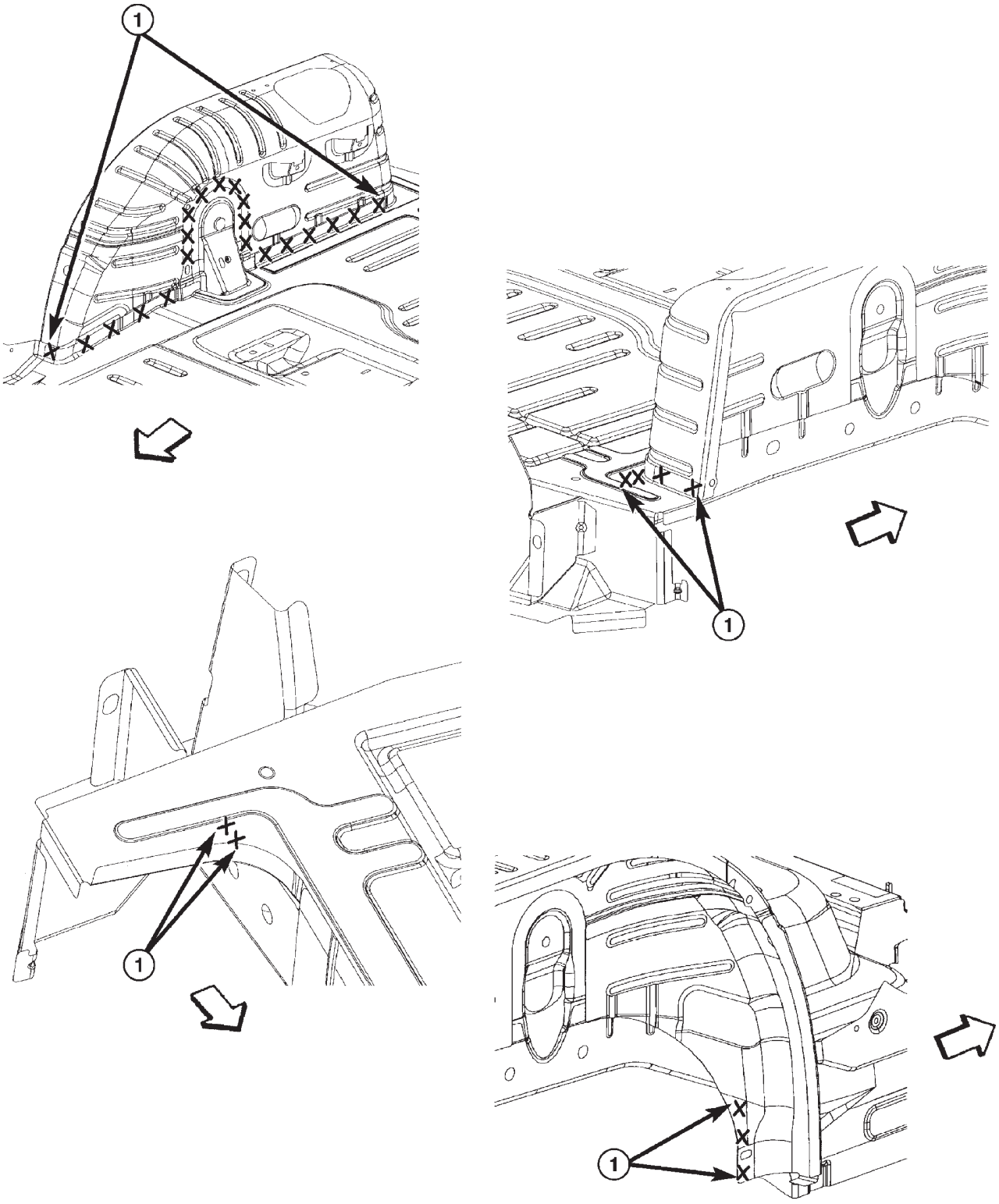

80c4da49

1 - WELDING OF TWO PARTS
2 - WELDING OF THREE PARTS
3 - WELDING OF FOUR PARTS

SPECIFICATIONS (Continued)

D.S.I. BEAM TO FRONT FLOOR PAN AND INNER SIDE SILL

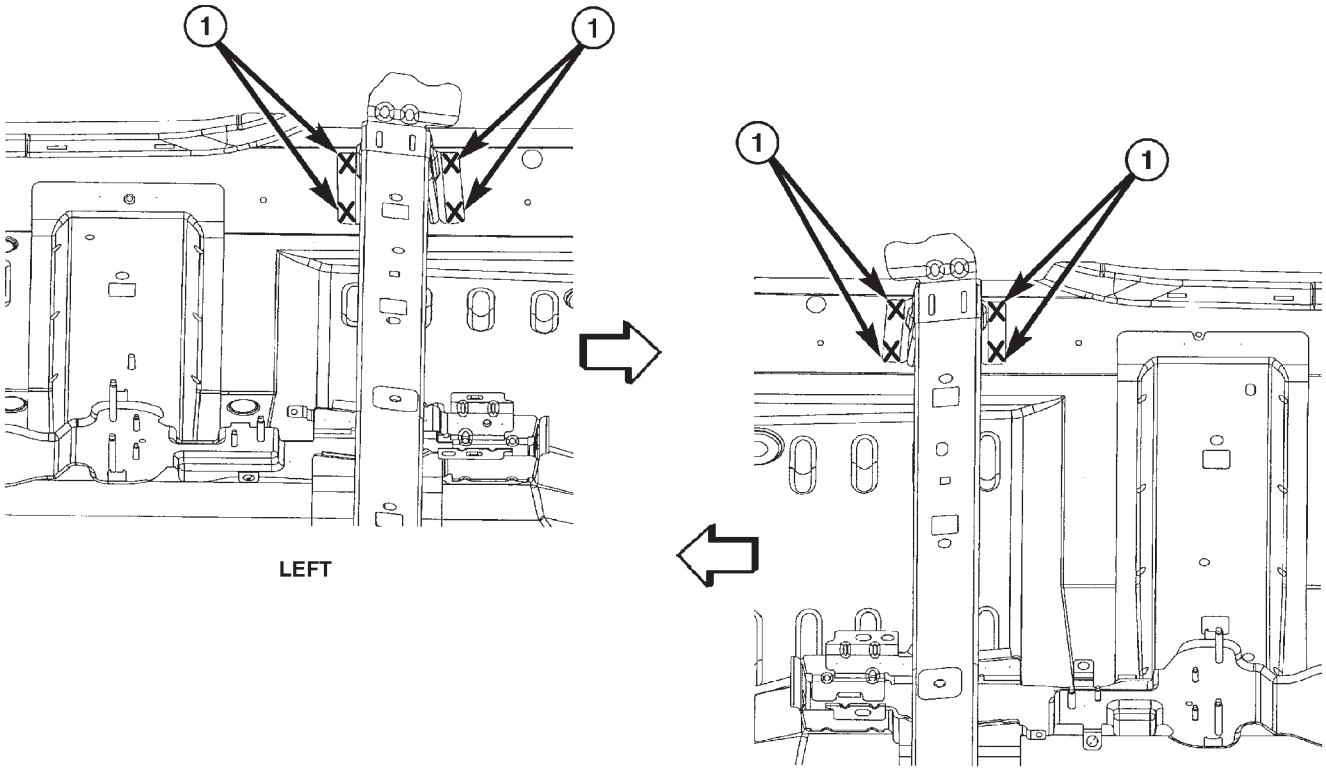

80c4da4a

1 - WELDING OF TWO PARTS
2 - WELDING OF THREE PARTS
3 - WELDING OF FOUR PARTS

SPECIFICATIONS (Continued)

REAR FLOOR PAN TO REAR CROSSMEMBER AND FUEL TANK SUPPORT – RIGHT SIDE

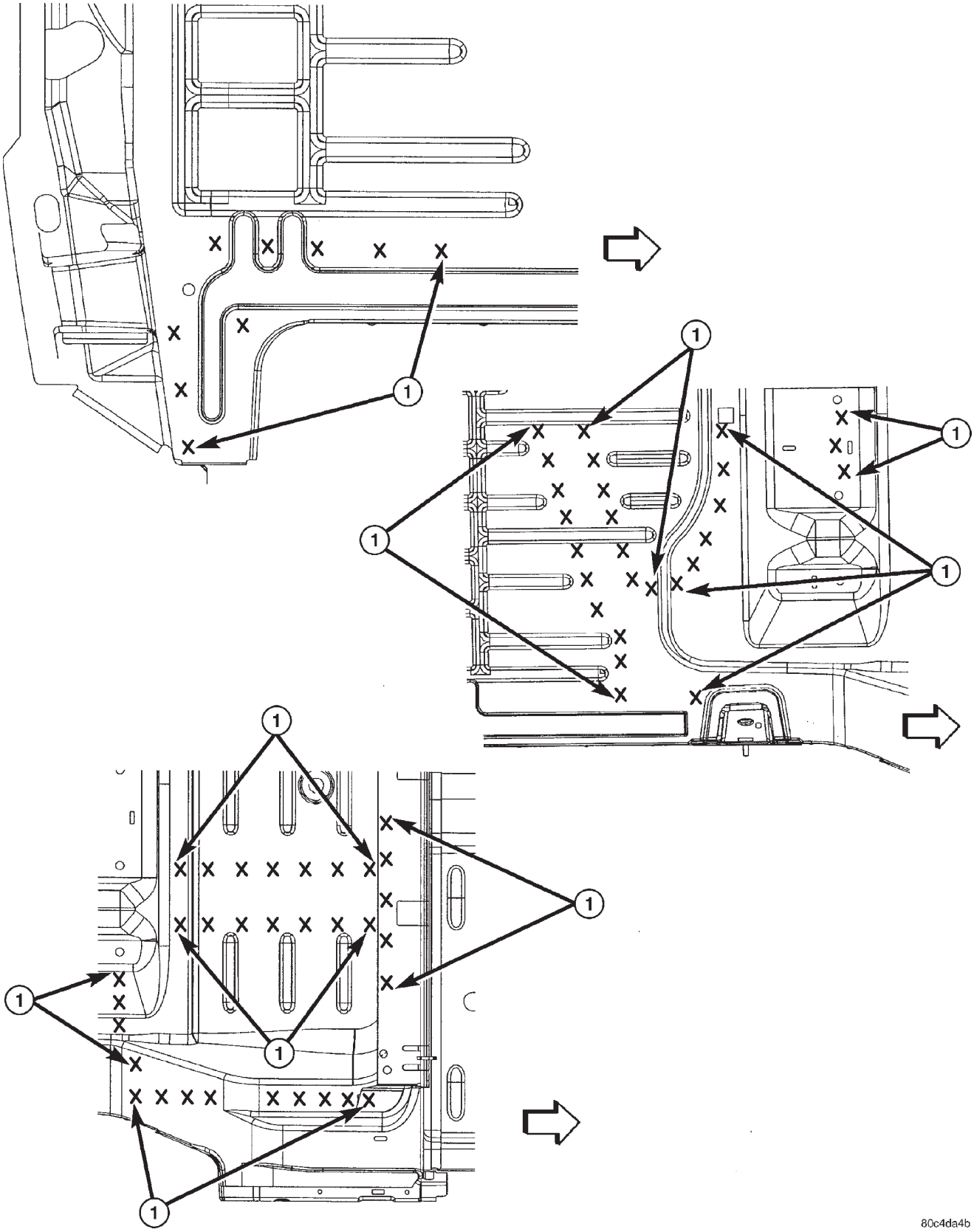

1 - WELDING OF TWO PARTS
2 - WELDING OF THREE PARTS
3 - WELDING OF FOUR PARTS

SPECIFICATIONS (Continued)

REAR FLOOR PAN TO REAR CROSSMEMBER AND FUEL TANK SUPPORT – LEFT SIDE

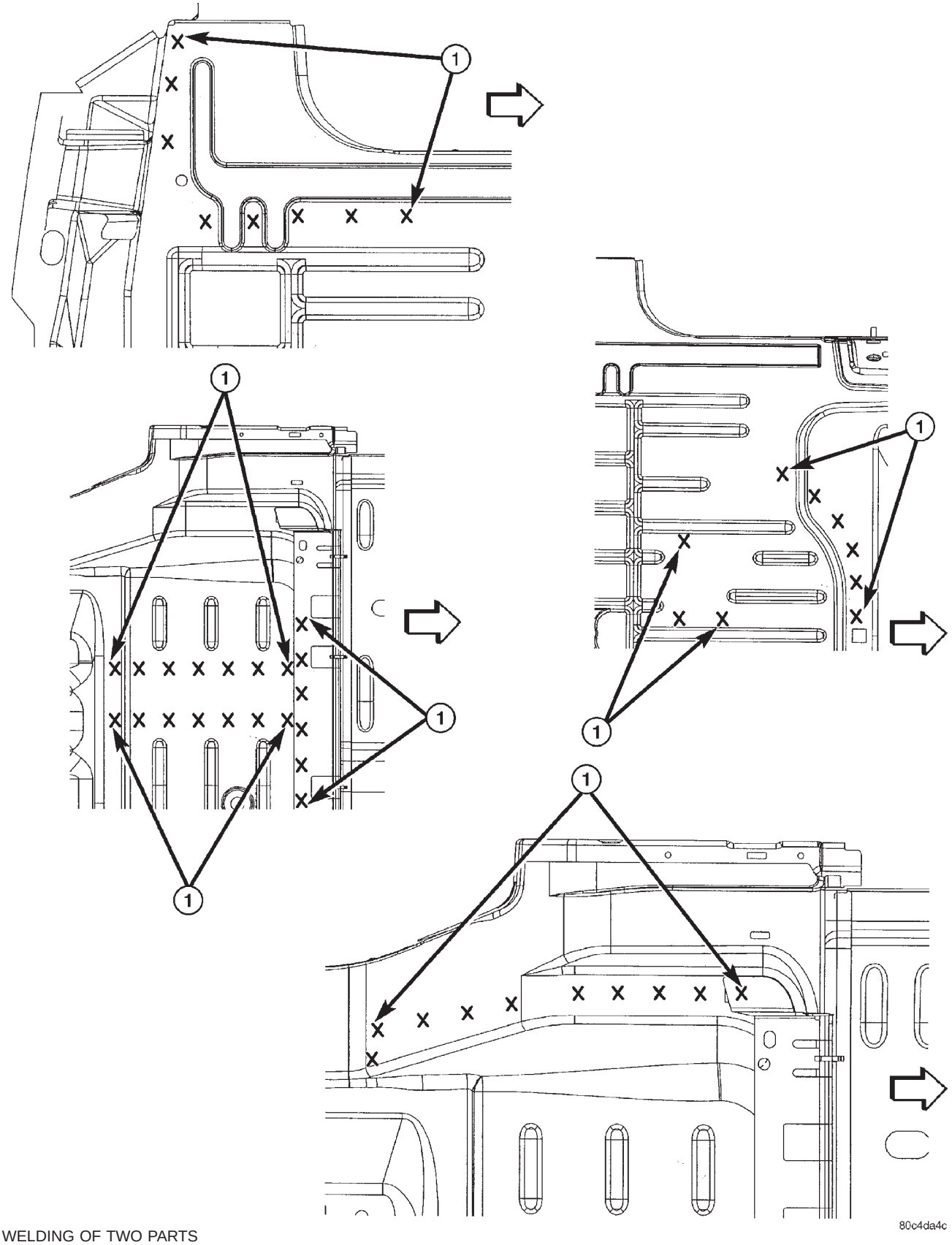

1 - WELDING OF TWO PARTS
2 - WELDING OF THREE PARTS
3 - WELDING OF FOUR PARTS

SPECIFICATIONS (Continued)

FRONT FLOOR PAN TO FRONT SIDE RAIL REAR EXTENSION – TYPICAL BOTH SIDES

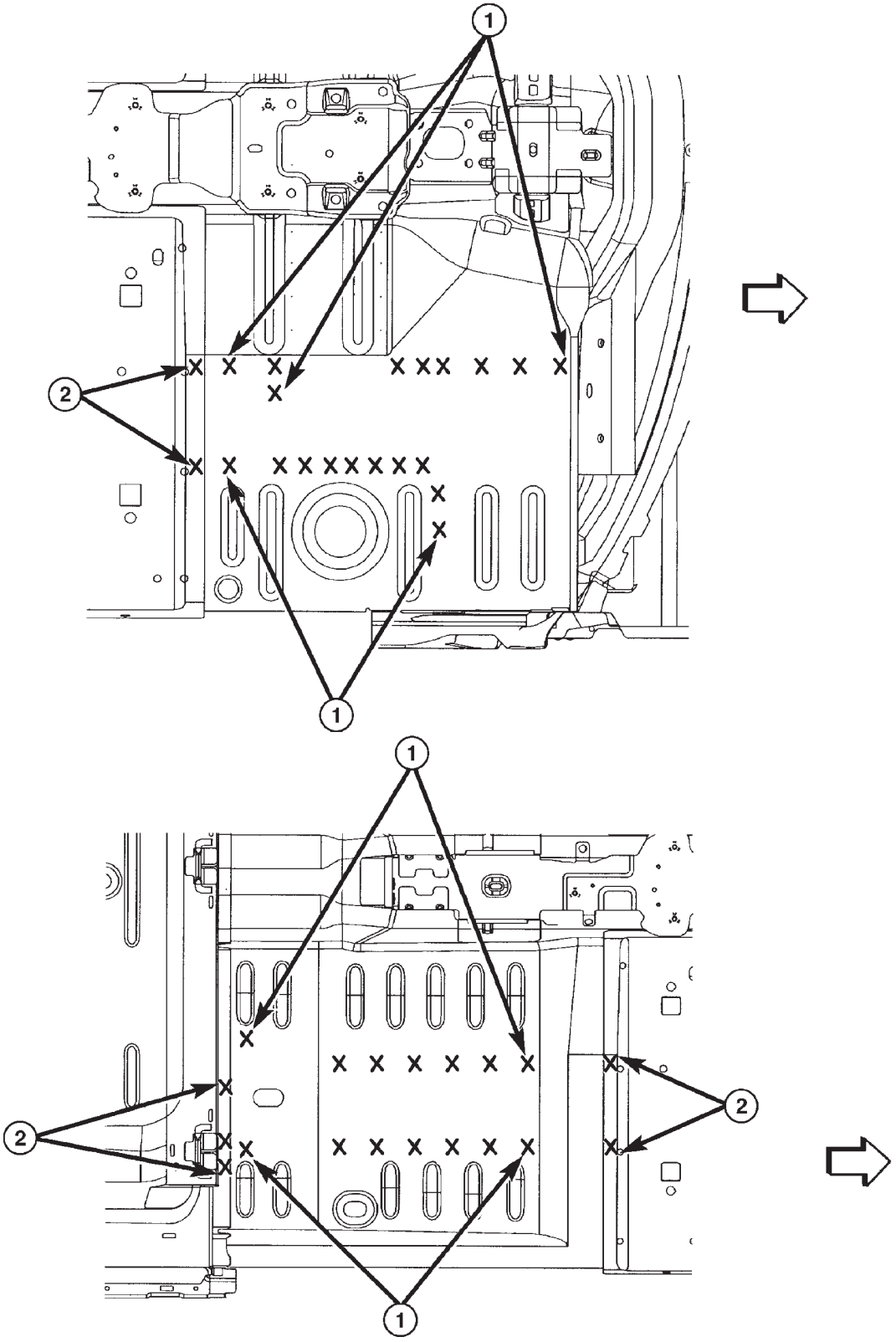

80c4da4d

1 - WELDING OF TWO PARTS
2 - WELDING OF THREE PARTS
3 - WELDING OF FOUR PARTS

SPECIFICATIONS (Continued)

REAR FLOOR PAN SIDE RAIL TO REAR FLOOR PAN CROSSMEMBER AND REAR FLOOR PAN FRONT KICK UP CROSSMEMBER

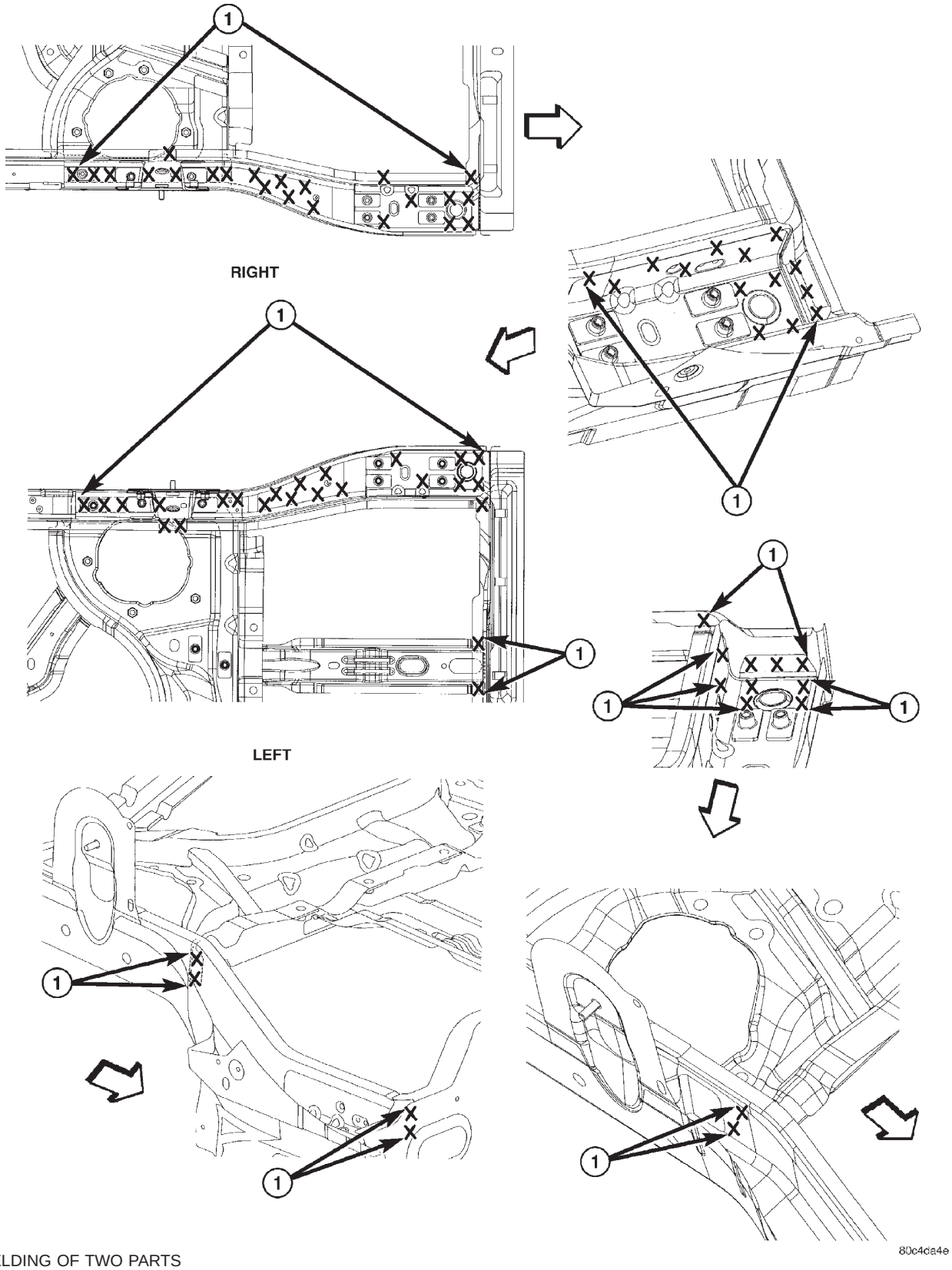

1 - WELDING OF TWO PARTS
2 - WELDING OF THREE PARTS
3 - WELDING OF FOUR PARTS

SPECIFICATIONS (Continued)

REAR FLOOR PAN REAR CROSSMEMBER TO REAR SUSPENSION AND FUEL TANK CROSSMEMBER

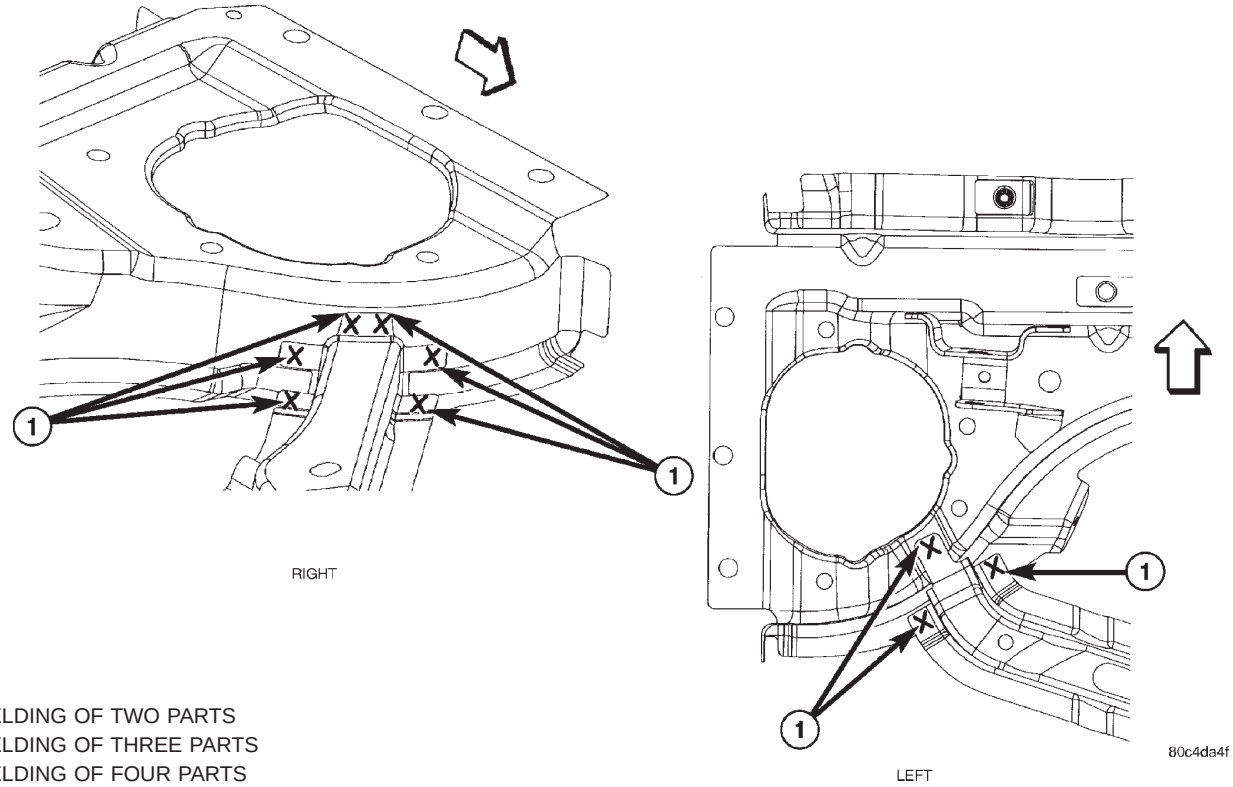

1 - WELDING OF TWO PARTS
2 - WELDING OF THREE PARTS
3 - WELDING OF FOUR PARTS

REAR INNER SIDE SILL TO FLOOR PAN SIDE RAIL AND REAR FLOOR PAN FRONT KICK UP CROSSMEMBER

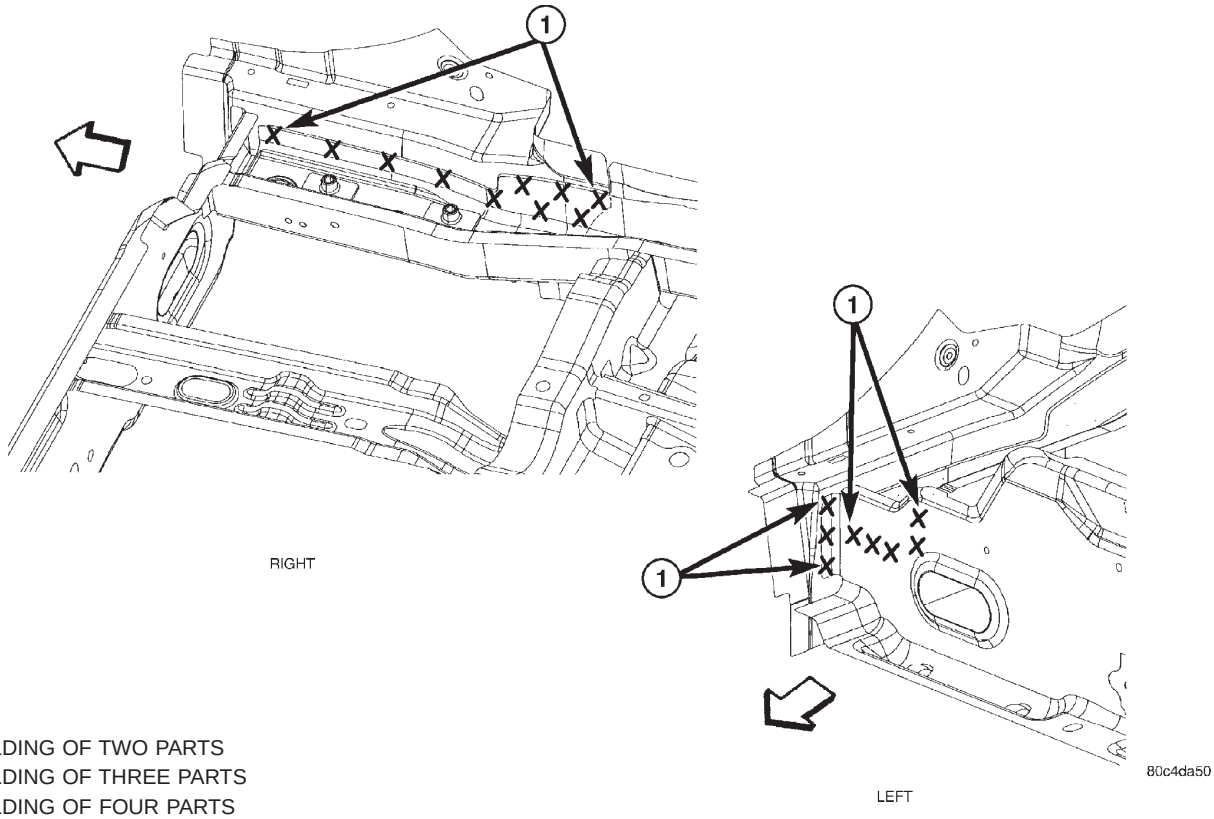

1 - WELDING OF TWO PARTS
2 - WELDING OF THREE PARTS
3 - WELDING OF FOUR PARTS

SPECIFICATIONS (Continued)

REAR FLOOR PAN FRONT KICK UP CROSSMEMBER TO FUEL TANK SUPPORT REINFORCEMENT AND REAR FLOOR PAN SIDE RAILS

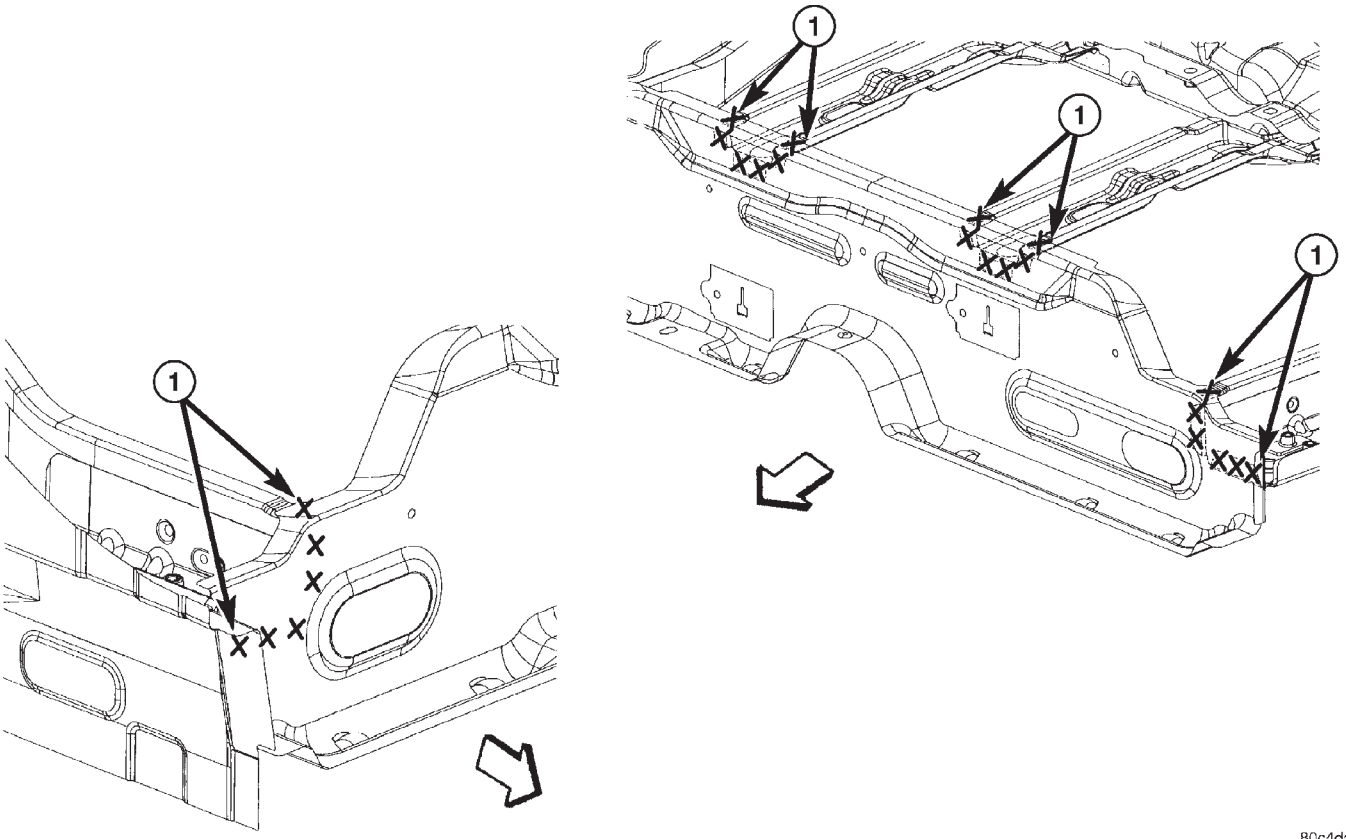

1 - WELDING OF TWO PARTS
2 - WELDING OF THREE PARTS
3 - WELDING OF FOUR PARTS

SPECIFICATIONS (Continued)

REAR FLOOR PAN TO INNER BODY SIDE SILL

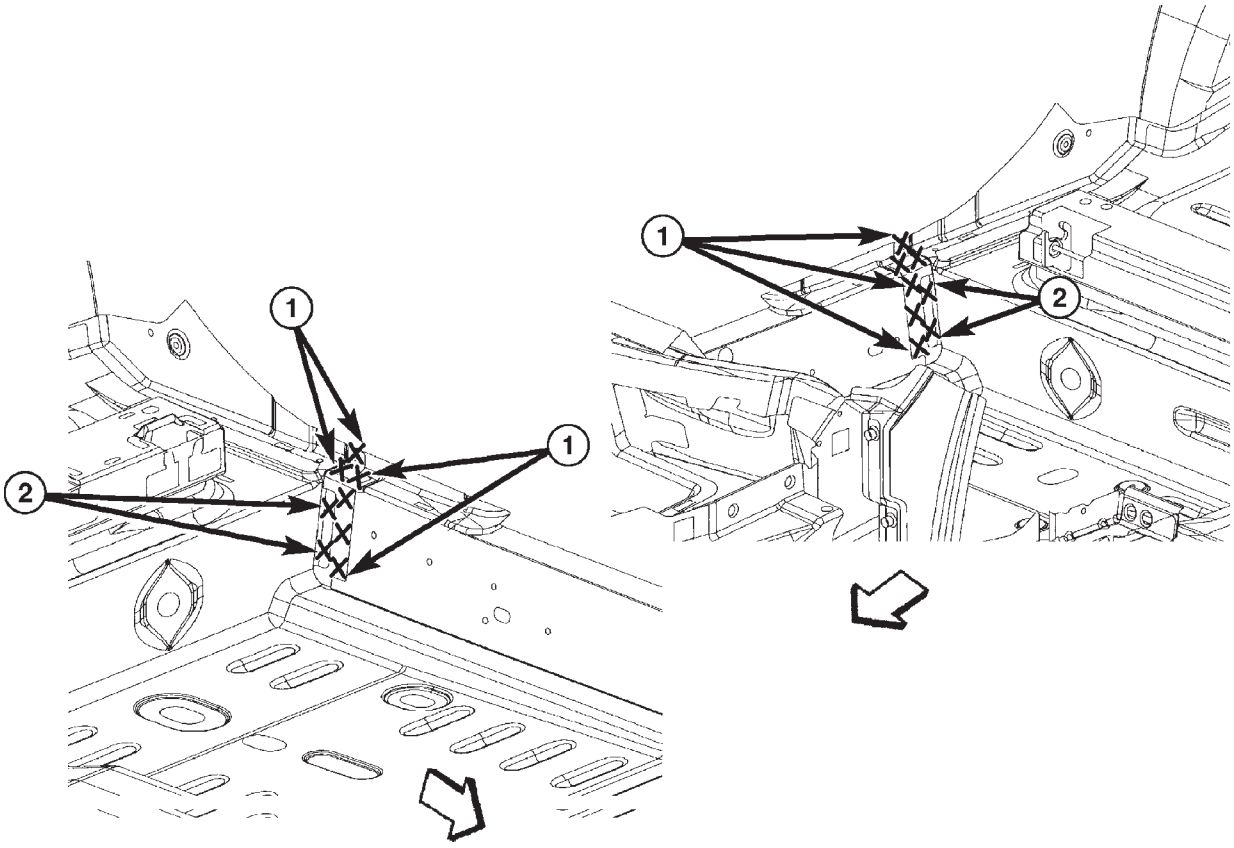

1 - WELDING OF TWO PARTS
2 - WELDING OF THREE PARTS
3 - WELDING OF FOUR PARTS

SPECIFICATIONS (Continued)

REAR FLOOR PAN TO REAR FLOOR PAN FRONT KICK UP CROSSMEMBER AND FRONT SIDE RAIL REAR EXTENSION

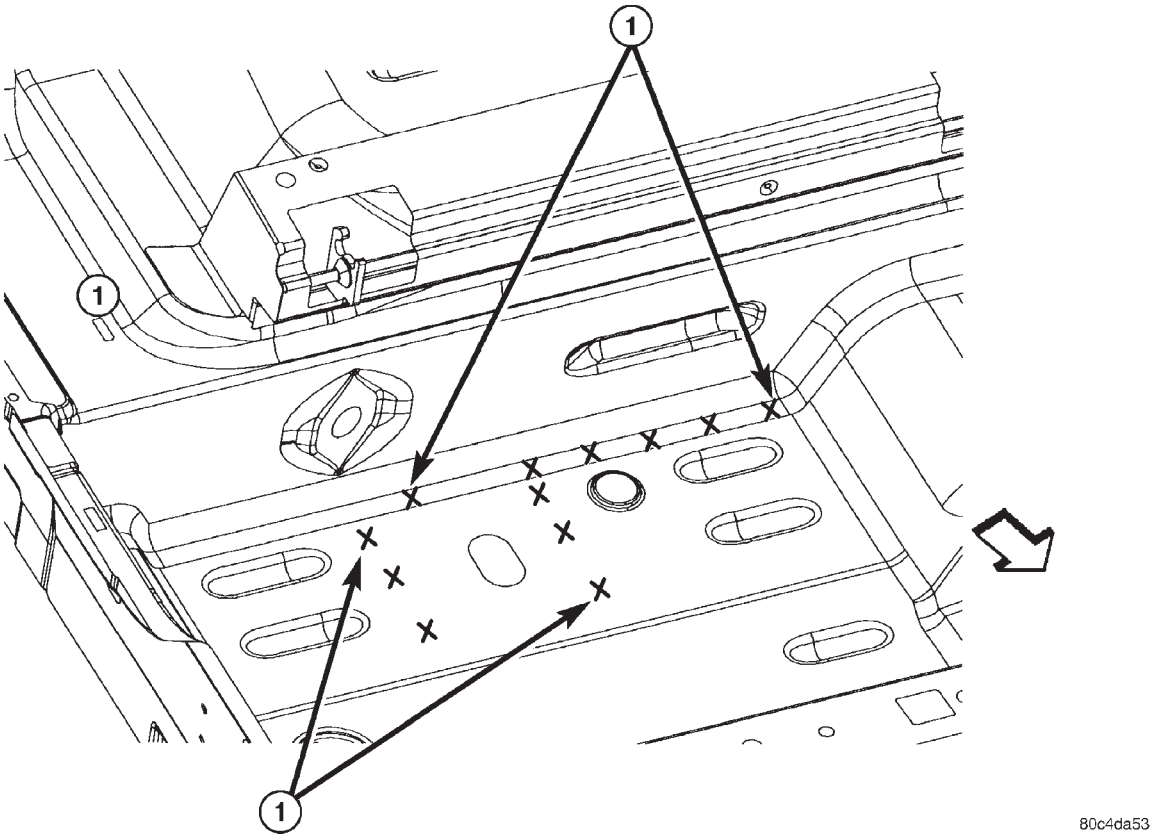

1 - WELDING OF TWO PARTS
2 - WELDING OF THREE PARTS
3 - WELDING OF FOUR PARTS

SPECIFICATIONS (Continued)

REAR FLOOR PAN SIDE RAIL REINFORCEMENT TO REAR FLOOR PAN SIDE RAIL TO REAR SUSPENSION CROSSMEMBER

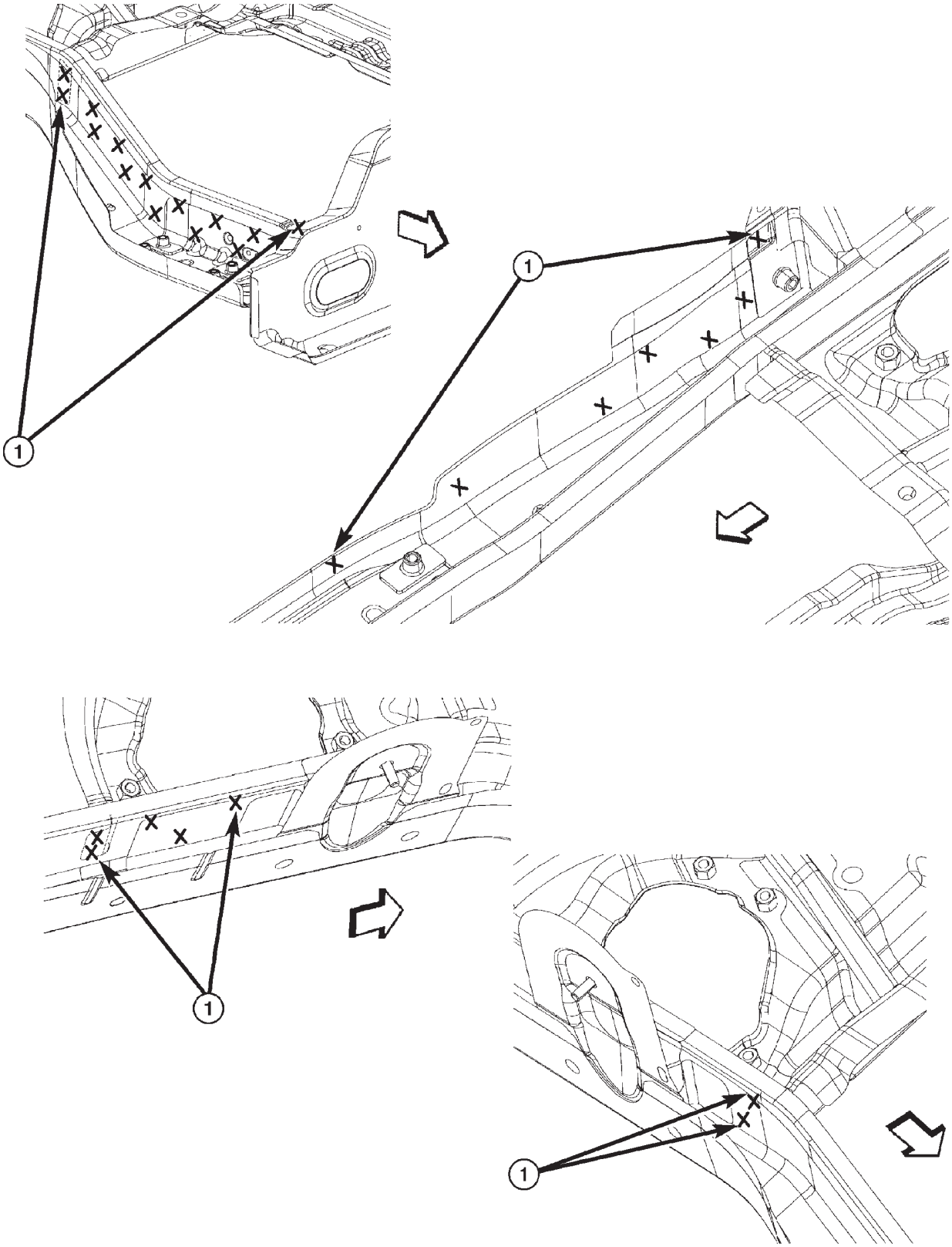

1 - WELDING OF TWO PARTS
2 - WELDING OF THREE PARTS
3 - WELDING OF FOUR PARTS

SPECIFICATIONS (Continued)

TORQUE SPECIFICATIONS

BODY COMPONENTS

DESCRIPTION	TORQUE
All seat belt anchor bolts	40 N·m (30 ft. lbs.)
All seat belt anchor nuts	40 N·m (30 ft. lbs.)
All seat belt retractor bolts	40 N·m (30 ft. lbs.)
Liftgate latch striker	22 N·m (16 ft. lbs.)
Front seat track to floor pan bolts	55 N·m (40 ft. lbs.)
Front seat inboard pivot bolt	40 N·m (30 ft. lbs.)
Front seat recliner to seat cushion frame	12 N·m (9 ft. lbs.)
Front seat track to cushion frame bolt	12 N·m (9 ft. lbs.)
Front seat back	40 N·m (30 ft. lbs.)
Front seat back recliner to seat back	12 N·m (9 ft. lbs.)
Front door hinge to hinge pillar bolt	28 N·m (21 ft. lbs.)
Front door hinge to door nuts and bolt	28 N·m (21 ft. lbs.)
Front door latch striker	28 N·m (20 ft. lbs.)
Hood latch striker	13.5 N·m (10 ft. lbs.)
Rear door glass to regulator bolt	11 N·m (105 in. lbs.)
Rear door hinge to B-pillar bolt	28 N·m (20 ft. lbs.)
Rear door hinge to door bolt	28 N·m (20 ft. lbs.)
Rear door latch striker	28 N·m (20 ft. lbs.)
Rear seat back and seat belt buckle anchor nut	57 N·m (42 ft. lbs.)

HEATING AND AIR CONDITIONING

TABLE OF CONTENTS

page

DESCRIPTION AND OPERATION
HEATER AND AIR CONDITIONING 2
AIRFLOW DISTRIBUTION 3
HEATER AND AIR CONDITIONING CONTROL . . . 4
VACUUM CONTROL SYSTEM 5
BLOWER MOTOR 5
BLOWER MOTOR RESISTOR 6
REFRIGERANT 7
REFRIGERANT OIL 7
A/C REFRIGERANT LINES 7
VARIABLE ORIFICE VALVE 9
CONDENSER 9
EVAPORATOR 10
CONDENSATE DRAIN TUBE 10
ACCUMULATOR 11
LOW PRESSURE CLUTCH CYCLING SWITCH . . 11
HEATER CORE 12
COMPRESSOR 12
HIGH PRESSURE CUT OUT SWITCH 13
COMPRESSOR CLUTCH 13
A/C COMPRESSOR CLUTCH RELAY 14

DIAGNOSIS AND TESTING
SERVICE WARNINGS AND PRECAUTIONS 15
A/C PERFORMANCE TEST 16
HEATER PERFORMANCE TEST 16
VACUUM CONTROL SYSTEM 17
BLOWER MOTOR ELECTRICAL DIAGNOSIS . . . 19
BLOWER MOTOR VIBRATION AND/OR NOISE DIAGNOSIS 19
COMPRESSOR NOISE DIAGNOSIS 19
REFRIGERANT SYSTEM CHARGE LEVEL TEST 19
A/C COMPRESSOR CLUTCH RELAY 22
HIGH PRESSURE CUT OUT SWITCH 22
LOW PRESSURE CLUTCH CYCLING SWITCH . . 23

SERVICE PROCEDURES
SERVICE WARNINGS AND PRECAUTIONS 23
REFRIGERANT SYSTEM SERVICE EQUIPMENT 24
REFRIGERANT RECOVERY 25
REFRIGERANT SYSTEM LEAKS 25
REFRIGERANT SYSTEM EVACUATE 26
REFRIGERANT OIL LEVEL 26
REFRIGERANT SYSTEM CHARGE 27

REMOVAL AND INSTALLATION
SERVICE WARNINGS AND PRECAUTIONS 28
A/C COMPRESSOR CLUTCH RELAY 30
ACCUMULATOR 30
A/C SERVICE PORT VALVE CORES 31
BLOWER MOTOR 32
BLOWER MOTOR RESISTOR 33
COMPRESSOR 34
COMPRESSOR CLUTCH 35
CONDENSATE DRAIN TUBE 38
CONDENSER 38
DISCHARGE LINE 40
DUCTS 42
EVAPORATOR 43
HEATER CORE 43
HEATER HOSE 44
HIGH PRESSURE CUT OUT SWITCH 44
LIQUID LINE 45
LOW PRESSURE CLUTCH CYCLING SWITCH . . 46
MODE CONTROL CABLE 47
RECIRCULATION DOOR ACTUATOR 47
SUCTION AND LIQUID LINE ASSEMBLY 48
SUCTION LINE 49
TEMPERATURE CONTROL CABLE 50
VARIABLE ORIFICE VALVE 51
HEATER-A/C UNIT HOUSING 51

DISASSEMBLY AND ASSEMBLY
HEATER-A/C UNIT HOUSING 53

ADJUSTMENTS
MODE CONTROL CABLE 55
TEMPERATURE CONTROL CABLE 55

SPECIFICATIONS
A/C APPLICATION TABLE 56

DESCRIPTION AND OPERATION

HEATER AND AIR CONDITIONING

DESCRIPTION

Both the standard heater-only and the optional heater/air conditioning systems share many of the same functional components. This group will deal with both systems together when component function is common, and separately when they are not. All vehicles are equipped with a common heater-A/C housing assembly (Fig. 1). The system combines air conditioning, heating, and ventilating capabilities in a single unit housing mounted under the instrument panel. On heater-only systems, the evaporator coil is omitted from the housing and replaced with an air restrictor plate.

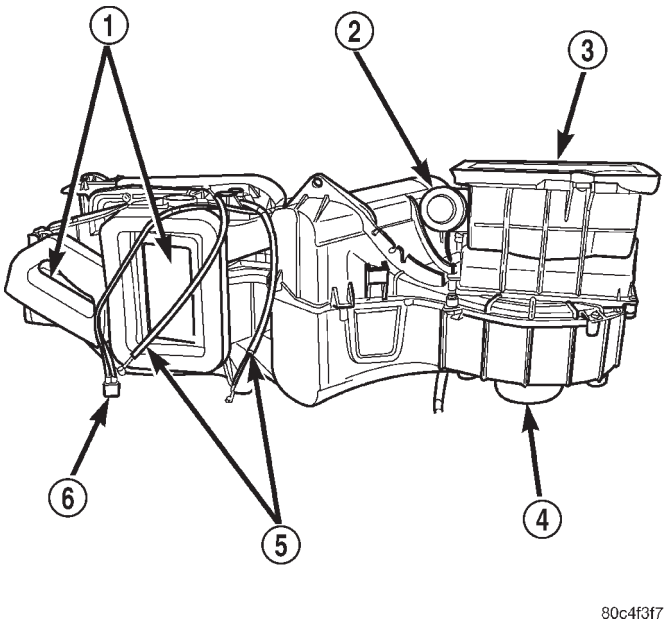

Fig. 1 Heating, Ventilation, Air Conditioning (HVAC) Unit Housing

1 – AIR DISTRIBUTION
2 – RECIRCULATION DOOR VACUUM ACTUATOR
3 – AIR INLET
4 – BLOWER MOTOR
5 – CONTROL CABLES
6 – VACUUM HARNESS

The optional air conditioner for all models is designed for the use of non-CFC, R-134a refrigerant. The air conditioning system has an evaporator to cool and dehumidify the incoming air prior to blending it with the heated air. This air conditioning system uses a low pressure cycling clutch switch mounted on the accumulator to maintain minimum evaporator temperature and prevent evaporator freezing by cycling the compressor clutch.

Other than the heater core, the evaporator and the blower motor and wheel unit, the internal components of the heater and air conditioning system unit housing are serviced only as a unit with the upper or lower housing unit. To service the heater core or evaporator, the unit housing must be removed from the vehicle and disassembled.

OPERATION

Outside air enters the vehicle through the cowl top opening at the base of the windshield, and passes through a plenum chamber to the heater-A/C system blower housing (Fig. 2). Air flow velocity can then be adjusted with the blower motor speed selector switch on the heater-A/C control panel. The air intake openings must be kept free of snow, ice, leaves, and other obstructions for the heater-A/C system to receive a sufficient volume of outside air.

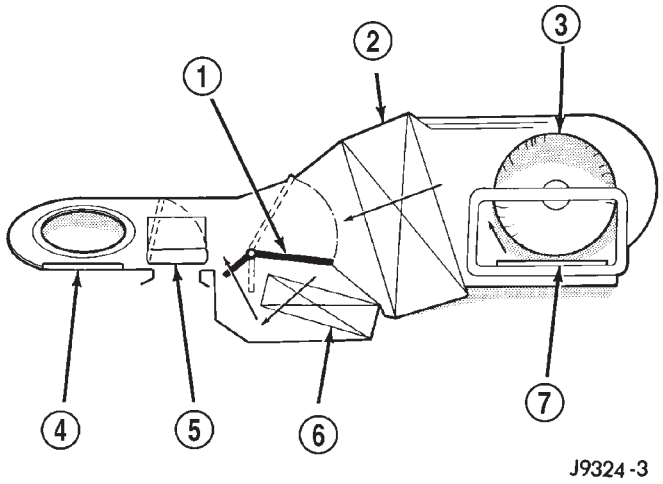

Fig. 2 Common Blend-Air HVAC System - Typical

1 – TEMPERATURE BLEND/AIR DOOR
2 – EVAPORATOR CORE
3 – BLOWER
4 – PANEL DEFROST DOOR
5 – HEAT DEFROST DOOR
6 – HEATER CORE
7 – RECIRCULATING AIR DOOR

It is also important to keep the air intake openings clear of debris because leaf particles and other debris that is small enough to pass through the cowl plenum screen can accumulate within the heater-A/C housing. The closed, warm, damp and dark environment created within the heater-A/C housing is ideal for the growth of certain molds, mildews and other fungi. Any accumulation of decaying plant matter provides an additional food source for fungal spores, which enter the housing with the fresh air. Excess debris, as well as objectionable odors created by decaying plant matter and growing fungi can be discharged into the passenger compartment during heater-A/C system operation.

DESCRIPTION AND OPERATION (Continued)

The heater and optional air conditioner are blend-air type systems. In a blend-air system, a blend-air door controls the amount of unconditioned air (or cooled air from the evaporator on models with air conditioning) that is allowed to flow through, or around, the heater core. A temperature control knob on the heater-A/C control panel determines the discharge air temperature by moving a cable, which operates the blend-air door. This allows an almost immediate manual control of the output air temperature of the system.

The mode control knob on the heater-only or heater-A/C control panel is used to direct the conditioned air to the selected system outlets. The mode control switch uses a cable to control the mode door. Models with the optional heater-A/C system also have a recirculation air door within the unit housing, which is operated by a vacuum actuator motor. On air conditioned vehicles, the outside air intake can be shut off by selecting the recirculation mode with the air flow control knob. This will move the recirculation air door to close off the outside fresh air intake and recirculates the air that is already inside the vehicle. On models with the standard heater-only system, the use of outside air cannot be controlled. This system uses outside air at all times.

On air conditioned models, the air conditioning compressor is engaged by turning the blower control knob counterclockwise from the Off position to any of the available blower speed settings. The compressor will also be engaged if the mode control knob is placed in or between the Mix or Defrost positions.

AIRFLOW DISTRIBUTION

DESCRIPTION

Based upon the system mode selected, conditioned air can exit the standard heater-only or optional heater-A/C unit housing through one or a combination of the three main housing outlets: defrost, panel or floor. The defrost outlet is located on the top of the housing, the panel outlet is located on the face of the housing and the floor outlet is located on the bottom of the housing. Once the conditioned air exits the unit housing, it is further directed through molded plastic ducts to the various outlets in the vehicle interior (Fig. 3). These outlets and their locations are as follows:

- **Defroster Outlet** - A single large defroster outlet is located in the center of the instrument panel top cover, near the base of the windshield.
- **Side Window Demister Outlets** - There are two side window demister outlets, one is located at each outboard end of the instrument panel top cover, near the belt line at the A-pillars.

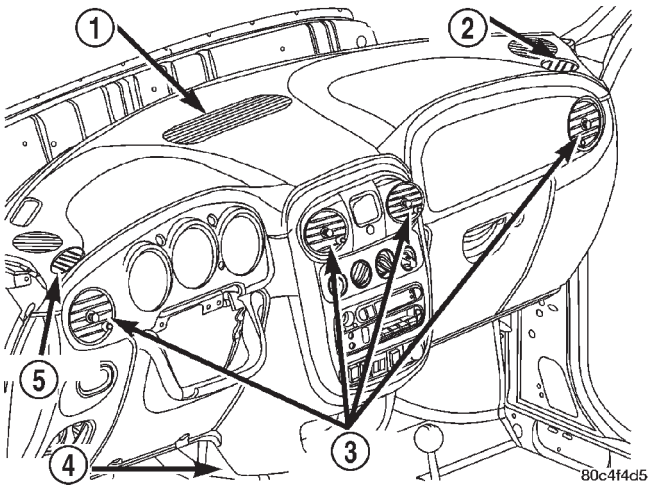

Fig. 3 HVAC Outlets

1 – DEFROST
2 – DE-MIST
3 – PANEL OUTLETS
4 – FLOOR
5 – DE-MIST

- **Panel Outlets** - There are four panel outlets in the instrument panel, one located near each outboard end of the instrument panel facing the rear of the vehicle and two located near the top of the instrument panel center bezel.
- **Front Floor Outlets** - There are four front floor outlets, two located above each side of the floor panel center tunnel near the dash panel.
- **Rear Floor Outlets** - There are two rear floor outlets, one located on each side of the floor panel center tunnel near the front of each rear seat foot well.

OPERATION

The defroster outlet receives airflow from the unit housing through the molded plastic defroster duct (Fig. 4), which is snapped onto the unit housing defroster outlet and secured by two tabs to mounting slots in the dash panel. The airflow from the defroster outlet is directed by fixed vanes in the defroster outlet grille and cannot be adjusted. The defroster outlet grille is integral to the instrument panel top cover.

The side window demister outlets receive airflow from the unit housing through the air outlet distribution duct, two molded plastic demister hoses and, on the right side only, an intermediate duct. The air outlet distribution duct is secured to the instrument panel with screws and receives airflow through the panel outlet of the unit housing. The airflow from the side window demister outlets is directed by fixed vanes in the demister outlet grilles and cannot be adjusted. The side window demister outlet grilles are integral to the instrument panel top cover.

DESCRIPTION AND OPERATION (Continued)

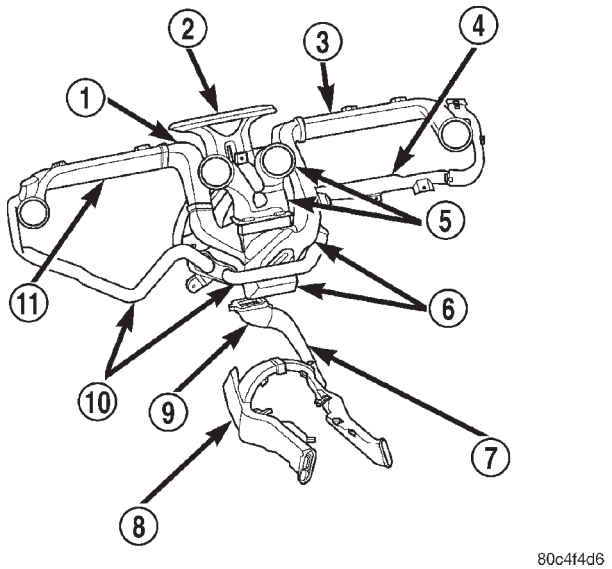

Fig. 4 HVAC Ducts

1 – INTERMEDIATE ELBOW
2 – DEFROSTER DUCT
3 – PANEL DUCT
4 – INTERMEDIATE DEMISTER DUCT
5 – CENTER AIR OUTLET DUCT
6 – AIR OUTLET DISTRIBUTION DUCT
7 – RIGHT REAR FLOOR DUCT
8 – LEFT REAR FLOOR DUCT
9 – ELBOW
10 – DEMISTER HOSES
11 – PANEL DUCT

The panel outlets also receive airflow from the unit housing through the air outlet distribution duct. Molded plastic panel outlet ducts and, on the left side only, an intermediate elbow direct airflow from the distribution duct to the outboard panel outlets, while a center air outlet duct directs airflow from the distribution duct to the two center panel outlets. The airflow from each of the panel outlets is adjustable. A knob in the center of each panel outlet grille is used in a joystick fashion to adjust a center diffuser that changes the airflow direction, and a knob on the outer edge of each panel outlet grille opens or closes a shutter to turn airflow on or off through that outlet.

The front and rear floor outlets receive airflow from the unit housing through the floor distribution duct. The front floor outlets are integral to the molded plastic floor distribution duct, which is secured to the bottom of the unit housing. A molded plastic rear seat duct elbow is fitted to the bottom of the floor distribution duct and directs airflow through a molded plastic duct beneath the carpet on the right side of the floor panel center tunnel to the right rear floor outlet. The right floor duct also features a crossover fitting that joins the right floor duct to the left floor duct over the top of the floor panel center tunnel to direct airflow to the left rear floor outlet. None of the floor outlets can be adjusted.

HEATER AND AIR CONDITIONING CONTROL

DESCRIPTION

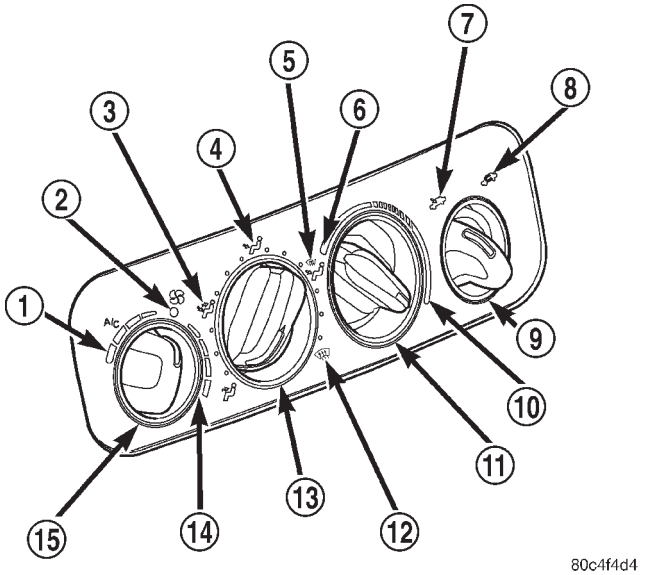

Fig. 5 Heater-A/C Controls

1 – HIGH A/C
2 – OFF
3 – BI-LEVEL
4 – FLOOR
5 – FLOOR/DEFROST
6 – COOL
7 – OUTSIDE
8 – RE-CIRC
9 – AIRFLOW (WITH A/C ONLY)
10 – WARM
11 – TEMPERATURE
12 – DEFROST
13 – MODE
14 – HIGH BLOWER
15 – BLOWER

The standard heater-only or optional heater-A/C control panel (Fig. 5) is located to the right of the instrument cluster on the instrument panel. The heater-only control panel contains three rotary-type control knobs, while the heater-A/C control panel contains four. There are separate control knobs for the blower switch, the mode control switch, temperature control and, on the heater-A/C models, an air flow control knob.

The heater-only or heater-A/C control panel cannot be repaired. If faulty or damaged, the entire unit must be replaced. The control knobs and the illumination lamps are available for service replacement. Refer to **Instrument Panel Systems** for the heater-only or heater-A/C control panel and control knob service procedures.

DESCRIPTION AND OPERATION (Continued)

OPERATION

Both the heater-only and heater-A/C systems use a combination of electrical, cable and, on heater-A/C equipped models, vacuum controls. These controls provide the vehicle operator with a number of setting options to help control the climate and comfort within the vehicle. Refer to the owner's manual in the vehicle glove box for more information on the features, use, and suggested operation of these controls.

VACUUM CONTROL SYSTEM

DESCRIPTION

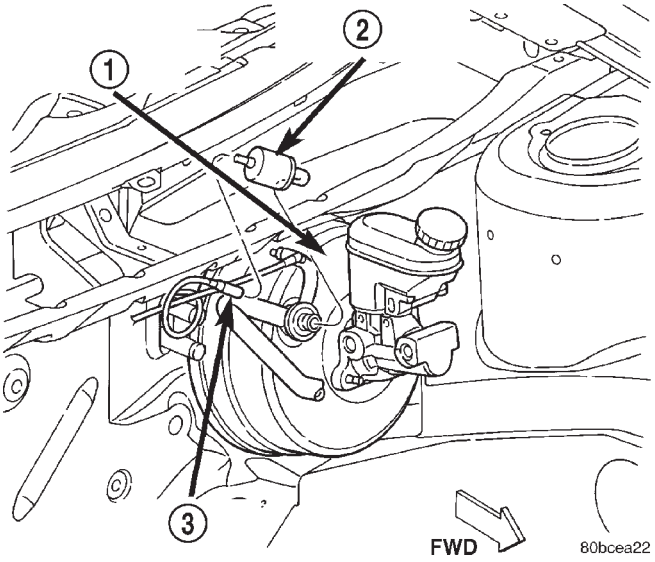

Fig. 6 A/C Vacuum Line

1 – BRAKE POWER BOOSTER
2 – A/C VACUUM CHECK VALVE
3 – VACUUM HARNESS

Only models with the optional heater-A/C system have a vacuum control system. This system uses engine vacuum to operate the recirculation air door (Fig. 6). The vacuum control system includes the following components:

- **Vacuum harness** - The vacuum harness is plastic tubing that carries engine vacuum from the source vacuum port in the engine compartment to the various other components of the system.
- **Check valve** - A one-way vacuum check valve is installed in the vacuum harness between the source vacuum port in the engine compartment and the heater-A/C control.
- **Switch** - A vacuum switch is integral to the heater-A/C control on the instrument panel.
- **Actuator** - A vacuum actuator is mounted to the outside of the heater-A/C unit housing near the recirculation air door.

OPERATION

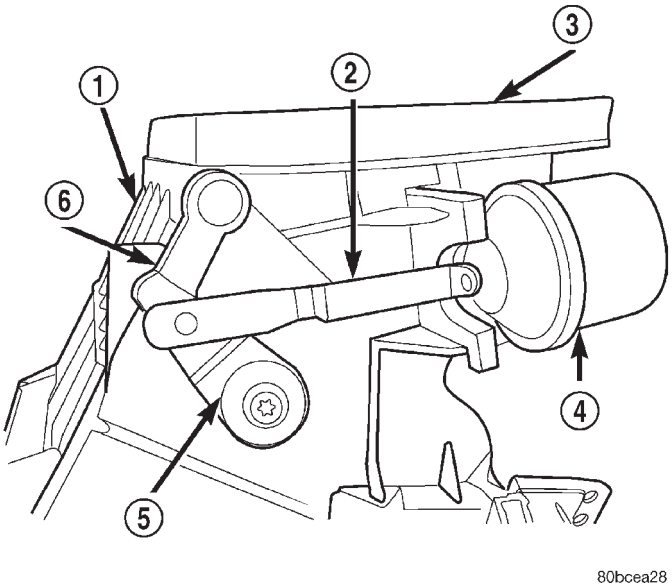

Fig. 7 Recirculation Air Door Vacuum Actuator

1 – OUTSIDE AIR/RECIRC DOOR HOUSING
2 – VACUUM ACTUATOR LINKAGE
3 – FOAM SEAL
4 – RECIRC DOOR VACUUM ACTUATOR
5 – DOOR LEVER
6 – DOOR LEVER

When engine vacuum is supplied to the actuator, the actuator linkage moves the recirculation air door to the recirculation-air position (Fig. 7). The actuator is spring loaded so that the recirculation air door moves to the default outside-air position when there is no vacuum supplied. Vacuum is switched to the actuator by placing the air flow control knob in the Recirculation position. The mode and the air flow control are mechanically interlocked so that the air flow control cannot be placed in the Recirculation position if the mode control knob is in or between the Mix and Defrost positions. The check valve prevents the vacuum in the vacuum control system from being depleted during low engine vacuum operating conditions.

BLOWER MOTOR

DESCRIPTION

The blower motor (Fig. 8) is a 12-volt, direct current motor that spins a squirrel cage-type blower wheel that is secured to the blower motor shaft. The blower motor and wheel are located near the right end of the heater-only or heater-A/C housing unit in the passenger compartment below the right end of the instrument panel. The blower motor and blower wheel can be accessed for service from the passenger compartment without removing the system housing.

DESCRIPTION AND OPERATION (Continued)

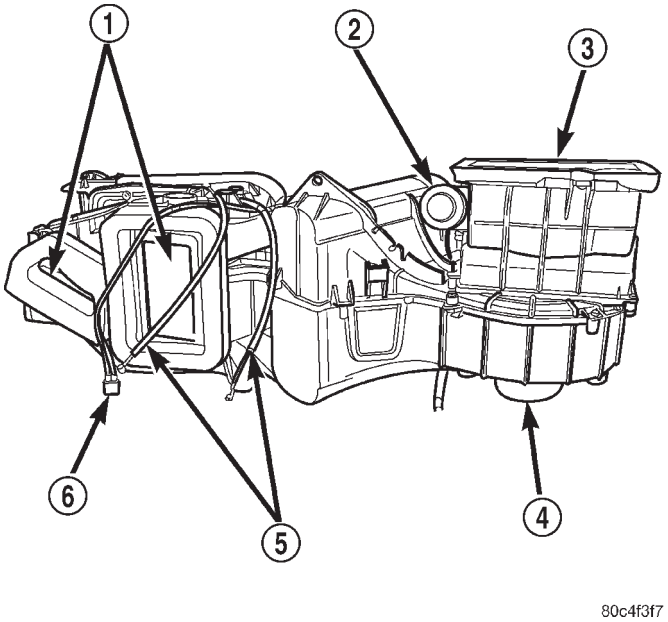

Fig. 8 HVAC Unit Housing

1 – AIR DISTRIBUTION
2 – RECIRCULATION DOOR VACUUM ACTUATOR
3 – AIR INLET
4 – BLOWER MOTOR
5 – CONTROL CABLES
6 – VACUUM HARNESS

The blower motor and blower motor wheel cannot be adjusted or repaired, and if faulty or damaged, they must be replaced.

OPERATION

The blower motor will only operate when the ignition switch is in the On position, and the blower control switch is in any position except Off. The blower motor circuit is protected by a fuse in the instrument panel fuse block. The blower motor speed is controlled by regulating the battery feed through the blower control switch and the blower motor resistor. The blower motor and wheel are used to control the velocity of air moving through the heater-only or heater-A/C unit housing. The blower motor controls the velocity of the air flowing through the heater-A/C housing by spinning the blower wheel within the housing at the selected speed.

BLOWER MOTOR RESISTOR

DESCRIPTION

There are two different blower motor resistor blocks used on this model, one for the standard heater-only system and one for the optional heater-A/C system. The blower motor resistor is installed in a mounting hole located on the right side of the cowl plenum panel below the base of the windshield (Fig. 9). It snaps into the mounting hole and is accessed

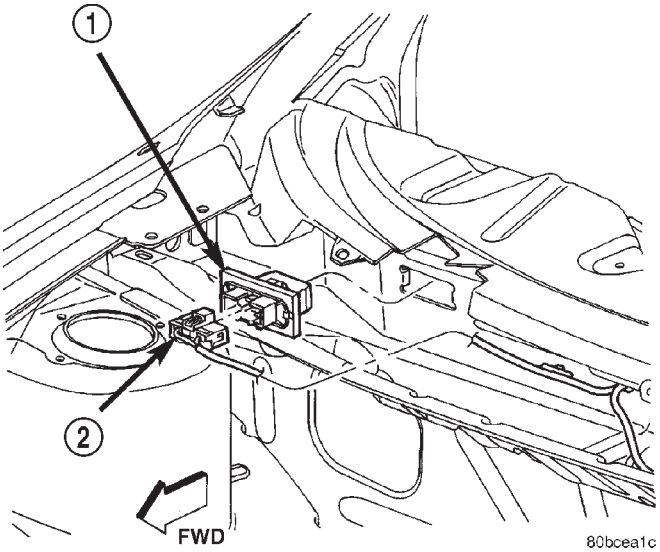

Fig. 9 Blower Motor Resistor Location

1 – RESISTOR BLOCK
2 – ELECTRICAL CONNECTOR

for service from within the cowl plenum panel by removing the cowl plenum grille and screen unit.

The blower motor resistors will get hot when in use. Do not touch resistor block if the blower motor has been running. The blower motor resistor cannot be adjusted or repaired and, if faulty or damaged, it must be replaced.

OPERATION

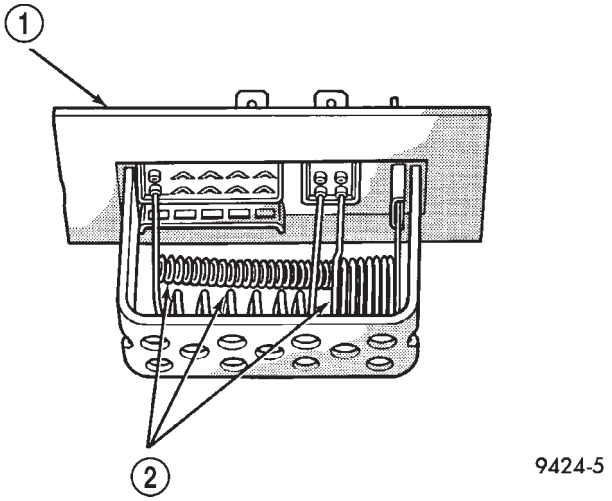

Fig. 10 Blower Motor Resistors

1 – RESISTOR BLOCK
2 – RESISTORS

The resistor has multiple resistor wires (Fig. 10), each of which will reduce the current flow through the blower motor to change the blower motor speed. The blower motor switch directs the ground path for the blower motor through the correct resistor wire to obtain the selected speed.

DESCRIPTION AND OPERATION (Continued)

With the blower motor switch in the lowest speed position, the ground path for the motor is applied through all of the resistor wires. Each higher speed selected with the blower motor switch applies the blower motor ground path through fewer of the resistor wires, increasing the blower motor speed. When the blower motor switch is in the highest speed position, the blower motor resistor is bypassed and the blower motor receives a direct path to ground through the blower motor switch.

REFRIGERANT

DESCRIPTION

The refrigerant used in this air conditioning system is a HydroFluoroCarbon (HFC), type R-134a. Unlike R-12, which is a ChloroFluoroCarbon (CFC), R-134a refrigerant does not contain ozone-depleting chlorine. R-134a refrigerant is a non-toxic, non-flammable, clear, and colorless liquefied gas.

Even though R-134a does not contain chlorine, it must be reclaimed and recycled just like CFC-type refrigerants. This is because R-134a is a greenhouse gas and can contribute to global warming.

OPERATION

R-134a refrigerant is not compatible with R-12 refrigerant in an air conditioning system. Even a small amount of R-12 added to an R-134a refrigerant system will cause compressor failure, refrigerant oil sludge or poor air conditioning system performance. In addition, the PolyAlkylene Glycol (PAG) synthetic refrigerant oils used in an R-134a refrigerant system are not compatible with the mineral-based refrigerant oils used in an R-12 refrigerant system.

R-134a refrigerant system service ports, service tool couplers and refrigerant dispensing bottles have all been designed with unique fittings to ensure that an R-134a system is not accidentally contaminated with the wrong refrigerant (R-12). There are also labels posted in the engine compartment of the vehicle and on the compressor identifying to service technicians that the air conditioning system is equipped with R-134a.

REFRIGERANT OIL

DESCRIPTION

The refrigerant oil used in R-134a refrigerant systems is a synthetic-based, PolyAlkylene Glycol (PAG), wax-free lubricant. Mineral-based R-12 refrigerant oils are not compatible with PAG oils, and should never be introduced to an R-134a refrigerant system.

There are different PAG oils available, and each contains a different additive package. The 10S15 and 10S17 compressors used in this vehicle is designed to use an ND-8 PAG refrigerant oil. Use only refrigerant oil of this same type to service the refrigerant system.

OPERATION

After performing any refrigerant recovery or recycling operation, always replenish the refrigerant system with the same amount of the recommended refrigerant oil as was removed. Too little refrigerant oil can cause compressor damage, and too much can reduce air conditioning system performance.

PAG refrigerant oil is much more hygroscopic than mineral oil, and will absorb any moisture it comes into contact with, even moisture in the air. The PAG oil container should always be kept tightly capped until it is ready to be used. After use, recap the oil container immediately to prevent moisture contamination.

A/C REFRIGERANT LINES

DESCRIPTION

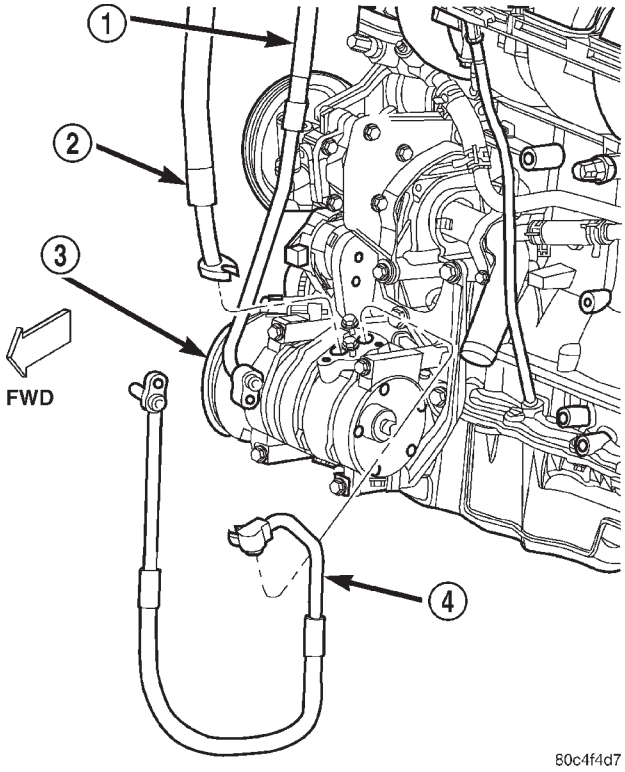

Fig. 11 A/C Refrigerant Lines - Compressor

1 – LIQUID LINE
2 – SUCTION LINE
3 – COMPRESSOR
4 – DISCHARGE LINE

The refrigerant lines and hoses (Fig. 11), (Fig. 12) and (Fig. 13) are used to carry the refrigerant between the various air conditioning system components. A barrier hose design with a nylon tube, which is sandwiched between rubber layers, is used for the R-134a air conditioning system on this vehicle. This nylon tube helps to further contain the R-134a refrigerant, which has a smaller molecular structure than R-12 refrigerant. The ends of the refrigerant hoses

DESCRIPTION AND OPERATION (Continued)

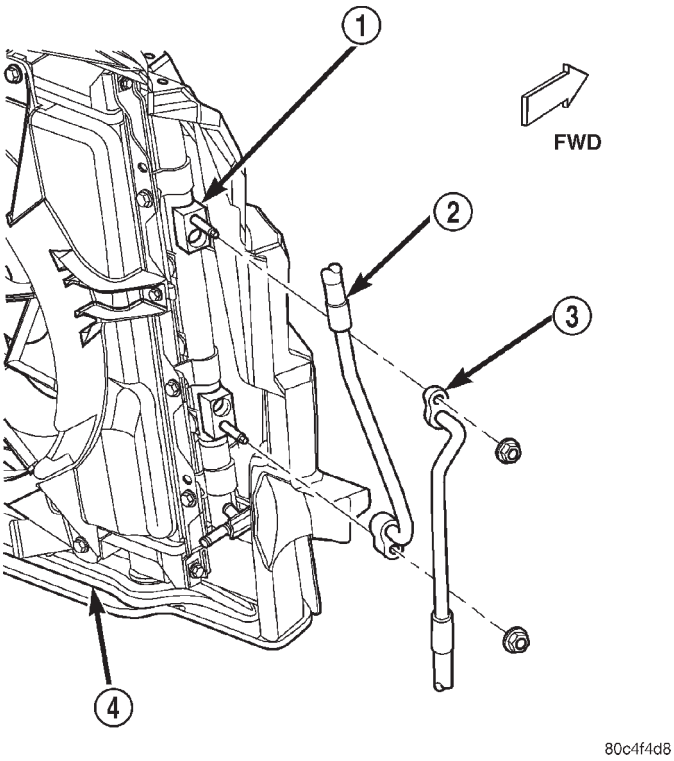

Fig. 12 A/C Refrigerant Lines - Condenser

1 – CONDENSER
2 – LIQUID LINE
3 – DISCHARGE LINE
4 – COOLING MODULE

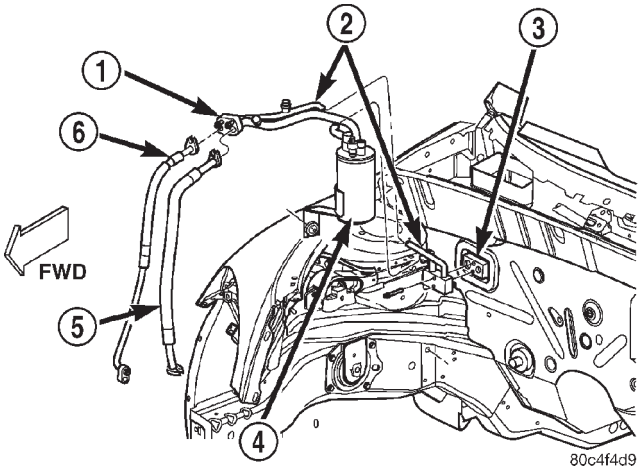

Fig. 13 A/C Refrigerant Lines - Accumulator/ Evaporator

1 – MID-LINE CONNECTOR BLOCK
2 – SUCTION & LIQUID LINE ASSEMBLY
3 – EVAPORATOR
4 – ACCUMULATOR
5 – SUCTION LINE
6 – LIQUID LINE

are made from lightweight aluminum or steel, and commonly use braze-less fittings.

Any kinks or sharp bends in the refrigerant plumbing will reduce the capacity of the entire air conditioning system. Kinks and sharp bends reduce the flow of refrigerant in the system. A good rule for the flexible hose refrigerant lines is to keep the radius of all bends at least ten times the diameter of the hose. In addition, the flexible hose refrigerant lines should be routed so they are at least 80 millimeters (3 inches) from the exhaust manifold.

OPERATION

The refrigerant lines used for this vehicle are common between the two optional engines in order to reduce complexity. The following refrigerant lines are available for service replacement on this vehicle:

- **Discharge line** - The discharge line is a flexible hose type line that is connected from the discharge port of the compressor to the inlet (upper fitting) of the condenser. It has no serviceable parts except the rubber O-ring seals used on the fittings at each end of the line. If the discharge line is damaged or faulty, it must be replaced.
- **Liquid line** - The liquid line is a flexible hose type line that is connected between the outlet (lower fitting) of the condenser and the mid-line connector block of the suction and liquid line assembly. The liquid line also contains the variable orifice valve. It has no serviceable parts except the rubber O-ring seals used on the fittings at each end of the line. If the liquid line or the variable orifice valve are damaged or faulty, the liquid line unit must be replaced.
- **Suction line** - The suction line is a flexible hose type line that is connected between the mid-line connector block of the suction and liquid line assembly and the suction port of the compressor. It has no serviceable parts except the rubber O-ring seals used on the fittings at each end of the line. If the suction line is damaged or faulty, it must be replaced.
- **Suction and liquid line assembly** - The suction and liquid line assembly is a formed tubing type line assembly that includes the mid-line connector block, a connector block for the evaporator, inlet and outlet line fittings for the accumulator and both A/C service ports (Fig. 14). The A/C service port caps, the A/C service port valve cores, the gasket used to seal the connector block at the evaporator and the rubber O-ring seals for the line fittings at the accumulator are all available for service replacement. If any other part of the suction and liquid line assembly is damaged or faulty, the assembly must be replaced.

High pressures are produced in the refrigerant system when the air conditioning compressor is operating. Extreme care must be exercised to make sure that each of the refrigerant line connections is pres-

DESCRIPTION AND OPERATION (Continued)

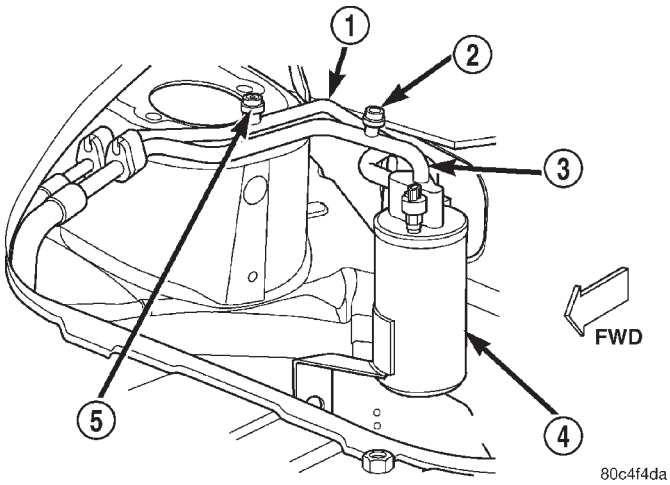

Fig. 14 A/C Service Ports

1 – LIQUID
2 – LOW SIDE SERVICE PORT
3 – SUCTION
4 – ACCUMULATOR
5 – HIGH SIDE SERVICE PORT

sure-tight and leak free. It is a good practice to inspect all flexible hose refrigerant lines at least once a year to make sure they are in good condition and properly routed.

VARIABLE ORIFICE VALVE

DESCRIPTION

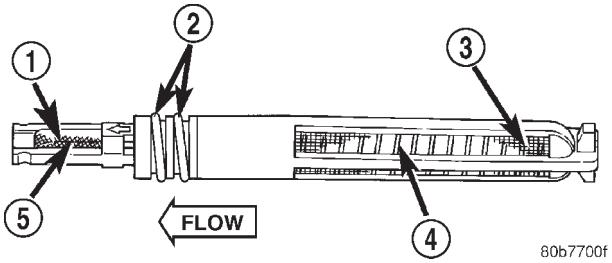

Fig. 15 Variable Orifice Valve

1 – FIXED AND VARIABLE ORIFICES
2 – ''O" RINGS
3 – INLET FILTER SCREEN
4 – BIMETAL COIL
5 – DIFFUSER SCREEN

A Variable Orifice Valve (VOV) (Fig. 15) is installed in the liquid line between the outlet of the condenser and the inlet of the evaporator. The inlet end of the Variable Orifice Valve has a nylon mesh filter screen, which filters the refrigerant and helps to reduce the potential for blockage of the metering orifices by refrigerant system contaminants. The outlet end of the tube has a nylon mesh diffuser screen. The O-rings on the plastic body of the VOV seal the tube to the inside of the liquid line and prevent refrigerant from bypassing the metering orifices.

The VOV is only serviced as an integral part of the liquid line. The VOV cannot be adjusted or repaired and, if faulty or plugged, the liquid line unit must be replaced.

OPERATION

The VOV is meters the flow of liquid refrigerant into the evaporator coil. The VOV contains two orifices which work in parallel. The fixed orifice works along with the variable port to regulate refrigerant expansion in the evaporator in a manner that is suitable for most operating conditions. The high-pressure liquid refrigerant from the condenser expands into a low-pressure liquid/vapor as it passes through the metering orifices and diffuser screen of the VOV.

The VOV varies the flow of refrigerant in response to the temperature of the refrigerant exiting the condenser. A thermostatic bimetal coil wrapped around the valve body is affected by the refrigerant temperature changes, which opens or closes the variable port to regulate refrigerant flow. As the refrigerant temperature increases, the variable port is progressively closed. A higher temperature (while idling) produces more restriction. A lower temperature (at road speed) produces less restriction.

CONDENSER

DESCRIPTION

The condenser (Fig. 16) is integral to a cooling module which includes the radiator, the electric cooling fan, the fan shroud, air seals and an automatic transmission oil cooler on models so equipped. The cooling module is located in the air flow in the front of the engine compartment behind the front grille.

The condenser cannot be repaired or adjusted and, if faulty or damaged, it must be replaced. The cooling module must be removed from the vehicle in order to access the condenser for service.

OPERATION

The condenser is a heat exchanger that allows the high-pressure refrigerant gas being discharged by the compressor to give up its heat to the air passing over the condenser fins. When the refrigerant gas gives up its heat, it condenses. When the refrigerant leaves the condenser, it has become a high-pressure liquid refrigerant.

The volume of air flowing over the condenser fins is critical to the proper cooling performance of the air conditioning system. Therefore, it is important that there are no objects placed in front of the radiator grille openings in the front of the vehicle or foreign material on the condenser fins that might obstruct proper air flow. Also, any factory-installed air seals or shrouds must be properly reinstalled following radiator or condenser service.

DESCRIPTION AND OPERATION (Continued)

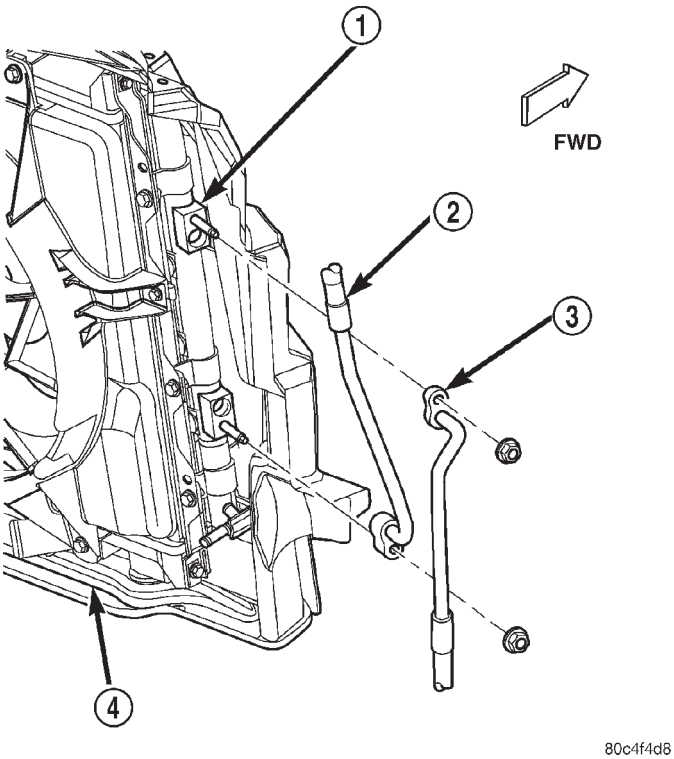

Fig. 16 Condenser

1 – CONDENSER
2 – LIQUID LINE
3 – DISCHARGE LINE
4 – COOLING MODULE

EVAPORATOR

DESCRIPTION

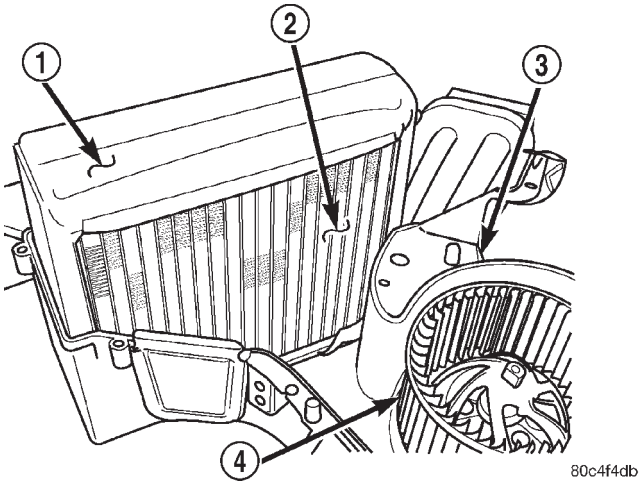

Fig. 17 Evaporator

1 – FOAM WRAP
2 – EVAPORATOR
3 – LOWER HEATER-A/C UNIT HOUSING
4 – BLOWER WHEEL

The evaporator (Fig. 17) is located in the heater-A/C unit housing, under the instrument panel. The evaporator is positioned in the heater-A/C housing so that all air that enters the housing must pass over the fins of the evaporator before it is distributed through the system ducts and outlets. However, air passing over the evaporator fins will only be conditioned when the compressor is engaged and circulating refrigerant through the evaporator tubes.

The heater-A/C unit housing must be removed from the vehicle to access the evaporator for service. The evaporator cannot be adjusted or repaired and, if faulty or damaged, it must be replaced.

OPERATION

Refrigerant enters the evaporator from the variable orifice valve as a low-temperature, low-pressure liquid. As air flows over the fins of the evaporator, the humidity in the air condenses on the fins, and the heat from the air is absorbed by the refrigerant. Heat absorption causes the refrigerant to boil and vaporize. The refrigerant becomes a low-pressure gas when it leaves the evaporator.

CONDENSATE DRAIN TUBE

DESCRIPTION

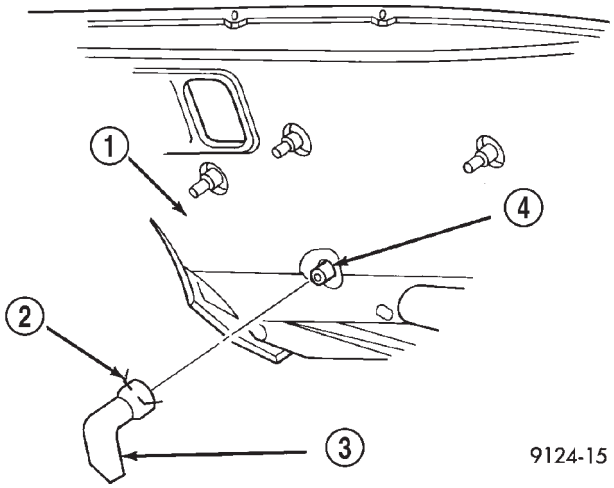

Fig. 18 Condensate Drain Tube

1 – DASH PANEL (UNDER HOOD RIGHT SIDE)
2 – CLAMP
3 – CONDENSATE DRAIN TUBE
4 – NIPPLE-A/C HEATER HOUSING

On vehicles equipped with the optional heater-A/C system the condensate drain tube is a small molded rubber tube that is located in the engine compartment on the right side of the dash panel (Fig. 18). This rubber tube is secured with a wire type clamp to the heater-A/C housing drain, which is a molded plastic nipple that protrudes through a hole near the

DESCRIPTION AND OPERATION (Continued)

bottom of the dash panel from the passenger compartment. The loose end of the condensate drain tube is tapered to prevent of road splash or other contaminants from entering the heater-A/C unit housing from outside the vehicle.

If water leaks from the heater-A/C housing onto the floor in the passenger compartment, the condensate drain tube should be inspected for proper installation or removed and cleaned of all foreign material that might prevent proper drainage. The condensate drain tube is available for service replacement.

OPERATION

The evaporator is mounted in a tray formation that is molded into the lower half of the heater-A/C unit housing. Condensation water that accumulates from the evaporator in this tray when the air conditioning is operating exits the housing through the housing drain, which is a molded plastic nipple that protrudes from the dash panel side of the evaporator tray. On the engine compartment side of the dash panel, the condensate drain tube directs this condensate water to the ground. This tube must be kept open to prevent condensate water from collecting in the bottom of the heater-A/C unit housing.

ACCUMULATOR

DESCRIPTION

The accumulator (Fig. 19) is mounted in the engine compartment between the evaporator outlet and the compressor suction port. An integral mounting bracket is used to secure the accumulator to the right side rail with a screw. Two connectors of the suction and liquid line assembly are sealed to an integral connector block on the top of the accumulator canister with rubber O-ring seals and secured there with two screws. A threaded fitting on the top of the accumulator canister provides the port through which the low pressure clutch cycling switch monitors the refrigerant system pressures.

The accumulator cannot be repaired and, if faulty or damaged, it must be replaced. The suction and liquid line assembly, the rubber O-rings and the low pressure clutch cycling switch are available for service replacement.

OPERATION

Refrigerant enters the accumulator canister as a low pressure vapor through the inlet tube. Any liquid, oil-laden refrigerant falls to the bottom of the canister, which acts as a separator. A desiccant bag located inside the accumulator canister absorbs any moisture which may have entered and become trapped within the refrigerant system.

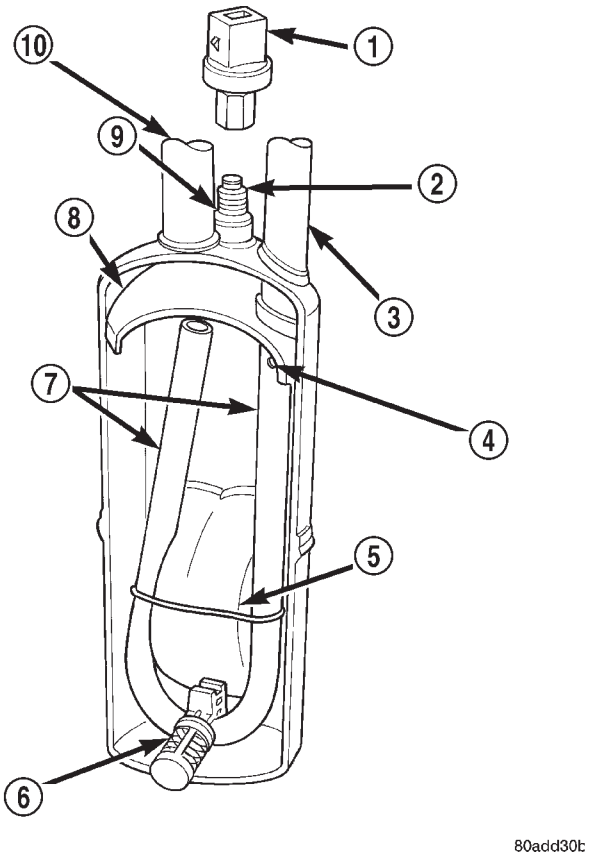

Fig. 19 Accumulator - Typical

1 – LOW PRESSURE CYCLING CLUTCH SWITCH
2 – PRESSURE SWITCH FITTING
3 – OUTLET TO COMPRESSOR
4 – ANTI-SIPHON HOLE
5 – DESICCANT BAG
6 – OIL RETURN ORIFICE FILTER
7 – VAPOR RETURN TUBE
8 – ACCUMULATOR DOME
9 – O-RING SEAL
10 – INLET FROM EVAPORATOR

LOW PRESSURE CLUTCH CYCLING SWITCH

DESCRIPTION

The low pressure clutch cycling switch (Fig. 20) is a single pole, single throw, pressure actuated switch that is installed in a threaded port into the suction passage of the accumulator. The switch is located on the top of the accumulator in a fitting that contains a Schrader type valve, which allows the switch to be serviced without discharging the refrigerant system. The accumulator fitting is equipped with an O-ring to seal the switch plumbing connection.

The low pressure clutch cycling switch is a factory-calibrated unit. The switch cannot be adjusted or repaired and, if faulty or damaged, it must be replaced.

DESCRIPTION AND OPERATION (Continued)

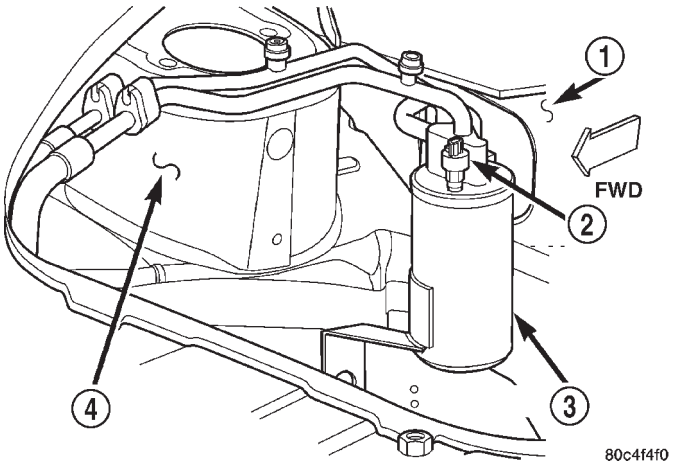

Fig. 20 Low Pressure Clutch Cycling Switch

1 – DASH PANEL
2 – LOW PRESSURE CLUTCH CYCLING SWITCH
3 – ACCUMULATOR
4 – LEFT FRONT STRUT TOWER

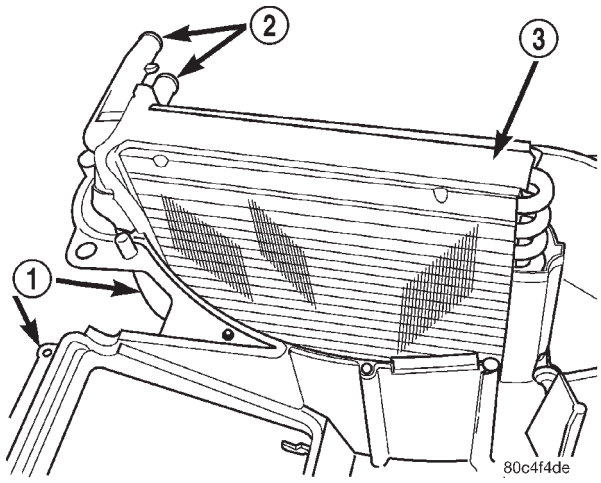

Fig. 21 Heater Core

1 – LOWER HEATER-A/C UNIT HOUSING
2 – HEATER CORE HOSE NIPPLES
3 – HEATER CORE

OPERATION

The low pressure clutch cycling switch monitors the pressure of the refrigerant leaving the accumulator to the compressor. The switch is connected in series electrically with the heater-A/C control blower and mode switches and the high pressure cut out switch between ground and the Powertrain Control Module (PCM). The switch contacts open or close the path to ground, signaling the PCM to turn the compressor clutch on and off. This regulates the refrigerant system pressure and controls evaporator temperature. Controlling the evaporator temperature prevents condensate water on the evaporator fins from freezing and obstructing air conditioning system air flow.

The low pressure switch contacts are open when the suction pressure is approximately 152 kPa (22 psi) or lower. The switch contacts will close when the suction pressure rises to approximately 234 to 262 kPa (34 to 38 psi) or above. Lower ambient temperatures, below approximately -1° C (30° F), will also cause the switch contacts to open. This is due to the pressure/temperature relationship of the refrigerant in the system.

HEATER CORE

DESCRIPTION

The heater core (Fig. 21) is located in the heater-A/C unit housing, under the instrument panel. It is a heat exchanger made of rows of tubes and fins. One end of the core is fitted with a molded plastic tank that includes the integral heater core hose nipples.

OPERATION

Engine coolant is circulated through heater hoses to the heater core at all times. As the coolant flows through the heater core, heat removed from the engine is transferred to the heater core fins and tubes. Air directed through the heater core picks up the heat from the heater core fins. The blend air door allows control of the heater output air temperature by controlling how much of the air flowing through the heater-A/C housing is directed through the heater core. The blower motor speed controls the volume of air flowing through the heater-A/C housing.

The heater core cannot be repaired and, if faulty or damaged, it must be replaced. Refer to Cooling System for more information on the engine cooling system, the engine coolant and the heater hoses.

COMPRESSOR

DESCRIPTION

The compressor (Fig. 22) used on this vehicle can be one of two models, depending upon the transmission in the vehicle. Vehicles with a manual transmission use the Nippondenso 10S15 compressor, while vehicles with an automatic transmission use the Nippondenso 10S17 unit. These compressors use an aluminum swash plate, teflon coated pistons and aluminum sleeveless cylinder walls. A high pressure cut out switch is located on the back cover of the compressor.

The compressor is secured to the lower front strut-to-engine bracket with four screws. The lower front strut-to-engine bracket is located on the lower, forward skirt of the engine block which is located in the right front corner of the engine compartment.

DESCRIPTION AND OPERATION (Continued)

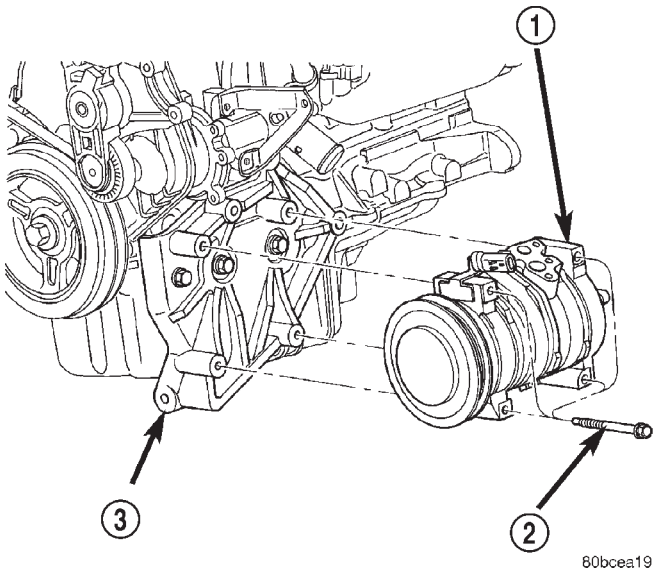

Fig. 22 Compressor

1 – A/C COMPRESSOR
2 – MOUNTING BOLTS
3 – LOWER FRONT STRUT-TO-ENGINE BRACKET

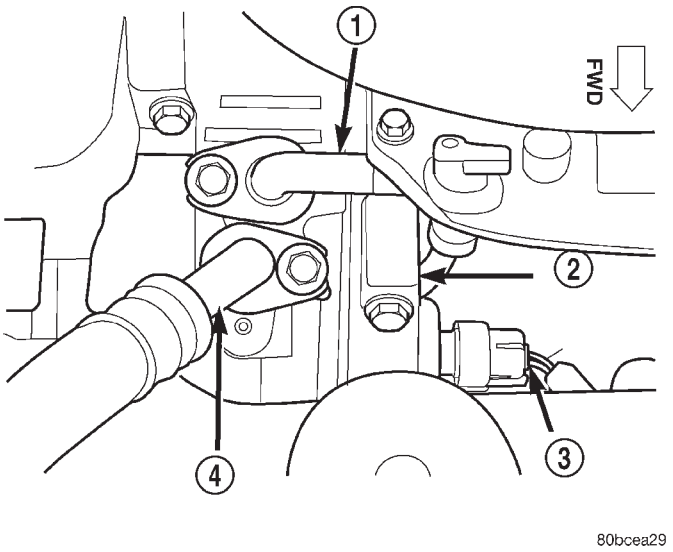

Fig. 23 High Pressure Cut Out Switch Location

1 – DISCHARGE LINE
2 – A/C COMPRESSOR
3 – HIGH PRESSURE CUT OUT SWITCH
4 – SUCTION LINE

The compressor cannot be repaired. If faulty or damaged, the entire compressor unit must be replaced. The compressor clutch, pulley, clutch coil and the high pressure cut out switch are available for service replacement.

OPERATION

The compressor is driven by the engine through an electric clutch, drive pulley and belt arrangement. The compressor is lubricated by refrigerant oil that is circulated throughout the refrigerant system with the refrigerant.

The compressor draws in low-pressure refrigerant vapor from the evaporator through its suction port. It then compresses the refrigerant into a high-pressure, high-temperature refrigerant vapor. The compressor pumps high-pressure refrigerant vapor to the condenser through the compressor discharge port.

HIGH PRESSURE CUT OUT SWITCH

DESCRIPTION

The high pressure cut out switch is a single pole, single throw, pressure actuated switch that is installed in a port into the discharge passage of the compressor. The high pressure cut out switch is located on the back cover of the compressor (Fig. 23).

The high pressure cut out switch is a factory-calibrated unit. The switch cannot be adjusted or repaired and, if faulty or damaged, it must be replaced.

OPERATION

The high pressure cut out switch monitors the pressure of the refrigerant leaving the compressor. The switch is connected in series electrically with the heater-A/C control blower and mode switches and the low pressure clutch cycling switch between ground and the Powertrain Control Module (PCM). The switch contacts open or close the path to ground, signaling the PCM to turn the compressor clutch on and off. This prevents compressor operation when the discharge pressure exceeds about 3240 kPa (470 psi).

COMPRESSOR CLUTCH

DESCRIPTION

The compressor clutch assembly consists of a stationary electromagnetic coil with a zener diode, a hub bearing and pulley assembly, and a clutch plate (Fig. 24). The electromagnetic coil unit and the hub bearing and pulley assembly are each retained on the nose of the compressor front housing with snap rings. The clutch plate is keyed to the compressor shaft and secured with a screw.

The compressor clutch and coil are available for service replacement. The clutch coil zener diode is integral to the clutch coil wiring pigtail and connector unit and, if faulty or damaged, the clutch electromagnetic coil unit must be replaced.

DESCRIPTION AND OPERATION (Continued)

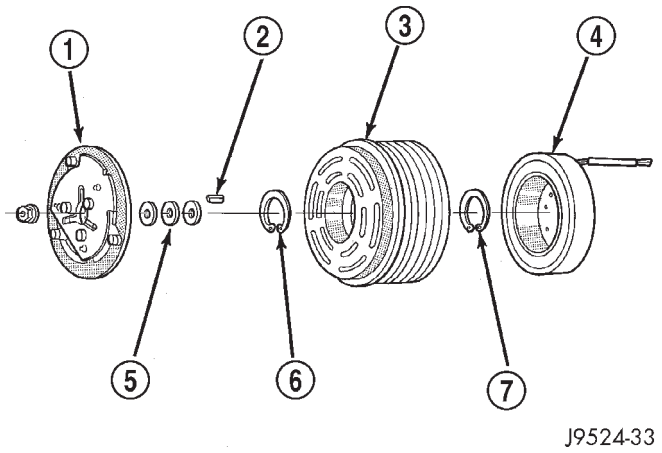

Fig. 24 Compressor Clutch - Typical

1 – CLUTCH PLATE
2 – SHAFT KEY
3 – PULLEY
4 – COIL
5 – CLUTCH SHIMS
6 – SNAP RING
7 – SNAP RING

OPERATION

The compressor clutch components provide the means to engage and disengage the compressor from the engine serpentine accessory drive belt. When the clutch coil is energized, it magnetically draws the clutch into contact with the pulley and drives the compressor shaft. When the coil is not energized, the pulley freewheels on the clutch hub bearing, which is part of the pulley.

A zener diode is connected in parallel with the clutch electromagnetic coil. This diode controls the dissipation of voltage induced into the coil windings by the collapsing of the electromagnetic fields that occurs when the compressor clutch is disengaged. The zener diode dissipates this induced voltage by regulating a current path to ground. This arrangement serves to protect other circuits and components from potentially damaging voltage spikes in the vehicle electrical system that might occur if the voltage induced in the clutch coil windings could not be dissipated.

The compressor clutch engagement is controlled by several components: the blower speed and mode switches on the heater-A/C control panel, the low pressure clutch cycling switch on the accumulator, the high pressure cut out switch on the compressor, the Powertrain Control Module (PCM) and the A/C compressor clutch relay in the Power Distribution Center (PDC). The PCM may delay compressor clutch engagement for up to thirty seconds. Refer to Group 14 - Fuel System for more information on the PCM controls.

A/C COMPRESSOR CLUTCH RELAY

DESCRIPTION

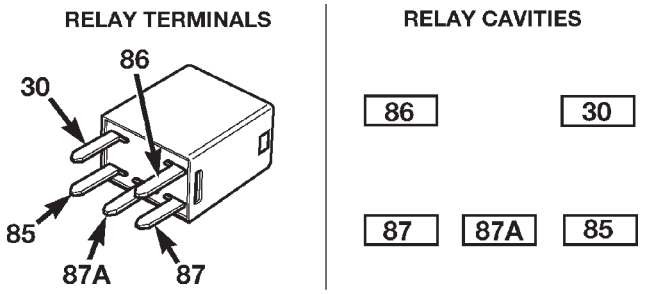

TERMINAL LEGEND	
NUMBER	IDENTIFICATION
30	COMMON FEED
85	COIL GROUND
86	COIL BATTERY
87	NORMALLY OPEN
87A	NORMALLY CLOSED

80c4f4df

Fig. 25 A/C Compressor Clutch Relay

The A/C compressor clutch relay (Fig. 25) is a International Standards Organization (ISO) micro-relay. Relays conforming to the ISO specifications have common physical dimensions, current capacities, terminal patterns, and terminal functions. The ISO micro-relay terminal functions are the same as a conventional ISO relay. However, the ISO micro-relay terminal pattern (or footprint) is different, the current capacity is lower, and the physical dimensions are smaller than those of the conventional ISO relay. The A/C compressor clutch relay is located in the Power Distribution Center (PDC) in the engine compartment. See the fuse and relay layout label affixed to the inside surface of the PDC cover for A/C compressor clutch relay identification and location.

The black, molded plastic case is the most visible component of the A/C compressor clutch relay. Five male spade-type terminals extend from the bottom of the base to connect the relay to the vehicle electrical system, and the ISO designation for each terminal is molded into the base adjacent to each terminal. The ISO terminal designations are as follows:

- **30 (Common Feed)** - This terminal is connected to the movable contact point of the relay.
- **85 (Coil Ground)** - This terminal is connected to the ground feed side of the relay control coil.
- **86 (Coil Battery)** - This terminal is connected to the battery feed side of the relay control coil.
- **87 (Normally Open)** - This terminal is connected to the normally open fixed contact point of the relay.
- **87A (Normally Closed)** - This terminal is connected to the normally closed fixed contact point of the relay.

DESCRIPTION AND OPERATION (Continued)

The factory-installed A/C compressor clutch relay cannot be adjusted or repaired. If the relay is damaged or faulty, it must be replaced.

OPERATION

The A/C compressor clutch relay is an electromechanical switch that uses a low current input from the Powertrain Control Module (PCM) to control the high current output to the Compressor clutch electromagnetic coil. The movable common feed contact point is held against the fixed normally closed contact point by spring pressure. When the relay coil is energized, an electromagnetic field is produced by the coil windings. This electromagnetic field draws the movable relay contact point away from the fixed normally closed contact point, and holds it against the fixed normally open contact point. When the relay coil is de-energized, spring pressure returns the movable contact point back against the fixed normally closed contact point. The resistor or diode is connected in parallel with the relay coil in the relay, and helps to dissipate voltage spikes and electromagnetic interference that can be generated as the electromagnetic field of the relay coil collapses.

The A/C compressor clutch relay terminals are connected to the vehicle electrical system through a receptacle in the PDC. The inputs and outputs of the A/C compressor clutch relay include:

- The common feed terminal (30) receives a battery current input from a fuse in the PDC through a fused B(+) circuit at all times.
- The coil ground terminal (85) receives a ground input from the PCM through the A/C compressor clutch relay control circuit only when the PCM electronically pulls the control circuit to ground.
- The coil battery terminal (86) receives a battery current input from a fuse in the fuseblock module through a fused ignition switch output (run-start) circuit only when the ignition switch is in the On or Start positions.
- The normally open terminal (87) provides a battery current output to the compressor clutch coil through the A/C compressor clutch relay output circuit only when the A/C compressor clutch relay coil is energized.
- The normally closed terminal (87A) is not connected to any circuit in this application, but provides a battery current output only when the A/C compressor clutch relay coil is de-energized.

Refer to the appropriate wiring information for complete air conditioning-heater wiring diagrams.

DIAGNOSIS AND TESTING

SERVICE WARNINGS AND PRECAUTIONS

WARNING:

- **THE AIR CONDITIONING SYSTEM CONTAINS REFRIGERANT UNDER HIGH PRESSURE. SEVERE PERSONAL INJURY MAY RESULT FROM IMPROPER SERVICE PROCEDURES. REPAIRS SHOULD ONLY BE PERFORMED BY QUALIFIED SERVICE PERSONNEL.**
- **AVOID BREATHING THE REFRIGERANT AND REFRIGERANT OIL VAPOR OR MIST. EXPOSURE MAY IRRITATE THE EYES, NOSE, AND/OR THROAT. WEAR EYE PROTECTION WHEN SERVICING THE AIR CONDITIONING REFRIGERANT SYSTEM. SERIOUS EYE INJURY CAN RESULT FROM DIRECT CONTACT WITH THE REFRIGERANT. IF EYE CONTACT OCCURS, SEEK MEDICAL ATTENTION IMMEDIATELY.**
- **DO NOT EXPOSE THE REFRIGERANT TO OPEN FLAME. POISONOUS GAS IS CREATED WHEN REFRIGERANT IS BURNED. AN ELECTRONIC LEAK DETECTOR IS RECOMMENDED.**
- **IF ACCIDENTAL SYSTEM DISCHARGE OCCURS, VENTILATE THE WORK AREA BEFORE RESUMING SERVICE. LARGE AMOUNTS OF REFRIGERANT RELEASED IN A CLOSED WORK AREA WILL DISPLACE THE OXYGEN AND CAUSE SUFFOCATION.**
- **THE EVAPORATION RATE OF R-134a REFRIGERANT AT AVERAGE TEMPERATURE AND ALTITUDE IS EXTREMELY HIGH. AS A RESULT, ANYTHING THAT COMES IN CONTACT WITH THE REFRIGERANT WILL FREEZE. ALWAYS PROTECT THE SKIN OR DELICATE OBJECTS FROM DIRECT CONTACT WITH THE REFRIGERANT.**
- **THE R-134a SERVICE EQUIPMENT OR THE VEHICLE REFRIGERANT SYSTEM SHOULD NOT BE PRESSURE TESTED OR LEAK TESTED WITH COMPRESSED AIR. SOME MIXTURES OF AIR AND R-134a HAVE BEEN SHOWN TO BE COMBUSTIBLE AT ELEVATED PRESSURES. THESE MIXTURES ARE POTENTIALLY DANGEROUS, AND MAY RESULT IN FIRE OR EXPLOSION CAUSING INJURY OR PROPERTY DAMAGE.**

DIAGNOSIS AND TESTING (Continued)

CAUTION:

- **Liquid refrigerant is corrosive to metal surfaces. Follow the operating instructions supplied with the service equipment being used.**
- **Never add R-12 to a refrigerant system designed to use R-134a. Damage to the system will result.**
- **R-12 refrigerant oil must not be mixed with R-134a refrigerant oil. They are not compatible.**
- **Do not use R-12 equipment or parts on the R-134a system. Damage to the system will result.**
- **Do not overcharge the refrigerant system. This will cause excessive compressor head pressure and can cause noise and system failure.**
- **Recover the refrigerant before opening any fitting or connection. Open the fittings with caution, even after the system has been discharged. Never open or loosen a connection before recovering the refrigerant.**
- **The refrigerant system must always be evacuated before charging.**
- **Do not open the refrigerant system or uncap a replacement component until you are ready to service the system. This will prevent contamination in the system.**
- **Before disconnecting a component, clean the outside of the fittings thoroughly to prevent contamination from entering the refrigerant system.**
- **Immediately after disconnecting a component from the refrigerant system, seal the open fittings with a cap or plug.**
- **Before connecting an open refrigerant fitting, always install a new seal or gasket. Coat the fitting and seal with clean refrigerant oil before connecting.**
- **Do not remove the sealing caps from a replacement component until it is to be installed.**
- **When installing a refrigerant line, avoid sharp bends that may restrict refrigerant flow. Position the refrigerant lines away from exhaust system components or any sharp edges, which may damage the line.**
- **Tighten refrigerant fittings only to the specified torque. The aluminum fittings used in the refrigerant system will not tolerate overtightening.**
- **When disconnecting a refrigerant fitting, use a wrench on both halves of the fitting. This will prevent twisting of the refrigerant lines or tubes.**
- **Refrigerant oil will absorb moisture from the atmosphere if left uncapped. Do not open a container of refrigerant oil until you are ready to use it. Replace the cap on the oil container immediately after using. Store refrigerant oil only in a clean, airtight, and moisture-free container.**
- **Keep service tools and the work area clean. Contamination of the refrigerant system through careless work habits must be avoided.**

COOLING SYSTEM REQUIREMENTS

To maintain the performance level of the heating-air conditioning system, the engine cooling system must be properly maintained. The use of a bug screen is not recommended. Any obstructions in front of the radiator or condenser will reduce the performance of the air conditioning and engine cooling systems.

The engine cooling system includes the heater core and the heater hoses. Refer to **Cooling System** for more information before the opening of, or attempting any service to the engine cooling system.

A/C PERFORMANCE TEST

NOTE: At the time that this service information was published, the data required for performing this test had not yet been released by engineering. When this data does become available, a Technical Service Bulletin (TSB) will be issued to update this service information.

HEATER PERFORMANCE TEST

PRE-DIAGNOSTIC PREPARATIONS

Review the Safety Precautions and Warnings in this group before performing the following procedures.

Check the coolant level, drive belt tension, vacuum line connections, radiator air flow and radiator fan operation. Start the engine and allow it to warm up to normal operating temperature.

WARNING: DO NOT REMOVE THE RADIATOR CAP WHEN THE ENGINE IS HOT. PERSONAL INJURY MAY RESULT.

If the engine has been operating, wait 15 minutes after the engine is turned off before removing the cap from the radiator. Place a rag over the cap and turn it to the first safety stop. Allow pressure to escape through the overflow tube. When the cooling system stabilizes, remove the cap completely.

MAXIMUM HEATER OUTPUT: TEST AND ACTION

Engine coolant is provided to the heater core through two 16 mm (5/8 inch inside diameter) heater hoses. With the engine idling at normal operating temperature, set the heater-A/C controls as follows: Temperature control to full Heat, Mode control to Floor, and Blower control to the highest speed setting. Using a test thermometer, check the air temperature coming from the floor outlets. Refer to the Temperature Reference Chart.

DIAGNOSIS AND TESTING (Continued)

TEMPERATURE REFERENCE CHART

Ambient Temp.		Minimum Floor Outlet Temp.	
Celsius	Fahrenheit	Celsius	Fahrenheit
15.5°	60°	62.2°	144°
21.1°	70°	63.8°	147°
26.6°	80°	65.5°	150°
32.2°	90°	67.2°	153°

If the floor outlet air temperature is insufficient, refer to Group 7, Cooling System for specifications. Both heater hoses should be HOT to the touch (the coolant return hose should be slightly cooler than the supply hose). If the coolant return hose is much cooler than the supply hose, locate and repair the engine coolant flow obstruction in the heater system.

POSSIBLE LOCATIONS OR CAUSE OF OBSTRUCTED COOLANT FLOW

- Pinched or kinked heater hoses.
- Improper heater hose routing.
- Plugged heater hoses or supply and return ports at the engine cooling system connections, refer to Group 7, Cooling System.
- Plugged heater core.
- Air locked heater core.

If coolant flow is verified and heater floor outlet temperature is insufficient, a mechanical problem may exist.

POSSIBLE LOCATION OR CAUSE OF INSUFFICIENT HEAT

- Obstructed cowl air intake.
- Obstructed heater system outlets.
- Blend-air door not functioning properly.

TEMPERATURE CONTROL

If heater floor outlet temperature cannot be adjusted with the heater-A/C control Temperature knob, one of the following could require service:

- Blend-air door binding.
- Faulty temperature control cable.
- Improper engine coolant temperature.
- Faulty heater-A/C control.

VACUUM CONTROL SYSTEM

Use an adjustable vacuum test set (Special Tool C-3707-B) and a suitable vacuum pump to test the heater-A/C vacuum control system. With a finger placed over the end of the vacuum test hose probe (Fig. 26), adjust the bleed valve on the test set gauge to obtain a vacuum of exactly 27 kPa (8 in. Hg.). Release and block the end of the probe several times to verify that the vacuum reading returns to the exact 27 kPa (8 in. Hg.) setting. Otherwise, a false reading will be obtained during testing.

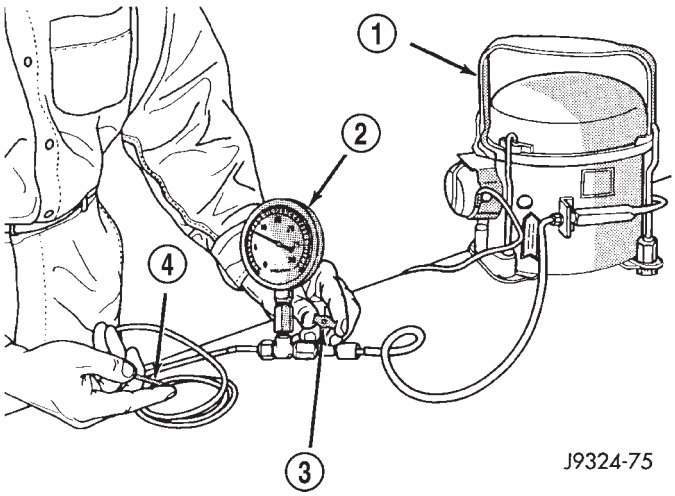

Fig. 26 Adjust Vacuum Test Bleed Valve - Typical

1 – VACUUM PUMP TOOL C-4289
2 – VACUUM TEST SET C-3707
3 – BLEED VALVE
4 – PROBE

DIAGNOSIS AND TESTING (Continued)

HEATER-A/C VACUUM SYSTEM DIAGNOSIS

CONDITION	POSSIBLE CAUSES	CORRECTION
NO FORCED AIR IN HEAT POSITION	1. Vacuum line pinched or leaking. 2. Faulty heat defroster or mode door. 3. Faulty selector switch. 4. Vacuum check valve.	1. Locate and repair vacuum leak or pinched line. 2. Test actuators and door operation. Repair as necassary. 3. Test selector switch and replace if necessary. 4. Test check valve and replace if necessary.
NO FORCED AIR IN PANEL POSITION	1. Vacuum line pinched or leaking. 2. Faulty mode door. 3. Faulty selector switch. 4. Vacuum check valve.	1. Locate and repair vacuum leak or pinched line. 2. Test actuator and door operation. Repair as necessary. 3. Test selector switch and replace if necessary. 4. Test check valve and replace if necessary.
NO FORCED AIR IN DEFROST POSITION	1. Vacuum line pinched or leaking. 2. Faulty heat, defroster, or mode door. 3. Faulty selector switch. 4. Vacuum check valve.	1. Locate and repair vacuum leak or pinched line. 2. Test actuators and door operation. Repair as necessary. 3. Test selector switch and replace if necessary. 4. Test check valve and replace if necessary.

ONE-WAY CHECK VALVE

(1) Disconnect the heater-A/C vacuum supply (Black) tube in the engine compartment. This tube passes through an opening in the dash panel.

(2) Remove the one-way vacuum check valve. The valve is located on the (Black) vacuum supply hose at the brake power booster.

(3) Connect the test set vacuum supply hose to the heater side of the valve. When connected to this side of the check valve, no vacuum should pass and the test set gauge should return to the 27 kPa (8 in. Hg.) setting. If OK, go to step Step 4. If not OK, replace the faulty valve.

(4) Connect the test set vacuum supply hose to the engine vacuum side of the valve. When connected to this side of the check valve, vacuum should flow through the valve without restriction. If not OK, replace the faulty valve.

HEATER-A/C CONTROLS

The operation of the recirculation air door can be viewed by removing the blower motor and looking up into the heater-A/C unit housing inlet. Refer to Blower Motor for the proper service procedures.

(1) Connect the test set vacuum probe to the heater-A/C vacuum supply (Black) hose in the engine compartment. Position the test set gauge so that it can be viewed from the passenger compartment.

(2) Start with the Mode control in the Panel position and the Airflow control in the Outside position.

(3) Move the Airflow control to the Recirculation position (the recirculation air door should move to the inside-air position). After a short pause move the Mode control to the Defrost position (the recirculation air door should move to the outside-air position). The test gauge should return to the calibrated setting of 27 kPa (8 in. Hg.) after each selection is made. If the gauge cannot achieve the calibrated setting, the vacuum circuit or a component has a leak.

(4) If the gauge achieves the calibrated setting but the recirculation air door does not move, there is either a pinched vacuum line or a failed actuator.

LOCATING VACUUM LEAKS

(1) Connect the test vacuum probe to the vehicles (Black) supply hose. Position the vacuum test gauge so it can be viewed from the passenger compartment.

(2) Place the Mode control in the Panel position and the Airflow control in the Recirculation position.

(3) Remove the instrument panel center bezel.

(4) Remove the center air outlet duct.

(5) Remove and block the supply (Black) vacuum line at the heater-A/C control. The test gauge should return to the calibrated setting of 27 kPa (8 in. Hg). If not, there is a leak in the supply line.

(6) If there is no leak in the supply line, reconnect it to the heater-A/C control and remove the actuator feed (Red) line from the heater-A/C control. Block the vacuum connection on the heater-A/C control from where the line was removed. The test gauge should return to the calibrated setting of 27 kPa (8 in. Hg.). If not, there is a leak in the heater-A/C control.

(7) If there is no leak in the supply line or the heater-A/C control, reconnect the actuator feed (Red) line to the heater-A/C control. Remove and block the actuator feed (Red) line at the actuator. The actuator vacuum port is accessible behind and above the glove box. The test gauge should return to the calibrated setting of 27 kPa (8 in. Hg.). If not there is a leak in the actuator feed line.

DIAGNOSIS AND TESTING (Continued)

(8) If there is no leak in the supply line, the heater-A/C control, or the actuator feed line, the leak must be in the actuator itself. Connect the vacuum hose from the Vacuum Test Gauge directly to the actuator to verify the leak.

LOCATING PINCHED VACUUM LINES

The operation of the recirculation air door can be viewed by removing the blower motor and looking up into the heater-A/C unit housing inlet. Refer to Blower Motor for service procedures.

(1) Connect the test vacuum probe to the heater-A/C vacuum supply (Black) line. Position the vacuum test gauge so it can be viewed from the passenger compartment.

(2) Place the Mode control in the Panel position and the Airflow control in the Recirculation position.

(3) Remove the instrument panel center bezel.

(4) Remove the center air outlet duct.

(5) Remove the vacuum supply (Black) line at the heater-A/C control. The test gauge should drop indicating free flow through the supply line. If not, there is a blockage in the supply line.

(6) If there is no blockage in the supply line, reconnect it to the heater-A/C control. Remove the actuator feed (Red) line from the heater-A/C control. The test gauge should drop indicating free flow through the supply line and heater-A/C control. If not the vacuum switches in the heater-A/C control are not functioning.

(7) If there is no blockage in the supply line or the heater-A/C control, reconnect the actuator feed (Red) line to the heater-A/C control. Remove the actuator feed (Red) line at the actuator. The actuator vacuum port is accessible behind and above the glove box. The test gauge should drop indicating free flow through the supply line, heater-A/C control, and the actuator feed line. If not, there is a blockage in the actuator feed line.

(8) If there is no blockage in the supply line, heater-A/C control, or the actuator feed line, the actuator must have failed. Connect the vacuum hose from the Vacuum Test Gauge directly to the actuator to verify whether the actuator has failed.

BLOWER MOTOR ELECTRICAL DIAGNOSIS

Refer to the Blower Motor Electrical System Diagnosis chart (Fig. 27) in this section. Also refer to Group 8W, Wiring Diagrams for more information.

BLOWER MOTOR VIBRATION AND/OR NOISE DIAGNOSIS

The resistor block supplies the blower motor with varied voltage (low and middle speeds) or battery voltage (high speed).

CAUTION: Stay clear of the blower motor and resistor block (Hot). Do not operate the blower motor with the resistor block removed from the heater-A/C housing.

Refer to the Blower Motor Vibration/Noise chart for diagnosis.

COMPRESSOR NOISE DIAGNOSIS

Excessive noise while the A/C is being used, can be caused by loose mounts, loose clutch, or high operating pressure. Verify compressor drive belt condition, proper refrigerant charge and head pressure before compressor repair is performed.

If the A/C drive belt slips at initial start-up, it does not necessarily mean the compressor has failed.

With the close tolerances of a compressor it is possible to experience a temporary lockup. The longer the A/C system is inactive, the more likely the condition to occur.

This condition is the result of normal refrigerant movement within the A/C system caused by temperature changes. The refrigerant movement may wash the oil out of the compressor.

REFRIGERANT SYSTEM CHARGE LEVEL TEST

NOTE: At the time that this service information was published, the data required for performing this test had not yet been released by engineering. When this data does become available, a Technical Service Bulletin (TSB) will be issued to update this service information.

DIAGNOSIS AND TESTING (Continued)

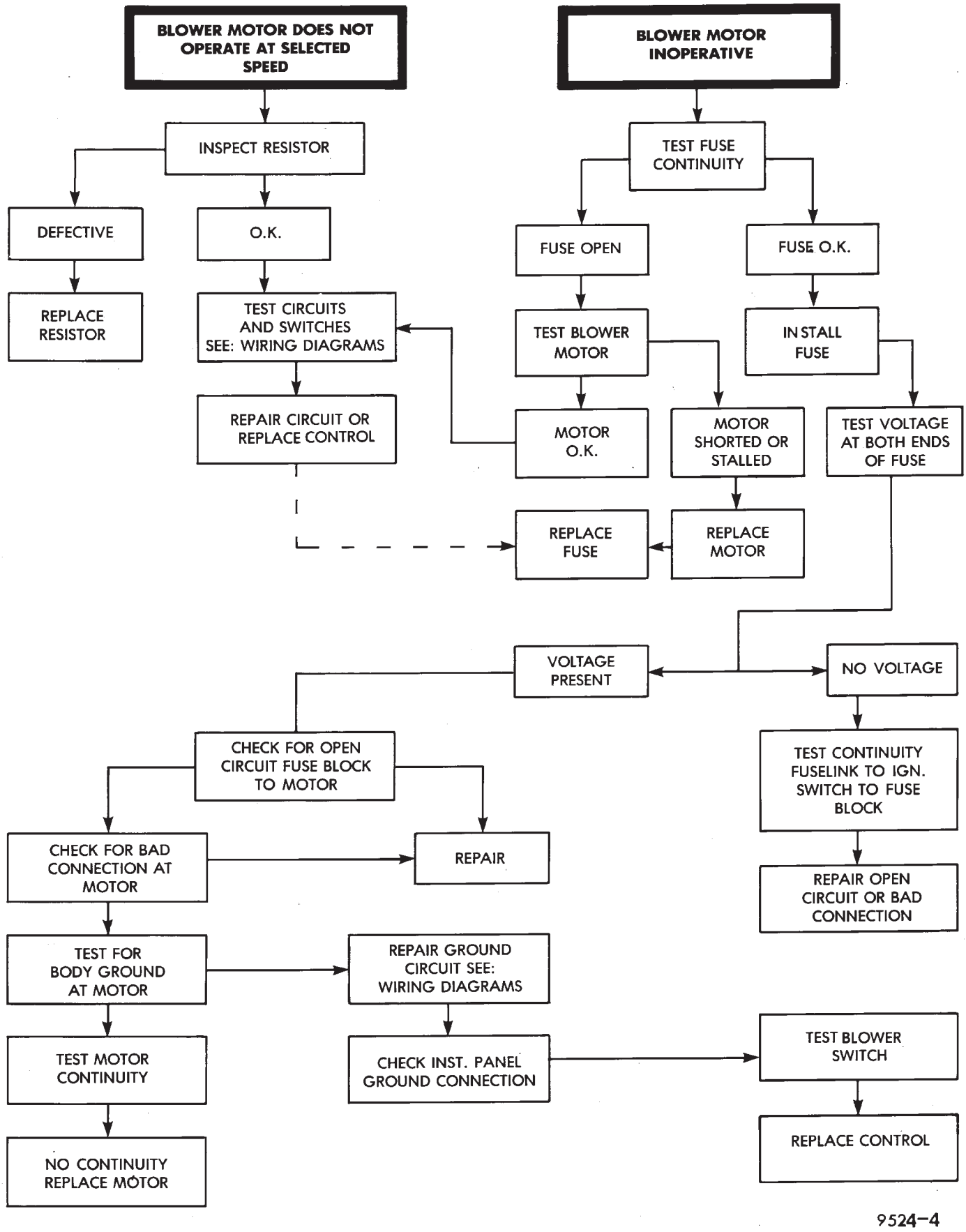

Fig. 27 Blower Motor Electrical Diagnosis

DIAGNOSIS AND TESTING (Continued)

BLOWER MOTOR NOISE/VIBRATION DIAGNOSIS

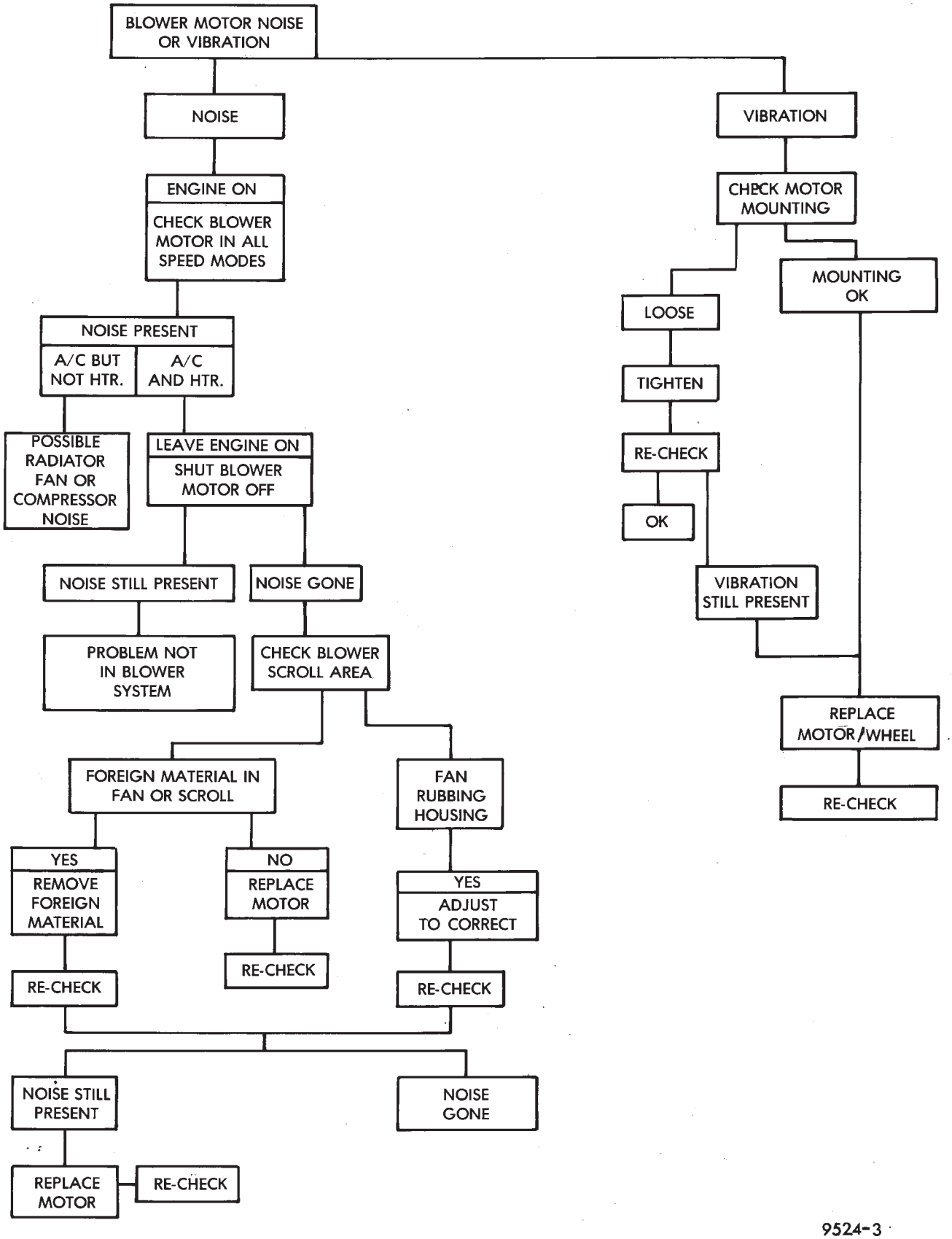

DIAGNOSIS AND TESTING (Continued)

A/C COMPRESSOR CLUTCH RELAY

The A/C compressor clutch relay (Fig. 28) is located in the Power Distribution Center (PDC). See the fuse and relay layout label affixed to the inside surface of the PDC cover for A/C compressor clutch relay identification and location. Remove the relay from the PDC to perform the following tests:

(1) A relay in the de-energized position should have continuity between terminals 87A and 30, and no continuity between terminals 87 and 30. If OK, go to Step 2. If not OK, replace the faulty relay.

(2) Resistance between terminals 85 and 86 (electromagnet) should be 75 ± 5 ohms. If OK, go to Step 3. If not OK, replace the faulty relay.

(3) Connect a battery to terminals 85 and 86. There should now be continuity between terminals 30 and 87, and no continuity between terminals 87A and 30. If OK, see the Relay Circuit Test procedure in this group. If not OK, replace the faulty relay.

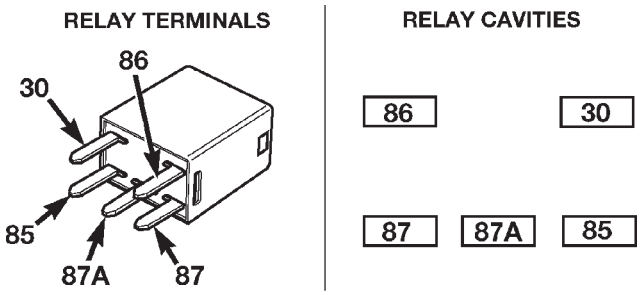

TERMINAL LEGEND	
NUMBER	IDENTIFICATION
30	COMMON FEED
85	COIL GROUND
86	COIL BATTERY
87	NORMALLY OPEN
87A	NORMALLY CLOSED

80c4f4df

Fig. 28 A/C Compressor Clutch Relay

RELAY CIRCUIT TEST

For circuit descriptions and diagrams, refer to 8W-42 - Air Conditioning/Heater in Group 8W - Wiring Diagrams.

(1) The relay common feed terminal cavity (30) is connected to fused battery feed. There should be battery voltage at the cavity for relay terminal 30 at all times. If OK, go to Step 2. If not OK, repair the open fused B(+) circuit to the fuse in the PDC as required.

(2) The relay normally closed terminal (87A) is not used in this application. Go to Step 3.

(3) The relay normally open terminal cavity (87) is connected to the compressor clutch coil. There should be continuity between this cavity and the A/C compressor clutch relay output circuit cavity of the compressor clutch coil wire harness connector. If OK, go to Step 4. If not OK, repair the open A/C compressor clutch relay output circuit as required.

(4) The relay coil battery terminal (86) is connected to the fused ignition switch output (run/start) circuit. There should be battery voltage at the cavity for relay terminal 86 with the ignition switch in the On position. If OK, go to Step 5. If not OK, repair the open fused ignition switch output (run/start) circuit to the fuse in the fuse block as required.

(5) The coil ground terminal cavity (85) is switched to ground through the Powertrain Control Module (PCM). There should be continuity between this cavity and the A/C compressor clutch relay control circuit cavity of the PCM wire harness connector at all times. If not OK, repair the open A/C compressor clutch relay control circuit as required.

HIGH PRESSURE CUT OUT SWITCH

Before performing diagnosis of the high pressure cut out switch, verify that the refrigerant system has the correct refrigerant charge. Refer to **Refrigerant System Charge Test** for the proper procedures.

For circuit descriptions and diagrams, refer to 8W-42 - Air Conditioning/Heater in Group 8W - Wiring Diagrams.

DIAGNOSIS AND TESTING (Continued)

(1) Disconnect and isolate the battery negative cable.

(2) Disconnect the engine wire harness connector from the high pressure cut out switch on the back cover of the compressor.

(3) Check for continuity between the two terminals of the high pressure cut out switch. There should be continuity. If OK, test and repair the A/C switch sense circuit as required. If not OK, replace the faulty switch.

LOW PRESSURE CLUTCH CYCLING SWITCH

Before performing diagnosis of the low pressure clutch cycling switch, be certain that the switch is properly installed on the accumulator fitting. If the switch is too loose it may not open the Schrader-type valve in the accumulator fitting, which will prevent the switch from correctly monitoring the refrigerant system pressure.

Also verify that the refrigerant system has the correct refrigerant charge. Refer to **Refrigerant System Charge Test** for the proper procedures.

For circuit descriptions and diagrams, refer to 8W-42 - Air Conditioning/Heater in Group 8W - Wiring Diagrams.

(1) Disconnect and isolate the battery negative cable.

(2) Disconnect the headlamp and dash wire harness connector from the low pressure clutch cycling switch on the accumulator fitting.

(3) Install a jumper wire between the two cavities of the headlamp and dash wire harness connector for the low pressure clutch cycling switch.

(4) Connect a manifold gauge set to the refrigerant system service ports.

(5) Connect the battery negative cable.

(6) Place the heater-A/C mode control switch knob in any A/C position and start the engine.

(7) Check for continuity between the two terminals of the low pressure clutch cycling switch. There should be continuity with a suction pressure reading of 262 kPa (38 psi) or above, and no continuity with a suction pressure reading of 141 kPa (20.5 psi) or below. If OK, test and repair the A/C switch sense circuit as required. If not OK, replace the faulty switch.

SERVICE PROCEDURES

SERVICE WARNINGS AND PRECAUTIONS

WARNING:

- **THE AIR CONDITIONING SYSTEM CONTAINS REFRIGERANT UNDER HIGH PRESSURE. SEVERE PERSONAL INJURY MAY RESULT FROM IMPROPER SERVICE PROCEDURES. REPAIRS SHOULD ONLY BE PERFORMED BY QUALIFIED SERVICE PERSONNEL.**
- **AVOID BREATHING THE REFRIGERANT AND REFRIGERANT OIL VAPOR OR MIST. EXPOSURE MAY IRRITATE THE EYES, NOSE, AND/OR THROAT. WEAR EYE PROTECTION WHEN SERVICING THE AIR CONDITIONING REFRIGERANT SYSTEM. SERIOUS EYE INJURY CAN RESULT FROM DIRECT CONTACT WITH THE REFRIGERANT. IF EYE CONTACT OCCURS, SEEK MEDICAL ATTENTION IMMEDIATELY.**
- **DO NOT EXPOSE THE REFRIGERANT TO OPEN FLAME. POISONOUS GAS IS CREATED WHEN REFRIGERANT IS BURNED. AN ELECTRONIC LEAK DETECTOR IS RECOMMENDED.**
- **IF ACCIDENTAL SYSTEM DISCHARGE OCCURS, VENTILATE THE WORK AREA BEFORE RESUMING SERVICE. LARGE AMOUNTS OF REFRIGERANT RELEASED IN A CLOSED WORK AREA WILL DISPLACE THE OXYGEN AND CAUSE SUFFOCATION.**
- **THE EVAPORATION RATE OF R-134a REFRIGERANT AT AVERAGE TEMPERATURE AND ALTITUDE IS EXTREMELY HIGH. AS A RESULT, ANYTHING THAT COMES IN CONTACT WITH THE REFRIGERANT WILL FREEZE. ALWAYS PROTECT THE SKIN OR DELICATE OBJECTS FROM DIRECT CONTACT WITH THE REFRIGERANT.**
- **THE R-134a SERVICE EQUIPMENT OR THE VEHICLE REFRIGERANT SYSTEM SHOULD NOT BE PRESSURE TESTED OR LEAK TESTED WITH COMPRESSED AIR. SOME MIXTURES OF AIR AND R-134a HAVE BEEN SHOWN TO BE COMBUSTIBLE AT ELEVATED PRESSURES. THESE MIXTURES ARE POTENTIALLY DANGEROUS, AND MAY RESULT IN FIRE OR EXPLOSION CAUSING INJURY OR PROPERTY DAMAGE.**

SERVICE PROCEDURES (Continued)

CAUTION:

- **Liquid refrigerant is corrosive to metal surfaces. Follow the operating instructions supplied with the service equipment being used.**
- **Never add R-12 to a refrigerant system designed to use R-134a. Damage to the system will result.**
- **R-12 refrigerant oil must not be mixed with R-134a refrigerant oil. They are not compatible.**
- **Do not use R-12 equipment or parts on the R-134a system. Damage to the system will result.**
- **Do not overcharge the refrigerant system. This will cause excessive compressor head pressure and can cause noise and system failure.**
- **Recover the refrigerant before opening any fitting or connection. Open the fittings with caution, even after the system has been discharged. Never open or loosen a connection before recovering the refrigerant.**
- **The refrigerant system must always be evacuated before charging.**
- **Do not open the refrigerant system or uncap a replacement component until you are ready to service the system. This will prevent contamination in the system.**
- **Before disconnecting a component, clean the outside of the fittings thoroughly to prevent contamination from entering the refrigerant system.**
- **Immediately after disconnecting a component from the refrigerant system, seal the open fittings with a cap or plug.**
- **Before connecting an open refrigerant fitting, always install a new seal or gasket. Coat the fitting and seal with clean refrigerant oil before connecting.**
- **Do not remove the sealing caps from a replacement component until it is to be installed.**
- **When installing a refrigerant line, avoid sharp bends that may restrict refrigerant flow. Position the refrigerant lines away from exhaust system components or any sharp edges, which may damage the line.**
- **Tighten refrigerant fittings only to the specified torque. The aluminum fittings used in the refrigerant system will not tolerate overtightening.**
- **When disconnecting a refrigerant fitting, use a wrench on both halves of the fitting. This will prevent twisting of the refrigerant lines or tubes.**
- **Refrigerant oil will absorb moisture from the atmosphere if left uncapped. Do not open a container of refrigerant oil until you are ready to use it. Replace the cap on the oil container immediately after using. Store refrigerant oil only in a clean, airtight, and moisture-free container.**
- **Keep service tools and the work area clean. Contamination of the refrigerant system through careless work habits must be avoided.**

REFRIGERANT SYSTEM SERVICE EQUIPMENT

RECOVERY/RECYCLING STATION

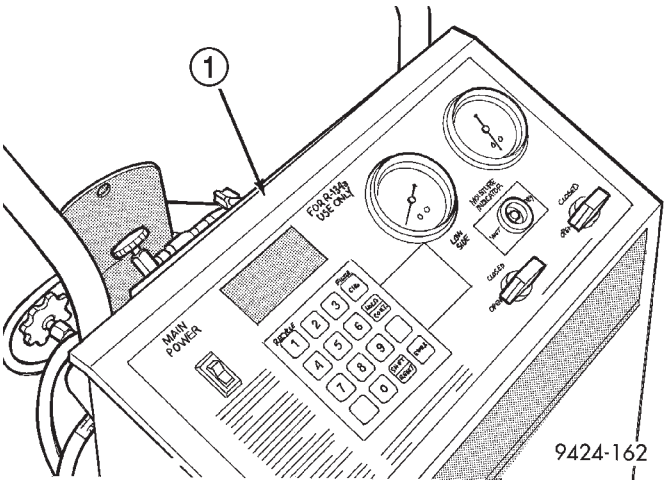

Fig. 29 Refrigerant Recovery/Recycling Station - Typical

1 – R-134 REFRIGERANT RECOVERY MACHINE

When servicing the air conditioning system, a R-134a refrigerant recovery/recycling/charging station that meets SAE Standard J2210 must be used (Fig. 29). Contact an automotive service equipment supplier for refrigerant recovery/recycling/charging equipment. See the operating instructions supplied by the equipment manufacturer for proper care and use of this equipment.

MANIFOLD GAUGE SET CONNECTIONS

CAUTION: Do not use an R-12 manifold gauge set on an R-134a system. The refrigerants are not compatible and system damage will result.

A manifold gauge set may be needed with some recovery/recycling/charging equipment (Fig. 30). The service hoses on the gauge set being used should have manual (turn wheel), or automatic back-flow valves at the service port connector ends. This will prevent refrigerant from being released into the atmosphere.

- **LOW PRESSURE GAUGE HOSE** - The low pressure hose (Blue with Black stripe) attaches to the suction service port. This port is located on the suction line, near the accumulator at the rear of the engine compartment.

SERVICE PROCEDURES (Continued)

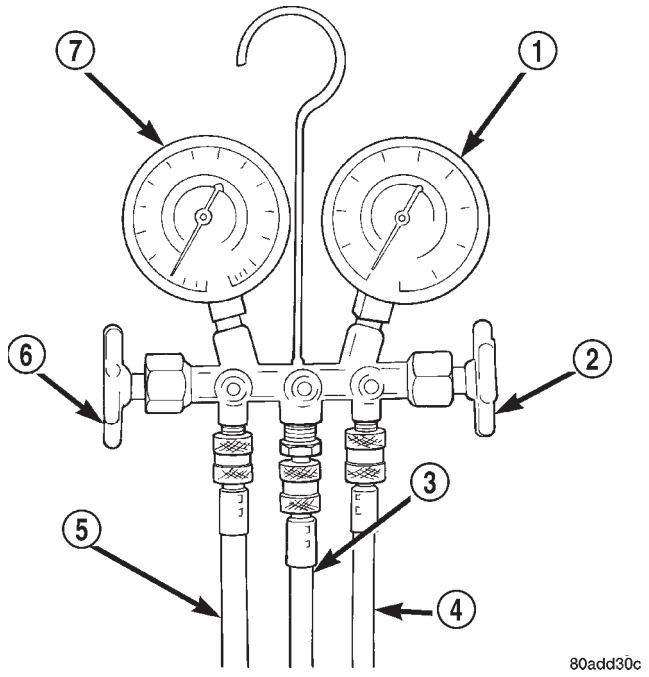

Fig. 30 Manifold Gauge Set - Typical

1 – HIGH PRESSURE GAUGE
2 – VALVE
3 – VACUUM/REFRIGERANT HOSE (YELLOW W/BLACK STRIPE)
4 – HIGH PRESSURE HOSE (RED W/BLACK STRIPE)
5 – LOW PRESSURE HOSE (BLUE W/BLACK STRIPE)
6 – VALVE
7 – LOW PRESSURE GAUGE

- **HIGH PRESSURE GAUGE HOSE** - The high pressure hose (Red with Black stripe) attaches to the discharge service port. This port is located on the liquid line near the evaporator at the rear of the engine compartment.
- **RECOVERY/RECYCLING/EVACUATION/CHARGING HOSE** - The center manifold hose (Yellow, or White, with Black stripe) is used to recover, evacuate, and charge the refrigerant system. When the low or high pressure valves on the manifold gauge set are opened, the refrigerant in the system will escape through this hose.

REFRIGERANT RECOVERY

WARNING: REVIEW THE WARNINGS AND CAUTIONS IN THE FRONT OF THIS GROUP BEFORE PERFORMING THE FOLLOWING OPERATION.

A R-134a refrigerant recovery/recycling/charging station that meets SAE Standard J2210 must be used to recover the refrigerant from an R-134a refrigerant system. See the operating instructions supplied by the equipment manufacturer for the proper care and use of this equipment.

REFRIGERANT SYSTEM LEAKS

WARNING: REVIEW THE WARNINGS AND CAUTIONS IN THE FRONT OF THIS GROUP BEFORE PERFORMING THE FOLLOWING OPERATION.

If the air conditioning system is not cooling properly, determine if the refrigerant system is fully-charged. Refer to **A/C Performance Test** for the proper procedures. If the refrigerant system is low or empty; a leak at a refrigerant line, connector fitting, component, or component seal is likely.

An electronic leak detector designed for R-134a refrigerant is recommended for locating and confirming refrigerant system leaks. See the operating instructions supplied by the equipment manufacturer for proper care and use of this equipment.

An oily residue on or near refrigerant system lines, connector fittings, components, or component seals can indicate the general location of a possible refrigerant leak. However, the exact leak location should be confirmed with an electronic leak detector prior to component repair or replacement.

To detect a leak in the refrigerant system, perform one of the following procedures:

SYSTEM EMPTY

(1) Evacuate the refrigerant system. Refer to **Refrigerant System Evacuate** for the proper procedures.

(2) Connect and dispense 0.283 kilograms (0.625 pounds or 10 ounces) of R-134a refrigerant into the evacuated refrigerant system. Refer to **Refrigerant System Charge** for the proper procedures.

(3) Position the vehicle in a wind-free work area. This will aid in detecting small leaks.

(4) With the engine not running, use a electronic R-134a leak detector and search for leaks. Because R-134a refrigerant is heavier than air, the leak detector probe should be moved slowly along the bottom side of all refrigerant lines, connector fittings and components.

(5) To inspect the evaporator coil for leaks, insert the electronic leak detector probe into the center instrument panel outlet. Set the heater-A/C controls as follows: Blower control in the lowest speed position in the A/C compressor On direction, Airflow control in Recirculation, Mode control in Panel.

SYSTEM LOW

(1) Position the vehicle in a wind-free work area. This will aid in detecting small leaks.

(2) Bring the refrigerant system up to operating temperature and pressure. This is done by allowing the engine to run with the air conditioning system turned on for five minutes.

SERVICE PROCEDURES (Continued)

(3) With the engine not running, use a electronic R-134a leak detector and search for leaks. Because R-134a refrigerant is heavier than air, the leak detector probe should be moved slowly along the bottom side of all refrigerant lines, connector fittings and components.

(4) To inspect the evaporator coil for leaks, insert the electronic leak detector probe into the center instrument panel outlet. Set the heater-A/C controls as follows: Blower control in the lowest speed position in the A/C compressor On direction, Airflow control in Recirculation, Mode control in Panel.

REFRIGERANT SYSTEM EVACUATE

WARNING: REVIEW THE WARNINGS AND CAUTIONS IN THE FRONT OF THIS GROUP BEFORE PERFORMING THE FOLLOWING OPERATION.

If the refrigerant system has been open to the atmosphere, it must be evacuated before the system can be charged. If moisture and air enters the system and becomes mixed with the refrigerant, the compressor head pressure will rise above acceptable operating levels. This will reduce the performance of the air conditioner and damage the compressor. Evacuating the refrigerant system will remove the air and boil the moisture out of the system at near room temperature. To evacuate the refrigerant system, use the following procedure:

(1) Connect a R-134a refrigerant recovery/recycling/charging station that meets SAE Standard J2210 and a manifold gauge set to the refrigerant system of the vehicle.

(2) Open the low and high side valves and start the charging station vacuum pump. When the suction gauge reads 88 kPa (26 in. Hg.) vacuum or greater, close all of the valves and turn off the vacuum pump.

(a) If the refrigerant system fails to reach the specified vacuum, the system has a leak that must be corrected. Refer to **Refrigerant System Leaks** for the proper procedures.

(b) If the refrigerant system maintains the specified vacuum for five minutes, restart the vacuum pump, open the suction and discharge valves and evacuate the system for an additional ten minutes.

(3) Close all of the valves, and turn off the charging station vacuum pump.

(4) The refrigerant system is now ready to be charged with R-134a refrigerant. Refer to **Refrigerant System Charge** for the proper procedures.

REFRIGERANT OIL LEVEL

WARNING: REVIEW THE WARNINGS AND CAUTIONS IN THE FRONT OF THIS GROUP BEFORE PERFORMING THE FOLLOWING OPERATION.

When an air conditioning system is assembled at the factory, all components except the compressor are refrigerant oil free. After the refrigerant system has been charged and operated, the refrigerant oil in the compressor is dispersed throughout the refrigerant system. The accumulator, evaporator, condenser, and compressor will each retain a significant amount of the needed refrigerant oil.

It is important to have the correct amount of oil in the refrigerant system. This ensures proper lubrication of the compressor. Too little oil will result in damage to the compressor. Too much oil will reduce the cooling capacity of the air conditioning system.

It will not be necessary to check the oil level in the compressor or to add oil, unless there has been an oil loss. An oil loss may occur due to a rupture or leak from a refrigerant line, a connector fitting, a component, or a component seal. If a leak occurs, add 30 milliliters (1 fluid ounce) of refrigerant oil to the refrigerant system after the repair has been made. Refrigerant oil loss will be evident at the leak point by the presence of a wet, shiny surface around the leak.

Refrigerant oil must be added when an accumulator, evaporator or condenser is replaced. See the Refrigerant Oil Capacities chart for the proper amount of refrigerant oil to add. When a compressor is replaced, the refrigerant oil must be drained from the old compressor and measured. Drain all of the refrigerant oil from the new compressor, then fill the new compressor with the same amount of fresh new refrigerant oil that was drained out of the old compressor.

REFRIGERANT OIL CAPACITIES		
COMPONENT	ml	fl oz
A/C System	160	5.4
Accumulator	89	3.0
Condenser	30	1.0
Evaporator	59	2.0
All Refrigerant Lines	44	1.5
Compressor	Drain and measure the oil from the old compressor - see text above.	

SERVICE PROCEDURES (Continued)

REFRIGERANT SYSTEM CHARGE

WARNING: REVIEW THE WARNINGS AND CAUTIONS IN THE FRONT OF THIS GROUP BEFORE PERFORMING THE FOLLOWING OPERATION.

After the refrigerant system has been tested for leaks and evacuated, a refrigerant charge can be injected into the system. Refer to **Refrigerant Charge Capacity** for the proper amount of the refrigerant charge.

A R-134a refrigerant recovery/recycling/charging station that meets SAE Standard J2210 must be used to charge the refrigerant system with R-134a refrigerant. See the operating instructions supplied by the equipment manufacturer for proper care and use of this equipment.

REFRIGERANT CHARGE CAPACITY

The R-134a refrigerant system charge capacity for this vehicle is 0.709 kilograms (1.56 pounds/25 ounces).

PARTIAL CHARGE METHOD

WARNING: REVIEW THE WARNINGS AND CAUTIONS IN THE FRONT OF THIS GROUP BEFORE PERFORMING THE FOLLOWING OPERATION.

The partial charge method is used to add a partial charge to a refrigerant system that is low on refrigerant. To perform this procedure the evaporator inlet and outlet tube temperatures are measured. The temperature difference is measured with a temperature meter with one or two clamp-on thermocouple probes. The difference between the evaporator inlet and outlet tube temperatures will determine the amount of refrigerant needed.

Before adding a partial refrigerant charge, check for refrigerant system leaks. Refer to **Refrigerant System Leaks** for the proper procedures. If a leak is found, make the necessary repairs before attempting a full or partial refrigerant charge.

(1) Attach a manifold gauge set to the refrigerant system service ports.

(2) Attach the two clamp-on thermocouple probes to the inlet and outlet tubes of the evaporator coil.

a. If a single thermocouple probe is used, attach the probe to the liquid line just before the connector block for the evaporator. The probe must make contact with the bottom surface of the liquid line.

b. If dual thermocouple probes are used, attach probe 1 to the liquid line, and probe 2 to the suction line. Attach both probes to the lines just before the connector block for the evaporator. The probes must make contact with the bottom surfaces of the liquid line and the suction line.

(3) Open all of the windows or doors of the passenger compartment.

(4) Set the heater-A/C controls as follows: Airflow control in Recirculation, Mode control in Panel, Temperature control to the full Cool position, Blower control in the highest speed position in the A/C compressor On direction.

(5) Start the engine and hold the engine idle speed at 1,000 rpm. Allow the engine to warm up to normal operating temperature.

(6) The compressor clutch may cycle, depending upon ambient temperature, humidity, and the refrigerant system charge level. If the compressor clutch cycles, unplug the wire harness connector from the low pressure clutch cycling switch on the accumulator. Install a jumper wire between the two cavities of the switch wire harness connector.

(7) Hold the engine idle speed at 1,000 rpm.

(8) Allow three to five minutes for the refrigerant system to stabilize, then record the temperatures of the liquid line and the suction line.

a. If a single probe is used, record the temperature of the liquid line. Then remove the probe from the liquid line and attach it to the suction line just before the connector block for the evaporator. The probe must make contact with the bottom surface of the suction line. Allow the thermocouple and meter time to stabilize, then record the temperature of the suction line. Subtract the liquid line temperature reading from the suction line temperature reading.

b. If dual probes are used, record the temperatures of both the liquid line and the suction line. Then subtract the liquid line temperature reading from the suction line temperature reading.

(9) If the measured temperature differential is higher than 22° C to 26° C (40° F to 47° F), add 0.4 kilograms (14 ounces) of refrigerant.

(10) Allow three to five minutes for the refrigerant system to stabilize, then take a second set of thermocouple measurements. Record the temperature difference to determine if an additional charge is required.

(11) Record the compressor discharge pressure. If the reading is higher than the pressure shown in the Compressor Discharge Pressure chart (Fig. 31), the system could be overcharged. If the reading is equal to, or lower, than the pressure shown in the chart, continue with this procedure.

SERVICE PROCEDURES (Continued)

Ambient Temperature	16°C (60°F)	21°C (70°F)	27°C (80°F)	32°C (90°F)	38°C (100°F)	43°C (110°F)
Compressor Discharge Pressure	1515 kPa (220 psi)	1655 kPa (240 psi)	1790 kPa (260 psi)	2070 kPa (300 psi)	2345 kPa (340 psi)	2690 kPa (390 psi)

Fig. 31 Compressor Discharge Pressure

(12) **EXAMPLE:** The ambient temperature is 21° C (70° F). The evaporator inlet tube temperature is 12° C (54° F) and the evaporator outlet tube temperature is 10° C (50° F). Subtract the inlet tube temperature from the outlet tube temperature. The difference is -2° C (-4° F). With a -2° C (-4° F) temperature differential at 21° C (70° F) ambient temperature, the system is fully charged.

(13) Add enough refrigerant to bring the refrigerant system up to a full charge.

(14) Remove the jumper wire from the low pressure clutch cycling switch wire harness connector and reconnect the connector to the switch.

REMOVAL AND INSTALLATION

SERVICE WARNINGS AND PRECAUTIONS

WARNING:

- **THE AIR CONDITIONING SYSTEM CONTAINS REFRIGERANT UNDER HIGH PRESSURE. SEVERE PERSONAL INJURY MAY RESULT FROM IMPROPER SERVICE PROCEDURES. REPAIRS SHOULD ONLY BE PERFORMED BY QUALIFIED SERVICE PERSONNEL.**
- **AVOID BREATHING THE REFRIGERANT AND REFRIGERANT OIL VAPOR OR MIST. EXPOSURE MAY IRRITATE THE EYES, NOSE, AND/OR THROAT. WEAR EYE PROTECTION WHEN SERVICING THE AIR CONDITIONING REFRIGERANT SYSTEM. SERIOUS EYE INJURY CAN RESULT FROM DIRECT CONTACT WITH THE REFRIGERANT. IF EYE CONTACT OCCURS, SEEK MEDICAL ATTENTION IMMEDIATELY.**
- **DO NOT EXPOSE THE REFRIGERANT TO OPEN FLAME. POISONOUS GAS IS CREATED WHEN REFRIGERANT IS BURNED. AN ELECTRONIC LEAK DETECTOR IS RECOMMENDED.**
- **IF ACCIDENTAL SYSTEM DISCHARGE OCCURS, VENTILATE THE WORK AREA BEFORE RESUMING SERVICE. LARGE AMOUNTS OF REFRIGERANT RELEASED IN A CLOSED WORK AREA WILL DISPLACE THE OXYGEN AND CAUSE SUFFOCATION.**
- **THE EVAPORATION RATE OF R-134a REFRIGERANT AT AVERAGE TEMPERATURE AND ALTITUDE IS EXTREMELY HIGH. AS A RESULT, ANYTHING THAT COMES IN CONTACT WITH THE REFRIGERANT WILL FREEZE. ALWAYS PROTECT THE SKIN OR DELICATE OBJECTS FROM DIRECT CONTACT WITH THE REFRIGERANT.**
- **THE R-134a SERVICE EQUIPMENT OR THE VEHICLE REFRIGERANT SYSTEM SHOULD NOT BE PRESSURE TESTED OR LEAK TESTED WITH COMPRESSED AIR. SOME MIXTURES OF AIR AND R-134a HAVE BEEN SHOWN TO BE COMBUSTIBLE AT ELEVATED PRESSURES. THESE MIXTURES ARE POTENTIALLY DANGEROUS, AND MAY RESULT IN FIRE OR EXPLOSION CAUSING INJURY OR PROPERTY DAMAGE.**

REMOVAL AND INSTALLATION (Continued)

CAUTION:

- **Liquid refrigerant is corrosive to metal surfaces. Follow the operating instructions supplied with the service equipment being used.**
- **Never add R-12 to a refrigerant system designed to use R-134a. Damage to the system will result.**
- **R-12 refrigerant oil must not be mixed with R-134a refrigerant oil. They are not compatible.**
- **Do not use R-12 equipment or parts on the R-134a system. Damage to the system will result.**
- **Do not overcharge the refrigerant system. This will cause excessive compressor head pressure and can cause noise and system failure.**
- **Recover the refrigerant before opening any fitting or connection. Open the fittings with caution, even after the system has been discharged. Never open or loosen a connection before recovering the refrigerant.**
- **The refrigerant system must always be evacuated before charging.**
- **Do not open the refrigerant system or uncap a replacement component until you are ready to service the system. This will prevent contamination in the system.**
- **Before disconnecting a component, clean the outside of the fittings thoroughly to prevent contamination from entering the refrigerant system.**
- **Immediately after disconnecting a component from the refrigerant system, seal the open fittings with a cap or plug.**
- **Before connecting an open refrigerant fitting, always install a new seal or gasket. Coat the fitting and seal with clean refrigerant oil before connecting.**
- **Do not remove the sealing caps from a replacement component until it is to be installed.**
- **When installing a refrigerant line, avoid sharp bends that may restrict refrigerant flow. Position the refrigerant lines away from exhaust system components or any sharp edges, which may damage the line.**
- **Tighten refrigerant fittings only to the specified torque. The aluminum fittings used in the refrigerant system will not tolerate overtightening.**
- **When disconnecting a refrigerant fitting, use a wrench on both halves of the fitting. This will prevent twisting of the refrigerant lines or tubes.**
- **Refrigerant oil will absorb moisture from the atmosphere if left uncapped. Do not open a container of refrigerant oil until you are ready to use it. Replace the cap on the oil container immediately after using. Store refrigerant oil only in a clean, airtight, and moisture-free container.**
- **Keep service tools and the work area clean. Contamination of the refrigerant system through careless work habits must be avoided.**

COOLING SYSTEM REQUIREMENTS

To maintain the performance level of the heating-air conditioning system, the engine cooling system must be properly maintained. The use of a bug screen is not recommended. Any obstructions in front of the radiator or condenser will reduce the performance of the air conditioning and engine cooling systems.

The engine cooling system includes the heater core and the heater hoses. Refer to **Cooling System** for more information before the opening of, or attempting any service to the engine cooling system.

REFRIGERANT HOSES/LINES/TUBES PRECAUTIONS

Kinks or sharp bends in the refrigerant plumbing will reduce the capacity of the entire system. High pressures are produced in the system when it is operating. Extreme care must be exercised to make sure that all refrigerant system connections are pressure tight.

A good rule for the flexible hose refrigerant lines is to keep the radius of all bends at least ten times the diameter of the hose. Sharp bends will reduce the flow of refrigerant. The flexible hose lines should be routed so they are at least 80 millimeters (3 inches) from the exhaust manifold. It is a good practice to inspect all flexible refrigerant system hose lines at least once a year to make sure they are in good condition and properly routed.

There are two types of refrigerant fittings:

- All fittings with O-rings need to be coated with refrigerant oil before installation. Use only O-rings that are the correct size and approved for use with R-134a refrigerant. Failure to do so may result in a leak.
- Unified plumbing connections with gaskets cannot be serviced with O-rings. The gaskets are not reusable and new gaskets do not require lubrication before installing.

The refrigerant must be recovered completely from the system before opening any fitting or connection. Open the fittings with caution, even after the refrigerant has been recovered. If any pressure is noticed as a fitting is loosened, tighten the fitting and recover the refrigerant from the system again.

Do not discharge refrigerant into the atmosphere. Use an R-134a refrigerant recovery/recycling device that meets SAE Standard J2210.

The refrigerant system will remain chemically stable as long as pure, moisture-free R-134a refrigerant

REMOVAL AND INSTALLATION (Continued)

and refrigerant oil is used. Dirt, moisture, or air can upset this chemical stability. Operational troubles or serious damage can occur if foreign material is present in the refrigerant system.

When it is necessary to open the refrigerant system, have everything needed to service the system ready. The refrigerant system should not be left open to the atmosphere any longer than necessary. Cap or plug all lines and fittings as soon as they are opened to prevent the entrance of dirt and moisture. All lines and components in parts stock should be capped or sealed until they are to be installed.

All tools, including the refrigerant recycling equipment, the manifold gauge set, and test hoses should be kept clean and dry. All tools and equipment must be designed for R-134a refrigerant.

A/C COMPRESSOR CLUTCH RELAY

REMOVAL

(1) Disconnect and isolate the battery negative cable.

(2) Remove the cover from the Power Distribution Center (PDC) (Fig. 32).

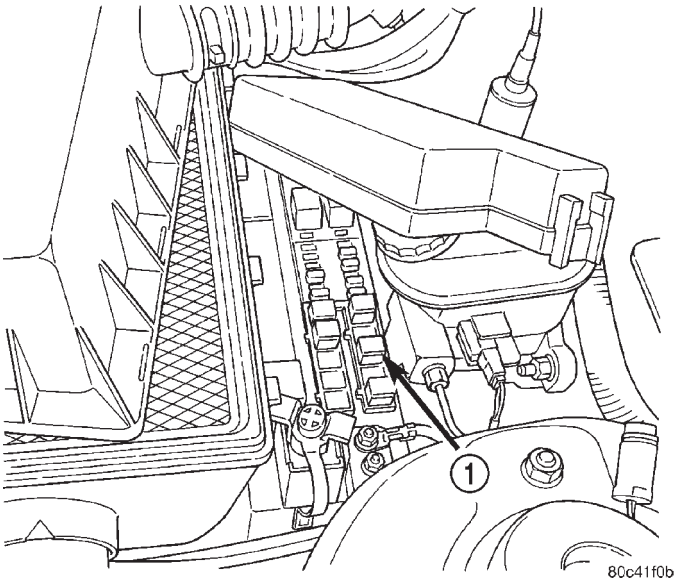

Fig. 32 Power Distribution Center

1 – PDC

(3) See the fuse and relay layout label affixed to the underside of the PDC cover for A/C compressor clutch relay identification and location.

(4) Remove the A/C compressor clutch relay from the PDC.

INSTALLATION

(1) See the fuse and relay layout label affixed to the underside of the PDC cover for the proper A/C compressor clutch relay location.

(2) Position the A/C compressor clutch relay in the proper receptacle in the PDC.

(3) Align the A/C compressor clutch relay terminals with the terminal cavities in the PDC receptacle.

(4) Push down firmly on the A/C compressor clutch relay until the terminals are fully seated in the terminal cavities in the PDC receptacle.

(5) Install the cover onto the PDC.

(6) Reconnect the battery negative cable.

ACCUMULATOR

WARNING: REVIEW THE WARNINGS AND CAUTIONS IN THE FRONT OF THIS GROUP BEFORE PERFORMING THE FOLLOWING OPERATION.

REMOVAL

(1) Recover the refrigerant from the refrigerant system. Refer to **Refrigerant Recovery** in this group for the proper procedures.

(2) Disconnect and isolate the battery negative cable.

(3) If the vehicle is so equipped, relocate the vehicle speed control servo as necessary to access the accumulator. Refer to **Vehicle Speed Control System** for the proper procedures.

(4) Remove the low pressure clutch cycling switch from the accumulator. Refer to **Low Pressure Clutch Cycling Switch** in this group for the proper procedures.

(5) Remove the two screws that secure the two refrigerant line fittings of the suction and liquid line assembly to the accumulator connector block inlet and outlet ports (Fig. 33).

(6) Disconnect the two refrigerant line fittings of the suction and liquid line assembly from the accumulator connector block inlet and outlet ports.

(7) Remove the rubber O-ring seal from the refrigerant line fittings of the suction and liquid line assembly and discard.

(8) Install plugs in, or tape over the opened accumulator connector block inlet and outlet ports and the refrigerant line fittings of the suction and liquid line assembly.

(9) Remove the screw that secures the accumulator mounting bracket to the right side rail.

(10) Remove the accumulator from the engine compartment.

INSTALLATION

(1) Position the accumulator into the engine compartment.

(2) Install and tighten the screw that secures the accumulator mounting bracket to the right side rail. Tighten the screw to 11.3 N·m (100 in. lbs.).

REMOVAL AND INSTALLATION (Continued)

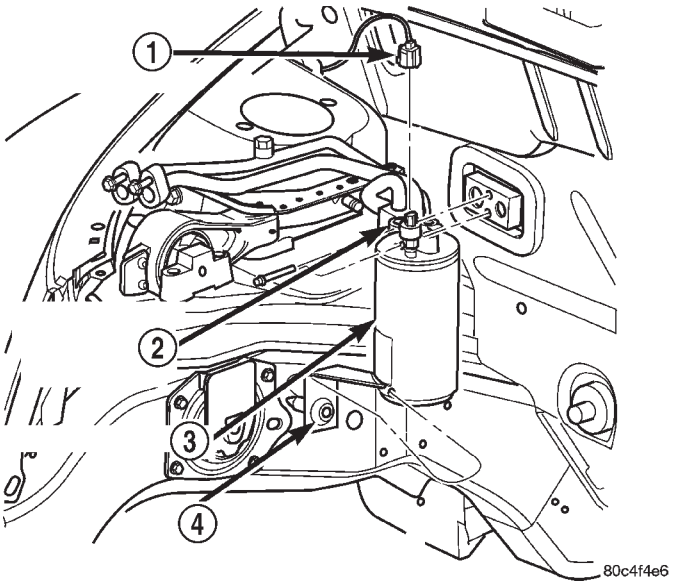

Fig. 33 Accumulator Remove/Install

1 – WIRE HARNESS CONNECTOR
2 – SUCTION AND LIQUID LINE ASSEMBLY
3 – ACCUMULATOR
4 – SCREW

(3) Remove the tape or plugs from the accumulator connector block inlet and outlet ports and the refrigerant line fittings of the suction and liquid line assembly.

(4) Lubricate new rubber O-ring seals with clean refrigerant oil and install them on the refrigerant line fittings of the suction and liquid line assembly. Use only the specified O-rings as they are made of a special material for the R-134a system. Use only refrigerant oil of the type recommended for the compressor in the vehicle.

(5) Reconnect the refrigerant line fittings of the suction and liquid line assembly to the accumulator connector block inlet and outlet ports.

(6) Install and tighten the two screws that secure the two refrigerant line fittings of the suction and liquid line assembly to the accumulator connector block inlet and outlet ports. Tighten the screws to 2.3 N·m (20 in. lbs.).

(7) Reinstall the low pressure clutch cycling switch onto the accumulator. Refer to **Low Pressure Clutch Cycling Switch** in this group for the proper procedures.

(8) If the vehicle is so equipped, reinstall the vehicle speed control servo. Refer to **Vehicle Speed Control System** for the proper procedures.

(9) Reconnect the battery negative cable.

(10) Evacuate the refrigerant system. Refer to **Refrigerant System Evacuate** in this group for the proper procedures.

NOTE: If the accumulator is replaced, add 89 milliliters (3 fluid ounces) of refrigerant oil to the refrigerant system. Use only refrigerant oil of the type recommended for the compressor in the vehicle.

(11) Charge the refrigerant system. Refer to **Refrigerant System Charge** in this group for the proper procedures.

A/C SERVICE PORT VALVE CORES

WARNING: REVIEW THE WARNINGS AND CAUTIONS IN THE FRONT OF THIS GROUP BEFORE PERFORMING THE FOLLOWING OPERATION.

REMOVAL

(1) Remove the protective cap from the A/C service port (Fig. 34).

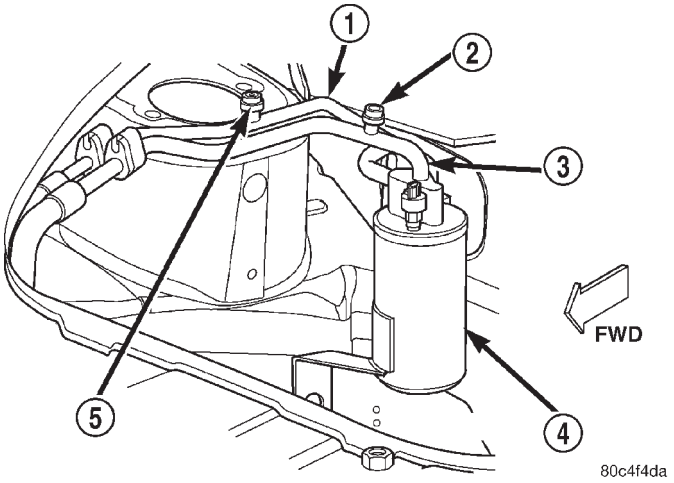

Fig. 34 A/C Service Ports

1 – LIQUID
2 – LOW SIDE SERVICE PORT
3 – SUCTION
4 – ACCUMULATOR
5 – HIGH SIDE SERVICE PORT

(2) Recover the refrigerant from the refrigerant system. Refer to **Refrigerant Recovery** in this group for the proper procedures.

(3) Using a standard Schrader-type valve core tool, remove the valve core from the A/C service port.

(4) Install a plug in or tape over the opened A/C service port.

CAUTION: Be certain to take proper precautions to prevent any dirt or debris from entering the service port while the valve core is removed or from contaminating the replacement valve core.

REMOVAL AND INSTALLATION (Continued)

INSTALLATION

(1) Lubricate the A/C service port valve core with clean refrigerant oil prior to installation. Use only refrigerant oil of the type recommended for the compressor in the vehicle.

(2) Remove the tape or plug from the A/C service port.

(3) Using a standard Schrader-type valve core tool, install and tighten the replacement valve core into the A/C service port.

CAUTION: A valve core that is not fully seated in the A/C service port can result in damage to the valve during refrigerant system evacuation and charge. Such damage may result in a loss of system refrigerant while uncoupling the charge adapters.

(4) Evacuate the refrigerant system. Refer to **Refrigerant System Evacuate** in this group for the proper procedures.

(5) Charge the refrigerant system. Refer to **Refrigerant System Charge** in this group for the proper procedures.

(6) Reinstall the protective cap onto the A/C service port.

BLOWER MOTOR

The blower motor is located on the bottom right side of the unit housing. The blower motor can be removed without having to remove the heater-A/C unit housing from the vehicle. The blower wheel is only serviced with the blower motor. The wheel and the motor are balanced as a unit. If the blower wheel requires replacement, the blower motor must also be replaced.

REMOVAL

HEATER ONLY

(1) Disconnect and isolate the battery negative cable.

(2) Remove the two push-pin fasteners that secure the right silencer pad to the lower edge of the instrument panel.

(3) Pull the right silencer pad rearward to remove it from under the instrument panel.

(4) Disconnect the instrument panel wire harness connector from the blower motor pigtail wiring connector (Fig. 35).

(5) Pull down on the blower motor locking tab located on the edge of the blower motor mounting flange nearest the dash panel.

(6) While holding the locking tab down, grasp the blower motor firmly and rotate it approximately 1/8 turn counterclockwise.

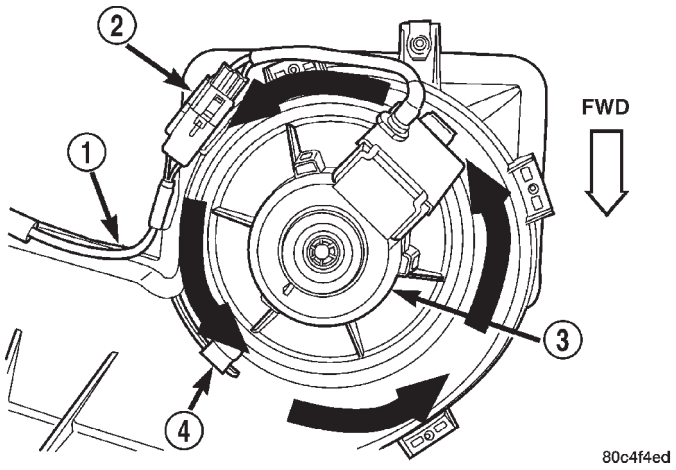

Fig. 35 Blower Motor Removal - Heater Only

1 – HEATER-A/C UNIT HOUSING
2 – WIRING CONNECTOR
3 – BLOWER MOTOR
4 – LOCKING TAB

(7) Lower the blower motor and wheel straight down from the heater unit housing.

HEATER-A/C

(1) Disconnect and isolate the battery negative cable.

(2) Remove the two push-pin fasteners that secure the right silencer pad to the lower edge of the instrument panel.

(3) Pull the right silencer pad rearward to remove it from under the instrument panel.

(4) Disconnect the instrument panel wire harness connector from the blower motor pigtail wiring connector.

(5) Remove the four screws that secure the blower motor to the heater-A/C unit housing (Fig. 36).

(6) Lower the blower motor and wheel straight down from the heater unit housing.

INSTALLATION

HEATER ONLY

(1) Position the blower motor and wheel in the heater unit housing.

(2) Grasp the blower motor firmly and rotate it approximately 1/8 turn clockwise, until the locking tab snaps into place with an audible click.

(3) Reconnect the instrument panel wire harness connector to the blower motor pigtail wiring connector.

(4) Insert the tabs on the forward edge of the instrument panel right silencer pad into the slots in the dash panel silencer pad under the instrument panel.

REMOVAL AND INSTALLATION (Continued)

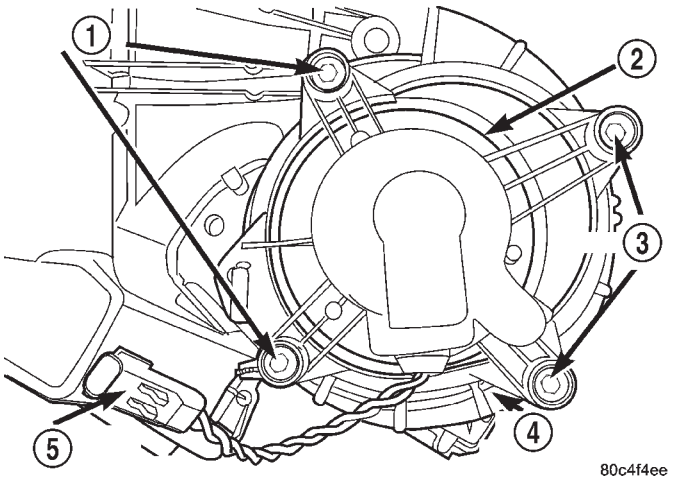

Fig. 36 Blower Motor Removal - Heater-A/C

1 – SCREWS
2 – BLOWER MOTOR
3 – SCREWS
4 – HEATER-A/C UNIT HOUSING
5 – WIRING CONNECTOR

(5) Install the two push-pin fasteners that secure the right silencer pad to the lower edge of the instrument panel.

(6) Reconnect the battery negative cable.

HEATER-A/C

(1) Position the blower motor and wheel in the heater unit housing.

(2) Install and tighten the four screws that secure the blower motor to the heater-A/C unit housing. Tighten the screws to 2.2 N·m (20 in. lbs.).

(3) Reconnect the instrument panel wire harness connector to the blower motor pigtail wiring connector.

(4) Insert the tabs on the forward edge of the instrument panel right silencer pad into the slots in the dash panel silencer pad under the instrument panel.

(5) Install the two push-pin fasteners that secure the right silencer pad to the lower edge of the instrument panel.

(6) Reconnect the battery negative cable.

BLOWER MOTOR RESISTOR

WARNING: IF THE BLOWER MOTOR WAS TURNED ON, WAIT FIVE MINUTES TO ALLOW THE BLOWER MOTOR RESISTOR TO COOL. IF THE RESISTOR WIRES ARE NOT ALLOWED TO COOL, THEY CAN BURN YOUR FINGERS.

CAUTION: Do not operate the blower motor with the blower motor resistor removed.

REMOVAL

(1) Disconnect and isolate the battery negative cable.

(2) Remove the windshield wiper arms from the wiper pivots near the base of the windshield. Refer to **Windshield Wiper and Washers** for the proper procedures.

(3) Remove the cowl cover from the top of the cowl plenum near the base of the windshield. Refer to **Body** for the proper procedures.

(4) Reach into the right side of the cowl plenum area to access and disconnect the headlamp and dash wire harness connector from the blower motor resistor connector receptacle (Fig. 37).

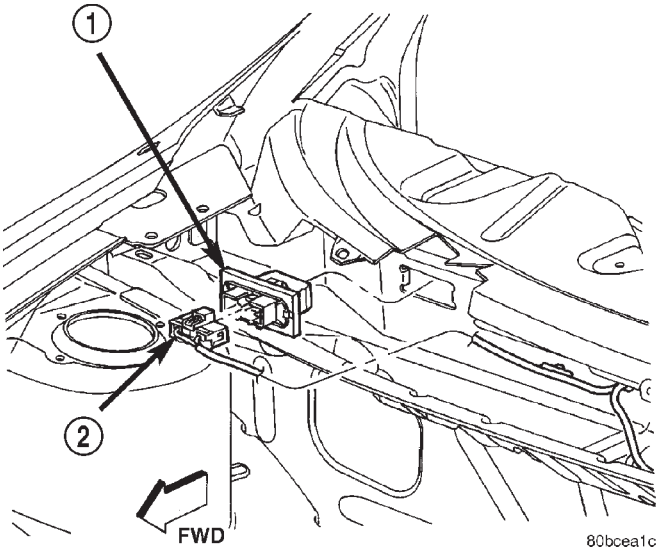

Fig. 37 Blower Motor Resistor Remove/Install

1 – RESISTOR BLOCK
2 – ELECTRICAL CONNECTOR

(5) Disengage the blower motor resistor from the mounting hole in the dash panel. The resistor is retained by a snap fit.

(6) Remove the blower motor resistor from the cowl plenum area.

INSTALLATION

(1) Position the blower motor resistor into the right side of the cowl plenum area.

(2) Insert the blower motor resistor into the mounting hole in the dash panel.

(3) Press firmly and evenly on the blower motor resistor connector receptacle until the resistor snaps into place.

(4) Reconnect the headlamp and dash wire harness connector to the blower motor resistor connector receptacle.

(5) Reinstall the cowl cover onto the top of the cowl plenum near the base of the windshield. Refer to **Body** for the proper procedures.

REMOVAL AND INSTALLATION (Continued)

(6) Reinstall the windshield wiper arms onto the wiper pivots near the base of the windshield. Refer to **Windshield Wiper and Washers** for the proper procedures.

(7) Reconnect the battery negative cable.

COMPRESSOR

The compressor may be removed from the mounting bracket and repositioned without disconnecting the refrigerant lines or discharging the refrigerant system. Discharging is not necessary if servicing the compressor clutch or clutch coil, the engine, the cylinder head or the generator.

WARNING: REVIEW THE WARNINGS AND CAUTIONS IN THE FRONT OF THIS GROUP BEFORE PERFORMING THE FOLLOWING OPERATION.

REMOVAL

(1) Recover the refrigerant from the refrigerant system. Refer to **Refrigerant Recovery** in this group for the proper procedures.

(2) Disconnect and isolate the battery negative cable.

(3) Raise and support the vehicle.

(4) Remove the serpentine drive belt. Refer to **Cooling System** for the proper procedures.

(5) Disconnect the engine wire harness connectors from the compressor clutch coil connector and the high pressure cut out switch (Fig. 38).

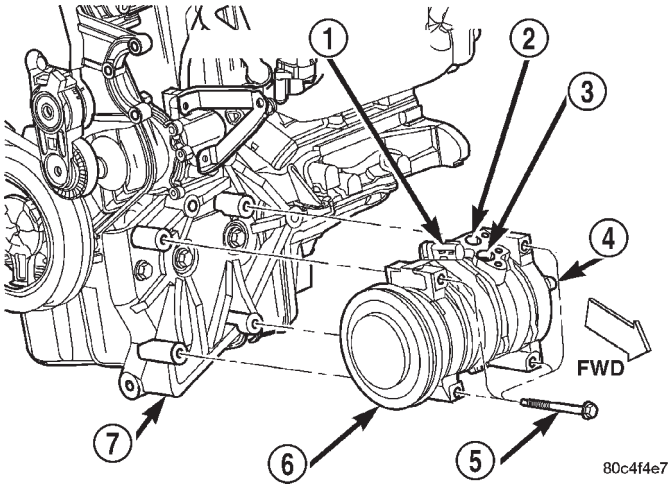

Fig. 38 A/C Compressor Remove/Install

1 – CLUTCH COIL CONNECTOR
2 – DISCHARGE PORT
3 – SUCTION PORT
4 – HIGH PRESSURE CUT-OUT SWITCH
5 – SCREW
6 – COMPRESSOR
7 – BRACKET

(6) Remove the screw that secures the suction line fitting to the compressor suction port (Fig. 39).

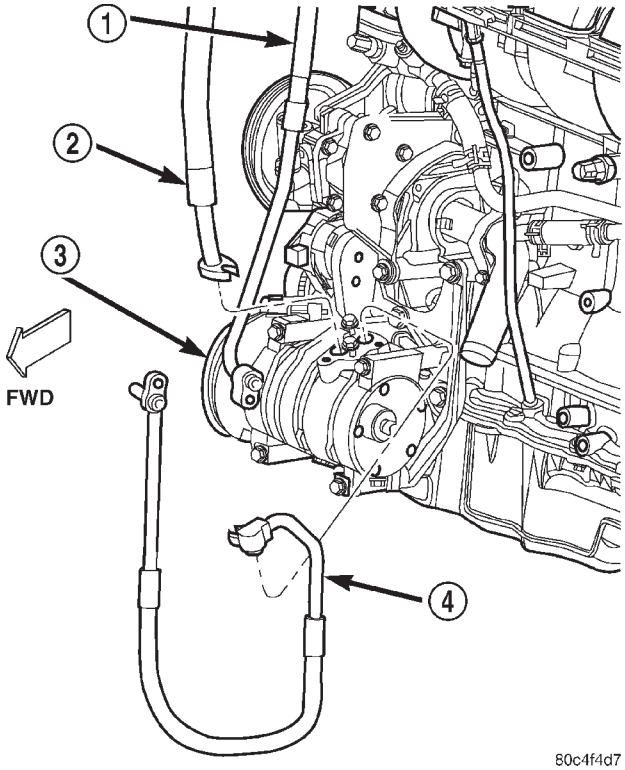

Fig. 39 A/C Refrigerant Lines - Compressor

1 – LIQUID LINE
2 – SUCTION LINE
3 – COMPRESSOR
4 – DISCHARGE LINE

(7) Disconnect the suction line fitting from the compressor suction port.

(8) Remove the rubber O-ring seal from the refrigerant line fitting of the suction line and discard.

(9) Install plugs in, or tape over the opened compressor suction port and the refrigerant line fitting of the suction line.

(10) Remove the screw that secures the discharge line fitting to the compressor discharge port.

(11) Disconnect the discharge line fitting from the compressor discharge port.

(12) Remove the rubber O-ring seal from the refrigerant line fitting of the discharge line and discard.

(13) Install plugs in, or tape over the opened compressor discharge port and the refrigerant line fitting of the discharge line.

(14) Remove the four screws that secure the compressor to the lower front strut-to-engine bracket.

(15) Remove the compressor from the engine compartment.

REMOVAL AND INSTALLATION (Continued)

INSTALLATION

NOTE: If a replacement compressor is being installed, be certain to check the refrigerant oil level. See Refrigerant Oil Level in this group for the procedures. Use only refrigerant oil of the type recommended for the compressor in the vehicle.

(1) Position the compressor into the engine compartment.

(2) Install and tighten the four screws that secure the compressor to the lower front strut-to-engine bracket. Tighten the screws to 28.3 N·m (250 in. lbs.).

(3) Remove the tape or plugs from the compressor discharge port and the refrigerant line fitting of the discharge line.

(4) Lubricate a new rubber O-ring seal with clean refrigerant oil and install it on the refrigerant line fitting of the discharge line. Use only the specified O-rings as they are made of a special material for the R-134a system. Use only refrigerant oil of the type recommended for the compressor in the vehicle.

(5) Reconnect the discharge line fitting to the compressor discharge port.

(6) Install and tighten the screw that secures the discharge line fitting to the compressor discharge port. Tighten the screw to 12.2 N·m (108 in. lbs.).

(7) Remove the tape or plugs from the compressor suction port and the refrigerant line fitting of the suction line.

(8) Lubricate a new rubber O-ring seal with clean refrigerant oil and install it on the refrigerant line fitting of the suction line. Use only the specified O-rings as they are made of a special material for the R-134a system. Use only refrigerant oil of the type recommended for the compressor in the vehicle.

(9) Reconnect the suction line fitting to the compressor suction port.

(10) Install and tighten the screw that secures the suction line fitting to the compressor suction port. Tighten the screw to 12.2 N·m (108 in. lbs.).

(11) Reconnect the engine wire harness connectors to the compressor clutch coil connector and the high pressure cut out switch.

(12) Reinstall the serpentine drive belt. Refer to **Cooling System** for the proper procedures.

(13) Lower the vehicle.

(14) Reconnect the battery negative cable.

(15) Evacuate the refrigerant system. Refer to **Refrigerant System Evacuate** in this group for the proper procedures.

(16) Charge the refrigerant system. Refer to **Refrigerant System Charge** in this group for the proper procedures.

COMPRESSOR CLUTCH

The refrigerant system can remain fully charged during compressor clutch, pulley or coil replacement. Although the compressor assembly must be removed from the mounting bracket, the compressor clutch can be service with the compressor in the vehicle.

REMOVAL

(1) Disconnect and isolate the battery negative cable.

(2) Raise and support the vehicle.

(3) Remove the serpentine drive belt. Refer to **Cooling System** for the proper procedures.

(4) Disconnect the engine wire harness connectors from the compressor clutch coil connector and the high pressure cut out switch (Fig. 40).

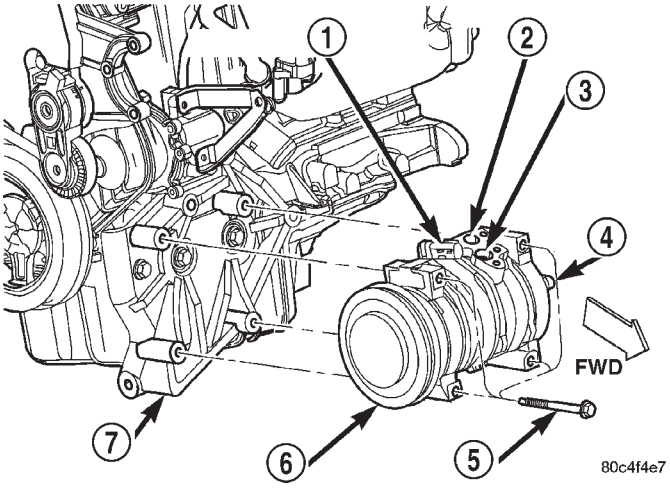

Fig. 40 A/C Compressor Remove/Install

1 – CLUTCH COIL CONNECTOR
2 – DISCHARGE PORT
3 – SUCTION PORT
4 – HIGH PRESSURE CUT-OUT SWITCH
5 – SCREW
6 – COMPRESSOR
7 – BRACKET

(5) Loosen the four screws that secure the compressor to the lower front strut-to-engine bracket.

(6) Remove all of the compressor mounting screws except the upper left (rear of the compressor) screw and tilt the front (pulley end) of the compressor downward far enough to access the clutch for removal. The upper left screw remains loosely installed to support the compressor during clutch service.

(7) Remove the compressor shaft bolt (Fig. 41). A band-type oil filter wrench or a strap wrench can be placed around the clutch plate to aid in bolt removal.

(8) Tap the clutch plate lightly with a plastic hammer and remove clutch plate and shim(s) (Fig. 42). **Be certain not to lose the shim or shims.**

REMOVAL AND INSTALLATION (Continued)

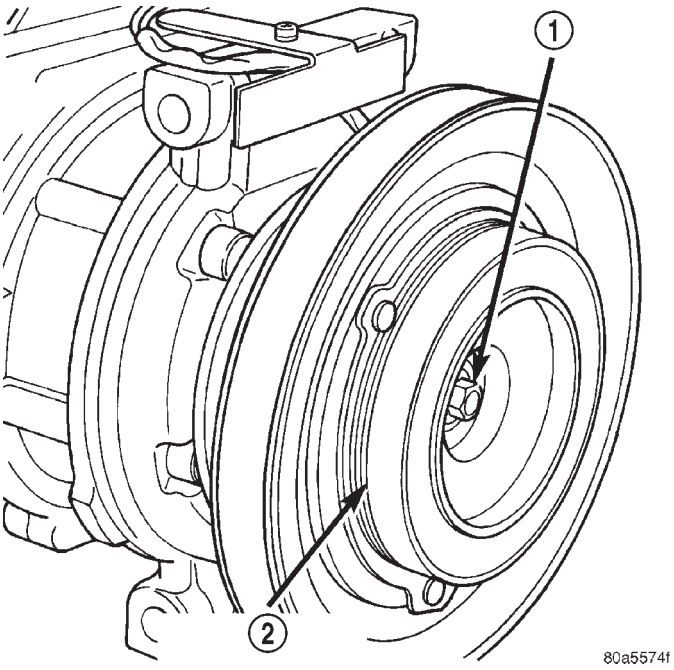

Fig. 41 Compressor Shaft Bolt and Clutch Plate

1 – COMPRESSOR SHAFT BOLT
2 – COMPRESSOR CLUTCH PLATE

CAUTION: Do not pry between the clutch plate unit and the pulley to remove the clutch plate from the compressor shaft as this may damage the clutch plate.

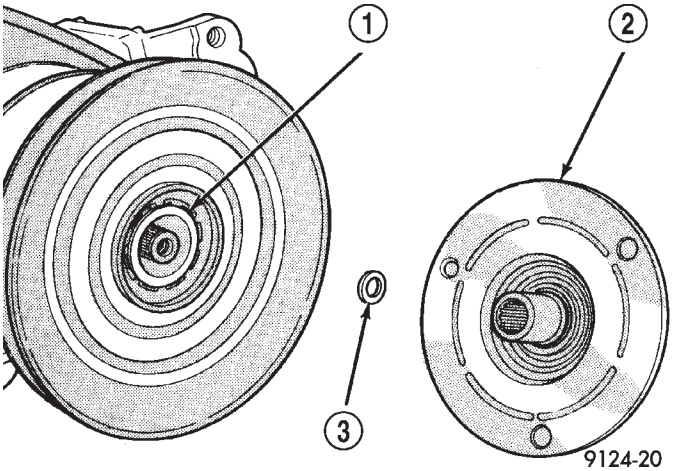

Fig. 42 Clutch Plate and Shim(s)

1 – COMPRESSOR SHAFT
2 – CLUTCH PLATE
3 – CLUTCH PLATE SHIM

(9) Remove the external snap ring securing the pulley to the front cover of the compressor with snap ring pliers, and slide the pulley off of compressor (Fig. 43).

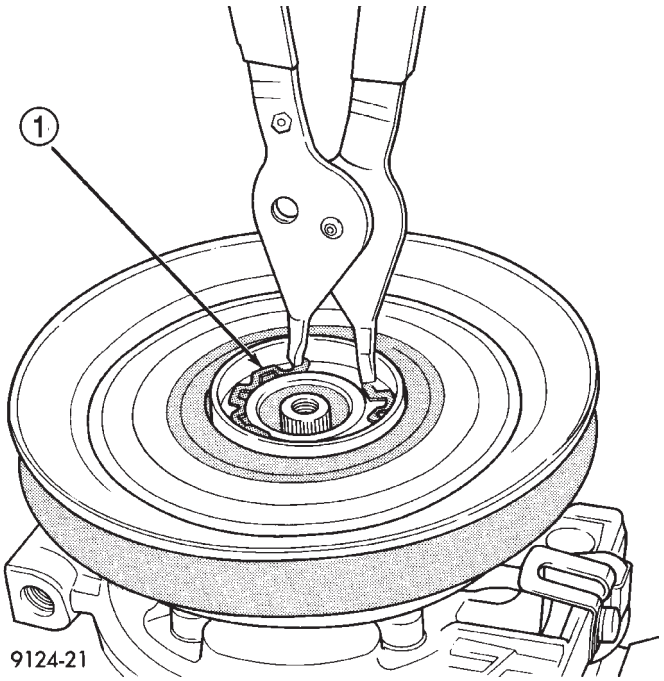

Fig. 43 Remove Clutch Pulley Snap Ring

1 – SNAP RING

(10) Remove the screw that secures the clutch coil pigtail wire connector bracket and ground clip to the top of the compressor housing.

(11) Remove the external snap ring securing the clutch coil to the front cover of the compressor with snap ring pliers, and slide the clutch coil off of the compressor (Fig. 44).

INSPECTION

(1) Examine the friction surfaces of the clutch pulley and the clutch plate for wear. The pulley and clutch plate should be replaced if there is excessive wear or scoring.

(2) Examine the friction surfaces of the clutch pulley and the clutch plate for oil contamination. If the friction surfaces are oily, inspect the shaft and nose area of the compressor for oil. Remove the felt packing from around the compressor shaft in the compressor front cover. If the felt is saturated with oil, the shaft seal is leaking and the compressor will have to be replaced.

(3) Check the clutch pulley bearing for roughness or excessive leakage of grease. Replace the bearing, if required.

INSTALLATION

(1) Align the dowel pin on the back of the clutch coil with the hole in the compressor front cover, and position the clutch coil onto the compressor. Be certain that the clutch coil pigtail wires are properly oriented and routed so that they are not pinched

REMOVAL AND INSTALLATION (Continued)

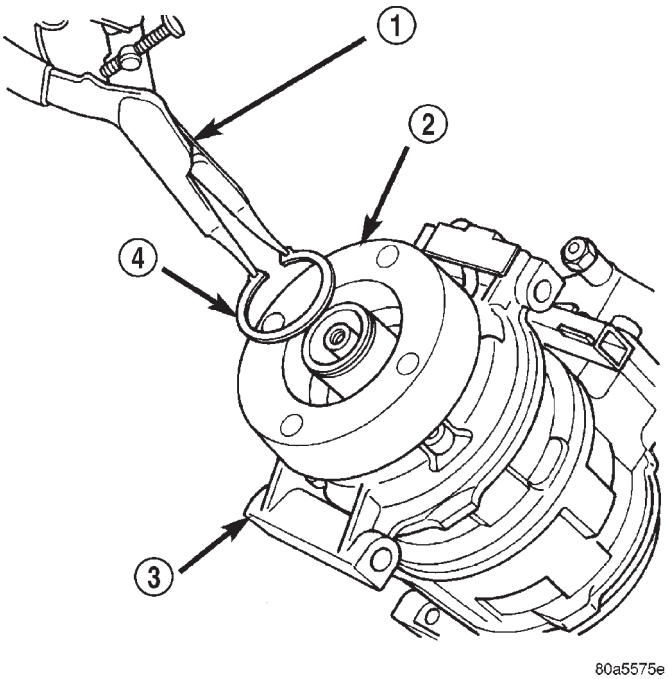

Fig. 44 Remove Clutch Coil Snap Ring

1 – SNAP RING PLIERS
2 – CLUTCH COIL
3 – COMPRESSOR
4 – SNAP RING

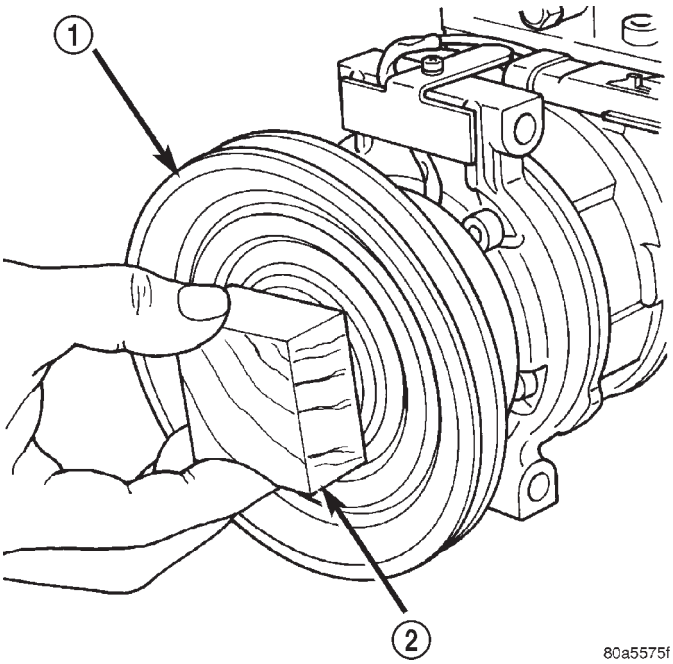

Fig. 45 Install Clutch Pulley

1 – PULLEY ASSEMBLY
2 – WOOD BLOCK

between the compressor front cover and the clutch coil.

NOTE: A new snap ring must be used to secure the clutch coil to the compressor. The bevel side of the snap ring must face outward.

(2) Install the external snap ring securing the clutch coil to the front cover of the compressor with snap ring pliers. Be certain that the snap ring is fully and properly seated in the groove.

CAUTION: If the snap ring is not fully seated in the groove it will vibrate out, resulting in a clutch failure and severe damage to the compressor front cover.

(3) Install and tighten the screw that secures the clutch coil pigtail wire connector bracket and ground clip to the top of the compressor housing.

(4) Install the pulley onto the front cover of the compressor. If necessary, tap the pulley gently with a block of wood placed on the pulley friction surface (Fig. 45).

CAUTION: Do not mar the friction surfaces of the pulley.

(5) Install the external snap ring (bevel side facing outward) securing the clutch pulley to the front cover of the compressor with snap ring pliers. Be certain that the snap ring is fully and properly seated in the groove.

(6) If the original clutch plate and clutch pulley are to be reused, reinstall the original shim(s) on the compressor shaft against the shoulder. If a new clutch plate and/or clutch pulley are being used, install a trial stack of shims 2.54 mm (0.10 in.) thick on the compressor shaft against the shoulder.

(7) Install the clutch plate onto the compressor shaft.

(8) Install and tighten the compressor shaft bolt. A band-type oil filter wrench or a strap wrench can be placed around the clutch plate to aid in bolt tightening. Tighten the bolt to 17.5 N·m (155 in. lbs.).

(9) If a new clutch plate and/or clutch pulley are being used, the air gap between the clutch plate and clutch pulley must be checked using the following procedure:

(a) Attach a dial indicator to the compressor front cover so that the movement of the clutch plate can be measured.

(b) With the dial indicator zeroed on the clutch plate, energize the clutch and record the measurement of the clutch plate movement.

(c) The correct reading is 0.35 to 0.65 mm (0.014 to 0.026 in.). If the correct reading is not obtained, add or subtract shims until the desired reading is obtained.

REMOVAL AND INSTALLATION (Continued)

NOTE: The shims may compress after tightening the compressor shaft bolt. Check the air gap in four or more places on the clutch plate to verify that the air gap is still correct. Spin the clutch pulley before making the final air gap check.

(10) Install and tighten the four screws that secure the compressor to the lower front strut-to-engine bracket. Tighten the screws to 28.3 N·m (250 in. lbs.).

(11) Reconnect the engine wire harness connectors to the compressor clutch coil connector and the high pressure cut out switch.

(12) Reinstall the serpentine drive belt. Refer to **Cooling System** for the proper procedures.

(13) Lower the vehicle.

(14) Reconnect the battery negative cable.

CLUTCH BREAK-IN

After a new compressor clutch has been installed, cycle the compressor clutch about twenty times (five seconds on, then five seconds off). During this procedure, set the heater-A/C control to the A/C mode, the blower switch in the highest speed position and hold the engine speed at 1500 to 2000 rpm. This procedure (burnishing) will seat the opposing friction surfaces and provide a higher compressor clutch torque capability.

CONDENSATE DRAIN TUBE

REMOVAL

(1) Raise and support the vehicle.

(2) Locate the rubber condensate drain tube on the right side of the dash panel (Fig. 46).

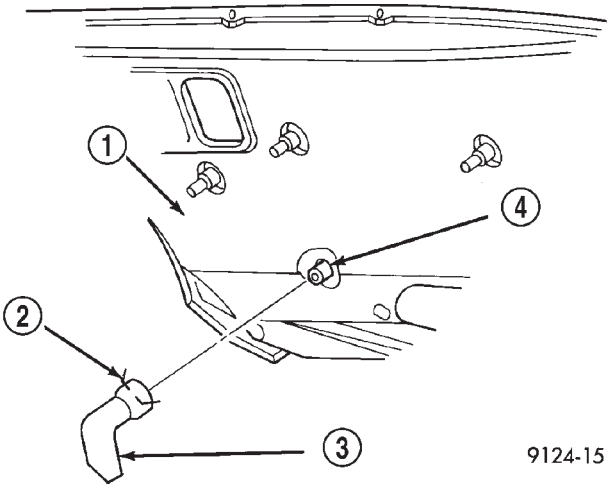

Fig. 46 Condensate Drain Tube - Typical

1 – DASH PANEL (UNDER HOOD RIGHT SIDE)
2 – CLAMP
3 – CONDENSATE DRAIN TUBE
4 – NIPPLE-A/C HEATER HOUSING

(3) Squeeze the wire clamp that secures the condensate drain tube to the heater-A/C unit housing drain nipple with pliers and remove the drain tube from the nipple.

INSPECTION

(1) Examine the condensate drain tube for foreign material or obstructions and clean or clear obstructions as necessary.

(2) Examine the heater-A/C unit housing drain nipple for foreign material or obstructions and clean or clear obstructions as necessary.

INSTALLATION

(1) Squeeze the wire clamp that secures the condensate drain tube to the heater-A/C unit housing drain nipple with pliers and install the drain tube onto the nipple. Be certain that the open end of the condensate drain tube is oriented towards the ground.

(2) Lower the vehicle.

CONDENSER

The condenser is located in front of the engine radiator and is integral to the cooling module. The condenser cannot be repaired and, if faulty or damaged, it must be replaced. An air seal on each side of the cooling module is secured to the condenser using plastic mounting rod with locking button fasteners, which cannot be reused. Six replacement fasteners are supplied with new condensers for reinstalling the air seals.

WARNING: REVIEW THE WARNINGS AND CAUTIONS IN THE FRONT OF THIS GROUP BEFORE PERFORMING THE FOLLOWING OPERATION.

REMOVAL

(1) Recover the refrigerant from the refrigerant system. Refer to **Refrigerant Recovery** in this group for the proper procedures.

(2) Disconnect and isolate the battery negative cable.

(3) Remove the nut that secures the discharge line fitting to the inlet fitting (upper fitting) of the condenser (Fig. 47).

(4) Disconnect the discharge line fitting from the condenser inlet fitting.

(5) Remove the rubber O-ring seal from the refrigerant line fitting of the discharge line and discard.

(6) Install plugs in, or tape over the opened condenser inlet fitting and the refrigerant line fitting of the discharge line.

(7) Remove the nut that secures the liquid line fitting to the outlet fitting of the condenser.

REMOVAL AND INSTALLATION (Continued)

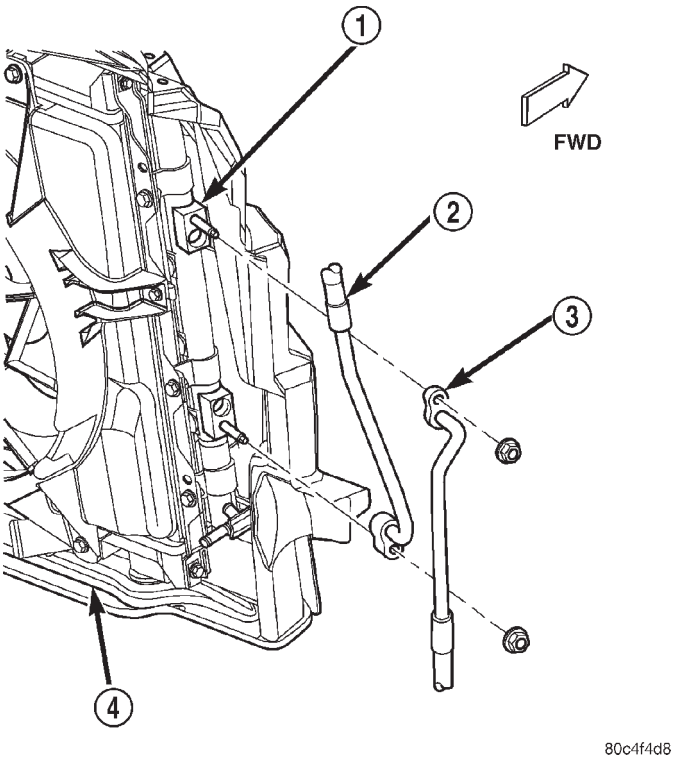

Fig. 47 A/C Refrigerant Lines - Condenser

1 – CONDENSER
2 – LIQUID LINE
3 – DISCHARGE LINE
4 – COOLING MODULE

(8) Disconnect the liquid line fitting from the condenser outlet fitting.

(9) Remove the rubber O-ring seal from the refrigerant line fitting of the liquid line and discard.

(10) Install plugs in, or tape over the opened condenser outlet fitting and the refrigerant line fitting of the liquid line.

(11) Remove the cooling module from the vehicle. Refer to **Radiator** in Group 7 - Cooling System for the proper procedures.

(12) From the front of the cooling module, disengage the tabs of the lower air seal from the slot at the bottom of each side air seal (Fig. 48).

(13) From the back of the cooling module, remove the four screws (two on each side) that secure the condenser to the radiator supports (Fig. 49).

(14) Remove the condenser from the cooling module.

(15) Using a pair of side cutters, carefully cut the locking buttons off of the six (three on each side) mounting rods that secure an air seal to each side of the condenser.

(16) Remove the side air seals from the condenser.

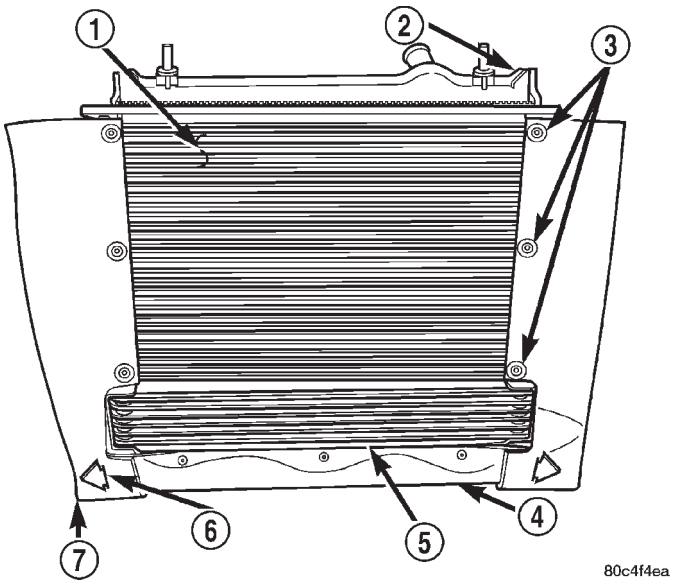

Fig. 48 Condenser Air Seals

1 – CONDENSER
2 – RADIATOR
3 – LOCKING BUTTONS
4 – LOWER AIR SEAL
5 – TRANSMISSION COOLER
6 – TAB AND SLOT
7 – SIDE AIR SEAL

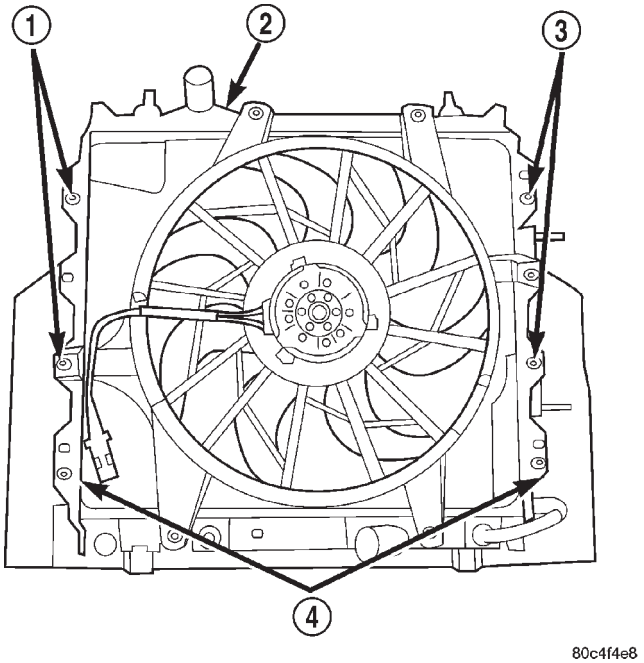

Fig. 49 Condenser Remove/Install

1 – SCREWS
2 – COOLING MODULE
3 – SCREWS
4 – RADIATOR SUPPORTS

REMOVAL AND INSTALLATION (Continued)

INSTALLATION

(1) Position the side air seals onto the condenser.

(2) Insert a new mounting rod with a foam pad through the condenser fins from the rear of the condenser and through the mounting hole in the side air shield (Fig. 50). Then secure the air seal to the mounting rod by snapping a locking button over the end of the mounting rod from the front of the condenser. Repeat this procedure until each air seal is secured by three mounting rods with locking buttons.

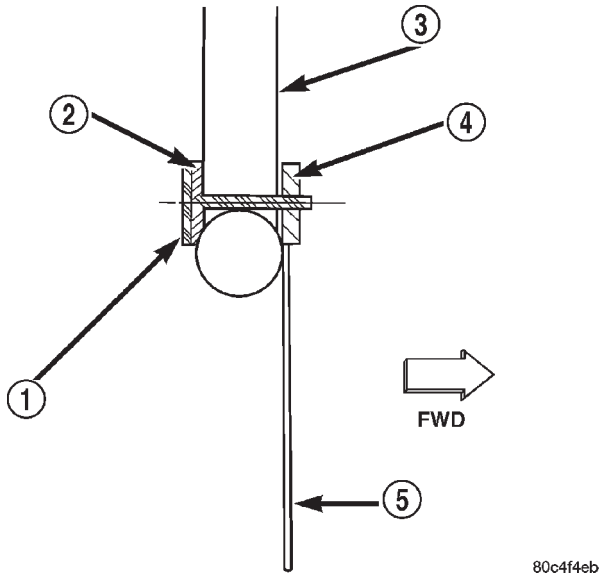

Fig. 50 Air Seal Mounting Rod

1 – MOUNTING ROD
2 – FOAM PAD
3 – CONDENSER
4 – LOCKING BUTTON
5 – SIDE AIR SEAL

(3) Position the condenser onto the cooling module.

(4) From the back of the cooling module, install and tighten the four screws that secure the condenser to the radiator supports. Tighten the screws to 7.9 N·m (70 in. lbs.).

(5) From the front of the cooling module, engage the tabs of the lower air seal with the slot at the bottom of each side air seal.

(6) Reinstall the cooling module into the vehicle. Refer to **Radiator** in Group 7 - Cooling System for the proper procedures.

(7) Remove the tape or plugs from the condenser outlet fitting and the refrigerant line fitting of the liquid line.

(8) Lubricate a new rubber O-ring seal with clean refrigerant oil and install it on the refrigerant line fitting of the liquid line. Use only the specified O-rings as they are made of a special material for the R-134a system. Use only refrigerant oil of the type recommended for the compressor in the vehicle.

(9) Reconnect the liquid line fitting to the condenser outlet fitting (lower fitting).

(10) Install and tighten the nut that secures the liquid line fitting to the condenser outlet fitting. Tighten the nut to 27.7 N·m (245 in. lbs.).

(11) Remove the tape or plugs from the condenser inlet fitting and the refrigerant line fitting of the discharge line.

(12) Lubricate a new rubber O-ring seal with clean refrigerant oil and install it on the refrigerant line fitting of the discharge line. Use only the specified O-rings as they are made of a special material for the R-134a system. Use only refrigerant oil of the type recommended for the compressor in the vehicle.

(13) Reconnect the discharge line fitting to the condenser inlet fitting.

(14) Install and tighten the nut that secures the discharge line fitting to the condenser inlet fitting. Tighten the nut to 27.7 N·m (245 in. lbs.).

(15) Reconnect the battery negative cable.

(16) Evacuate the refrigerant system. Refer to **Refrigerant System Evacuate** in this group for the proper procedures.

NOTE: If the condenser is replaced, add 30 milliliters (1 fluid ounce) of refrigerant oil to the refrigerant system. Use only refrigerant oil of the type recommended for the compressor in the vehicle.

(17) Charge the refrigerant system. Refer to **Refrigerant System Charge** in this group for the proper procedures.

DISCHARGE LINE

WARNING: REVIEW THE WARNINGS AND CAUTIONS IN THE FRONT OF THIS GROUP BEFORE PERFORMING THE FOLLOWING OPERATION.

REMOVAL

(1) Recover the refrigerant from the refrigerant system. Refer to **Refrigerant Recovery** in this group for the proper procedures.

(2) Remove the nut that secures the discharge line fitting to the inlet fitting (upper fitting) of the condenser (Fig. 51).

(3) Disconnect the discharge line fitting from the condenser inlet fitting.

(4) Remove the rubber O-ring seal from the refrigerant line fitting of the discharge line and discard.

(5) Install plugs in, or tape over the opened condenser inlet fitting and the refrigerant line fitting of the discharge line.

(6) Raise and support the vehicle.

(7) Remove the screw that secures the discharge line fitting to the compressor discharge port (Fig. 52).

REMOVAL AND INSTALLATION (Continued)

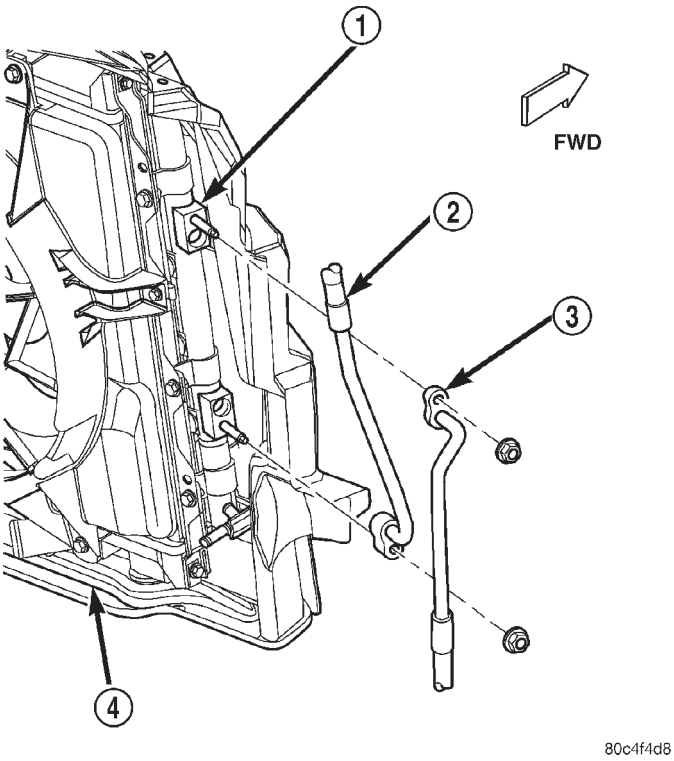

Fig. 51 A/C Refrigerant Lines - Condenser

1 – CONDENSER
2 – LIQUID LINE
3 – DISCHARGE LINE
4 – COOLING MODULE

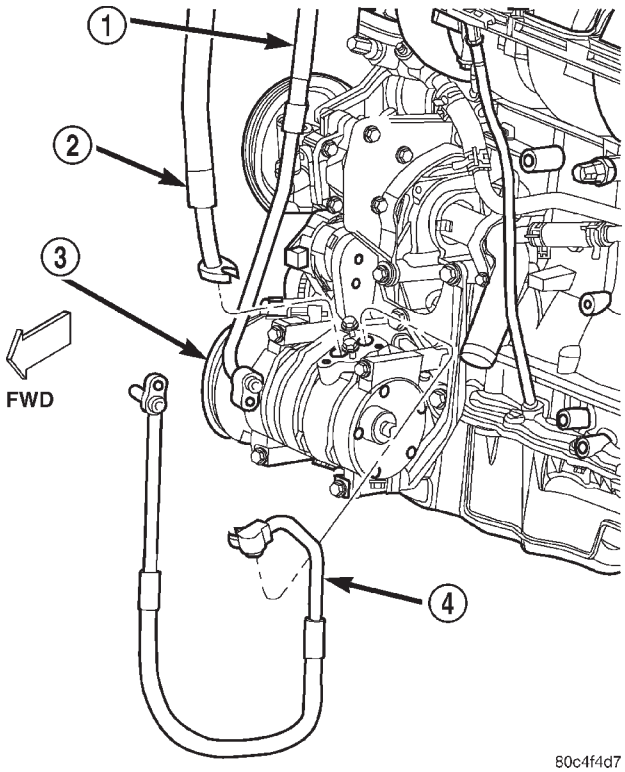

Fig. 52 A/C Refrigerant Lines - Compressor

1 – LIQUID LINE
2 – SUCTION LINE
3 – COMPRESSOR
4 – DISCHARGE LINE

(8) Disconnect the discharge line fitting from the compressor discharge port.

(9) Remove the rubber O-ring seal from the refrigerant line fitting of the discharge line and discard.

(10) Install plugs in, or tape over the opened compressor discharge port and the refrigerant line fitting of the discharge line.

(11) Remove the discharge line from the engine compartment.

INSTALLATION

(1) Position the discharge line into the engine compartment.

(2) Remove the tape or plugs from the compressor discharge port and the refrigerant line fitting of the discharge line.

(3) Lubricate a new rubber O-ring seal with clean refrigerant oil and install it on the refrigerant line fitting of the discharge line. Use only the specified O-rings as they are made of a special material for the R-134a system. Use only refrigerant oil of the type recommended for the compressor in the vehicle.

(4) Reconnect the discharge line fitting to the compressor discharge port.

(5) Install and tighten the screw that secures the discharge line fitting to the compressor discharge port. Tighten the screw to 12.2 N·m (108 in. lbs.).

(6) Lower the vehicle.

(7) Remove the tape or plugs from the condenser inlet fitting and the refrigerant line fitting of the discharge line.

(8) Lubricate a new rubber O-ring seal with clean refrigerant oil and install it on the refrigerant line fitting of the discharge line. Use only the specified O-rings as they are made of a special material for the R-134a system. Use only refrigerant oil of the type recommended for the compressor in the vehicle.

(9) Reconnect the discharge line fitting to the condenser inlet fitting.

(10) Install and tighten the nut that secures the discharge line fitting to the condenser inlet fitting. Tighten the nut to 27.7 N·m (245 in. lbs.).

(11) Evacuate the refrigerant system. Refer to **Refrigerant System Evacuate** in this group for the proper procedures.

(12) Charge the refrigerant system. Refer to **Refrigerant System Charge** in this group for the proper procedures.

REMOVAL AND INSTALLATION (Continued)

DUCTS

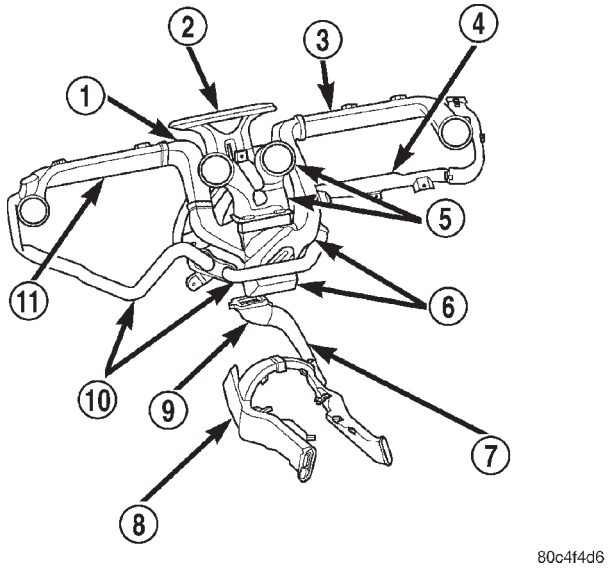

Fig. 53 Heater-A/C System Air Distribution Ducts

1 – INTERMEDIATE ELBOW
2 – DEFROSTER DUCT
3 – PANEL DUCT
4 – INTERMEDIATE DEMISTER DUCT
5 – CENTER AIR OUTLET DUCT
6 – AIR OUTLET DISTRIBUTION DUCT
7 – RIGHT REAR FLOOR DUCT
8 – LEFT REAR FLOOR DUCT
9 – ELBOW
10 – DEMISTER HOSES
11 – PANEL DUCT

AIR OUTLET DISTRIBUTION DUCT

(1) Remove the instrument panel assembly from the vehicle. Refer to **Instrument Panel Systems** for the proper procedures.

(2) Remove the screws that secure the air outlet distribution duct to the instrument panel (Fig. 53).

(3) Disengage the right demister hose from the integral retainer on the right side of the air outlet distribution duct and the intermediate demister duct.

(4) Disconnect both demister hoses from the nipples on the air outlet distribution duct.

(5) Disengage the air outlet distribution duct from the left panel duct intermediate elbow.

(6) Disengage the air outlet distribution duct from the right panel duct.

(7) Remove the air outlet distribution duct from the instrument panel.

(8) Reverse the removal procedures to install. Tighten the screws to 2.3 N·m (20 in. lbs.).

CENTER AIR OUTLET DUCT

(1) Remove the center bezel from the instrument panel. Refer to **Instrument Panel Systems** for the proper procedures.

(2) Remove the screws that secure the center air outlet duct to the instrument panel (Fig. 53).

(3) Disengage the center air outlet duct from the air outlet distribution duct.

(4) Remove the center air outlet duct from the instrument panel.

(5) Reverse the removal procedures to install. Tighten the screws to 2.3 N·m (20 in. lbs.).

DEFROSTER DUCT

(1) Remove the instrument panel assembly from the vehicle. Refer to **Instrument Panel Systems** for the proper procedures.

(2) Remove the defroster duct from the top of the heater-A/C unit housing (Fig. 53).

(3) Reverse the removal procedures to install.

DEMISTER HOSES

(1) Remove the air outlet distribution duct from the instrument panel. Refer to **Air Outlet Distribution Duct** for the proper procedures.

(2) Disengage the demister hose from the nipple on the air outlet distribution duct and, for the right demister hose only, from the integral retainer on the right side of the air outlet distribution duct (Fig. 53).

(3) Disengage the right demister hose from the intermediate duct, or disengage the left demister hose from the left demister outlet.

(4) Remove the demister hose from the instrument panel.

(5) Reverse the removal procedures to install.

INTERMEDIATE DEMISTER DUCT

(1) Remove the right demister hose from the instrument panel. Refer to **Demister Hoses** for the proper procedures.

(2) Remove the screws that secure the intermediate demister duct to the instrument panel (Fig. 53).

(3) Disengage the intermediate demister duct from the right demister outlet.

(4) Remove the intermediate demister duct from the instrument panel.

(5) Reverse the removal procedures to install. Tighten the screws to 2.3 N·m (20 in. lbs.).

INTERMEDIATE PANEL DUCT ELBOW

(1) Remove the air outlet distribution duct from the instrument panel. Refer to **Air Outlet Distribution Duct** for the proper procedures.

(2) Disengage the intermediate panel duct elbow from the left panel duct (Fig. 53).

(3) Reverse the removal procedures to install.

REMOVAL AND INSTALLATION (Continued)

PANEL DUCTS

(1) Remove the air outlet distribution duct from the instrument panel. Refer to **Air Outlet Distribution Duct** for the proper procedures.

(2) For the left panel duct only, remove the intermediate elbow from the instrument panel. Refer to **Intermediate Panel Duct Elbow** for the proper procedures.

(3) Remove the screws that secure the panel duct to the instrument panel (Fig. 53).

(4) Disengage the panel duct from the panel outlet.

(5) Remove the panel duct from the instrument panel.

(6) Reverse the removal procedures to install. Tighten the screws to 2.3 N·m (20 in. lbs.).

REAR FLOOR DUCTS

(1) Remove the center floor console from the vehicle. Refer to **Body** for the proper procedures.

(2) Remove the front floor carpet from the vehicle. Refer to **Body** for the proper procedures.

(3) Remove the screws that secure the rear floor duct to the top of the floor panel console bracket (Fig. 53).

(4) Disengage the left floor duct from the right floor duct at the cross-tunnel connection.

(5) For the right side rear floor duct only, disengage the rear floor duct from the rear seat duct elbow.

(6) Remove the rear floor duct from the vehicle.

(7) Reverse the removal procedures to install. Tighten the screws to 2.3 N·m (20 in. lbs.).

REAR SEAT DUCT ELBOW

(1) Remove the right side floor duct from the vehicle. Refer to **Rear Floor Duct** for the proper procedures.

(2) Disengage the remove the two push pin retainers that secure the rear seat duct elbow to the bottom of the front floor duct (Fig. 53).

(3) Remove the rear seat duct elbow from the front floor duct.

(4) Reverse the removal procedures to install.

EVAPORATOR

The evaporator is located within the heater-A/C unit housing. In order to access the evaporator for service, the heater-A/C unit housing must be removed from the vehicle and disassembled.

REMOVAL

(1) Remove and disassemble the heater-A/C unit housing. Refer to **Heater-A/C Unit Housing** for the proper procedures.

(2) Lift the evaporator out of the lower half of the heater-A/C unit housing (Fig. 54).

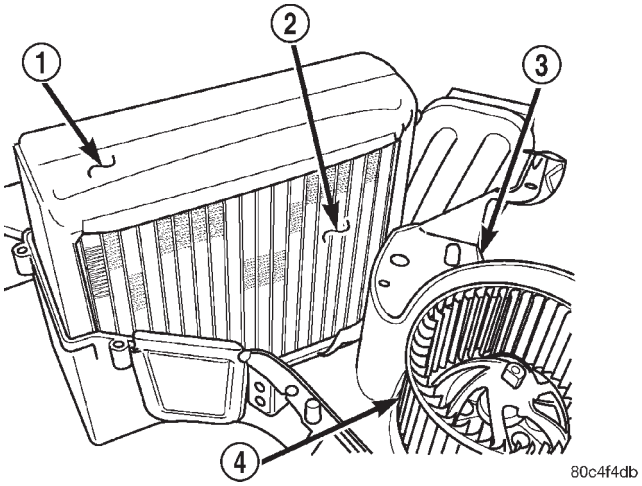

Fig. 54 Evaporator Remove/Install

1 – FOAM WRAP
2 – EVAPORATOR
3 – LOWER HEATER-A/C UNIT HOUSING
4 – BLOWER WHEEL

INSTALLATION

(1) Position the evaporator in the lower half of the heater-A/C unit housing. Be certain that the evaporator foam wrap is in place.

(2) Assemble and reinstall the heater-A/C unit housing.

NOTE: If the evaporator is replaced, add 59 milliliters (2 fluid ounces) of refrigerant oil to the refrigerant system. Use only refrigerant oil of the type recommended for the compressor in the vehicle.

HEATER CORE

The heater core is located within the heater-A/C unit housing. In order to access the heater core for service, the heater-A/C unit housing must be removed from the vehicle and disassembled.

REMOVAL

(1) Remove and disassemble the heater-A/C unit housing. Refer to **Heater-A/C Unit Housing** for the proper procedures.

(2) Lift the heater core out of the lower half of the heater-A/C unit housing (Fig. 55).

INSTALLATION

(1) Position the heater core in the lower half of the heater-A/C unit housing.

(2) Assemble and reinstall the heater-A/C unit housing.

REMOVAL AND INSTALLATION (Continued)

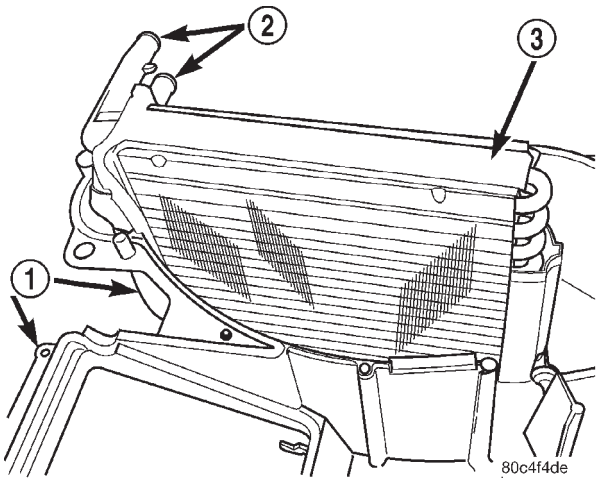

Fig. 55 Heater Core Remove/Install

1 – LOWER HEATER-A/C UNIT HOUSING
2 – HEATER CORE HOSE NIPPLES
3 – HEATER CORE

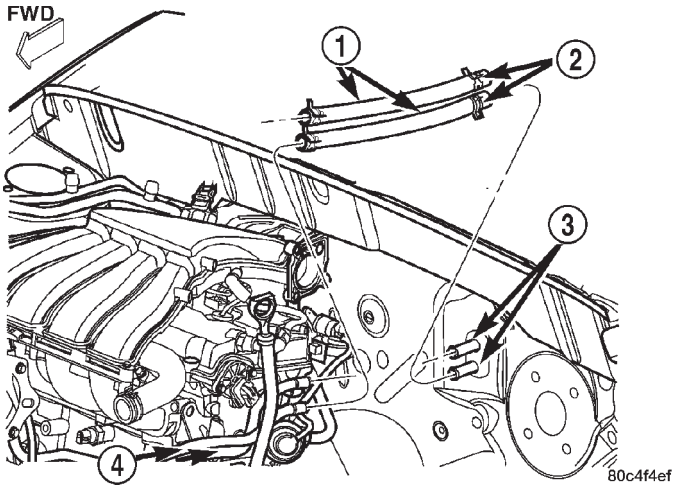

Fig. 56 Heater Hoses Remove/Install - Typical

1 – HEATER HOSES
2 – HOSE CLAMPS
3 – HEATER CORE NIPPLES

HEATER HOSE

WARNING: REVIEW THE WARNINGS AND CAUTIONS IN THE FRONT OF THIS GROUP BEFORE PERFORMING THE FOLLOWING OPERATION.

REMOVAL

(1) Drain the engine cooling system. Refer to **Cooling System** for the proper procedures.

(2) Using spring tension clamp pliers, slide the hose clamps that are clamped over the nipples at each end of the hose toward the center of the heater hose to be removed. Release the clamp when it is off of the nipple (Fig. 56).

CAUTION: When removing the heater hose from the heater core inlet or outlet nipples DO NOT apply excessive pressure. Excessive pressure may damage the nipples and/or the heater core causing an engine coolant leak.

(3) Grasp the end of the heater hose firmly and carefully twist the hose back and forth while pulling it away from the barbed end of the nipple. Repeat this step for the opposite end of the heater hose.

INSTALLATION

(1) Grasp the end of the heater hose firmly and carefully twist the hose back and forth while pushing it onto the barbed end of the nipple. Repeat this step for the opposite end of the heater hose.

(2) Using spring tension clamp pliers, slide the hose clamps from the center of the hose toward each nipple. Release the clamp when it is over the nipple.

(3) Refill the engine cooling system. Refer to **Cooling System** for the proper procedures.

HIGH PRESSURE CUT OUT SWITCH

WARNING: REVIEW THE WARNINGS AND CAUTIONS IN THE FRONT OF THIS GROUP BEFORE PERFORMING THE FOLLOWING OPERATION.

REMOVAL

(1) Recover the refrigerant from the refrigerant system. Refer to **Refrigerant Recovery** in this group for the proper procedures.

(2) Disconnect and isolate the battery negative cable.

(3) Raise and support the vehicle.

(4) Disconnect the engine wire harness connector from the high pressure cut out switch on the compressor back cover (Fig. 57).

(5) Using snap ring pliers, remove the internal snap ring that secures the high pressure cut out switch to the switch port in the compressor back cover.

(6) Pull the high pressure cut out switch out of the compressor back cover.

(7) Install a plug in, or tape over the opened switch port on the compressor back cover.

(8) Remove the rubber O-ring seal from the high pressure cut out switch and discard.

INSTALLATION

(1) Lubricate a new rubber O-ring seal with clean refrigerant oil and install it on the high pressure cut out switch. Use only the specified O-rings as they are

REMOVAL AND INSTALLATION (Continued)

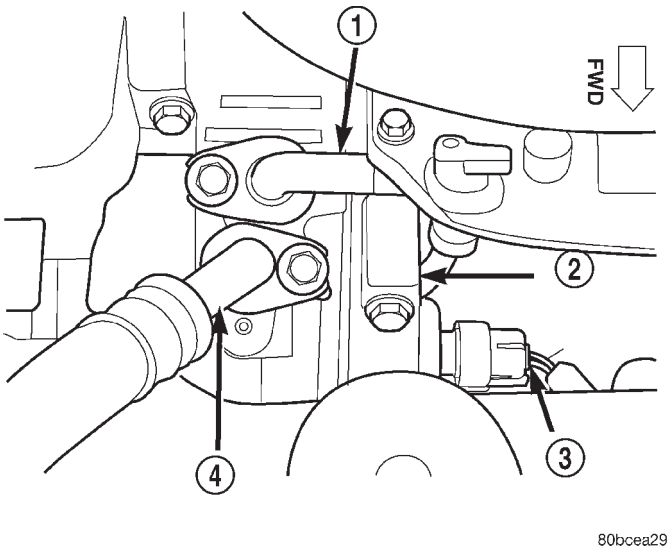

Fig. 57 High Pressure Cut Out Switch Location

1 – DISCHARGE LINE
2 – A/C COMPRESSOR
3 – HIGH PRESSURE CUT OUT SWITCH
4 – SUCTION LINE

made of a special material for the R-134a system. Use only refrigerant oil of the type recommended for the compressor in the vehicle.

(2) Remove the tape or plug from the switch port on the compressor back cover.

(3) Insert the high pressure cut out switch into the switch port on the compressor back cover.

(4) Using snap ring pliers, reinstall the internal snap ring that secures the high pressure cut out switch to the switch port in the compressor back cover.

(5) Reconnect the engine wire harness connector to the high pressure cut out switch on the compressor back cover.

(6) Lower the vehicle.

(7) Reconnect the battery negative cable.

(8) Evacuate the refrigerant system. Refer to **Refrigerant System Evacuate** in this group for the proper procedures.

(9) Charge the refrigerant system. Refer to **Refrigerant System Charge** in this group for the proper procedures.

LIQUID LINE

The liquid line includes the Variable Orifice Valve (VOV), which is located within this line. The VOV cannot be adjusted or repaired and, if faulty or damaged, the liquid line unit must be replaced.

WARNING: REVIEW THE WARNINGS AND CAUTIONS IN THE FRONT OF THIS GROUP BEFORE PERFORMING THE FOLLOWING OPERATION.

REMOVAL

(1) Recover the refrigerant from the refrigerant system. Refer to **Refrigerant Recovery** in this group for the proper procedures.

(2) Remove the nut that secures the liquid line fitting to the outlet fitting (lower fitting) of the condenser (Fig. 58).

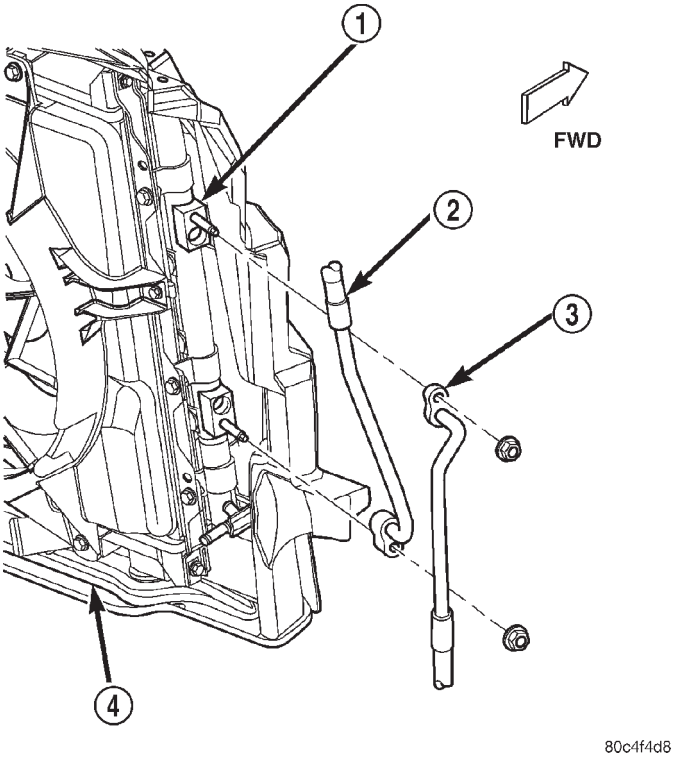

Fig. 58 A/C Refrigerant Lines - Condenser

1 – CONDENSER
2 – LIQUID LINE
3 – DISCHARGE LINE
4 – COOLING MODULE

(3) Disconnect the liquid line fitting from the condenser outlet fitting.

(4) Remove the rubber O-ring seal from the refrigerant line fitting of the liquid line and discard.

(5) Install plugs in, or tape over the opened condenser outlet fitting and the refrigerant line fitting of the liquid line.

(6) Remove the nut that secures the liquid line fitting (outboard fitting) to the mid-line connector block of the suction and liquid line assembly (Fig. 59).

(7) Disconnect the liquid line fitting from the mid-line connector block of the suction and liquid line assembly.

(8) Remove the rubber O-ring seal from the refrigerant line fitting of the liquid line and discard.

(9) Install plugs in, or tape over the opened mid-line connector block liquid line port and the refrigerant line fitting of the liquid line.

REMOVAL AND INSTALLATION (Continued)

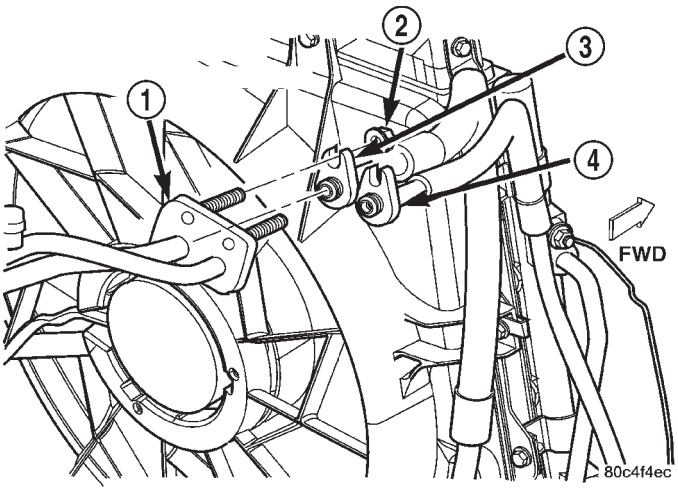

Fig. 59 A/C Refrigerant Lines - Mid-Line Connector

1 – SUCTION AND LIQUID LINE ASSEMBLY MID-LINE CONNECTOR BLOCK
2 – NUT
3 – SUCTION LINE
4 – LIQUID LINE

(10) Remove the liquid line from the engine compartment.

INSTALLATION

(1) Position the liquid line into the engine compartment.

(2) Remove the tape or plugs from the mid-line connector block liquid line port and the refrigerant line fitting of the liquid line.

(3) Lubricate a new rubber O-ring seal with clean refrigerant oil and install it on the refrigerant line fitting of the liquid line. Use only the specified O-rings as they are made of a special material for the R-134a system. Use only refrigerant oil of the type recommended for the compressor in the vehicle.

(4) Reconnect the liquid line fitting to the mid-line connector block liquid line port of the suction and liquid line assembly.

(5) Install and tighten the nut that secures the liquid line fitting to the mid-line connector block of the suction and liquid line assembly. Tighten the nut to 4.5 N·m (40 in. lbs.).

(6) Remove the tape or plugs from the condenser outlet fitting and the refrigerant line fitting of the liquid line.

(7) Lubricate a new rubber O-ring seal with clean refrigerant oil and install it on the refrigerant line fitting of the liquid line. Use only the specified O-rings as they are made of a special material for the R-134a system. Use only refrigerant oil of the type recommended for the compressor in the vehicle.

(8) Reconnect the liquid line fitting to the condenser outlet fitting.

(9) Install and tighten the nut that secures the discharge line fitting to the condenser outlet fitting. Tighten the nut to 27.7 N·m (245 in. lbs.).

(10) Evacuate the refrigerant system. Refer to **Refrigerant System Evacuate** in this group for the proper procedures.

(11) Charge the refrigerant system. Refer to **Refrigerant System Charge** in this group for the proper procedures.

LOW PRESSURE CLUTCH CYCLING SWITCH

REMOVAL

(1) Disconnect and isolate the battery negative cable.

(2) Disconnect the headlamp and dash wire harness connector from the low pressure clutch cycling switch on the top of the accumulator.

(3) ùUnscrew the low pressure cycling clutch switch from the fitting on the top of the accumulator (Fig. 60).

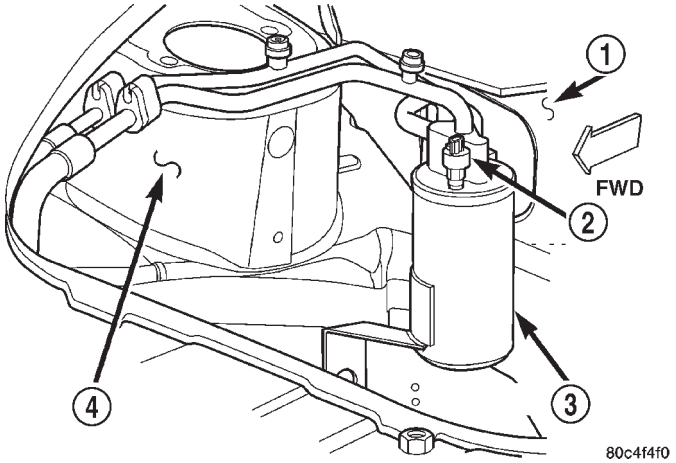

Fig. 60 Low Pressure Clutch Cycling Switch

1 – DASH PANEL
2 – LOW PRESSURE CLUTCH CYCLING SWITCH
3 – ACCUMULATOR
4 – LEFT FRONT STRUT TOWER

(4) Remove the rubber O-ring seal from the accumulator fitting and discard.

INSTALLATION

(1) Lubricate a new O-ring seal with clean refrigerant oil and install it on the accumulator fitting. Use only the specified O-rings as they are made of a special material for the R-134a system. Use only refrigerant oil of the type recommended for the compressor in the vehicle.

(2) Install and tighten the low pressure clutch cycling switch onto the accumulator fitting. The switch should be hand-tightened onto the accumulator fitting.

REMOVAL AND INSTALLATION (Continued)

(3) Reconnect the headlamp and dash wire harness connector to the low pressure clutch cycling switch.

(4) Reconnect the battery negative cable.

MODE CONTROL CABLE

REMOVAL

(1) Disconnect and isolate the battery negative cable.

(2) Remove the center bezel from the instrument panel. Refer to **Instrument Panel Systems** for the proper procedures.

(3) Remove the center air duct from the instrument panel. Refer to **Ducts** for the proper procedures.

(4) Remove the heater-A/C control from the instrument panel. Refer to **Instrument Panel Systems** for the proper procedures.

(5) Reach through the instrument panel center air duct opening to access and remove the screw that secures the mode control cable housing retainer to the top of the heater-A/C unit housing (Fig. 61).

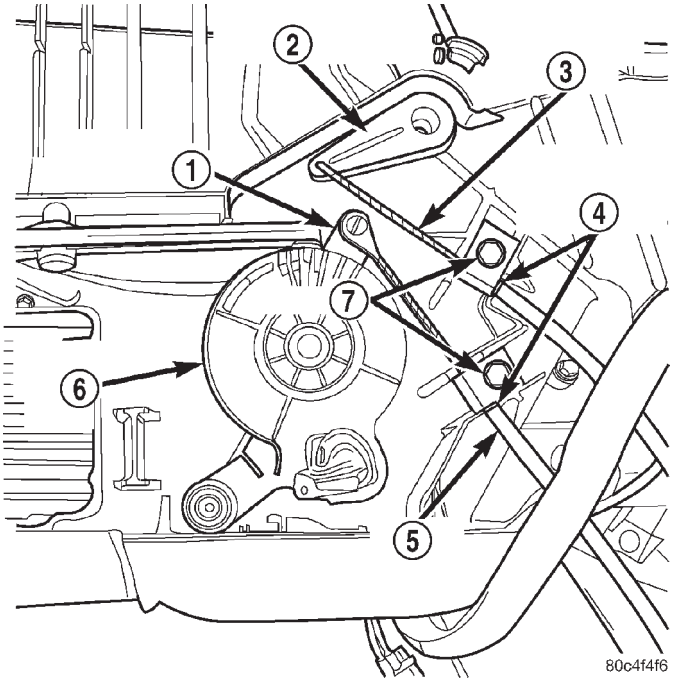

Fig. 61 Heater-A/C Control Cables

1 – MODE DOOR LEVER
2 – BLEND-AIR DOOR LEVER
3 – TEMPERATURE CONTROL CABLE
4 – CABLE HOUSING RETAINERS
5 – MODE CONTROL CABLE
6 – MODE DOOR CAM
7 – SCREW

(6) Disconnect the mode control cable end from the mode door lever.

(7) Remove the mode control cable through the instrument panel heater-A/C control opening.

INSTALLATION

(1) Position the mode control cable through the instrument panel heater-A/C control opening.

(2) Reach through the instrument panel center air duct opening to access and reconnect the mode control cable end to the mode door lever.

(3) Install and tighten the screw that secures the mode control cable housing retainer to the top of the heater-A/C unit housing. Tighten the screw to 2.3 N·m (20 in. lbs.).

(4) Reinstall the heater-A/C control into the instrument panel. Refer to **Instrument Panel Systems** for the proper procedures.

(5) Adjust the mode control cable. Refer to **Adjustments** for the proper procedures.

(6) Reinstall the center air duct into the instrument panel. Refer to **Ducts** for the proper procedures.

(7) Reinstall the center bezel onto the instrument panel. Refer to **Instrument Panel Systems** for the proper procedures.

(8) Reconnect the battery negative cable.

RECIRCULATION DOOR ACTUATOR

REMOVAL

(1) Disconnect and isolate the battery negative cable.

(2) Remove the instrument panel from the vehicle. Refer to **Instrument Panel Systems** for the proper procedures.

(3) Disconnect the vacuum harness connector from the nipple on the recirculation door actuator.

(4) Release the latch that secures the recirculation door actuator mount to the stanchion on the heater-A/C unit housing, and disengage the recirculation door actuator from the housing (Fig. 62).

(5) Disconnect the recirculation door actuator linkage from the recirculation door lever.

(6) Remove the recirculation door actuator from the heater-A/C unit housing.

INSTALLATION

(1) Position the recirculation door actuator to the heater-A/C unit housing.

(2) Reconnect the recirculation door actuator linkage to the recirculation door lever.

(3) Align the recirculation door actuator mount to the stanchion on the heater-A/C unit housing, and press it onto the stanchion firmly and to engage the latch.

(4) Reconnect the vacuum harness connector to the nipple on the recirculation door actuator.

REMOVAL AND INSTALLATION (Continued)

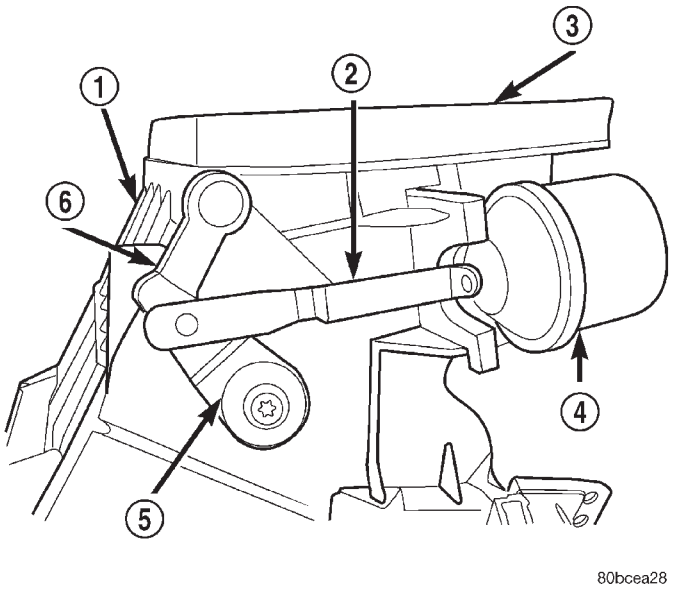

Fig. 62 Recirculation Door Actuator and Linkage

1 – OUTSIDE AIR/RECIRC DOOR HOUSING
2 – VACUUM ACTUATOR LINKAGE
3 – FOAM SEAL
4 – RECIRC DOOR VACUUM ACTUATOR
5 – DOOR LEVER
6 – DOOR LEVER

(5) Reinstall the instrument panel into the vehicle. Refer to **Instrument Panel Systems** for the proper procedures.

(6) Reconnect the battery negative cable.

SUCTION AND LIQUID LINE ASSEMBLY

WARNING: REVIEW THE WARNINGS AND CAUTIONS IN THE FRONT OF THIS GROUP BEFORE PERFORMING THE FOLLOWING OPERATION.

REMOVAL

(1) Recover the refrigerant from the refrigerant system. Refer to **Refrigerant Recovery** in this group for the proper procedures.

(2) Disconnect and isolate the battery negative cable.

(3) If the vehicle is so equipped, relocate the vehicle speed control servo as necessary to access the accumulator. Refer to **Vehicle Speed Control System** for the proper procedures.

(4) Remove the nut that secures the liquid line fitting (outboard fitting) to the mid-line connector block of the suction and liquid line assembly (Fig. 63).

(5) Disconnect the liquid line fitting from the mid-line connector block of the suction and liquid line assembly.

(6) Remove the rubber O-ring seal from the refrigerant line fitting of the liquid line and discard.

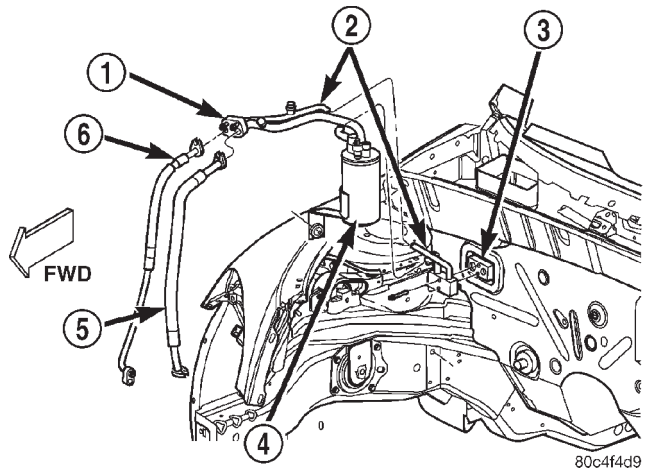

Fig. 63 Suction and Liquid Line Assembly Remove/ Install

1 – MID-LINE CONNECTOR BLOCK
2 – SUCTION & LIQUID LINE ASSEMBLY
3 – EVAPORATOR
4 – ACCUMULATOR
5 – SUCTION LINE
6 – LIQUID LINE

(7) Install plugs in, or tape over the opened mid-line connector block liquid line port and the refrigerant line fitting of the liquid line.

(8) Remove the nut that secures the suction line fitting to the mid-line connector block of the suction and liquid line assembly.

(9) Disconnect the suction line fitting from the mid-line connector block of the suction and liquid line assembly.

(10) Remove the rubber O-ring seal from the refrigerant line fitting of the suction line and discard.

(11) Install plugs in, or tape over the opened mid-line connector block suction line port and the refrigerant line fitting of the suction line.

(12) Remove the two screws that secure the two refrigerant line fittings of the suction and liquid line assembly to the accumulator connector block inlet and outlet ports.

(13) Disconnect the two refrigerant line fittings of the suction and liquid line assembly from the accumulator connector block inlet and outlet ports.

(14) Remove the rubber O-ring seal from the refrigerant line fittings of the suction and liquid line assembly and discard.

(15) Install plugs in, or tape over the opened accumulator connector block inlet and outlet ports and the refrigerant line fittings of the suction and liquid line assembly.

(16) Remove the two screws that secure the suction and liquid line assembly evaporator connector block to the evaporator.

REMOVAL AND INSTALLATION (Continued)

(17) Disconnect the suction and liquid line assembly evaporator connector block from the evaporator.

(18) Remove the gasket from the suction and liquid line assembly evaporator connector block and discard.

(19) Install plugs in, or tape over the opened suction and liquid line assembly evaporator connector block ports and the evaporator inlet and outlet ports.

(20) Remove the suction and liquid line assembly from the engine compartment.

INSTALLATION

(1) Position the suction and liquid line assembly into the engine compartment.

(2) Remove the tape or plugs from the suction and liquid line assembly evaporator connector block ports and the evaporator inlet and outlet ports.

(3) Align the suction and liquid line assembly evaporator connector block and a new gasket to the evaporator inlet and outlet ports.

(4) Install and tighten the two screws that secure the suction and liquid line assembly evaporator connector block to the evaporator. Tighten the upper screw to 11.3 N·m (100 in. lbs.) first, then tighten the lower screw.

(5) Remove the tape or plugs from the accumulator connector block inlet and outlet ports and the refrigerant line fittings of the suction and liquid line assembly.

(6) Lubricate new rubber O-ring seals with clean refrigerant oil and install them on the refrigerant line fittings of the suction and liquid line assembly. Use only the specified O-rings as they are made of a special material for the R-134a system. Use only refrigerant oil of the type recommended for the compressor in the vehicle.

(7) Reconnect the refrigerant line fittings of the suction and liquid line assembly to the accumulator connector block inlet and outlet ports.

(8) Install and tighten the two screws that secure the two refrigerant line fittings of the suction and liquid line assembly to the accumulator connector block inlet and outlet ports. Tighten the screws to 2.3 N·m (20 in. lbs.).

(9) Remove the tape or plugs from the mid-line connector block suction line port and the refrigerant line fitting of the suction line.

(10) Lubricate a new rubber O-ring seal with clean refrigerant oil and install it on the refrigerant line fitting of the suction line. Use only the specified O-rings as they are made of a special material for the R-134a system. Use only refrigerant oil of the type recommended for the compressor in the vehicle.

(11) Reconnect the suction line fitting to the mid-line connector block suction line port of the suction and liquid line assembly.

(12) Install and tighten the nut that secures the suction line fitting to the mid-line connector block of the suction and liquid line assembly. Tighten the nut to 4.5 N·m (40 in. lbs.).

(13) Remove the tape or plugs from the mid-line connector block liquid line port and the refrigerant line fitting of the liquid line.

(14) Lubricate a new rubber O-ring seal with clean refrigerant oil and install it on the refrigerant line fitting of the liquid line. Use only the specified O-rings as they are made of a special material for the R-134a system. Use only refrigerant oil of the type recommended for the compressor in the vehicle.

(15) Reconnect the liquid line fitting to the mid-line connector block liquid line port of the suction and liquid line assembly.

(16) Install and tighten the nut that secures the liquid line fitting to the mid-line connector block of the suction and liquid line assembly. Tighten the nut to 4.5 N·m (40 in. lbs.).

(17) If the vehicle is so equipped, reinstall the vehicle speed control servo. Refer to **Vehicle Speed Control System** for the proper procedures.

(18) Reconnect the battery negative cable.

(19) Evacuate the refrigerant system. Refer to **Refrigerant System Evacuate** in this group for the proper procedures.

(20) Charge the refrigerant system. Refer to **Refrigerant System Charge** in this group for the proper procedures.

SUCTION LINE

WARNING: REVIEW THE WARNINGS AND CAUTIONS IN THE FRONT OF THIS GROUP BEFORE PERFORMING THE FOLLOWING OPERATION.

REMOVAL

(1) Recover the refrigerant from the refrigerant system. Refer to **Refrigerant Recovery** in this group for the proper procedures.

(2) Remove the nut that secures the suction line fitting (inboard fitting) to the mid-line connector block of the suction and liquid line assembly (Fig. 64).

(3) Disconnect the suction line fitting from the mid-line connector block of the suction and liquid line assembly.

(4) Remove the rubber O-ring seal from the refrigerant line fitting of the suction line and discard.

(5) Install plugs in, or tape over the opened mid-line connector block suction line port and the refrigerant line fitting of the suction line.

(6) Raise and support the vehicle.

(7) Remove the screw that secures the suction line fitting to the compressor discharge port (Fig. 65).

REMOVAL AND INSTALLATION (Continued)

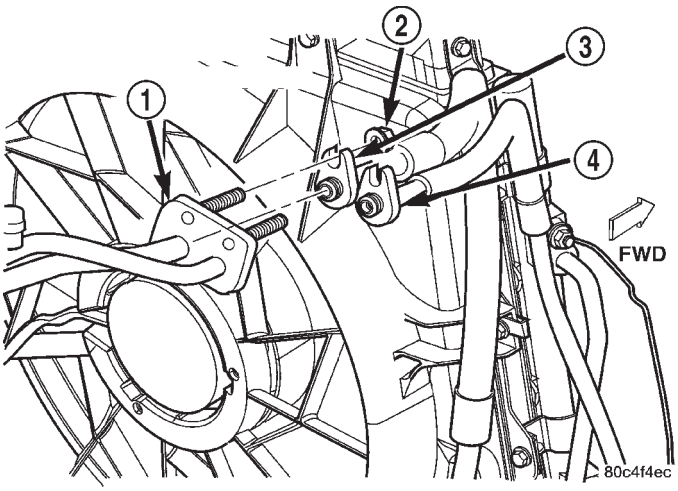

Fig. 64 A/C Refrigerant Lines - Mid-Line Connector

1 – SUCTION AND LIQUID LINE ASSEMBLY MID-LINE CONNECTOR BLOCK
2 – NUT
3 – SUCTION LINE
4 – LIQUID LINE

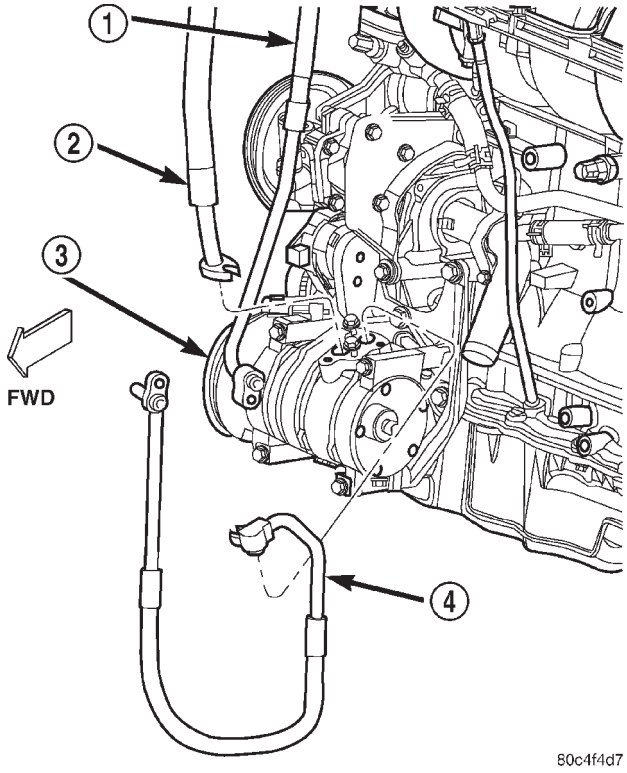

Fig. 65 A/C Refrigerant Lines - Compressor

1 – LIQUID LINE
2 – SUCTION LINE
3 – COMPRESSOR
4 – DISCHARGE LINE

(8) Disconnect the suction line fitting from the compressor suction port.

(9) Remove the rubber O-ring seal from the refrigerant line fitting of the suction line and discard.

(10) Install plugs in, or tape over the opened compressor suction port and the refrigerant line fitting of the suction line.

(11) Remove the suction line from the engine compartment.

INSTALLATION

(1) Position the suction line into the engine compartment.

(2) Remove the tape or plugs from the compressor suction port and the refrigerant line fitting of the suction line.

(3) Lubricate a new rubber O-ring seal with clean refrigerant oil and install it on the refrigerant line fitting of the suction line. Use only the specified O-rings as they are made of a special material for the R-134a system. Use only refrigerant oil of the type recommended for the compressor in the vehicle.

(4) Reconnect the suction line fitting to the compressor suction port.

(5) Install and tighten the screw that secures the suction line fitting to the compressor suction port. Tighten the screw to 12.2 N·m (108 in. lbs.).

(6) Lower the vehicle.

(7) Remove the tape or plugs from the mid-line connector block suction line port and the refrigerant line fitting of the suction line.

(8) Lubricate a new rubber O-ring seal with clean refrigerant oil and install it on the refrigerant line fitting of the suction line. Use only the specified O-rings as they are made of a special material for the R-134a system. Use only refrigerant oil of the type recommended for the compressor in the vehicle.

(9) Reconnect the suction line fitting to the mid-line connector block suction line port of the suction and liquid line assembly.

(10) Install and tighten the nut that secures the suction line fitting to the mid-line connector block of the suction and liquid line assembly. Tighten the nut to 4.5 N·m (40 in. lbs.).

(11) Evacuate the refrigerant system. Refer to **Refrigerant System Evacuate** in this group for the proper procedures.

(12) Charge the refrigerant system. Refer to **Refrigerant System Charge** in this group for the proper procedures.

TEMPERATURE CONTROL CABLE

REMOVAL

(1) Disconnect and isolate the battery negative cable.

REMOVAL AND INSTALLATION (Continued)

(2) Remove the center bezel from the instrument panel. Refer to **Instrument Panel Systems** for the proper procedures.

(3) Remove the center air duct from the instrument panel. Refer to **Ducts** for the proper procedures.

(4) Remove the heater-A/C control from the instrument panel. Refer to **Instrument Panel Systems** for the proper procedures.

(5) Reach through the instrument panel center air duct opening to access and remove the screw that secures the temperature control cable housing retainer to the top of the heater-A/C unit housing (Fig. 66).

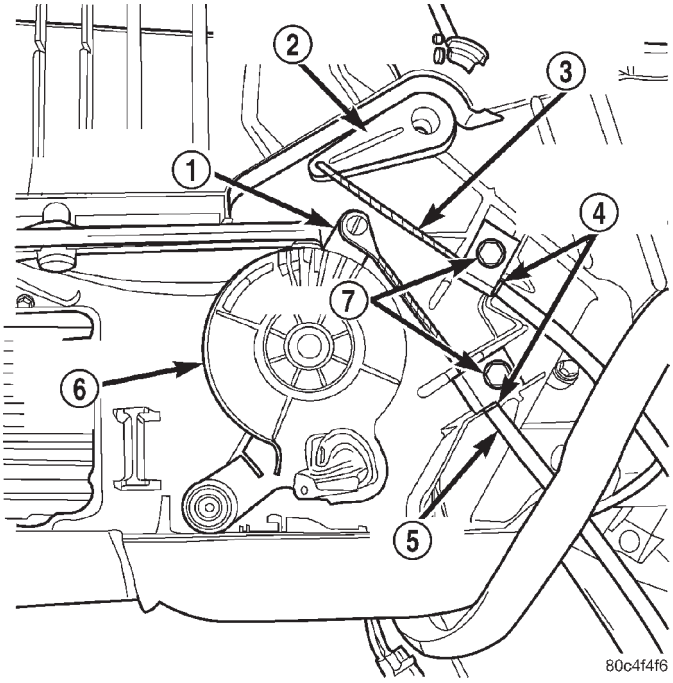

Fig. 66 Heater-A/C Control Cables

1 – MODE DOOR LEVER
2 – BLEND-AIR DOOR LEVER
3 – TEMPERATURE CONTROL CABLE
4 – CABLE HOUSING RETAINERS
5 – MODE CONTROL CABLE
6 – MODE DOOR CAM
7 – SCREW

(6) Disconnect the temperature control cable end from the blend-air door lever.

(7) Remove the temperature control cable through the instrument panel heater-A/C control opening.

INSTALLATION

(1) Position the temperature control cable through the instrument panel heater-A/C control opening.

(2) Reach through the instrument panel center air duct opening to access and reconnect the temperature control cable end to the blend-air door lever.

(3) Install and tighten the screw that secures the temperature control cable housing retainer to the top of the heater-A/C unit housing. Tighten the screw to 2.3 N·m (20 in. lbs.).

(4) Reinstall the heater-A/C control into the instrument panel. Refer to **Instrument Panel Systems** for the proper procedures.

(5) Adjust the temperature control cable. Refer to **Adjustments** for the proper procedures.

(6) Reinstall the center air duct into the instrument panel. Refer to **Ducts** for the proper procedures.

(7) Reinstall the center bezel onto the instrument panel. Refer to **Instrument Panel Systems** for the proper procedures.

(8) Reconnect the battery negative cable.

VARIABLE ORIFICE VALVE

The Variable Orifice Valve (VOV) is located in the liquid line near the condenser. If the VOV is faulty or plugged, the liquid line unit must be replaced. Refer to **Liquid Line** for the proper procedures.

HEATER-A/C UNIT HOUSING

The heater-A/C unit housing must be removed from the vehicle and disassembled to provide service access to the heater core or the evaporator.

WARNING: REVIEW THE WARNINGS AND CAUTIONS IN THE FRONT OF THIS GROUP BEFORE PERFORMING THE FOLLOWING OPERATION.

REMOVAL

(1) If the vehicle is equipped with the optional heater-A/C system, recover the refrigerant from the refrigerant system. Refer to **Refrigerant Recovery** in this group for the proper procedures.

(2) Drain the engine cooling system. Refer to **Cooling System** for the proper procedures.

(3) Disconnect and isolate the battery negative cable.

(4) Remove the instrument panel from the vehicle. Refer to **Instrument Panel Systems** for the proper procedures.

(5) Disconnect the heater hoses from the heater core nipples at the dash panel. Refer to **Heater Hose** for the proper procedures.

(6) Install plugs in the heater core nipples to prevent engine coolant spillage during heater-A/C unit housing removal.

(7) If the vehicle is so equipped, relocate the vehicle speed control servo as necessary to access the right side of the dash panel. Refer to **Vehicle Speed Control System** for the proper procedures.

(8) If the vehicle is equipped with the optional heater-A/C system:

REMOVAL AND INSTALLATION (Continued)

(a) Remove the two screws that secure the suction and liquid line assembly evaporator connector block to the evaporator.

(b) Disconnect the suction and liquid line assembly evaporator connector block from the evaporator.

(c) Remove the gasket from the suction and liquid line assembly evaporator connector block and discard.

(d) Install plugs in, or tape over the opened suction and liquid line assembly evaporator connector block ports and the evaporator inlet and outlet ports.

(e) Remove the condensate drain tube from the heater-A/C unit housing drain. Refer to **Condensate Drain Tube** for the proper procedures.

(f) Disconnect the vacuum harness connector from the A/C vacuum check valve nipple near the power brake booster (Fig. 67).

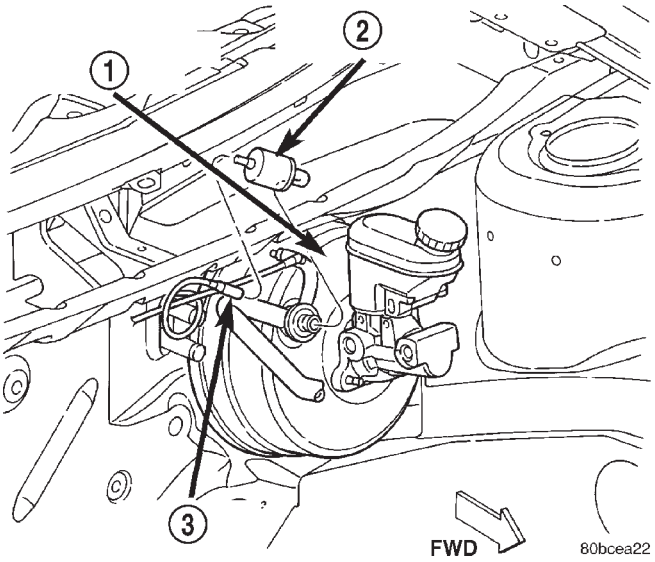

Fig. 67 Heater-A/C Vacuum Harness

1 – BRAKE POWER BOOSTER
2 – A/C VACUUM CHECK VALVE
3 – VACUUM HARNESS

(9) Remove the defroster duct from the heater-A/C unit housing. Refer to **Ducts** for the proper procedures.

(10) Remove the three nuts that secure the heater-A/C unit housing to the engine compartment side of the dash panel (Fig. 68).

(11) Remove the screw that secures the right end of the heater-A/C unit housing to the weld flange of the dash panel and cowl plenum panel in the passenger compartment.

(12) Remove the nut that secures the heater-A/C unit housing to the cowl plenum bracket and stud on the passenger compartment side of the dash panel.

(13) Remove the heater-A/C unit housing from the vehicle.

INSTALLATION

(1) Position the heater-A/C unit housing into the vehicle. Be certain that the housing studs, heater core nipples and, if equipped, the heater-A/C unit housing drain, vacuum harness and evaporator inlet and outlet connector block are all inserted/routed through the proper openings of the dash panel.

(2) Loosely install the nut that secures the heater-A/C unit housing to the cowl plenum bracket and stud on the passenger compartment side of the dash panel.

(3) Loosely install the screw that secures the right end of the heater-A/C unit housing to the weld flange of the dash panel and cowl plenum panel in the passenger compartment.

(4) Install and tighten the three nuts that secure the heater-A/C unit housing to the engine compartment side of the dash panel. Tighten the nuts to 5.1 N·m (45 in. lbs.).

(5) Tighten the screw that secures the right end of the heater-A/C unit housing to the weld flange of the dash panel and cowl plenum panel in the passenger compartment to 5.1 N·m (45 in. lbs.).

(6) Tighten the nut that secures the heater-A/C unit housing to the cowl plenum bracket and stud on the passenger compartment side of the dash panel to 5.1 N·m (45 in. lbs.).

(7) Reinstall the defroster duct onto the heater-A/C unit housing. Refer to **Ducts** for the proper procedures.

(8) If the vehicle is equipped with the optional heater-A/C system:

(a) Reconnect the vacuum harness connector to the A/C vacuum check valve nipple near the power brake booster.

(b) Reinstall the condensate drain tube onto the heater-A/C unit housing drain. Refer to **Condensate Drain Tube** for the proper procedures.

(c) Remove the tape or plugs from the suction and liquid line assembly evaporator connector block ports and the evaporator inlet and outlet ports.

(d) Align the suction and liquid line assembly evaporator connector block and a new gasket to the evaporator inlet and outlet ports.

(e) Install and tighten the two screws that secure the suction and liquid line assembly evaporator connector block to the evaporator. Tighten the upper screw first to 11.3 N·m (100 in. lbs.), then tighten the lower screw.

(9) If the vehicle is so equipped, reinstall the vehicle speed control servo. Refer to **Vehicle Speed Control System** for the proper procedures.

(10) Remove the plugs from the heater core nipples.

REMOVAL AND INSTALLATION (Continued)

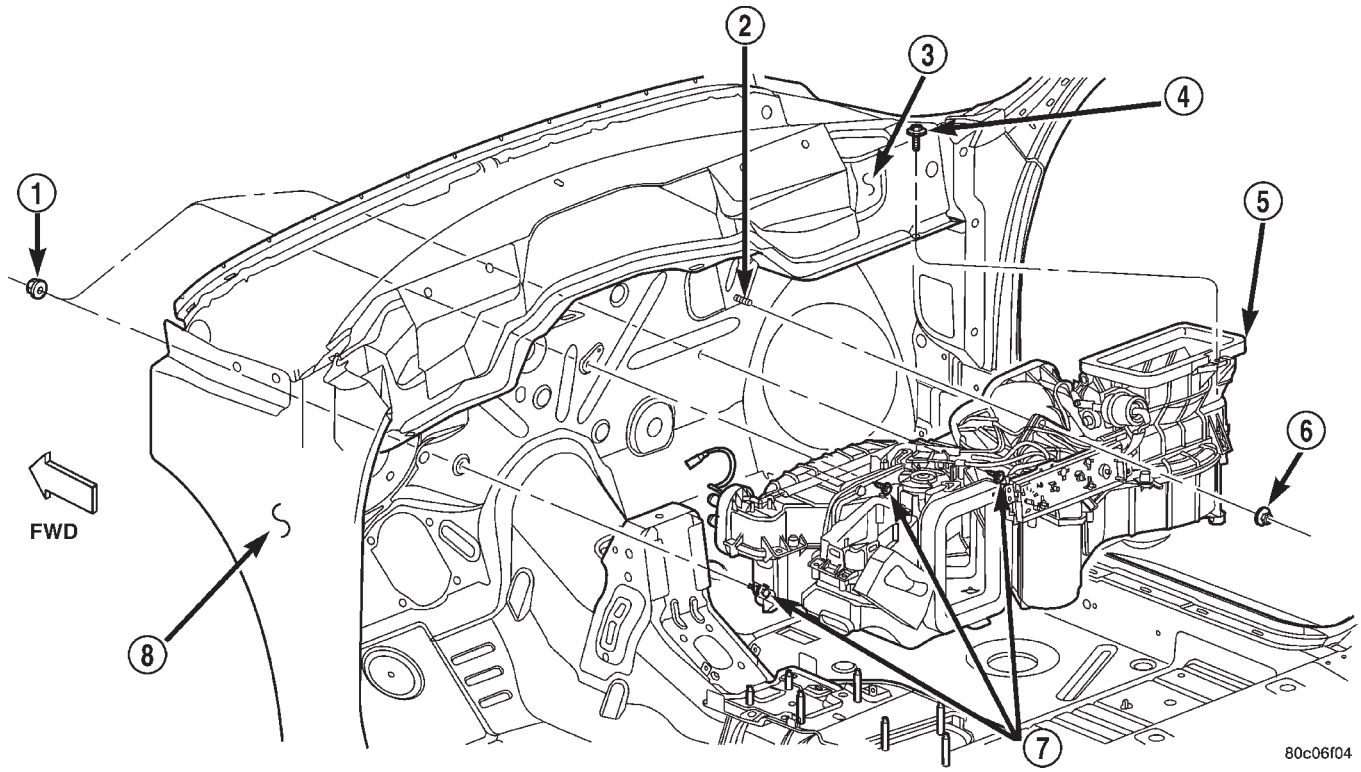

Fig. 68 Heater-A/C Unit Housing Remove/Install

1 – NUT
2 – STUD
3 – PLENUM PANEL
4 – SCREW
5 – HEATER-A/C UNIT HOUSING
6 – NUT
7 – STUDS
8 – DASH PANEL

(11) Reconnect the heater hoses to the heater core nipples at the dash panel. Refer to **Heater Hose** for the proper procedures.

(12) Reinstall the instrument panel to the vehicle. Refer to **Instrument Panel Systems** for the proper procedures.

(13) Reconnect the battery negative cable.

(14) Refill the engine cooling system. Refer to **Cooling System** for the proper procedures.

(15) If the vehicle is equipped with the optional heater-A/C system, evacuate the refrigerant system. Refer to **Refrigerant System Evacuate** in this group for the proper procedures.

NOTE: If the evaporator is replaced, add 59 milliliters (2 fluid ounces) of refrigerant oil to the refrigerant system. Use only refrigerant oil of the type recommended for the compressor in the vehicle.

(16) If the vehicle is equipped with the optional heater-A/C system, charge the refrigerant system. Refer to **Refrigerant System Charge** in this group for the proper procedures.

DISASSEMBLY AND ASSEMBLY

HEATER-A/C UNIT HOUSING

DISASSEMBLY

(1) Remove the heater-A/C unit housing from the vehicle and place it on a suitable work surface. Refer to **Heater-A/C Unit Housing** for the proper procedures.

(2) Using a sharp razor or knife, carefully cut the foam seals on the air distribution outlets along the parting line between the upper and lower halves of the heater-A/C unit housing (Fig. 69).

(3) Carefully remove the foam seal from the heater-A/C unit housing mounting flange where the nipples of the heater core exit the left end of the housing (Fig. 70).

DISASSEMBLY AND ASSEMBLY (Continued)

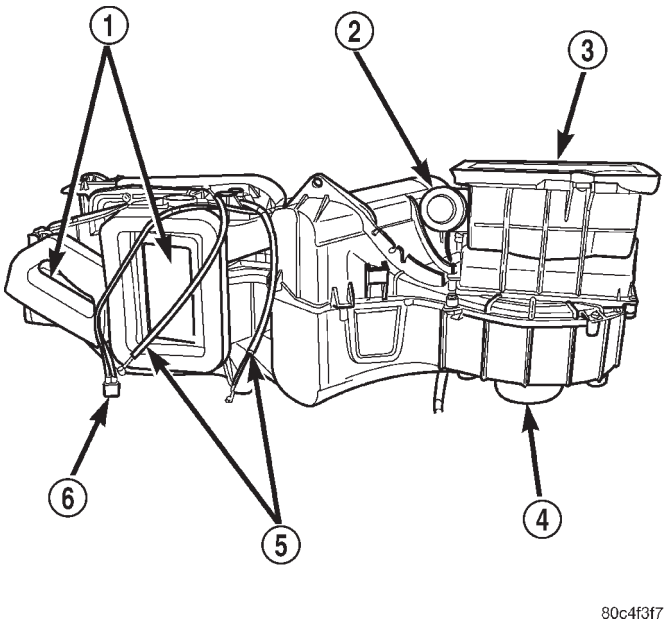

Fig. 69 Heater-A/C Unit Housing Foam Seals

1 – AIR DISTRIBUTION
2 – RECIRCULATION DOOR VACUUM ACTUATOR
3 – AIR INLET
4 – BLOWER MOTOR
5 – CONTROL CABLES
6 – VACUUM HARNESS

(4) If the vehicle is equipped with the optional A/C, using a sharp razor or knife, carefully cut the foam seal on the heater-A/C unit housing mounting flange along the parting line between the upper and lower halves of the housing where the evaporator tubes and connector block exit near the right end of the housing (Fig. 71).

(5) Remove all of the clips and screws that secure the upper and lower halves of the heater-A/C unit housing to each other.

(6) Carefully separate the two halves of the heater-A/C unit housing. If there is any difficulty in separating the housing halves, check carefully for clips or screws that were overlooked in Step 5.

ASSEMBLY

(1) If the vehicle is equipped with the optional A/C, before reassembly of the heater-A/C unit housing, be certain that the foam wrap is in place on the evaporator and that the evaporator tube rubber seal is properly captured in the channel at the evaporator mounting flange of the housing.

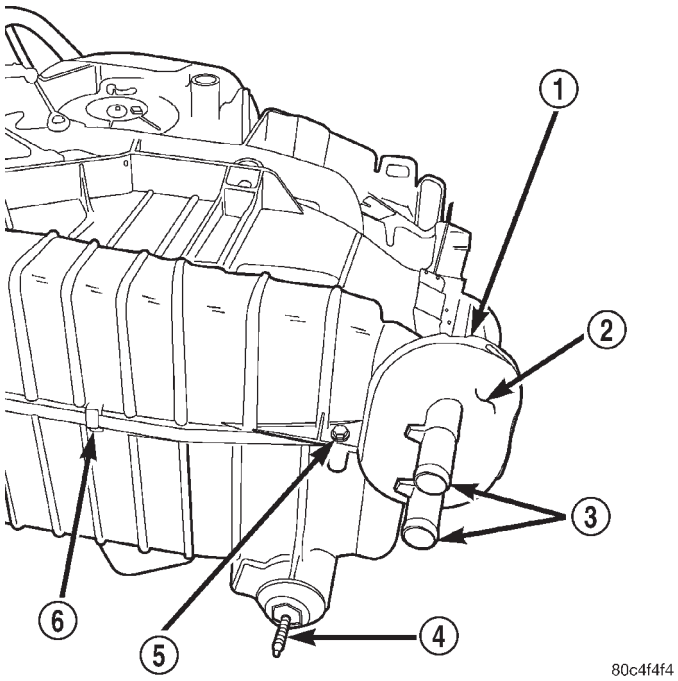

Fig. 70 Heater-A/C Unit Housing Heater Core Flange

1 – MOUNTING FLANGE
2 – FOAM SEAL
3 – HEATER CORE NIPPLES
4 – HOUSING MOUNTING STUD
5 – SCREW
6 – CLIP

(2) Assemble the upper half of the heater-A/C unit housing to the lower half. Be certain that the pivot shaft ends for the blend-air door and each mode door are properly positioned in their pivot holes in the housing.

(3) Reinstall all of the clips and screws that secure the upper and lower halves of the heater-A/C unit housing to each other. Tighten the screws to 2.3 N·m (20 in. lbs.).

(4) Reinstall the foam seal onto the heater-A/C unit housing mounting flange where the nipples of the heater core exit the left end of the housing.

(5) Reinstall the heater-A/C unit housing into the vehicle. Refer to **Heater-A/C Unit Housing** for the proper procedures.

DISASSEMBLY AND ASSEMBLY (Continued)

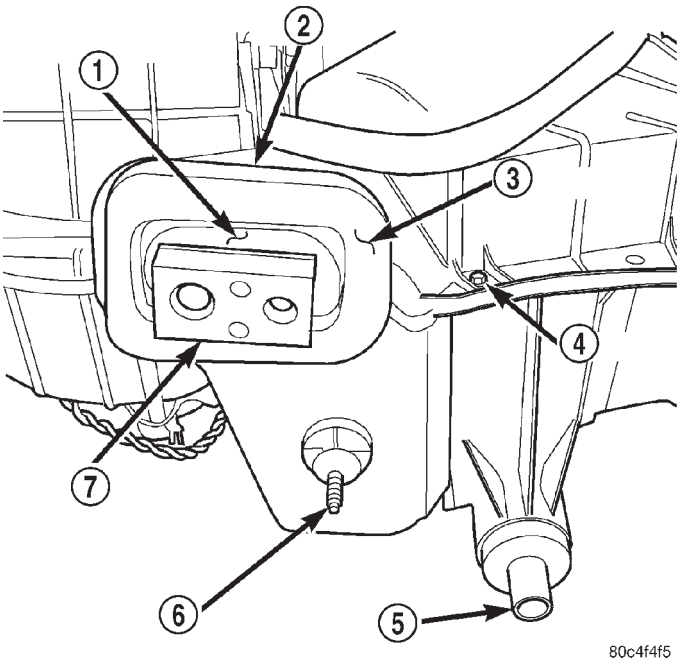

Fig. 71 Heater-A/C Unit Housing Evaporator Flange

1 – EVAPORATOR TUBE RUBBER SEAL
2 – MOUNTING FLANGE
3 – FOAM SEAL
4 – SCREW
5 – HOUSING DRAIN
6 – HOUSING MOUNTING STUD
7 – EVAPORATOR CONNECTOR BLOCK

ADJUSTMENTS

MODE CONTROL CABLE

(1) Engage cable to actuator arm lever on mode door and attach to housing.

(2) Attach other end of cable to instrument panel control.

(3) Turn the mode knob completely counterclockwise.

(4) While holding the knob in the counterclockwise position, pull on the gray casing of the mode cable. This will take up any free play in the cable and index the mode door to the mode knob.

(5) Then snap the cable hold down clip into position.

TEMPERATURE CONTROL CABLE

(1) Engage cable to actuator arm on temperature door and attach to housing.

(2) Attach other end of cable to instrument panel control.

(3) Turn the temperature knob completely counterclockwise.

(4) While holding the knob in the counterclockwise position, pull on the gray casing of the temperature cable. This will take up any free play in the cable and index the temperature door to the temperature knob.

(5) Then snap the cable hold down clip into position.

(6) Remount control.

SPECIFICATIONS

A/C APPLICATION TABLE

ITEM	DESCRIPTION	NOTES
Vehicle	PT Cruiser	
System	Variable Orifice Valve	
Total Refrigerant Capacity	R134a	709 grams / 25 oz / 1.57 lbs
Total Oil Capacity	ND-8 PAG oil	160 ml / 5.4 oz
Compressor	Nippondenso 10S15 - Man Trans Nippondenso 10S17 - Auto Trans	
Freeze-up Control	Low pressure clutch cycling switch	input to PCM, accumulator mounted, cycles clutch off below 34° F, cycles back on above 45° F
Low psi Control	Low pressure clutch cycling switch	accumulator mounted, opens < 22 ± 1 psi, resets > 39 ± 1 psi
High psi Control	High pressure switch	compressor mounted, opens > 470 psi, resets < 370 - 330 psi
Control head	Manual type	
Mode Door	Cable	
Blend Air Door	Cable	
Fresh/Recirc door	Vacuum actuator	
Blower Motor	Control head switched	resistor block
Cooling Fan	Variable speed	PCM controlled ISO solid state fan relay
Clutch		
Control	Relay	PCM
Draw	2.5 amps @ 12V	± 0.5V @ 70° F
Gap	0.014” - 0.026″	
DRB III®		
Reads	TPS, RPM, A/C switch test, fin sensor A/C & fan relays	
Actuators	Fan & clutch relays	

HEATING AND AIR CONDITIONING

TABLE OF CONTENTS

page

DESCRIPTION AND OPERATION
HEATING AND A/C SYSTEM - RHD 1
RECIRCULATION CONTROL CABLE - RHD 1
REMOVAL AND INSTALLATION
RECIRCULATION CONTROL CABLE - RHD 1
ACCUMULATOR - RHD. 2
LIQUID / SUCTION LINE ASSEMBLY- RHD 3
DISCHARGE LINE - RHD 4
LIQUID LINE - RHD 4
SUCTION LINE - RHD 5
HVAC UNIT HOUSING - RHD. 5

DESCRIPTION AND OPERATION

HEATING AND A/C SYSTEM - RHD

The heating and air conditioning system information in this section of the service manual is pertinent only to Right Hand Drive (RHD) vehicles. Since the description, operation, diagnosis and testing of components are the same as LHD vehicles. Refer to the left hand drive service manual for detailed information.

RECIRCULATION CONTROL CABLE - RHD

DESCRIPTION

Right Hand Drive (RHD) PT vehicles utilize a mechanical recirculation control cable (Fig. 1). On LHD vehicles this function is controlled by engine vacuum and a vacuum actuator.

OPERATION

The HVAC recirculation control system has two settings, closed to outside air (Recirculation) and open to outside air. With the rotation of the recirculation control knob, the recirculation control cable and door will direct the air flowing through the heat exchangers (heater core, evap.) to mix with outside air or restrict to interior air only. This can be beneficial when trying to cool down a hot car, when the outside air temperature is excessively high.

REMOVAL AND INSTALLATION

RECIRCULATION CONTROL CABLE - RHD

REMOVAL

(1) Remove the air filter housing from the vehicle. Refer to the Fuel section of the service manual for detailed instructions.

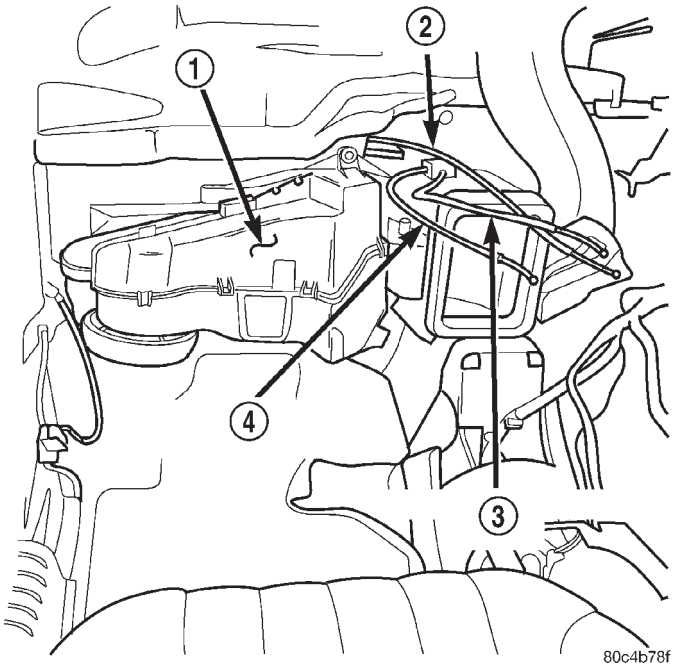

Fig. 1 RHD PT HVAC Control Cables

1 – HVAC HOUSING
2 – RECIRCULATION CONTROL CABLE
3 – MODE CONTROL CABLE
4 – TEMPERATURE CONTROL CABLE

(2) Disconnect and isolate the negative battery cable.

(3) Remove the HVAC control head from the instrument panel. Refer to Instrument Panel Systems for detailed procedure.

(4) Remove the glove box from the vehicle. Refer to Instrument Panel Systems for detailed procedure.

(5) Working through glove box opening (Fig. 2), disconnect the recirculation control cable.

(6) Carefully fish the control cable out of the instrument panel.

REMOVAL AND INSTALLATION (Continued)

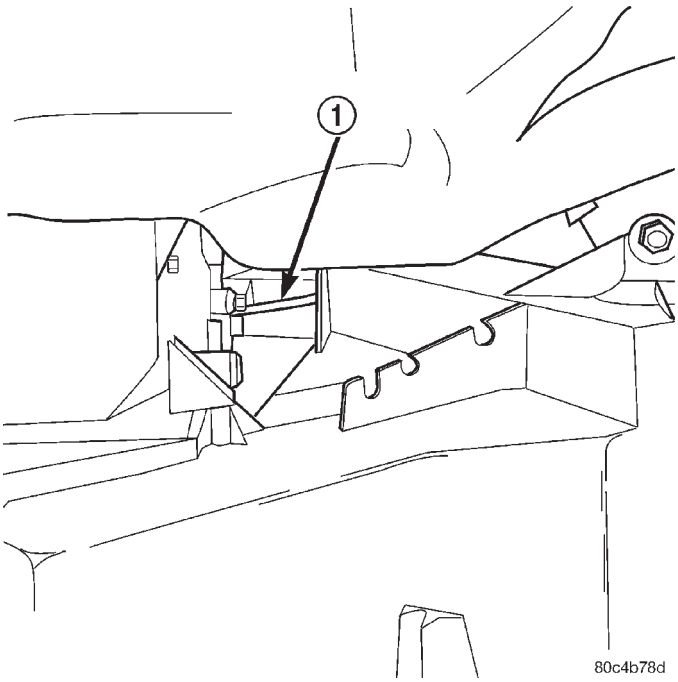

Fig. 2 Accessing Recirculation Control Cable

1 – RECIRCULATION CONTROL CABLE

INSTALLATION

(1) Install the control cable in its original position in the I.P.

(2) Working through glove box opening (Fig. 2), connect the recirculation control cable.

(3) Install the glove box in the vehicle. Refer to Instrument Panel Systems for detailed procedure.

(4) Install the HVAC control head in the instrument panel. Refer to Instrument Panel Systems for detailed procedure.

(5) Connect the negative battery cable.

(6) Install air filter housing.

ACCUMULATOR - RHD

REMOVAL

(1) Remove the air filter housing from the vehicle. Refer to the Fuel section of the service manual for detailed instructions.

(2) Disconnect and isolate the negative battery cable.

(3) Remove the PCM from its mounting location (Fig. 3) and position it out of the way. It should not be necessary to disconnect the PCM electrical connectors.

(4) Disconnect the low pressure switch electrical connector (Fig. 4). Located on the accumulator.

(5) Recover the refrigerant from the A/C system. Refer to the Heat and A/C section of the service manual for the procedure.

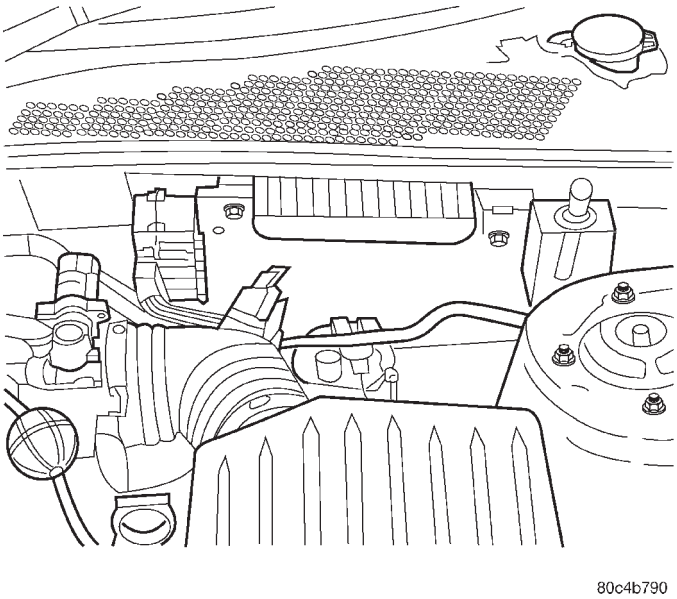

Fig. 3 RHD PT PCM Position & Orientation

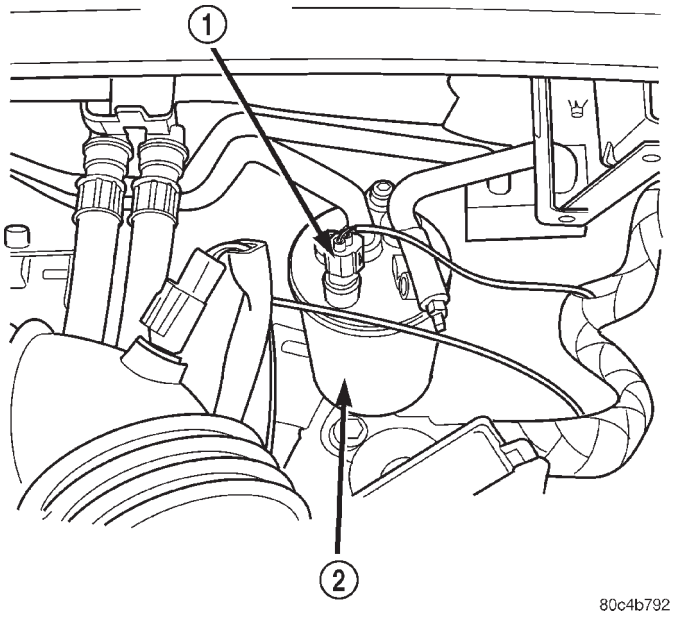

Fig. 4 RHD PT Accumulator

1 – LOWER PRESSURE SWITCH
2 – ACCUMULATOR

(6) Remove the low pressure switch from the accumulator (Fig. 4).

(7) Remove the liquid line retaining bolt from the accumulator (Fig. 4).

(8) Remove the suction line retaining bolt from the accumulator (Fig. 4).

(9) Remove the accumulator retaining fasteners and remove the accumulator from the vehicle.

REMOVAL AND INSTALLATION (Continued)

INSTALLATION

(1) Install the accumulator in its mounting position and install retaining screws.

(2) Connect the suction line on the accumulator. Be certain O-rings are free of tears and well lubricated with R134a refrigerant oil prior to assembly. Torque fastener to 20 in. lbs.

(3) Connect the liquid line on the accumulator. Be certain O-rings are free of tears and well lubricated with R134a refrigerant oil prior to assembly. Torque fastener to 20 in. lbs.

(4) Install the low pressure switch on the accumulator. Refer to the Heat and A/C section of the service manual for detailed instructions.

(5) Evacuate and recharge the refrigerant system. Refer to the Heat and A/C section of the service manual for the procedure.

(6) Connect the low pressure switch electrical connector.

(7) Install the PCM in its mounting location (Fig. 3).

(8) Connect the negative battery cable.

(9) Install the air filter housing.

LIQUID / SUCTION LINE ASSEMBLY- RHD

The liquid / suction line assembly is the one-piece refrigerant line assembly that runs along the rear of the engine compartment.

REMOVAL

(1) Remove the air filter housing from the vehicle.

(2) Disconnect and isolate the negative battery cable.

(3) Recover the refrigerant from the A/C system. Refer to the Heat and A/C section of the service manual for the procedure.

(4) Remove the PCM from its mounting location (Fig. 5). Refer to the Fuel section of the service manual for detailed instructions.

(5) Remove suction line retaining bolt from the accumulator (Fig. 6) and remove line from accumulator.

(6) Remove liquid line retaining bolt from the accumulator (Fig. 6) and remove line from accumulator.

(7) Remove the refrigerant line connector block retaining bolt. This is located just to the left of the accumulator on the dash panel.

(8) Disconnect the suction line at the mid-line connection block. Located just over the front engine torque strut.

(9) Disconnect the liquid line at the mid-line connection block.

(10) Remove the liquid / suction line assembly from the vehicle through the top of the engine compartment.

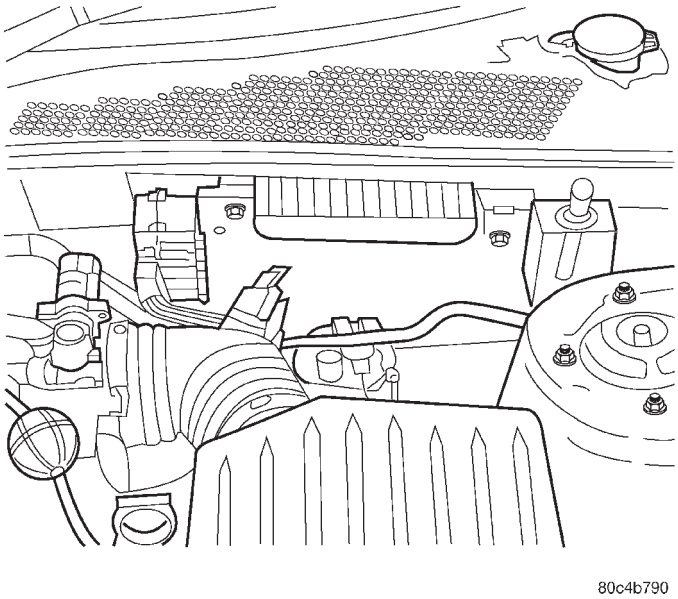

Fig. 5 RHD PT PCM Position and Orientation

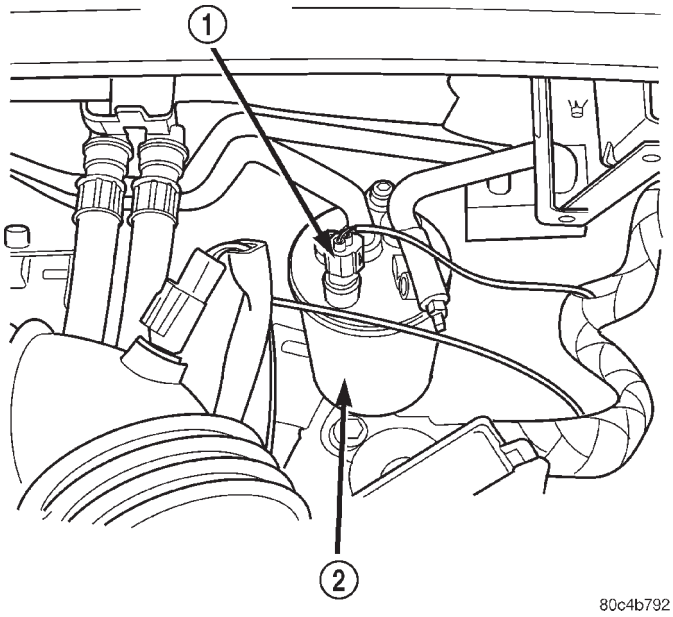

Fig. 6

1 – LOW PRESSURE SWITCH
2 – ACCUMULATOR

INSTALLATION

(1) Position the replacement liquid / suction line in position on the vehicle.

(2) Connect the suction line at accumulator. Be certain O-rings are free of tears and well lubricated with R134a refrigerant oil prior to assembly. Torque the line retaining bolt to 20 in. lbs.

(3) Connect the liquid line at accumulator. Be certain O-rings are free of tears and well lubricated with R134a refrigerant oil prior to assembly. Torque the line retaining bolt to 20 in. lbs.

REMOVAL AND INSTALLATION (Continued)

(4) Connect the refrigerant line connector block at dash panel. Be certain sealing surface is clean and a new sealing gasket is installed. Starting with the upper retaining bolt, torque both bolts to 100 in. lbs.

(5) Connect the suction line at the mid-line connection block. Be certain O-rings are free of tears and well lubricated with R134a refrigerant oil prior to assembly. Torque the line retaining nut to 40 in. lbs.

(6) Connect the liquid line at the mid-line connection block. Be certain O-rings are free of tears and well lubricated with R134a refrigerant oil prior to assembly. Torque the line retaining nut to 40 in. lbs.

(7) Evacuate and recharge the refrigerant system. Refer to the Heat and A/C section of the service manual for the procedure.

(8) Check the suction line connections for leaks.

(9) Install the PCM in its mounting position.

(10) Connect the negative battery cable.

(11) Install the air filter housing.

DISCHARGE LINE - RHD

REMOVAL

(1) Remove the air filter housing from the vehicle.

(2) Disconnect and isolate the negative battery cable.

(3) Recover the refrigerant from the A/C system. Refer to the Heat and A/C section of the service manual for the procedure.

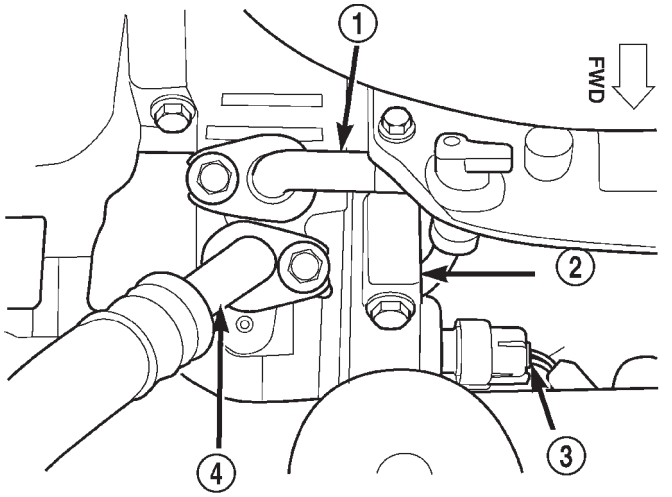

Fig. 7 Suction and Discharge Lines at Compressor

1 – DISCHARGE LINE
2 – A/C COMPRESSOR
3 – HIGH PRESSURE CUT OUT SWITCH
4 – SUCTION LINE

(4) Remove discharge line mounting bolt at the compressor (Fig. 8) and remove line from compressor.

(5) Remove discharge line mounting nut on the top fitting on the condenser and remove from the condenser.

(6) Raise the vehicle on a hoist.

(7) Remove the discharge line from the vehicle through the bottom of the engine compartment.

INSTALLATION

(1) Position the replacement discharge line in position on the vehicle. Do not attempt to install bolts at this time.

(2) Lower the vehicle from the hoist.

(3) Connect discharge line at compressor. Be certain O-rings are free of tears and well lubricated with R134a refrigerant oil prior to assembly. Torque the line retaining bolt to 12.2 N·m (108 in. lbs.).

(4) Connect discharge line at condenser. Be certain O-rings are free of tears and well lubricated with R134a refrigerant oil prior to assembly. Torque the line retaining nut to 27 N·m (245 in. lbs.).

(5) Evacuate and recharge the refrigerant system. Refer to the Heat and A/C section of the service manual for the procedure.

(6) Check the discharge line connections for leaks.

(7) Connect the negative battery cable.

(8) Install the air filter housing.

LIQUID LINE - RHD

REMOVAL

(1) Remove the air filter housing from the vehicle.

(2) Disconnect and isolate the negative battery cable.

(3) Recover the refrigerant from the A/C system. Refer to the Heat and A/C section of the service manual for the procedure.

(4) Remove the liquid line mounting nut at the mid-line connection block and disconnect line.

(5) Remove the grille assembly from the vehicle. Refer to the Body section of the service manual for detailed instructions.

(6) Remove the liquid line mounting nut on the lower fitting of the condenser and remove line from condenser.

(7) Remove the liquid line from the vehicle through the top of the engine compartment.

INSTALLATION

(1) Position the replacement liquid line in position on the vehicle. Do not attempt to install bolts at this time.

(2) Connect the liquid line at condenser. Be certain O-rings are free of tears and well lubricated with R134a refrigerant oil prior to assembly. Torque the line retaining bolt to 27 N·m (245 in. lbs.).

REMOVAL AND INSTALLATION (Continued)

(3) Connect liquid line at mid-line connection. Be certain O-rings are free of tears and well lubricated with R134a refrigerant oil prior to assembly. Torque the line retaining nut to 40 in. lbs.

(4) Evacuate and recharge the refrigerant system. Refer to the Heat and A/C section of the service manual for the procedure.

(5) Check the liquid line connections for leaks.

(6) Connect the negative battery cable.

(7) Install the air filter housing.

SUCTION LINE - RHD

REMOVAL

(1) Remove the air filter housing from the vehicle.

(2) Disconnect and isolate the negative battery cable.

(3) Recover the refrigerant from the A/C system. Refer to the Heat and A/C section of the service manual for the procedure.

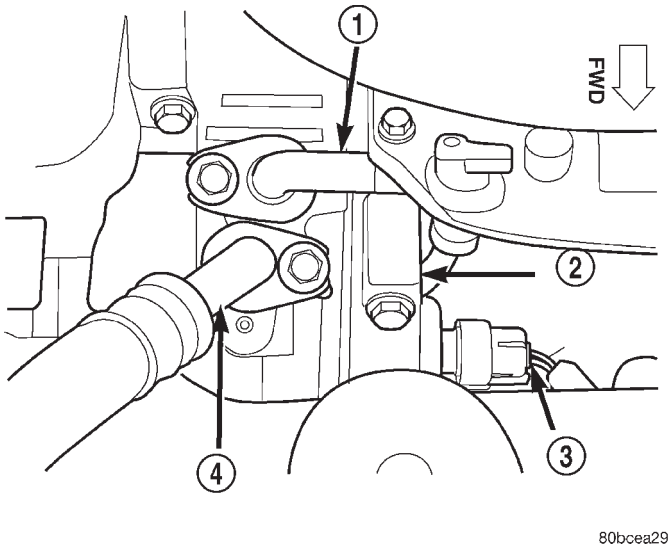

Fig. 8 Suction and Discharge Lines at Compressor

1 – DISCHARGE LINE
2 – A/C COMPRESSOR
3 – HIGH PRESSURE CUT OUT SWITCH
4 – SUCTION LINE

(4) Remove suction line mounting bolt at the compressor (Fig. 8) and remove line from compressor.

(5) Disconnect the suction line at the mid-line connection block. Located just over the front engine torque strut.

(6) Remove the suction line from the vehicle through the top of the engine compartment.

INSTALLATION

(1) Position the replacement suction line in position on the vehicle.

(2) Connect the suction line at compressor. Be certain O-rings are free of tears and well lubricated with R134a refrigerant oil prior to assembly. Torque the line retaining bolt to 12.2 N·m (108 in. lbs.).

(3) Connect the suction line at the mid-line connection block.. Be certain O-rings are free of tears and well lubricated with R134a refrigerant oil prior to assembly. Torque the line retaining nut to 40 in. lbs.

(4) Evacuate and recharge the refrigerant system. Refer to the Heat and A/C section of the service manual for the procedure.

(5) Check the suction line connections for leaks.

(6) Connect the negative battery cable.

(7) Install the air filter housing.

HVAC UNIT HOUSING - RHD

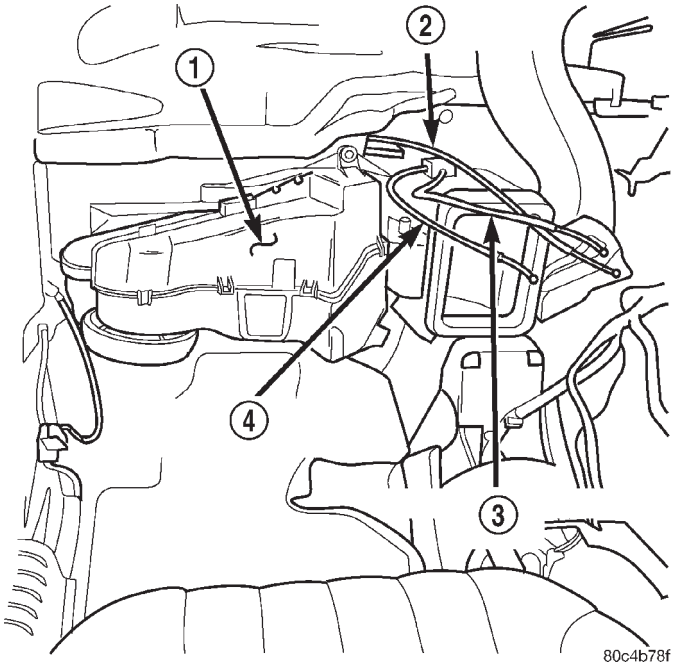

Fig. 9 RHD HVAC Housing

1 – HVAC HOUSING
2 – RECIRCULATION CONTROL CABLE
3 – MODE CONTROL CABLE
4 – TEMPERATURE CONTROL CABLE

The RHD PT vehicle utilizes a identical / symmetrically opposite instrument panel and components as the LHD PT. Refer to the LHD HVAC unit housing removal and installation procedure for detailed instructions.

2001 PT CRUISER

EMISSION CONTROL SYSTEMS

TABLE OF CONTENTS

page

ON-BOARD DIAGNOSTICS 1
EVAPORATIVE EMISSION CONTROLS 26
EXHAUST GAS RECIRCULATION (EGR) SYSTEM 35

ON-BOARD DIAGNOSTICS

TABLE OF CONTENTS

page

DESCRIPTION AND OPERATION
SYSTEM DESCRIPTION 1
MALFUNCTION INDICATOR LAMP (MIL) 2
DRB III STATE DISPLAY TEST MODE 2
DRB III CIRCUIT ACTUATION TEST MODE 2
DIAGNOSTIC TROUBLE CODES 2
DIAGNOSTIC TROUBLE CODE DESCRIPTIONS 3
TASK MANAGER 12
MONITORED SYSTEMS. 15
TRIP DEFINITION 19
MONITORED COMPONENT. 20
NON-MONITORED CIRCUITS 24
HIGH AND LOW LIMITS 24
SPECIFICATIONS
LOAD VALUE 25

DESCRIPTION AND OPERATION

SYSTEM DESCRIPTION

OPERATION

The Powertrain Control Module (PCM) monitors many different circuits in the fuel injection, ignition, emission and engine systems. If the PCM senses a problem with a monitored circuit often enough to indicate an actual problem, it stores a Diagnostic Trouble Code (DTC) in the PCM's memory. If the code applies to a non-emissions related component or system, and the problem is repaired or ceases to exist, the PCM cancels the code after 40 warmup cycles. Diagnostic trouble codes that affect vehicle emissions illuminate the Malfunction Indicator Lamp (MIL). Refer to Malfunction Indicator Lamp in this section.

Certain criteria must be met before the PCM stores a DTC in memory. The criteria may be a specific range of engine RPM, engine temperature, and/or input voltage to the PCM.

The PCM might not store a DTC for a monitored circuit even though a malfunction has occurred. This may happen because one of the DTC criteria for the circuit has not been met. **For example**, assume the diagnostic trouble code criteria requires the PCM to monitor the circuit only when the engine operates between 750 and 2000 RPM. Suppose the sensor's output circuit shorts to ground when engine operates above 2400 RPM (resulting in 0 volt input to the PCM). Because the condition happens at an engine speed above the maximum threshold (2000 rpm), the PCM will not store a DTC.

There are several operating conditions for which the PCM monitors and sets DTC's. Refer to Monitored Systems, Components, and Non-Monitored Circuits in this section.

NOTE: Various diagnostic procedures may actually cause a diagnostic monitor to set a DTC. For instance, pulling a spark plug wire to perform a spark test may set the misfire code. When a repair is completed and verified, use the DRB scan tool to erase all DTC's and extinguish the MIL.

Technicians can display stored DTC's by using the DRB scan tool. Refer to Diagnostic Trouble Codes in this section. For DTC information, refer to charts in this section.

DESCRIPTION AND OPERATION (Continued)

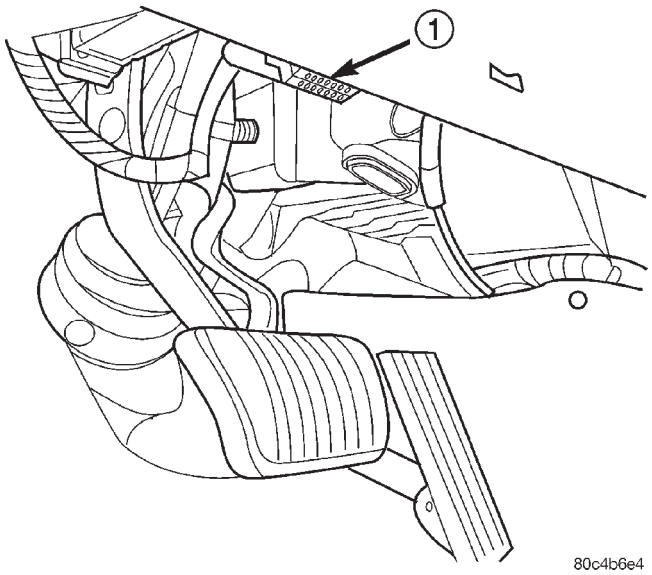

Fig. 1 Data Link (Diagnostic) Connector

1 – DATA LINK CONNECTOR

MALFUNCTION INDICATOR LAMP (MIL)

DESCRIPTION

The Malfunction Indicator Lamp (MIL) is located on the instrument panel. It is displayed as an engine icon (graphic).

OPERATION

As a functional test, the Malfunction Indicator Lamp (MIL) illuminates at key-on before engine cranking. Whenever the Powertrain Control Module (PCM) sets a Diagnostic Trouble Code (DTC) that affects vehicle emissions, it illuminates the MIL. If a problem is detected, the PCM sends a message over the J1850 Bus to the instrument cluster to illuminate the lamp. The PCM illuminates the MIL only for DTC's that affect vehicle emissions. The MIL stays on continuously when the PCM has entered a Limp-In mode or identified a failed emission component or system. The MIL remains on until the DTC is erased. Refer to the Diagnostic Trouble Code charts in this group for emission related codes.

Also, the MIL either flashes or illuminates continuously when the PCM detects active engine misfire. Refer to Misfire Monitoring in this section.

Additionally, the PCM may reset (turn off) the MIL when one of the following occur:

- PCM does not detect the malfunction for 3 consecutive trips (except misfire and fuel system monitors).
- PCM does not detect a malfunction while performing three successive engine misfire or fuel system tests. The PCM performs these tests while the engine is operating within ± 375 RPM of and within 10 % of the load of the operating condition at which the malfunction was first detected.

DRB III STATE DISPLAY TEST MODE

OPERATION

The switch inputs to the Powertrain Control Module (PCM) have two recognized states; HIGH and LOW. For this reason, the PCM cannot recognize the difference between a selected switch position versus an open circuit, a short circuit, or a defective switch. If the State Display screen shows the change from HIGH to LOW or LOW to HIGH, assume the entire switch circuit to the PCM functions properly. From the state display screen, access either State Display Inputs and Outputs or State Display Sensors.

DRB III CIRCUIT ACTUATION TEST MODE

OPERATION

The Circuit Actuation Test Mode checks for proper operation of output circuits or devices the Powertrain Control Module (PCM) may not internally recognize. The PCM attempts to activate these outputs and allow an observer to verify proper operation. Most of the tests provide an audible or visual indication of device operation (click of relay contacts, fuel spray, etc.). Except for intermittent conditions, if a device functions properly during testing, assume the device, its associated wiring, and driver circuit work correctly.

DIAGNOSTIC TROUBLE CODES

DESCRIPTION

A Diagnostic Trouble Code (DTC) indicates the PCM has recognized an abnormal condition in the system.

Remember that DTC's are the results of a system or circuit failure, but do not directly identify the failed component or components.

NOTE: For a list of DTC's, refer to the charts in this section.

OPERATION

BULB CHECK

Each time the ignition key is turned to the ON position, the malfunction indicator (check engine) lamp on the instrument panel should illuminate for approximately 2 seconds then go out. This is done for a bulb check.

DESCRIPTION AND OPERATION (Continued)

OBTAINING DTC'S USING DRB SCAN TOOL

(1) Connect the DRB scan tool to the data link (diagnostic) connector. This connector is located in the passenger compartment; at the lower edge of instrument panel; near the steering column.

(2) Turn the ignition switch on and access the "Read Fault" screen.

(3) Record all the DTC's and "freeze frame" information shown on the DRB scan tool.

(4) To erase DTC's, use the "Erase Trouble Code" data screen on the DRB scan tool. **Do not erase any DTC's until problems have been investigated and repairs have been performed.**

OBTAINING DTC'S USING MIL LAMP

(1) Cycle the ignition key On - Off - On - Off - On within 5 seconds.

(2) The Odometer will show the P-code for the DTC code number. Refer to the Emission section for the DTC chart for a detailed explanation of the DTC codes.

DIAGNOSTIC TROUBLE CODE DESCRIPTIONS

(M) Check Engine Lamp (MIL) will illuminate during engine operation if this Diagnostic Trouble Code was recorded.		
(G) Generator Lamp Illuminated		
GENERIC SCAN TOOL CODE	DRB SCAN TOOL DISPLAY	DESCRIPTION OF DIAGNOSTIC TROUBLE CODE
P0030	1/1 O2 Sensor Heater Relay Malfunction	
P0036	1/2 O2 Sensor Heater Relay Malfunction	
P0106 (M)	Barometric Pressure Out of Range	MAP sensor input voltage out of an acceptable range detected during reading of barometric pressure at key-on.
P0107 (M)	Map Sensor Voltage Too Low	MAP sensor input below minimum acceptable voltage.
P0108 (M)	Map Sensor Voltage Too High	MAP sensor input above maximum acceptable voltage.
P0112 (M)	Intake Air Temp Sensor Voltage Low	Intake air (charge) temperature sensor input below the minimum acceptable voltage.
P0113 (M)	Intake Air Temp Sensor Voltage High	Intake air (charge) temperature sensor input above the maximum acceptable voltage.
P0116	Coolant Temp. Sensor Performance	A rationatilty error has been detected in the coolant temp sensor.
P0117 (M)	ECT Sensor Voltage Too Low	Engine coolant temperature sensor input below the minimum acceptable voltage.
P0118 (M)	ECT Sensor Voltage Too High	Engine coolant temperature sensor input above the maximum acceptable voltage.
P0121 (M)	TPS Voltage Does Not Agree With MAP	TPS signal does not correlate to MAP sensor signal.
P0122 (M)	Throttle Position Sensor Voltage Low	Throttle position sensor input below the acceptable voltage range.
P0123 (M)	Throttle Position Sensor Voltage High	Throttle position sensor input above the maximum acceptable voltage.
P0125 (M)	Closed Loop Temp Not Reached	Time to enter Closed Loop Operation (Fuel Control) is excessive.
P0130	1/1 O2 Sensor Heater Relay Malfunction	
P0131 (M)	1/1 O2 Sensor Shorted To Ground	Oxygen sensor input voltage maintained below normal operating range.

DESCRIPTION AND OPERATION (Continued)

(M) Check Engine Lamp (MIL) will illuminate during engine operation if this Diagnostic Trouble Code was recorded.		
(G) Generator Lamp Illuminated		
GENERIC SCAN TOOL CODE	DRB SCAN TOOL DISPLAY	DESCRIPTION OF DIAGNOSTIC TROUBLE CODE
P0132 (M)	1/1 O2 Sensor Shorted To Voltage	Oxygen sensor input voltage maintained above normal operating range.
P0133 (M)	1/1 O2 Sensor Slow Response	Oxygen sensor response slower than minimum required switching frequency.
P0134 (M)	1/1 O2 Sensor Stays at Center	Neither rich or lean condition is detected from the oxygen sensor input.
P0135 (M)	1/1 O2 Sensor Heater Failure	Oxygen sensor heater element malfunction.
P0136	1/2 O2 Sensor Heater Relay Malfunction	
P0137 (M)	1/2 O2 Sensor Shorted To Ground	Oxygen sensor input voltage maintained below normal operating range.
P0138 (M)	1/2 O2 Sensor Shorted To Voltage	Oxygen sensor input voltage maintained above normal operating range.
P0139 (M)	1/2 O2 Sensor Slow Response	Oxygen sensor response not as expected.
P0140 (M)	1/2 O2 Sensor Stays at Center	Neither rich or lean condition is detected from the oxygen sensor.
P0141 (M)	1/2 O2 Sensor Heater Failure	Oxygen sensor heater element malfunction.
P0143	1/3 O2 Sensor Shorted To Ground	Oxygen sensor input voltage maintained below normal operating range.
P0144	1/3 O2 Sensor Shorted To Voltage	Oxygen sensor input voltage maintained above normal operating range.
P0145	1/3 O2 Sensor Slow Response	Oxygen sensor response slower than minimum required switching frequency.
P0146	1/3 O2 Sensor Stays at Center	Neither rich or lean condition is detected from the oxygen sensor.
P0147	1/3 O2 Sensor Heater Failure	Oxygen sensor heater element malfunction.
P0151 (M)	2/1 O2 Sensor Shorted To Ground	Oxygen sensor input voltage maintained below normal operating range.
P0152 (M)	2/1 O2 Sensor Shorted To Voltage	Oxygen sensor input voltage sustained above normal operating range.
P0153 (M)	2/1 O2 Sensor Slow Response	Oxygen sensor response slower than minimum required switching frequency.
P0154 (M)	2/1 O2 Sensor Stays at Center	Neither rich or lean condition is detected from the oxygen sensor.
P0155 (M)	2/1 O2 Sensor Heater Failure	Oxygen sensor heater element malfunction.
P0157 (M)	2/2 O2 Sensor Shorted To Ground	Oxygen sensor input voltage maintained below normal operating range.
P0158 (M)	2/2 O2 Sensor Shorted To Voltage	Oxygen sensor input voltage maintained above normal operating range.
P0159	2/2 O2 Sensor Slow Response	Oxygen sensor response slower than minimum required switching frequency.

DESCRIPTION AND OPERATION (Continued)

(M) Check Engine Lamp (MIL) will illuminate during engine operation if this Diagnostic Trouble Code was recorded.		
(G) Generator Lamp Illuminated		
GENERIC SCAN TOOL CODE	DRB SCAN TOOL DISPLAY	DESCRIPTION OF DIAGNOSTIC TROUBLE CODE
P0160 (M)	2/2 O2 Sensor Stays at Center	Neither rich or lean condition is detected from the oxygen sensor.
P0161 (M)	2/2 O2 Sensor Heater Failure	Oxygen sensor heater element malfunction.
P0171 (M)	1/1 Fuel System Lean	A lean air/fuel mixture has been indicated by an abnormally rich correction factor.
P0172 (M)	1/1 Fuel System Rich	A rich air/fuel mixture has been indicated by an abnormally lean correction factor.
P0174 (M)	2/1 Fuel System Lean	A lean air/fuel mixture has been indicated by an abnormally rich correction factor.
P0175 (M)	2/1 Fuel System Rich	A rich air/fuel mixture has been indicated by an abnormally lean correction factor.
P0176	Loss of Flex Fuel Calibration Signal	No calibration voltage preasent from flex fuel sensor
P0178	Flex Fuel Sensor Volts Too Low	Flex fuel sensor input below minimum acceptable voltage.
P0179	Flex Fuel Sensor Volts Too High	Flex fuel sensor input above maximum acceptable voltage.
P0182	CNG Temp Sensor Voltage Too Low	Compressed natural gas temperature sensor voltage below acceptable voltage.
P0183	CNG Temp Sensor Voltage Too High	Compressed natural gas temperature sensor voltage above acceptable voltage.
P0201 (M)	Injector #1 Control Circuit	An open or shorted condition detected in control circuit for injector #1 or the INJ 1 injector bank.
P0202 (M)	Injector #2 Control Circuit	An open or shorted condition detected in control circuit for injector #2 or the INJ 2 injector bank.
P0203 (M)	Injector #3 Control Circuit	An open or shorted condition detected in control circuit for injector #3 or the INJ 3 injector bank.
P0204 (M)	Injector #4 Control Circuit	Injector #4 or INJ 4 injector bank output driver stage does not respond properly to the control signal.
P0205 (M)	Injector #5 Control Circuit	Injector #5 output driver stage does not respond properly to the control signal.
P0206 (M)	Injector #6 Control Circuit	Injector #6 output driver stage does not respond properly to the control signal.
P0207	Injector #7 Control Circuit	Injector #7 output driver stage does not respond properly to the control signal.
P0208	Injector #8 Control Circuit	Injector #8 output driver stage does not respond properly to the control signal.
P0209	Injector #9 Control Circuit	Injector #9 output driver stage does not respond properly to the control signal.
P0210	Injector #10 Control Circuit	Injector #10 output driver stage does not respond properly to the control signal.
P0300 (M)	Multiple Cylinder Mis-fire	Misfire detected in multiple cylinders.
P0301 (M)	CYLINDER #1 MISFIRE	Misfire detected in cylinder #1.
P0302 (M)	CYLINDER #2 MISFIRE	Misfire detected in cylinder #2.

DESCRIPTION AND OPERATION (Continued)

(M) Check Engine Lamp (MIL) will illuminate during engine operation if this Diagnostic Trouble Code was recorded.		
(G) Generator Lamp Illuminated		
GENERIC SCAN TOOL CODE	DRB SCAN TOOL DISPLAY	DESCRIPTION OF DIAGNOSTIC TROUBLE CODE
P0303 (M)	CYLINDER #3 MISFIRE	Misfire detected in cylinder #3.
P0304 (M)	CYLINDER #4 MISFIRE	Misfire detected in cylinder #4.
P0305 (M)	CYLINDER #5 MISFIRE	Misfire detected in cylinder #5.
P0306 (M)	CYLINDER #6 MISFIRE	Misfire detected in cylinder #6.
P0307 (M)	CYLINDER #7 MISFIRE	Misfire detected in cylinder #7
P0308 (M)	CYLINDER #8 MISFIRE	Misfire detected in cylinder #8.
P0309 (M)	CYLINDER #9 MISFIRE	Misfire detected in cylinder #9.
P0310 (M)	CYLINDER #10 MISFIRE	Misfire detected in cylinder #10.
P0320	No Crank Referance Signal at PCM	No reference signal (crankshaft position sensor) detected during engine cranking.
P0325	Knock Sensor #1 Circuit	Knock sensor (#1) signal above or below minimum acceptable threshold voltage at particular engine speeds.
P0330	Knock Sensor #2 Circuit	Knock sensor (#2) signal above or below minimum acceptable threshold voltage at particular engine speeds.
P0340 (M)	No Cam Signal At PCM	No fuel sync
P0350	Ignition Coil Draws Too Much Current	A coil (1-5) is drawing too much current.
P0351 (M)	Ignition Coil # 1 Primary Circuit	Peak primary circuit current not achieved with maximum dwell time.
P0352 (M)	Ignition Coil # 2 Primary Circuit	Peak primary circuit current not achieved with maximum dwell time.
P0353 (M)	Ignition Coil # 3 Primary Circuit	Peak primary circuit current not achieved with maximum dwell time.
P0354 (M)	Ignition Coil # 4 Primary Circuit	Peak primary circuit current not achieved with maximum dwell time (High Impedance).
P0355 (M)	Ignition Coil # 5 Primary Circuit	Peak primary circuit current not achieved with maximum dwell time (High Impedance).
P0356 (M)	Ignition Coil # 6 Primary Circuit	Peak primary circuit current not achieved with maximum dwell time (High impedance).
P0357	Ignition Coil # 7 Primary Circuit	Peak primary circuit current not achieved with maximum dwell time (High impedance).
P0358	Ignition Coil # 8 Primary Circuit	Peak primary circuit current not achieved with maximum dwell time (High impedance).
P0401 (M)	EGR System Failure	Required change in air/fuel ration not detected during diagnostic test.
P0403 (M)	EGR Solenoid Circuit	An open or shorted condition detected in the EGR solenoid control circuit.
P0404 (M)	EGR Position Sensor Rationality	EGR position sensor signal does not correlate to EGR duty cycle.
P0405 (M)	EGR Position Sensor Volts Too Low	EGR position sensor input below the acceptable voltage range.

DESCRIPTION AND OPERATION (Continued)

(M) Check Engine Lamp (MIL) will illuminate during engine operation if this Diagnostic Trouble Code was recorded.		
(G) Generator Lamp Illuminated		
GENERIC SCAN TOOL CODE	DRB SCAN TOOL DISPLAY	DESCRIPTION OF DIAGNOSTIC TROUBLE CODE
P0406 (M)	EGR Position Sensor Volts Too High	EGR position sensor input above the acceptable voltage range.
P0412	Secondary Air Solenoid Circuit	An open or shorted condition detected in the secondary air (air switching/aspirator) solenoid control circuit.
P0420 (M)	1/1 Catalytic Converter Efficiency	Catalyst 1/1 efficiency below required level.
P0432 (M)	1/2 Catalytic Converter Efficiency	Catalyst 2/1 efficiency below required level.
P0441 (M)	Evap Purge Flow Monitor	Insufficient or excessive vapor flow detected during evaporative emission system operation.
P0442 (M)	Evap Leak Monitor Medium (0.040) Leak Detected	A small leak has been detected in the evaporative system.
P0443 (M)	Evap Purge Solenoid Circuit	An open or shorted condition detected in the EVAP purge solenoid control circuit.
P0455 (M)	Evap Leak Monitor Large Leak Detected	A large leak has been detected in the evaporative system.
P0456	Evap Leak Monitor Small (0.020) Leak Detected	A small leak has been detected in the evaporative system.
P0460	Fuel Level Unit No Change Over Miles	No movement of fuel level sender detected.
P0461	Fuel Level Unit No Changeover Time	No level of fuel level sender detected.
P0462	Fuel Level Sending Unit Volts Too Low	Fuel level sensor input below acceptable voltage.
P0463	Fuel Level Sending Unit Volts Too High	Fuel level sensor input above acceptable voltage.
P0500 (M)	No Vehicle Speed Sensor Signal	No vehicle speed sensor signal detected during road load conditions.
P0505 (M)	Idle Air Control Motor Circuits	Actual state of AIS motor not equal to desired state.
P0522	Oil Pressure Sens Low	Oil pressure sensor input below acceptable voltage.
P0523	Oil Pressure Sens High	Oil pressure sensor input above acceptable voltage.
P0551 (M)	Power Steering Switch Failure	Incorrect input state detected for the power steering switch circuit. PL: High pressure seen at high speed.
P0600 (M)	PCM Failure SPI Communications	No communication detected between co-processors in the control module.
P0601 (M)	PCM Internal Controller Failure	Internal control module fault condition (check sum) detected.
P0604	RAM Check Failure	Transmission control module RAM self test fault detected. -Aisin transmission.
P0605	ROM Check Failure	Transmission control module ROM self test fault detected -Aisin transmission.
P0615	Starter Relay Control Circuit	An open or shorted condition detected in the starter relay control circuit.
P0622 (G)	Generator Field Not Switching Properly	An open or shorted condition detected in the generator field control circuit.

DESCRIPTION AND OPERATION (Continued)

(M) Check Engine Lamp (MIL) will illuminate during engine operation if this Diagnostic Trouble Code was recorded.		
(G) Generator Lamp Illuminated		
GENERIC SCAN TOOL CODE	DRB SCAN TOOL DISPLAY	DESCRIPTION OF DIAGNOSTIC TROUBLE CODE
P0645	A/C Clutch Relay Circuit	An open or shorted condition detected in the A/C clutch relay control circuit.
P0700 (M)	EATX Controller DTC Present	This SBEC III or JTEC DTC indicates that the EATX or Aisin controller has an active fault and has illuminated the MIL via a J1850 (EATX) or SCI (Aisin) message. The specific fault must be acquired from the EATX via J1850 or from the Aisin via ISO-9141.
P0703 (M)	Brake Switch Sence Circuit	Incorrect input state detected in the brake switch circuit. (Changed from P1595).
P0711	Trans Temp Sensor, No Temp Rise After Start	Relationship between the transmission temperature and overdrive operation and/or TCC operation indicates a failure of the Transmission Temperature Sensor. OBD II Rationality.
P0712	Trans Temp Sensor Voltage Too Low	Transmission fluid temperature sensor input below acceptable voltage.
P0713	Trans Temp Sensor Voltage Too High	Transmission fluid temperature sensor input above acceptable voltage.
P0720	Low Output SPD Sensor RPM, Above 15 MPH	The relationship between the Output Shaft Speed Sensor and vehicle speed is not within acceptable limits.
P0740 (M)	Torq Con Clu, No RPM Drop at Lockup	Relationship between engine and vehicle speeds indicated failure of torque convertor clutch lock-up system (TCC/PTU sol).
P0743	Torque Converter Clutch Solenoid/ Trans Relay Circuits	An open or shorted condition detected in the torque converter clutch (part throttle unlock) solenoid control circuit. Shift solenoid C electrical fault - Aisin transmission
P0748	Governor Pressur Sol Control/Trans Relay Circuits	An open or shorted condition detected in the Governor Pressure Solenoid circuit or Trans Relay Circuit in JTEC RE transmissions.
P0751	O/D Switch Pressed (Lo) More Than 5 Minutes	Overdrive override switch input is in a prolonged depressed state.
P0753	Trans 3-4 Shift Sol/Trans Relay Circuits	An open or shorted condition detected in the overdrive solenoid control circuit or Trans Relay Circuit in JTEC RE transmissions.
P0756	AW4 Shift Sol B (2-3) Functional Failure	Shift solenoid B (2-3) functional fault - Aisin transmission
P0783	3-4 Shift Sol, No RPM Drop at Lockup	The overdrive solenoid is unable to engage the gear change from 3rd gear to the overdrive gear.
P0801	Reverse Gear Lockout Circuit Open or Short	An open or shorted condition detected in the transmission reverse gear lock-out solenoid control circuit.
P0833	Clutch Released Switch Circuit	
P01192	Inlet Air Temp. Sensor Voltage Low	Inlet Air Temp. sensor input below acceptable voltage
P01193	Inlet Air Temp. Voltage High	Inlet Air Temp. sensor input above acceptable voltage.
P1194	O2 Heater Performance	

DESCRIPTION AND OPERATION (Continued)

(M) Check Engine Lamp (MIL) will illuminate during engine operation if this Diagnostic Trouble Code was recorded.		
(G) Generator Lamp Illuminated		
GENERIC SCAN TOOL CODE	DRB SCAN TOOL DISPLAY	DESCRIPTION OF DIAGNOSTIC TROUBLE CODE
P1195 (M)	1/1 O2 Sensor Slow During Catalyst Monitor	A slow switching oxygen sensor has been detected in bank 1/1 during catalyst monitor test. (was P0133)
P1196 (M)	2/1 O2 Sensor Slow During Catalyst Monitor	A slow switching oxygen sensor has been detected in bank 2/1 during catalyst monitor test. (was P0153)
P1197	1/2 O2 Sensor Slow During Catalyst Monitor	A slow switching oxygen sensor has been detected in bank 1/2 during catalyst monitor test. (was P0139)
P1198	Radiator Temperature Sensor Volts Too High	Radiator coolant temperature sensor input above the maximum acceptable voltage.
P1199	Radiator Temperature Sensor Volts Too Low	Radiator coolant temperature sensor input below the minimum acceptable voltage.
P1281	Engine is Cold Too Long	Engine coolant temperature remains below normal operating temperatures during vehicle travel (Thermostat).
P1282	Fuel Pump Relay Control Circuit	An open or shorted condition detected in the fuel pump relay control circuit.
P1288	Intake Manifold Short Runner Solenoid Circuit	An open or shorted condition detected in the short runner tuning valve circuit.
P1289	Manifold Tune Valve Solenoid Circuit	An open or shorted condition detected in the manifold tuning valve solenoid control circuit.
P1290	CNG Fuel System Pressure Too High	Compressed natural gas system pressure above normal operating range.
P1291	No Temp Rise Seen From Intake Heaters	Energizing Heated Air Intake does not change intake air temperature sensor an acceptable amount.
P1292	CNG Pressure Sensor Voltage Too High	Compressed natural gas pressure sensor reading above acceptable voltage.
P1293	CNG Pressure Sensor Voltage Too Low	Compressed natural gas pressure sensor reading below acceptable voltage.
P1294 (M)	Target Idle Not Reached	Target RPM not achieved during drive idle condition. Possible vacuum leak or IAC (AIS) lost steps.
P1295	No 5 Volts to TP Sensor	Loss of a 5 volt feed to the Throttle Position Sensor has been detected.
P1296	No 5 Volts to MAP Sensor	Loss of a 5 volt feed to the MAP Sensor has been detected.
P1297 (M)	No Change in MAP From Start To Run	No difference is recognized between the MAP reading at engine idle and the stored barometric pressure reading.
P1298	Lean Operation at Wide Open Throttle	A prolonged lean condition is detected during Wide Open Throttle.
P1299 (M)	Vacuum Leak Found (IAC Fully Seated)	MAP Sensor signal does not correlate to Throttle Position Sensor signal. Possible vacuum leak.
P1388	Auto Shutdown Relay Control Circuit	An open or shorted condition detected in the ASD or CNG shutoff relay control ckt.
P1389	No ASD Relay Output Voltage At PCM	No Z1 or Z2 voltage sensed when the auto shutdown relay is energized.
P1390 (M)	Timing Belt Skipped 1 Tooth or More	Relationship between Cam and Crank signals not correct.

DESCRIPTION AND OPERATION (Continued)

(M) Check Engine Lamp (MIL) will illuminate during engine operation if this Diagnostic Trouble Code was recorded.		
(G) Generator Lamp Illuminated		
GENERIC SCAN TOOL CODE	DRB SCAN TOOL DISPLAY	DESCRIPTION OF DIAGNOSTIC TROUBLE CODE
P1391 (M)	Intermittent Loss of CMP or CKP	Loss of the Cam Position Sensor or Crank Position sensor has occurred.
P1398 (M)	Mis-Fire Adaptive Numerator at Limit	PCM is unable to learn the Crank Sensor's signal in preparation for Misfire Diagnostics. Probable defective Crank Sensor.
P1399	Wait To Start Lamp Cicuit	An open or shorted condition detected in the Wait to Start Lamp circuit.
P1403	No 5 Volts to EGR Sensor	Loss of 5v feed to the EGR position sensor.
P1476	Too Little Secondary Air	Insufficient flow of secondary air injection detected during aspirator test.(was P0411)
P1477	Too Much Secondary Air	Excessive flow of secondary air injection detected during aspirator test (was P0411).
P1478 (M)	Battery Temp Sensor Volts Out of Limit	Internal temperature sensor input voltage out of an acceptable range.
P1479	Transmission Fan Relay Circuit	An open or shorted condition detected in the transmission fan relay circuit.
P1480	PCV Solenoid Circuit	An open or shorted condition detected in the PCV solenoid circuit.
P1481	EATX Misfire RPM Signal out of Range	EATX RPM pulse generator signal for misfire detection does not correlate with expected value.
P1482	Catalyst Temperature Sensor Circuit Shorted Low	Catalyst temperature sensor circuit shorted low.
P1483	Catalyst Temperature Sensor Circuit Shorted High.	Catalyst temperature sensor circuit shorted high.
P1484	Catalytic Converter Overheat Detected	A catalyst overheat condition has been detected by the catalyst temperature sensor.
P1485	Air Injection Solenoid Circuit	An open or shorted condition detected in the air assist solenoid circuit.
P1486 (M)	Evap Leak Monitor Pinched Hose Found	LDP has detected a pinched hose in the evaporative hose system.
P1487	Hi Speed Rad Fan CTRL Relay Circuit	An open or shorted condition detected in the control circuit of the #2 high speed radiator fan control relay.
P1488	Auxiliary 5 Volt Supply Output Too Low	Auxiliary 5 volt sensor feed is sensed to be below an acceptable limit.
P1489 (M)	High Speed Fan CTRL Relay Circuit	An open or shorted condition detected in the control circuit of the high speed radiator fan control relay.
P1490 (M)	Low Speed Fan CTRL Relay Circuit	An open or shorted condition detected in control circuit of the low speed radiator fan control relay.
P1491	Rad Fan Control Relay Circuit	An open or shorted condition detected in the radiator fan control relay control circuit. This includes PWM solid state relays.
P1492 (M,G)	Ambient/Batt Temp Sen Volts Too High	External temperature sensor input above acceptable voltage.

DESCRIPTION AND OPERATION (Continued)

(M) Check Engine Lamp (MIL) will illuminate during engine operation if this Diagnostic Trouble Code was recorded.		
(G) Generator Lamp Illuminated		
GENERIC SCAN TOOL CODE	DRB SCAN TOOL DISPLAY	DESCRIPTION OF DIAGNOSTIC TROUBLE CODE
P1493 (M,G)	Ambient/Batt Temp Sen Volts Too Low	External temperature sensor input below acceptable voltage.
P1494 (M)	Leak Detection Pump Sw or Mechanical Fault	Incorrect input state detected for the Leak Detection Pump (LDP) pressure switch.
P1495 (M)	Leak Detection Pump Solenoid Circuit	An open or shorted condition detected in the Leak Detection Pump (LDP) solenoid circuit.
P1496 (M)	5 Volt Supply, Output Too Low	5 volt sensor feed is sensed to be below an acceptable limit. (< 4v for 4 sec).
P1498	High Speed Rad Fan Ground CTRL Rly Circuit	An open or shorted condition detected in the control circuit of the #3 high speed radiator fan control relay.
P1594 (G)	Charging System Voltage Too High	Battery voltage sense input above target charging voltage during engine operation.
P1595	Speed Control Solenoid Circuits	An open or shorted condition detected in either of the speed control vacuum or vent solenoid control circuits.
P1596	Speed Control Switch Always High	Speed control switch input above maximum acceptable voltage.
P1597	Speed Control Switch Always Low	Speed control switch input below minimum acceptable voltage.
P1598	A/C Pressure Sensor Volts Too High	A/C pressure sensor input above maximum acceptable voltage.
P1599	A/C Pressure Sensor Volts Too Low	A/C pressure sensor input below minimum acceptable voltage.
P1602	PCM Not Programmed	For generic modules
P1681	No I/P Cluster CCD/J1850 Messages Received	No J1850 messages received from the cluster control module.
P1682 (G)	Charging System Voltage Too Low	Battery voltage sense input below target charging voltage during engine operation and no significant change in voltage detected during active test of generator output circuit.
P1683	SPD CTRL PWR Relay; or S/C 12v Driver CKT	An open or shorted condition detected in the speed control servo power control circuit. (SBECII: ext relay).
P1684	Battery Disconnected in the last 50 Starts	The battery has been disconnected within the last 50 starts.
P1685	Skim Invalid Key	The engine controler has received an invalid key from the SKIM.
P1686	No SKIM BUS Messages Received	No J1850 messages received from the Smart Key Immobilizer Module (SKIM).
P1687	No Cluster BUS Message	No J1850 messages received from the Mechanical Instrument Cluster (MIC) module.
P1693	DTC Detected in Companion Module	A fault has been generated in the companion engine control module.
P1694	No BUS Message Received from Companion Module	No J1850 messages received from the powertrain control module-Aisin transmission.

DESCRIPTION AND OPERATION (Continued)

(M) Check Engine Lamp (MIL) will illuminate during engine operation if this Diagnostic Trouble Code was recorded.		
(G) Generator Lamp Illuminated		
GENERIC SCAN TOOL CODE	DRB SCAN TOOL DISPLAY	DESCRIPTION OF DIAGNOSTIC TROUBLE CODE
P1695	No CCD/J1850 Messages from the Body Control Module.	No J1850 messages received from the body control module.
P1696 (M)	PCM Failure EEPROM Write Denied	Unsuccessful attempt to write to an EEPROM location by the control module.
P1697 (M)	PCM Failure SRI Mile Not Stored	Unsuccessful attempt to update Service Reminder Indicator (SRI or EMR) mileage in the control module EEPROM.
P1698 (M)	No CCD/J1850 Message From TCM	No J1850 messages received from the electronic transmission control module (EATX) or the Aisin transmission controller.
P1719	Skip Shift Solenoid Circuit	An open or shorted condition detected in the transmission 2-3 gear lock-out solenoid control circuit.
P1740	TCC or O/D Solenoid Performance	A rationality error has been detected in either th tcc solenoid or overdrive solenoid systems.
P1756	GOV Press Not Equal to Target @ 15-20 PSI	The requested pressure and the actual pressure are not within a tolerance band for the Governor Control System which is used to regulate governor pressure to control shifts for 1st, 2nd, and 3rd gear. (Mid Pressure Malfunction)
P1757	GOV Press Above 3 PSI in gear with 0 MPH	The requested pressure and the actual pressure are not within a tolerance band for the Governor Control System which is used to regulate governor pressure to control shifts for 1st, 2nd, and 3rd gear (Zero Pressure Malfunction)
P1762	Gov Press Sen Offset Volts Too Lo or High	The Governor Pressure Sensor input is greater than a calibration limit or is less than a calibration limit for 3 consecutive park/neutral calibrations.
P1763	Governor Pressure Sensor Volts Too Hi	The Governor Pressure Sensor input is above an acceptable voltage level.
P1764	Governor Pressure Sensor Volts Too Low	The Governor Pressure Sensor input is below an acceptable voltage level.
P1765	Trans 12 Volt Supply Relay CTRL Circuit	An open or shorted condition is detected in the Transmission Relay control circuit. This relay supplies power to the TCC>
P1899 (M)	P/N Switch Stuck in Park or in Gear	Incorrect input state detected for the Park/Neutral switch.

TASK MANAGER

DESCRIPTION

The PCM is responsible for efficiently coordinating the operation of all the emissions-related components. The PCM is also responsible for determining if the diagnostic systems are operating properly. The software designed to carry out these responsibilities is call the 'Task Manager'.

OPERATION

The Task Manager determines which tests happen when and which functions occur when. Many of the diagnostic steps required by OBD II must be performed under specific operating conditions. The Task Manager software organizes and prioritizes the diagnostic procedures. The job of the Task Manager is to determine if conditions are appropriate for tests to be run, monitor the parameters for a trip for each test,

DESCRIPTION AND OPERATION (Continued)

and record the results of the test. Following are the responsibilities of the Task Manager software:

- Test Sequence
- MIL Illumination
- Diagnostic Trouble Codes (DTCs)
- Trip Indicator
- Freeze Frame Data Storage
- Similar Conditions Window

Test Sequence

In many instances, emissions systems must fail diagnostic tests more than once before the PCM illuminates the MIL. These tests are know as 'two trip monitors.' Other tests that turn the MIL lamp on after a single failure are known as 'one trip monitors.' A trip is defined as 'start the vehicle and operate it to meet the criteria necessary to run the given monitor.'

Many of the diagnostic tests must be performed under certain operating conditions. However, there are times when tests cannot be run because another test is in progress (conflict), another test has failed (pending) or the Task Manager has set a fault that may cause a failure of the test (suspend).

- Pending

Under some situations the Task Manager will not run a monitor if the MIL is illuminated and a fault is stored from another monitor. In these situations, the Task Manager postpones monitors **pending** resolution of the original fault. The Task Manager does not run the test until the problem is remedied.

For example, when the MIL is illuminated for an Oxygen Sensor fault, the Task Manager does not run the Catalyst Monitor until the Oxygen Sensor fault is remedied. Since the Catalyst Monitor is based on signals from the Oxygen Sensor, running the test would produce inaccurate results.

- Conflict

There are situations when the Task Manager does not run a test if another monitor is in progress. In these situations, the effects of another monitor running could result in an erroneous failure. If this **conflict** is present, the monitor is not run until the conflicting condition passes. Most likely the monitor will run later after the conflicting monitor has passed.

For example, if the Fuel System Monitor is in progress, the Task Manager does not run the EGR Monitor. Since both tests monitor changes in air/fuel ratio and adaptive fuel compensation, the monitors will conflict with each other.

- Suspend

Occasionally the Task Manager may not allow a two trip fault to mature. The Task Manager will **suspend** the maturing of a fault if a condition exists that may induce an erroneous failure. This prevents illuminating the MIL for the wrong fault and allows more precis diagnosis.

For example, if the PCM is storing a one trip fault for the Oxygen Sensor and the EGR monitor, the Task Manager may still run the EGR Monitor but will suspend the results until the Oxygen Sensor Monitor either passes or fails. At that point the Task Manager can determine if the EGR system is actually failing or if an Oxygen Sensor is failing.

MIL Illumination

The PCM Task Manager carries out the illumination of the MIL. The Task Manager triggers MIL illumination upon test failure, depending on monitor failure criteria.

The Task Manager Screen shows both a Requested MIL state and an Actual MIL state. When the MIL is illuminated upon completion of a test for a third trip, the Requested MIL state changes to OFF. However, the MIL remains illuminated until the next key cycle. (On some vehicles, the MIL will actually turn OFF during the third key cycle) During the key cycle for the third good trip, the Requested MIL state is OFF, while the Actual MILL state is ON. After the next key cycle, the MIL is not illuminated and both MIL states read OFF.

Diagnostic Trouble Codes (DTCs)

With OBD II, different DTC faults have different priorities according to regulations. As a result, the priorities determine MIL illumination and DTC erasure. DTCs are entered according to individual priority. DTCs with a higher priority overwrite lower priority DTCs.

Priorities

- Priority 0 —Non-emissions related trouble codes
- Priority 1 — One trip failure of a two trip fault for non-fuel system and non-misfire.
- Priority 2 — One trip failure of a two trip fault for fuel system (rich/lean) or misfire.
- Priority 3 — Two trip failure for a non-fuel system and non-misfire or matured one trip comprehensive component fault.
- Priority 4 — Two trip failure or matured fault for fuel system (rich/lean) and misfire or one trip catalyst damaging misfire.

Non-emissions related failures have no priority. One trip failures of two trip faults have low priority. Two trip failures or matured faults have higher priority. One and two trip failures of fuel system and misfire monitor take precedence over non-fuel system and non-misfire failures.

DTC Self Erasure

With one trip components or systems, the MIL is illuminated upon test failure and DTCs are stored.

DESCRIPTION AND OPERATION (Continued)

Two trip monitors are components requiring failure in two consecutive trips for MIL illumination. Upon failure of the first test, the Task Manager enters a maturing code. If the component fails the test for a second time the code matures and a DTC is set.

After three good trips the MIL is extinguished and the Task Manager automatically switches the trip counter to a warm-up cycle counter. DTCs are automatically erased following 40 warm-up cycles if the component does not fail again.

For misfire and fuel system monitors, the component must pass the test under a Similar Conditions Window in order to record a good trip. A Similar Conditions Window is when engine RPM is within ±375 RPM and load is within ±10% of when the fault occurred.

NOTE: It is important to understand that a component does not have to fail under a similar window of operation to mature. It must pass the test under a Similar Conditions Window when it failed to record a Good Trip for DTC erasure for misfire and fuel system monitors.

DTCs can be erased anytime with a DRB III. Erasing the DTC with the DRB III erases all OBD II information. The DRB III automatically displays a warning that erasing the DTC will also erase all OBD II monitor data. This includes all counter information for warm-up cycles, trips and Freeze Frame.

Trip Indicator

The **Trip** is essential for running monitors and extinguishing the MIL. In OBD II terms, a trip is a set of vehicle operating conditions that must be met for a specific monitor to run. All trips begin with a key cycle.

Good Trip

The Good Trip counters are as follows:

- Global Good Trip
- Fuel System Good Trip
- Misfire Good Trip
- Alternate Good Trip (appears as a Global Good Trip on DRB III)
- Comprehensive Components
- Major Monitor
- Warm-Up Cycles

Global Good Trip

To increment a Global Good Trip, the Oxygen sensor and Catalyst efficiency monitors must have run and passed.

Fuel System Good Trip

To count a good trip (three required) and turn off the MIL, the following conditions must occur:

- Engine in closed loop
- Operating in Similar Conditions Window
- Short Term multiplied by Long Term less than threshold
- Less than threshold for a predetermined time

If all of the previous criteria are met, the PCM will count a good trip (three required) and turn off the MIL.

Misfire Good Trip

If the following conditions are met the PCM will count one good trip (three required) in order to turn off the MIL:

- Operating in Similar Condition Window
- 1000 engine revolutions with no misfire

Alternate Good Trip

Alternate Good Trips are used in place of Global Good Trips for Comprehensive Components and Major Monitors. If the Task Manager cannot run a Global Good Trip because a component fault is stopping the monitor from running, it will attempt to count an Alternate Good Trip.

The Task Manager counts an Alternate Good Trip for Comprehensive components when the following conditions are met:

- Two minutes of engine run time
- No other faults occur

The Task Manager counts an Alternate Good Trip for a Major Monitor when the monitor runs and passes. Only the Major Monitor that failed needs to pass to count an Alternate Good Trip.

Warm-Up Cycles

Once the MIL has been extinguished by the Good Trip Counter, the PCM automatically switches to a Warm-Up Cycle Counter that can be viewed on the DRB III. Warm-Up Cycles are used to erase DTCs and Freeze Frames. Forty Warm-Up cycles must occur in order for the PCM to self-erase a DTC and Freeze Frame. A Warm-Up Cycle is defined as follows:

- Engine coolant temperature must start below and rise above 160° F
- Engine coolant temperature must rise by 40° F
- No further faults occur

Freeze Frame Data Storage

Once a failure occurs, the Task Manager records several engine operating conditions and stores it in a Freeze Frame. The Freeze Frame is considered one frame of information taken by an on-board data recorder. When a fault occurs, the PCM stores the input data from various sensors so that technicians can determine under what vehicle operating conditions the failure occurred.

The data stored in Freeze Frame is usually recorded when a system fails the first time for two trip faults. Freeze Frame data will only be overwritten by a different fault with a higher priority.

DESCRIPTION AND OPERATION (Continued)

CAUTION: Erasing DTCs, either with the DRB III or by disconnecting the battery, also clears all Freeze Frame data.

Similar Conditions Window

The Similar Conditions Window displays information about engine operation during a monitor. Absolute MAP (engine load) and Engine RPM are stored in this window when a failure occurs. There are two different Similar conditions Windows: Fuel System and Misfire.

FUEL SYSTEM

- **Fuel System Similar Conditions Window** — An indicator that 'Absolute MAP When Fuel Sys Fail' and 'RPM When Fuel Sys Failed' are all in the same range when the failure occurred. Indicated by switching from 'NO' to 'YES'.
- **Absolute MAP When Fuel Sys Fail** — The stored MAP reading at the time of failure. Informs the user at what engine load the failure occurred.
- **Absolute MAP** — A live reading of engine load to aid the user in accessing the Similar Conditions Window.
- **RPM When Fuel Sys Fail** — The stored RPM reading at the time of failure. Informs the user at what engine RPM the failure occurred.
- **Engine RPM** — A live reading of engine RPM to aid the user in accessing the Similar Conditions Window.
- **Adaptive Memory Factor** — The PCM utilizes both Short Term Compensation and Long Term Adaptive to calculate the Adaptive Memory Factor for total fuel correction.
- **Upstream O2S Volts** — A live reading of the Oxygen Sensor to indicate its performance. For example, stuck lean, stuck rich, etc.
- **SCW Time in Window (Similar Conditions Window Time in Window)** — A timer used by the PCM that indicates that, after all Similar Conditions have been met, if there has been enough good engine running time in the SCW without failure detected. This timer is used to increment a Good Trip.
- **Fuel System Good Trip Counter** — A Trip Counter used to turn OFF the MIL for Fuel System DTCs. To increment a Fuel System Good Trip, the engine must be in the Similar Conditions Window, Adaptive Memory Factor must be less than calibrated threshold and the Adaptive Memory Factor must stay below that threshold for a calibrated amount of time.
- **Test Done This Trip** — Indicates that the monitor has already been run and completed during the current trip.

MISFIRE

- **Same Misfire Warm-Up State** — Indicates if the misfire occurred when the engine was warmed up (above 160° F).
- **In Similar Misfire Window** — An indicator that 'Absolute MAP When Misfire Occurred' and 'RPM When Misfire Occurred' are all in the same range when the failure occurred. Indicated by switching from 'NO' to 'YES'.
- **Absolute MAP When Misfire Occurred** — The stored MAP reading at the time of failure. Informs the user at what engine load the failure occurred.
- **Absolute MAP** — A live reading of engine load to aid the user in accessing the Similar Conditions Window.
- **RPM When Misfire Occurred** — The stored RPM reading at the time of failure. Informs the user at what engine RPM the failure occurred.
- **Engine RPM** — A live reading of engine RPM to aid the user in accessing the Similar Conditions Window.
- **Adaptive Memory Factor** — The PCM utilizes both Short Term Compensation and Long Term Adaptive to calculate the Adaptive Memory Factor for total fuel correction.
- **200 Rev Counter** — Counts 0–100 720 degree cycles.
- **SCW Cat 200 Rev Counter** — Counts when in similar conditions.
- **SCW FTP 1000 Rev Counter** — Counts 0–4 when in similar conditions.
- **Misfire Good Trip Counter** — Counts up to three to turn OFF the MIL.

MONITORED SYSTEMS

DESCRIPTION

There are new electronic circuit monitors that check fuel, emission, engine and ignition performance. These monitors use information from various sensor circuits to indicate the overall operation of the fuel, engine, ignition and emission systems and thus the emissions performance of the vehicle.

The fuel, engine, ignition and emission systems monitors do not indicate a specific component problem. They do indicate that there is an implied problem within one of the systems and that a specific problem must be diagnosed.

If any of these monitors detect a problem affecting vehicle emissions, the Malfunction Indicator (Check Engine) Lamp will be illuminated. These monitors generate Diagnostic Trouble Codes that can be displayed with the check engine lamp or a scan tool.

The following is a list of the monitored systems:

- EGR Monitor
- Misfire Monitor

DESCRIPTION AND OPERATION (Continued)

- Fuel System Monitor
- Evaporative Emissions Monitor

Following is a description of each system monitor, and its DTC.

Refer to the appropriate Powertrain Diagnostics Procedures manual for diagnostic procedures.

EGR MONITOR

The Powertrain Control Module (PCM) performs an on-board diagnostic check of the EGR system.

The EGR system consists of two main components: a vacuum solenoid back pressure transducer and a vacuum operated valve. The EGR monitor is used to test whether the EGR system is operating within specifications. The diagnostic check activates only during selected engine/driving conditions. When the conditions are met, the EGR is turned off (solenoid energized) and the O2S compensation control is monitored. Turning off the EGR shifts the air fuel (A/F) ratio in the lean direction. Oxygen sensor voltage then indicates increased oxygen in the exhaust. Consequently, Short Term Compensation shifts to rich (increased injector pulse width). By monitoring the shift, the PCM can indirectly monitor the EGR system. While this test does not directly measure the operation of the EGR system, it can be inferred from the shift in the O2S data whether the EGR system is operating correctly. Because the O2S is being used, the O2S test must pass its test before the EGR test.

Enabling Conditions—

- Engine Temperature
- Engine Run Time
- Engine RPM
- MAP Sensor
- TPS
- Vehicle Speed
- Short Term Compensation

Pending Conditions— The EGR Monitor does not run when any of the following example faults have illuminated the MIL:

- Misfire
- Oxygen Sensor Monitor
- Oxygen Sensor Heater Monitor
- Fuel System Rich/Lean
- Limp in for MAP, TPS or ECT
- Vehicle Speed Sensor
- Cam or Crank Sensor
- EGR Electrical
- EVAP Electrical
- Fuel Injector
- Ignition Coil
- Idle Speed
- Engine Coolant Temperature (ECT)
- MAP Sensor
- Intake Air Temperature (IAT)

Conflict Conditions— The EGR Monitor typically does not run if any of the following conditions are present:

- Fuel System Monitor
- Purge Monitor
- Catalyst Monitor
- Low Fuel Level
- High Altitude
- Low Ambient Air Temperature

The EGR Monitor does not run if any of the following example DTCs are present:

- Misfire Monitor, Priority 2
- Upstream Oxygen Sensor Heater, Priority 1
- Fuel System Monitor, Priority 2
- Oxygen Sensor Monitor, Priority 1

MISFIRE MONITOR

Excessive engine misfire results in increased catalyst temperature and causes an increase in HC emissions. Severe misfires could cause catalyst damage. To prevent catalytic convertor damage, the PCM monitors engine misfire.

The Powertrain Control Module (PCM) monitors for misfire during most engine operating conditions (positive torque) by looking at changes in the crankshaft speed. If a misfire occurs the speed of the crankshaft will vary more than normal.

OBD II regulations for misfire monitoring require two different tests for misfire. The first is a Catalyst Damage level of misfire test. The second is for emissions greater than 1.5 times the Federal Tailpipe (FTP) standards. The tests are monitored by two different counters. These counters are:

- 200 revolution increments for immediate catalyst damage
- 1000 revolution increments for emissions violation and Inspection/Maintenance (I/M) test failure

NOTE: The percent of misfire for malfunction criteria varies due to RPM and load. As the engine speed increases or load decreases, the effects of a misfire diminishes due to crankshaft momentum. Failure percentages also vary from engine to engine.

Monitor Operation— The PCM utilizes the Crankshaft Speed Fluctuation method to monitor for misfire. The misfire monitor utilizes a crankshaft position sensor to determine engine RPM. The sensor can detect slight variations in engine speed due to misfire. Misfire is continuously monitored once the enabling conditions are met.

Once enabling conditions are met, the PCM counts the number of misfires in every 200 revolutions of the crankshaft. If, during **five** 200 counters, the misfire percentage exceeds a predetermined value, a maturing code is set and a Freeze Frame is entered.

DESCRIPTION AND OPERATION (Continued)

Freeze Frame data is recorded during the last 200 revolutions of the 1000 revolution period. A failure on the second consecutive trip matures the code and a DTC is set.

If misfire continues during the initial trip, the MIL is not illuminated. However, the MIL flashes when the misfire percentage exceeds the malfunction percentage, in any 200 revolution period, that would cause permanent catalyst damage. This is a one trip monitor. If misfire reaches a point in which catalyst damage is likely to occur, the MIL flashes and a DTC is stored in a Freeze Frame. The engine defaults to open loop operation to prevent increased fuel flow to the cylinders. Once misfire is below the predetermined percentage, the MIL stops flashing but remains illuminated.

The 1000 revolution counters are two trip monitors. As with the fuel system monitor, Freeze Frame data is from the original fault, and MIL extinguishing requires the monitor to pass under similar conditions.

The Adaptive Numerator— The Misfire Monitor takes into account component wear, sensor fatigue and machining tolerances. The PCM compares the crankshaft in the vehicle to data on an ideal crank and uses this as a basis to determine variance. To do this, the crankshaft sensor monitors the reference notches in the crank. The PCM uses the first signal set as a point of reference. It then measures where the second set of signals is, compared to where engineering data has determined it should be. This variance is the Adaptive Numerator. The monitor will not run if the numerator is not set.

If the Adaptive Numerator is equal to the default value, the adaptive Numerator has not been learned and the Misfire Monitor does not run. If the Adaptive Numerator exceeds its limits, the PCM sets a DTC for Adaptive Numerator and illuminates the MIL.

RPM Error— The PCM also checks the machining tolerances for each group of slots. By monitoring the speed of the crank from the first slot to the last slot in a group, the PCM can calculate engine RPM. The variance between groups of slots is know as the RPM error. In order for the PCM to run the Misfire Monitor, RPM error must be less than approximately 5%.

Enabling Conditions— The following conditions must be met before the PCM runs the Misfire Monitor:

- RPM
- Engine Coolant Temperature (ECT)
- Barometric Pressure (MAP)
- Fuel level
- Ambient air Temperature

Pending Conditions— The Misfire Monitor does not run when the MIL is illuminated for any of the following:

- Limp in mode for
— MAP
— TPS
— Crankshaft Sensor
— Engine Coolant Temperature Sensor
- Speed Sensor DTC
- EGR Electrical
- EVAP Electrical
- Idle Speed Faults
- Intake Air Temperature
- Oxygen Sensor Monitor
- Oxygen Sensor Electrical

Conflict Conditions— If any of the following conditions conflict with the Misfire Monitor, the monitor will not run:

- Low fuel level
- MAP voltage rapidly changing
- Severe engine decel
- TPS toggling OPEN/CLOSED
- Engine RPM too low (RPM levels by vehicle)
- Engine RPM too high (RPM levels vary by vehicle)
- Full Lean or Decel Fuel Shut-off
- Cold start

FUEL SYSTEM MONITOR

To comply with clean air regulations, vehicles are equipped with catalytic converters. These converters reduce the emission of hydrocarbons, oxides of nitrogen and carbon monoxide. The catalyst works best when the air fuel (A/F) ratio is at or near the optimum of 14.7 to 1.

The PCM is programmed to maintain the optimum air/fuel ratio of 14.7 to 1. This is done by making short term corrections in the fuel injector pulse width based on the O2S output. The programmed memory acts as a self calibration tool that the engine controller uses to compensate for variations in engine specifications, sensor tolerances and engine fatigue over the life span of the engine. By monitoring the actual air-fuel ratio with the O2S (short term) and multiplying that with the program long-term (adaptive) memory and comparing that to the limit, it can be determined whether it will pass an emissions test. If a malfunction occurs such that the PCM cannot maintain the optimum A/F ratio, then the MIL will be illuminated.

Monitor Operation— Fuel systems monitors do not have a pre-test because they are continuously running monitors. Therefore, the PCM constantly monitors Short Term Compensation and Long Term Adaptive memory.

Lean: If at anytime during a lean engine operation, short term compensation multiplied by long term adaptive exceeds a certain percentage for an

DESCRIPTION AND OPERATION (Continued)

extended period, the PCM sets a Fuel System Lean Fault for that trip and a Freeze Frame is entered.

Rich: If at anytime during a rich operation, Short Term Compensation multiplied by Long Term Adaptive is less than a predetermined value, the PCM checks the Purge Free Cells.

Purge Free Cells are values placed in Adaptive Memory cells when the EVAP Purge Solenoid is OFF. Two, three or four Purge Free cells are used. One corresponds to an Adaptive Memory cell at idle, the other to a cell that is off-idle. For example, if a Purge Free cell is labeled PFC1, it would hold the value for Adaptive Memory cell C1 under non-purge conditions.

If all Purge Free Cells are less than a certain percentage, and the Adaptive Memory factor is less than a certain percentage, the PCM sets a Fuel System Rich fault for that trip and a Freeze Frame is entered.

The Fuel Monitor is a two trip monitor. The PCM records engine data in Freeze Frame upon setting of the first fault, or maturing code. When the fuel monitor fails on a second consecutive trip, the code is matured and the MIL is illuminated. The stored Freeze Frame data is still from the first fault.

In order for the PCM to extinguish the MIL, the Fuel Monitor must pass in a Similar Condition Window. The similar conditions relate to RPM and load. The engine must be within a predetermined percentage of both RPM and load when the monitor runs to count a good trip. As with all DTCs, three good trips are required to extinguish the MIL and 40 warm up cycles are required to erase the DTC. If the engine does not run in a Similar Conditions Window, the Task Manager extinguishes the MIL after 80 good trips.

Enabling Conditions— The following conditions must be met to operate the fuel control monitor:

- PCM not in fuel crank mode (engine running)
- PCM in Closed Loop fuel control
- Fuel system updating Long Term Adaptive
- Fuel level above 15% of capacity
- Fuel level below 85% of capacity

Pending Conditions— The Fuel Control Monitor does not operate if the MIL is illuminated for any of the following:

- Misfire Monitor
- Upstream O2S
- EVAP Purge Solenoid Electrical PCM Self Test Fault
- Camshaft or Crankshaft Position Sensor
- Fuel Injectors
- Ignition Coil Primary
- Throttle Position (TPS) Sensor
- Engine Coolant Temperature (ECT) Sensor
- Manifold Absolute Pressure (MAP) Sensor
- Idle Air Control (IAC)
- 5V Output Too Low
- EGR Monitor
- EGR Solenoid Circuit
- Vehicle Speed Sensor
- Oxygen Sensor Monitor
- Oxygen Sensor Heater Monitor
- Oxygen Sensor Electrical
- Idle Speed Rationality
- Intake Air Temperature

Suspend— The Task Manager will suspend maturing a Fuel System fault if any of the following are present:

- Oxygen Sensor Response, Priority 1
- O2 Heater, Priority 1
- Misfire Monitor, Priority 2

EVAPORATIVE EMISSIONS MONITOR

LEAK DETECTION PUMP MONITOR— The leak detection assembly incorporates two primary functions: it must detect a leak in the evaporative system and seal the evaporative system so the leak detection test can be run.

The primary components within the assembly are: A three port solenoid that activates both of the functions listed above; a pump which contains a switch, two check valves and a spring/diaphragm, a canister vent valve (CVV) seal which contains a spring loaded vent seal valve.

Immediately after a cold start, between predetermined temperature thresholds limits, the three port solenoid is briefly energized. This initializes the pump by drawing air into the pump cavity and also closes the vent seal. During non test conditions the vent seal is held open by the pump diaphragm assembly which pushes it open at the full travel position. The vent seal will remain closed while the pump is cycling due to the reed switch triggering of the three port solenoid that prevents the diaphragm assembly from reaching full travel. After the brief initialization period, the solenoid is de-energized allowing atmospheric pressure to enter the pump cavity, thus permitting the spring to drive the diaphragm which forces air out of the pump cavity and into the vent system. When the solenoid is energized and de energized, the cycle is repeated creating flow in typical diaphragm pump fashion. The pump is controlled in 2 modes:

Pump Mode: The pump is cycled at a fixed rate to achieve a rapid pressure build in order to shorten the overall test length.

Test Mode: The solenoid is energized with a fixed duration pulse. Subsequent fixed pulses occur when the diaphragm reaches the Switch closure point.

The spring in the pump is set so that the system will achieve an equalized pressure of about 7.5” H20.

DESCRIPTION AND OPERATION (Continued)

The cycle rate of pump strokes is quite rapid as the system begins to pump up to this pressure. As the pressure increases, the cycle rate starts to drop off. If there is no leak in the system, the pump would eventually stop pumping at the equalized pressure. If there is a leak, it will continue to pump at a rate representative of the flow characteristic of the size of the leak. From this information we can determine if the leak is larger than the required detection limit (currently set at.040" orifice by CARB). If a leak is revealed during the leak test portion of the test, the test is terminated at the end of the test mode and no further system checks will be performed.

After passing the leak detection phase of the test, system pressure is maintained by turning on the LDP's solenoid until the purge system is activated. Purge activation in effect creates a leak. The cycle rate is again interrogated and when it increases due to the flow through the purge system, the leak check portion of the diagnostic is complete.

The canister vent valve will unseal the system after completion of the test sequence as the pump diaphragm assembly moves to the full travel position.

Evaporative system functionality will be verified by using the stricter evap purge flow monitor. At an appropriate warm idle the LDP will be energized to seal the canister vent. The purge flow will be clocked up from some small value in an attempt to see a shift in the 02 control system. If fuel vapor, indicated by a shift in the 02 control, is present the test is passed. If not, it is assumed that the purge system is not functioning in some respect. The LDP is again turned off and the test is ended.

Enabling Conditions for Systems with LDP

- Ambient Air Temperature
- Barometric Pressure
- Fuel level
- Engine Temperature
- No stalling
- Battery voltage

NON-LDP VEHICLES— On a vehicle without an EVAP leak detection pump system, changes in short term memory and movement in target IAC at idle or idle speed change, are used to monitor the system. There are two stages for this test.

Stage One— Stage one is a non-intrusive test. The PCM compares adaptive memory values between purge and purge-free cells. The PCM uses these values to determine the amount of fuel vapors entering the system. If the difference between the cells exceeds a predetermined value, the test passes. If not, then the monitor advances to state two.

Stage Two— Once the enabling conditions are met, the PCM de-energizes the Duty Cycle Purge (DCP) solenoid. The PCM then waits until engine RPM, Short Term Compensation and Idle Air Control have all stabilized. Once stable, the PCM increments the DCP solenoid cycle rate approximately 6% every 8 engine revolutions. If during the test any one of three conditions occur before the DCP cycle reaches 100%, the EVAP system is considered to be operational and the test passes. These conditions are as follows:

- RPM rises by a predetermined amount
- Short Term drops by a predetermined amount
- Idle Air Control closes by a predetermined amount

When none of the previous conditions occur, the test fails and the PCM increments a counter by one. When the PCM runs the test three times during a trip, and the counter has been incremented to three, the monitor fails and a Freeze Frame is stored.

Enabling Conditions (Stage Two)— The following conditions must be met to enable the EVAP Monitor (without LDP)

- Ambient Air Temperature
- Barometric Pressure
- Fuel level
- Engine Temperature
- Engine run time
- RPM stable
- MAP
- Generator, radiator fans, A/C clutch

Pending Conditions-With or Without LDP— The EVAP Monitor is suspended and does not run, when the MIL is illuminated due to any of the following faults:

- Misfire
- Oxygen Sensor Monitor
- Fuel System Rich
- Fuel System Lean
- EGR Monitor
- MAP
- TPS
- ECT
- DCP Solenoid

Conflict Conditions-With or Without LDP— The EVAP Monitor does not run if any of the following tests are in progress:

- Catalyst
- EGR
- Fuel System
- Misfire

TRIP DEFINITION

OPERATION

A "Trip" means vehicle operation (following an engine-off period) of duration and driving mode such that all components and systems are monitored at least once by the diagnostic system. The monitors must successfully pass before the PCM can verify

that a previously malfunctioning component is meeting the normal operating conditions of that component. For misfire or fuel system malfunction, the MIL may be extinguished if the fault does not recur when monitored during three subsequent sequential driving cycles in which conditions are similar to those under which the malfunction was first determined.

Anytime the MIL is illuminated, a DTC is stored. The DTC can self erase only when the MIL has been extinguished. Once the MIL is extinguished, the PCM must pass the diagnostic test for the most recent DTC for 40 warm-up cycles (80 warm-up cycles for the Fuel System Monitor and the Misfire Monitor). A warm-up cycle can best be described by the following:

- The engine must be running
- A rise of 40°F in engine temperature must occur from the time when the engine was started
- Engine coolant temperature must reach at least 160°F
- A "driving cycle" that consists of engine start up and engine shut off.

Once the above conditions occur, the PCM is considered to have passed a warm-up cycle. Due to the conditions required to extinguish the MIL and erase the DTC, it is most important that after a repair has been made, all DTC's be erased and the repair verified.

MONITORED COMPONENT

DESCRIPTION

There are several components that will affect vehicle emissions if they malfunction. If one of these components malfunctions the Malfunction Indicator Lamp (Check Engine) will illuminate.

Some of the component monitors are checking for proper operation of the part. Electrically operated components now have input (rationality) and output (functionality) checks. Previously, a component like the Throttle Position sensor (TPS) was checked by the PCM for an open or shorted circuit. If one of these conditions occurred, a DTC was set. Now there is a check to ensure that the component is working. This is done by watching for a TPS indication of a greater or lesser throttle opening than MAP and engine rpm indicate. In the case of the TPS, if engine vacuum is high and engine rpm is 1600 or greater and the TPS indicates a large throttle opening, a DTC will be set. The same applies to low vacuum and 1600 rpm.

Any component that has an associated limp in will set a fault after 1 trip with the malfunction present.

Refer to the Diagnostic Trouble Codes Description Charts in this section and the appropriate Powertrain Diagnostic Procedure Manual for diagnostic procedures.

The following is a list of the monitored components:

- Comprehensive Components
- Oxygen Sensor Monitor
- Oxygen Sensor Heater Monitor
- Catalyst Monitor

COMPREHENSIVE COMPONENTS

Along with the major monitors, OBD II requires that the diagnostic system monitor any component that could affect emissions levels. In many cases, these components were being tested under OBD I. The OBD I requirements focused mainly on testing emissions-related components for electrical opens and shorts.

However, OBD II also requires that inputs from powertrain components to the PCM be tested for **rationality**, and that outputs to powertrain components from the PCM be tested for **functionality**. Methods for monitoring the various Comprehensive Component monitoring include:

(1) Circuit Continuity
- Open
- Shorted high
- Shorted to ground

(2) Rationality or Proper Functioning
- Inputs tested for rationality
- Outputs tested for functionality

NOTE: Comprehensive component monitors are continuous. Therefore, enabling conditions do not apply.

Input Rationality— While input signals to the PCM are constantly being monitored for electrical opens and shorts, they are also tested for rationality. This means that the input signal is compared against other inputs and information to see if it makes sense under the current conditions.

PCM sensor inputs that are checked for rationality include:

- Manifold Absolute Pressure (MAP) Sensor
- Oxygen Sensor (O2S)
- Engine Coolant Temperature (ECT) Sensor
- Camshaft Position (CMP) Sensor
- Vehicle Speed Sensor
- Crankshaft Position (CKP) Sensor
- Intake Air Temperature (IAT) Sensor
- Throttle Position (TPS) Sensor
- Ambient/Battery Temperature Sensors
- Power Steering Switch
- Oxygen Sensor Heater
- Engine Controller
- Brake Switch
- Leak Detection Pump Switch

DESCRIPTION AND OPERATION (Continued)

- P/N Switch
- Trans Controls

Output Functionality— PCM outputs are tested for functionality in addition to testing for opens and shorts. When the PCM provides a voltage to an output component, it can verify that the command was carried out by monitoring specific input signals for expected changes. For example, when the PCM commands the Idle Air Control (IAC) Motor to a specific position under certain operating conditions, it expects to see a specific (target) idle speed (RPM). If it does not, it stores a DTC.

PCM outputs monitored for functionality include:

- Fuel Injectors
- Ignition Coils
- Torque Converter Clutch Solenoid
- Idle Air Control
- Purge Solenoid
- EGR Solenoid
- LDP Solenoid
- Radiator Fan Control
- Trans Controls

OXYGEN SENSOR (O2S) MONITOR

DESCRIPTION— Effective control of exhaust emissions is achieved by an oxygen feedback system. The most important element of the feedback system is the O2S. The O2S is located in the exhaust path. Once it reaches operating temperature 300° to 350°C (572° to 662°F), the sensor generates a voltage that is inversely proportional to the amount of oxygen in the exhaust. When there is a large amount of oxygen in the exhaust caused by a lean condition, the sensor produces a low voltage, below 450 mV. When the oxygen content is lower, caused by a rich condition, the sensor produces a higher voltage, above 450mV.

The information obtained by the sensor is used to calculate the fuel injector pulse width. This maintains a 14.7 to 1 air fuel (A/F) ratio. At this mixture ratio, the catalyst works best to remove hydrocarbons (HC), carbon monoxide (CO) and nitrous oxide (NOx) from the exhaust.

The O2S is also the main sensing element for the EGR, Catalyst and Fuel Monitors.

The O2S may fail in any or all of the following manners:

- Slow response rate (Big Slope)
- Reduced output voltage (Half Cycle)
- Heater Performance

Slow Response Rate (Big Slope)— Response rate is the time required for the sensor to switch from lean to rich signal output once it is exposed to a richer than optimum A/F mixture or vice versa. As the PCM adjusts the air/fuel ratio, the sensor must be able to rapidly detect the change. As the sensor ages, it could take longer to detect the changes in the oxygen content of the exhaust gas. The rate of change that an oxygen sensor experiences is called 'Big Slope'. The PCM checks the oxygen sensor voltage in increments of a few milliseconds.

Reduced Output Voltage (Half Cycle)— The output voltage of the O2S ranges from 0 to 1 volt. A good sensor can easily generate any output voltage in this range as it is exposed to different concentrations of oxygen. To detect a shift in the A/F mixture (lean or rich), the output voltage has to change beyond a threshold value. A malfunctioning sensor could have difficulty changing beyond the threshold value. Each time the voltage signal surpasses the threshold, a counter is incremented by one. This is called the Half Cycle Counter.

Heater Performance— The heater is tested by a separate monitor. Refer to the Oxygen Sensor Heater Monitor.

OPERATION— As the Oxygen Sensor signal switches, the PCM monitors the half cycle and big slope signals from the oxygen sensor. If during the test neither counter reaches a predetermined value, a malfunction is entered and a Freeze Frame is stored. Only one counter reaching its predetermined value is needed for the monitor to pass.

The Oxygen Sensor Monitor is a two trip monitor that is tested only once per trip. When the Oxygen Sensor fails the test in two consecutive trips, the MIL is illuminated and a DTC is set. The MIL is extinguished when the Oxygen Sensor monitor passes in three consecutive trips. The DTC is erased from memory after 40 consecutive warm-up cycles without test failure.

Enabling Conditions— The following conditions must typically be met for the PCM to run the oxygen sensor monitor:

- Battery voltage
- Engine temperature
- Engine run time
- Engine run time at a predetermined speed
- Engine run time at a predetermined speed and throttle opening
- Transmission in gear (automatic only)
- Fuel system in Closed Loop
- Long Term Adaptive (within parameters)
- Power Steering Switch in low PSI (no load)
- Engine at idle
- Fuel level above 15%
- Ambient air temperature
- Barometric pressure
- Engine RPM within acceptable range of desired idle
- Closed throttle speed

Pending Conditions— The Task Manager typically does not run the Oxygen Sensor Monitor if over-

DESCRIPTION AND OPERATION (Continued)

lapping monitors are running or the MIL is illuminated for any of the following:

- Misfire Monitor
- Front Oxygen Sensor and Heater Monitor
- MAP Sensor
- Vehicle Speed Sensor
- Engine Coolant Temperature Sensor
- Throttle Position Sensor
- Engine Controller Self Test Faults
- Cam or Crank Sensor
- Injector and Coil
- Idle Air Control Motor
- EVAP Electrical
- EGR Solenoid Electrical
- Intake Air Temperature
- 5 Volt Feed

Conflict— The Task Manager does not run the Oxygen Sensor Monitor if any of the following conditions are present:

- A/C ON (A/C clutch cycling temporarily suspends monitor)
- Purge flow in progress

Suspend— The Task Manager suspends maturing a fault for the Oxygen Sensor Monitor if an of the following are present:

- Oxygen Sensor Heater Monitor, Priority 1
- Misfire Monitor, Priority 2

OXYGEN SENSOR HEATER MONITOR

DESCRIPTION— If there is an oxygen sensor (O2S) DTC as well as a O2S heater DTC, the O2S fault MUST be repaired first. After the O2S fault is repaired, verify that the heater circuit is operating correctly.

The voltage readings taken from the O2S are very temperature sensitive. The readings are not accurate below 300°C. Heating of the O2S is done to allow the engine controller to shift to closed loop control as soon as possible. The heating element used to heat the O2S must be tested to ensure that it is heating the sensor properly.

The heater element itself is not tested. The sensor output is used to test the heater by isolating the effect of the heater element on the O2S output voltage from the other effects. The resistance is normally between 100 ohms and 4.5 megaohms. When oxygen sensor temperature increases, the resistance in the internal circuit decreases. The PCM sends a 5 volts biased signal through the oxygen sensors to ground this monitoring circuit. As the temperature increases, resistance decreases and the PCM detects a lower voltage at the reference signal. Inversely, as the temperature decreases, the resistance increases and the PCM detects a higher voltage at the reference signal. an The O2S circuit is monitored for a drop in voltage.

OPERATION— The Oxygen Sensor Heater Monitor begins after the ignition has been turned OFF and the O2 sensors have cooled. The PCM sends a 5 volt bias to the oxygen sensor every 1.6 seconds. The PCM keeps it biased for 35 ms each time. As the sensor cools down, the resistance increases and the PCM reads the increase in voltage. Once voltage has increased to a predetermined amount, higher than when the test started, the oxygen sensor is cool enough to test heater operation.

When the oxygen sensor is cool enough, the PCM energizes the ASD relay. Voltage to the O2 sensor begins to increase the temperature. As the sensor temperature increases, the internal resistance decreases. The PCM continues biasing the 5 volt signal to the sensor. Each time the signal is biased, the PCM reads a voltage decrease. When the PCM detects a voltage decrease of a predetermined value for several biased pulses, the test passes.

The heater elements are tested each time the engine is turned OFF if all the enabling conditions are met. If the monitor fails, the PCM stores a maturing fault and a Freeze Frame is entered. If two consecutive tests fail, a DTC is stored. Because the ignition is OFF, the MIL is illuminated at the beginning of the next key cycle.

Enabling Conditions— The following conditions must be met for the PCM to run the oxygen sensor heater test:

- Engine run time of at least 5.1 minutes
- Key OFF power down
- Battery voltage of at least 10 volts
- Sufficient Oxygen Sensor cool down

Pending Conditions— There are not conditions or situations that prompt conflict or suspension of testing. The oxygen sensor heater test is not run pending resolution of MIL illumination due to oxygen sensor failure.

Suspend— There are no conditions which exist for suspending the Heater Monitor.

CATALYST MONITOR

To comply with clean air regulations, vehicles are equipped with catalytic converters. These converters reduce the emission of hydrocarbons, oxides of nitrogen and carbon monoxide.

Normal vehicle miles or engine misfire can cause a catalyst to decay. A meltdown of the ceramic core can cause a reduction of the exhaust passage. This can increase vehicle emissions and deteriorate engine performance, driveability and fuel economy.

The catalyst monitor uses dual oxygen sensors (O2S's) to monitor the efficiency of the converter. The dual O2S strategy is based on the fact that as a catalyst deteriorates, its oxygen storage capacity and its efficiency are both reduced. By monitoring the oxy-

DESCRIPTION AND OPERATION (Continued)

gen storage capacity of a catalyst, its efficiency can be indirectly calculated. The upstream O2S is used to detect the amount of oxygen in the exhaust gas before the gas enters the catalytic converter. The PCM calculates the A/F mixture from the output of the O2S. A low voltage indicates high oxygen content (lean mixture). A high voltage indicates a low content of oxygen (rich mixture).

When the upstream O2S detects a lean condition, there is an abundance of oxygen in the exhaust gas. A functioning converter would store this oxygen so it can use it for the oxidation of HC and CO. As the converter absorbs the oxygen, there will be a lack of oxygen downstream of the converter. The output of the downstream O2S will indicate limited activity in this condition.

As the converter loses the ability to store oxygen, the condition can be detected from the behavior of the downstream O2S. When the efficiency drops, no chemical reaction takes place. This means the concentration of oxygen will be the same downstream as upstream. The output voltage of the downstream O2S copies the voltage of the upstream sensor. The only difference is a time lag (seen by the PCM) between the switching of the O2S's.

To monitor the system, the number of lean-to-rich switches of upstream and downstream O2S's is counted. The ratio of downstream switches to upstream switches is used to determine whether the catalyst is operating properly. An effective catalyst will have fewer downstream switches than it has upstream switches i.e., a ratio closer to zero. For a totally ineffective catalyst, this ratio will be one-to-one, indicating that no oxidation occurs in the device.

The system must be monitored so that when catalyst efficiency deteriorates and exhaust emissions increase to over the legal limit, the MIL (check engine lamp) will be illuminated.

Monitor Operation— To monitor catalyst efficiency, the PCM expands the rich and lean switch points of the heated oxygen sensor. With extended switch points, the air/fuel mixture runs richer and leaner to overburden the catalytic converter. Once the test is started, the air/fuel mixture runs rich and lean and the O2 switches are counted. A switch is counted when an oxygen sensor signal goes from below the lean threshold to above the rich threshold. The number of Rear O2 sensor switches is divided by the number of Front O2 sensor switches to determine the switching ratio.

The test runs for 20 seconds. As catalyst efficiency deteriorated over the life of the vehicle, the switch rate at the downstream sensor approaches that of the upstream sensor. If at any point during the test period the switch ratio reaches a predetermined value, a counter is incremented by one. The monitor is enabled to run another test during that trip. When the test fails three times, the counter increments to three, a malfunction is entered, and a Freeze Frame is stored. When the counter increments to three during the next trip, the code is matured and the MIL is illuminated. If the test passes the first, no further testing is conducted during that trip.

The MIL is extinguished after three consecutive good trips. The good trip criteria for the catalyst monitor is more stringent than the failure criteria. In order to pass the test and increment one good trip, the downstream sensor switch rate must be less than 80% of the upstream rate (60% for manual transmissions). The failure percentages are 90% and 70% respectively.

Enabling Conditions— The following conditions must typically be met before the PCM runs the catalyst monitor. Specific times for each parameter may be different from engine to engine.

- Accumulated drive time
- Enable time
- Ambient air temperature
- Barometric pressure
- Catalyst warm-up counter
- Engine coolant temperature
- Accumulated throttle position sensor
- Vehicle speed
- MAP
- RPM
- Engine in closed loop
- Fuel level

Pending Conditions—

- Misfire DTC
- Front Oxygen Sensor Response
- Front Oxygen Sensor Heater Monitor
- Front Oxygen Sensor Electrical
- Rear Oxygen Sensor Rationality (middle check)
- Rear Oxygen Sensor Heater Monitor
- Rear Oxygen Sensor Electrical
- Fuel System Monitor
- All TPS faults
- All MAP faults
- All ECT sensor faults
- Purge flow solenoid functionality
- Purge flow solenoid electrical
- All PCM self test faults
- All CMP and CKP sensor faults
- All injector and ignition electrical faults
- Idle Air Control (IAC) motor functionality
- Vehicle Speed Sensor
- Brake switch
- Inlet/Intake air temperature

Conflict— The catalyst monitor does not run if any of the following are conditions are present:

- EGR Monitor in progress
- Fuel system rich intrusive test in progress

DESCRIPTION AND OPERATION (Continued)

- EVAP Monitor in progress
- Time since start is less than 60 seconds
- Low fuel level
- Low ambient air temperature

Suspend— The Task Manager does not mature a catalyst fault if any of the following are present:

- Oxygen Sensor Monitor, Priority 1
- Upstream Oxygen Sensor Heater, Priority 1
- EGR Monitor, Priority 1
- EVAP Monitor, Priority 1
- Fuel System Monitor, Priority 2
- Misfire Monitor, Priority 2

NON-MONITORED CIRCUITS

OPERATION

The PCM does not monitor all circuits, systems and conditions that could have malfunctions causing driveability problems. However, problems with these systems may cause the PCM to store diagnostic trouble codes for other systems or components. For example, a fuel pressure problem will not register a fault directly, but could cause a rich/lean condition or misfire. This could cause the PCM to store an oxygen sensor or misfire diagnostic trouble code.

The major non-monitored circuits are listed below along with examples of failures modes that do not directly cause the PCM to set a DTC, but for a system that is monitored.

FUEL PRESSURE

The fuel pressure regulator controls fuel system pressure. The PCM cannot detect a clogged fuel pump inlet filter, clogged in-line fuel filter, or a pinched fuel supply or return line. However, these could result in a rich or lean condition causing the PCM to store an oxygen sensor or fuel system diagnostic trouble code.

SECONDARY IGNITION CIRCUIT

The PCM cannot detect an inoperative ignition coil, fouled or worn spark plugs, ignition cross firing, or open spark plug cables.

CYLINDER COMPRESSION

The PCM cannot detect uneven, low, or high engine cylinder compression.

EXHAUST SYSTEM

The PCM cannot detect a plugged, restricted or leaking exhaust system. It may set a EGR or Fuel system fault or O2S.

FUEL INJECTOR MECHANICAL MALFUNCTIONS

The PCM cannot determine if a fuel injector is clogged, the needle is sticking or if the wrong injector is installed. However, these could result in a rich or lean condition causing the PCM to store a diagnostic trouble code for either misfire, an oxygen sensor, or the fuel system.

EXCESSIVE OIL CONSUMPTION

Although the PCM monitors engine exhaust oxygen content when the system is in closed loop, it cannot determine excessive oil consumption.

THROTTLE BODY AIR FLOW

The PCM cannot detect a clogged or restricted air cleaner inlet or filter element.

VACUUM ASSIST

The PCM cannot detect leaks or restrictions in the vacuum circuits of vacuum assisted engine control system devices. However, these could cause the PCM to store a MAP sensor diagnostic trouble code and cause a high idle condition.

PCM SYSTEM GROUND

The PCM cannot determine a poor system ground. However, one or more diagnostic trouble codes may be generated as a result of this condition. The module should be mounted to the body at all times, also during diagnostic.

PCM CONNECTOR ENGAGEMENT

The PCM may not be able to determine spread or damaged connector pins. However, it might store diagnostic trouble codes as a result of spread connector pins.

HIGH AND LOW LIMITS

OPERATION

The PCM compares input signal voltages from each input device with established high and low limits for the device. If the input voltage is not within limits and other criteria are met, the PCM stores a diagnostic trouble code in memory. Other diagnostic trouble code criteria might include engine RPM limits or input voltages from other sensors or switches that must be present before verifying a diagnostic trouble code condition.

SPECIFICATIONS

LOAD VALUE

ENGINE	IDLE/NEUTRAL	2500 RPM/NEUTRAL
2.4L DOHC	2% to 8% of Maximum Load	7% to 15% of Maximum Load

EVAPORATIVE EMISSION CONTROLS

TABLE OF CONTENTS

	page
DESCRIPTION AND OPERATION	
EVAPORATION CONTROL SYSTEM	26
EVAP CANISTER	26
PROPORTIONAL PURGE SOLENOID	26
LEAK DETECTION PUMP	26
LEAK DETECTION PUMP PRESSURE SWITCH	28
POSITIVE CRANKCASE VENTILATION (PCV) SYSTEMS	29
POSITIVE CRANKCASE VENTILATION VALVE	29
CRANKCASE VENT FILTER	30
VEHICLE EMISSION CONTROL INFORMATION LABEL	30
REMOVAL AND INSTALLATION	
LEAK DETECTION PUMP	30
LEAK DETECTION PUMP FILTER	31
EVAP CANISTER	32
PROPORTIONAL PURGE SOLENOID	33
PCV VALVE	34

DESCRIPTION AND OPERATION

EVAPORATION CONTROL SYSTEM

OPERATION

The evaporation control system prevents the emission of fuel tank vapors into the atmosphere. When fuel evaporates in the fuel tank, the vapors pass through vent hoses or tubes to an activated carbon filled evaporative canister. The canister temporarily holds the vapors. The Powertrain Control Module (PCM) allows intake manifold vacuum to draw vapors into the combustion chambers during certain operating conditions (Fig. 1).

All engines use a proportional purge solenoid system. The PCM controls vapor flow by operating the purge solenoid. Refer to Proportional Purge Solenoid in this section.

NOTE: The evaporative system uses specially manufactured hoses. If they need replacement, only use fuel resistant hose. Also the hoses must be able to pass an Ozone compliance test.

NOTE: For more information on Onboard Refueling Vapor Recovery (ORVR), refer to the Fuel Delivery section.

EVAP CANISTER

DESCRIPTION

The canister mounts to a bracket on top of the fuel tank in the rear of the vehicle (Fig. 2). The vacuum and vapor tube connect to the top of the canister.

OPERATION

All vehicles use a sealed, maintenance free, evaporative (EVAP) canister. Fuel tank pressure vents into the canister. The canister temporarily holds the fuel vapors until intake manifold vacuum draws them into the combustion chamber. The Powertrain Control Module (PCM) purges the canister through the proportional purge solenoid. The PCM purges the canister at predetermined intervals and engine conditions.

PROPORTIONAL PURGE SOLENOID

DESCRIPTION

OPERATION

All vehicles use a proportional purge solenoid. The solenoid regulates the rate of vapor flow from the EVAP canister to the throttle body. The PCM operates the solenoid.

During the cold start warm-up period and the hot start time delay, the PCM does not energize the solenoid. When de-energized, no vapors are purged.

The proportional purge solenoid operates at a frequency of 200 hz and is controlled by an engine controller circuit that senses the current being applied to the proportional purge solenoid and then adjusts that current to achieve the desired purge flow. The proportional purge solenoid controls the purge rate of fuel vapors from the vapor canister and fuel tank to the engine intake manifold.

LEAK DETECTION PUMP

DESCRIPTION

The leak detection pump is a device used to detect a leak in the evaporative system.

DESCRIPTION AND OPERATION (Continued)

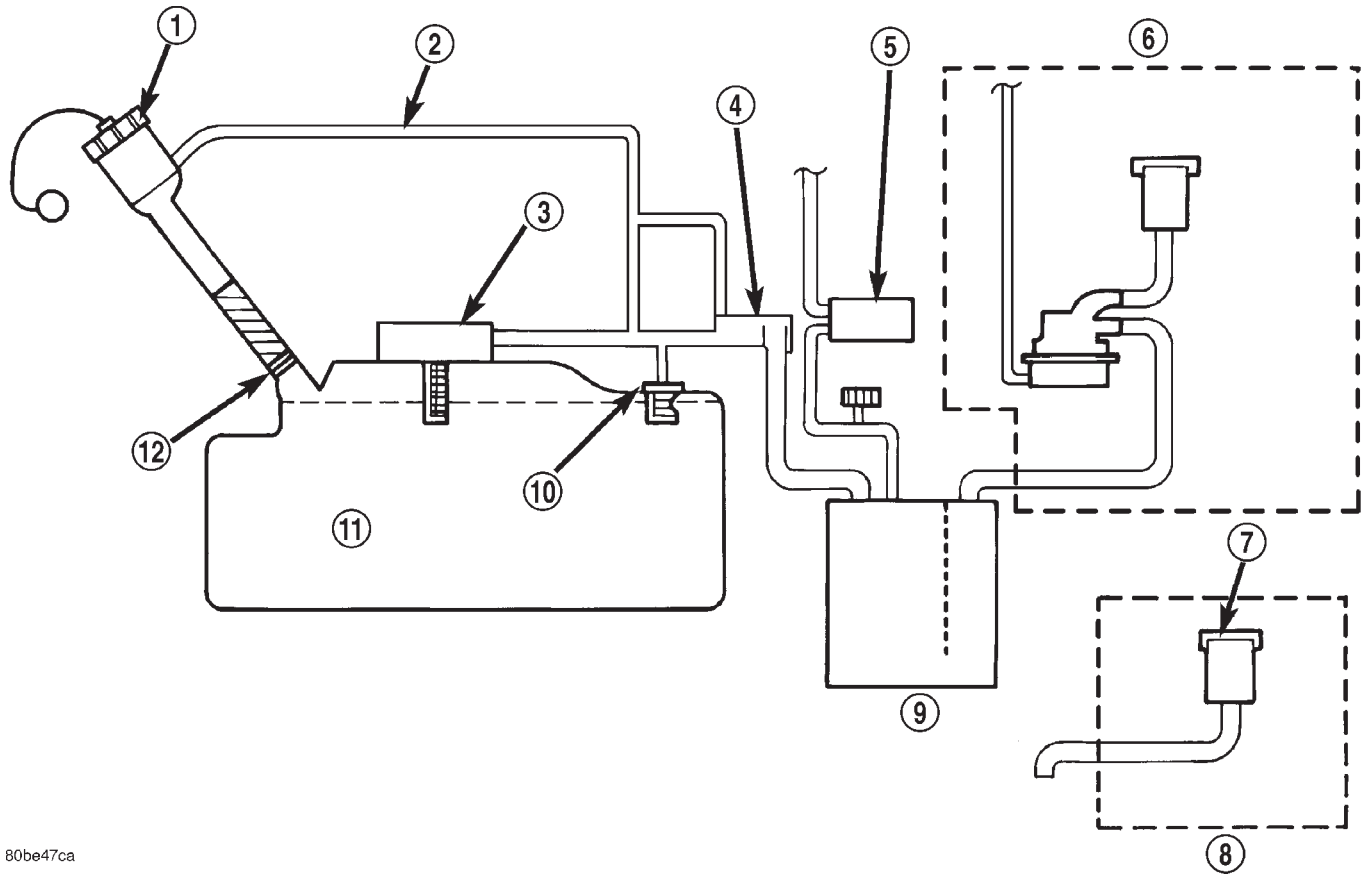

Fig. 1 ORVR System Schematic

1 – FUEL CAP
2 – RECIRCULATION TUBE
3 – CONTROL VALVE
4 – FLOW MANAGEMENT VALVE
5 – PURGE
6 – W/LDP
7 – BREATHER ELEMENT
8 – W/O LDP
9 – CANISTER
10 – ROLLOVER VALVE
11 – FUEL TANK
12 – CHECK VALVE

The pump contains a 3 port solenoid, a pump that contains a switch, a spring loaded canister vent valve seal, 2 check valves and a spring/diaphragm.

OPERATION

Immediately after a cold start, when the engine temperature is between 40°F and 86°F, the 3 port solenoid is briefly energized. This initializes the pump by drawing air into the pump cavity and also closes the vent seal. During non-test test conditions, the vent seal is held open by the pump diaphragm assembly which pushes it open at the full travel position. The vent seal will remain closed while the pump is cycling. This is due to the operation of the 3 port solenoid which prevents the diaphragm assembly from reaching full travel. After the brief initialization period, the solenoid is de-energized, allowing atmospheric pressure to enter the pump cavity. This permits the spring to drive the diaphragm which forces air out of the pump cavity and into the vent system. When the solenoid is energized and de-energized, the cycle is repeated creating flow in typical diaphragm pump fashion. The pump is controlled in 2 modes:

PUMP MODE: The pump is cycled at a fixed rate to achieve a rapid pressure build in order to shorten the overall test time.

TEST MODE: The solenoid is energized with a fixed duration pulse. Subsequent fixed pulses occur when the diaphragm reaches the switch closure point.

The spring in the pump is set so that the system will achieve an equalized pressure of about 7.5 inches of water.

When the pump starts, the cycle rate is quite high. As the system becomes pressurized, pump rate drops. If there is no leak, the pump will quit. If there is a

DESCRIPTION AND OPERATION (Continued)

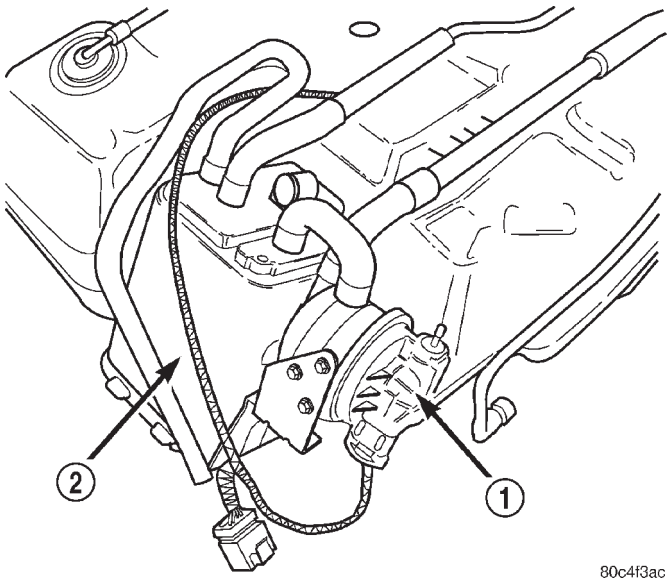

Fig. 2 EVAP Canister

1 – LDP
2 – EVAP CANISTOR

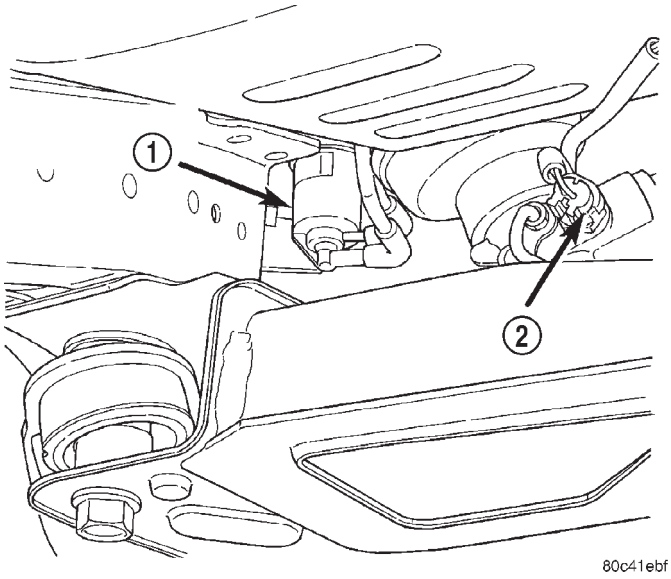

Fig. 3 Proportional Purge Solenoid

1 – EVAP PURGE SOLENOID
2 – POWER STEERING SWITCH

leak, the test is terminated at the end of the test mode.

If there is no leak, the purge monitor is run. If the cycle rate increases due to the flow through the purge system, the test is passed and the diagnostic is complete.

The canister vent valve will unseal the system after completion of the test sequence as the pump diaphragm assembly moves to the full travel position.

LEAK DETECTION PUMP PRESSURE SWITCH

DESCRIPTION

The primary components within the leak detection pump assembly are: a three-port leak detection solenoid valve, a pump assembly that includes a spring loaded diaphragm, a reed switch which is used to monitor the pump diaphragm movement (position), two check valves, and a spring loaded vent seal valve.

OPERATION

The leak detection pump LDP assembly incorporates two primary functions: it detects a leak in the evaporative system, and it seals the evaporative system so that the required leak detection monitor test can be run.

The three-port LDP solenoid valve is used to expose either engine vacuum or atmospheric pressure to the top side of the leak detection pump diaphragm.

When the LDP solenoid valve is deenergized its port (opening) to engine vacuum is blocked off. This allows ambient air (atmospheric pressure) to enter the top of the pump diaphragm. The spring load on the diaphragm will push the diaphragm down, as long as there is no pressure present in the rest of the evaporative system. If there is sufficient evaporative system pressure present, then the pump diaphragm will stay in the “up” position. If the evaporative system pressure decays, then the pump diaphragm will eventually fall. The rate of this decent is dependent upon the size of the evaporative system leak (Large or small).

When the LDP solenoid valve is energized the port (opening) to atmosphere is blocked off. At the same time, the port to engine vacuum is opened. Engine vacuum replaces atmospheric pressure. When engine vacuum is sufficient, it over comes the spring pressure load on the pump diaphragm and causes the diaphragm to rise to its “up” position. The reed switch will change state depending upon the position of the pump diaphragm.

If the diaphragm is in the “up” position the reed switch will be in its “open” state. This means that the signal to the PCM is interrupted. If the pump diaphragm is in the “down” position the reed switch will be in its “closed” state and a signal is sent to the PCM.

The check valves are one-way valves. The first check valve is used to draw outside air into the lower chamber of the LDP (the space that is below the pump diaphragm). The second check valve is used to vent this outside air, which has become pressurized from the fall of the pump diaphragm, into the evaporative system.

DESCRIPTION AND OPERATION (Continued)

The spring loaded vent seal valve, inside the LDP is used to seal off the evaporative system. When the pump diaphragm is in the “up” position the spring pushes the vent seal valve closed. The vent seal valve opens only when the pump diaphragm is in its “full down” position. When the pump assembly is in its pump mode the pump diaphragm is not allowed to descend (fall) so far as to allow the vent seal valve to open. This allows the leak detection pump to develop the required pressure within the evaporative system for system leak testing.

A pressure build up within the evaporative system may cause pressure on the lower side of the LDP diaphragm. This will cause the LDP diaphragm to remain in its “up” position (stuck in the up position). This condition can occur even when the solenoid valve is deenergized. This condition can be caused by previous cycling (pumping) of the LDP by the technician (dealer test). Another way that this condition is created is immediately following the running of the vehicle evaporative system monitor. In this case, the PCM has not yet opened the proportional purge solenoid in order to vent the pressure that has been built up in the evaporative system to the engine combustion system. The technician will need to vent the evaporative system pressure via the vehicle fuel filler cap and its fuel filler secondary seal (if so equipped in the fuel filler neck). This will allow the technician to cycle the LDP and to watch switch state changes.

After passing the leak detection phase of the test, system pressure is maintained until the purge system is activated, in effect creating a leak. If the diaphragm falls (as is expected), causing the reed switch to change state, then the diagnostic test is completed.

When of the evaporative system leak monitor begins its various tests, a test is performed to determine that no part of the evaporative system is blocked. In this test, the LDP is cycled (pumped) a calibrated (few) number of times. Pressure should not build up in the evaporative system. If pressure is present, then LDP diaphragm is forced to stay in its “up” position. The reed switch now stays open and the PCM senses this open (incorrect) state. The evaporative system monitor will fail the test because of a detected obstruction within the system.

Possible causes:

- Open or shorted LDP switch sense circuit
- Leak Detection Pump switch failure
- Open fused ignition switch output
- Restricted, disconnected, or blocked manifold vacuum source
- Obstruction of hoses or lines
- PCM failure

POSITIVE CRANKCASE VENTILATION (PCV) SYSTEMS

DESCRIPTION

It threads into the valve cover.

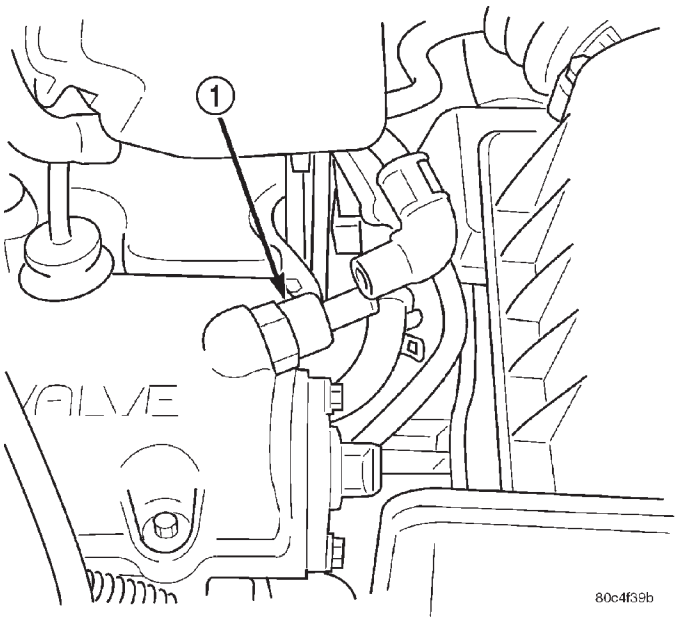

Fig. 4 PCV System—2.4L

1 – PCV VALVE

OPERATION

Intake manifold vacuum removes crankcase vapors and piston blow-by from the engine. The emissions pass through the PCV valve into the intake manifold where they become part of the calibrated air-fuel mixture. They are burned and expelled with the exhaust gases. The air cleaner supplies make up air when the engine does not have enough vapor or blow-by gases. In this system, fresh air does not enter the crankcase.

POSITIVE CRANKCASE VENTILATION VALVE

OPERATION

The PCV valve contains a spring loaded plunger. The plunger meters the amount of crankcase vapors routed into the combustion chamber based on intake manifold vacuum.

When the engine is not operating or during an engine backfire, the spring forces the plunger back against the seat. This prevents vapors from flowing through the valve (Fig. 5).

When the engine is at idle or cruising, high manifold vacuum is present. At these times manifold vacuum is able to completely compress the spring and pull the plunger to the top of the valve (Fig. 6). In

DESCRIPTION AND OPERATION (Continued)

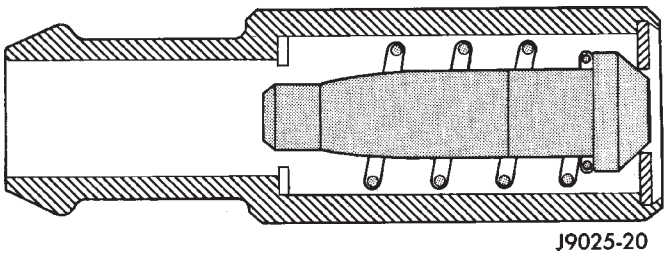

Fig. 5 Engine Off or Engine Backfire—No Vapor Flow

this position there is minimal vapor flow through the valve.

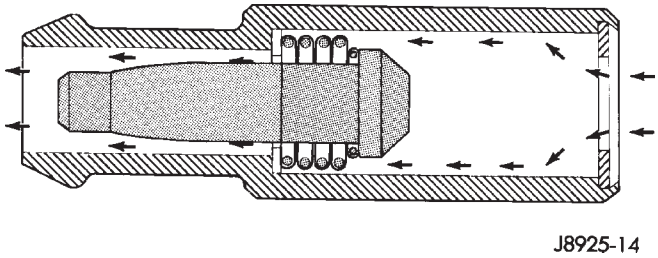

Fig. 6 High Intake Manifold Vacuum—Minimal Vapor Flow

During periods of moderate intake manifold vacuum the plunger is only pulled part way back from the inlet. This results in maximum vapor flow through the valve (Fig. 7).

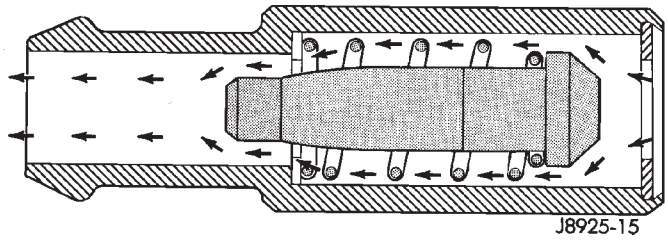

Fig. 7 Moderate Intake Manifold Vacuum—Maximum Vapor Flow

CRANKCASE VENT FILTER

OPERATION

All engines use filtered air to vent the crankcase. The filtered air is drawn through the resonator assembly located between the air cleaner and throttle body.

VEHICLE EMISSION CONTROL INFORMATION LABEL

DESCRIPTION

All models have a Vehicle Emission Control Information (VECI) Label. Chrysler permanently attaches the label in the engine compartment. It cannot be removed without defacing information and destroying the label.

The label contains the vehicle's emission specifications and vacuum hose routings. All hoses must be connected and routed according to the label.

REMOVAL AND INSTALLATION

LEAK DETECTION PUMP

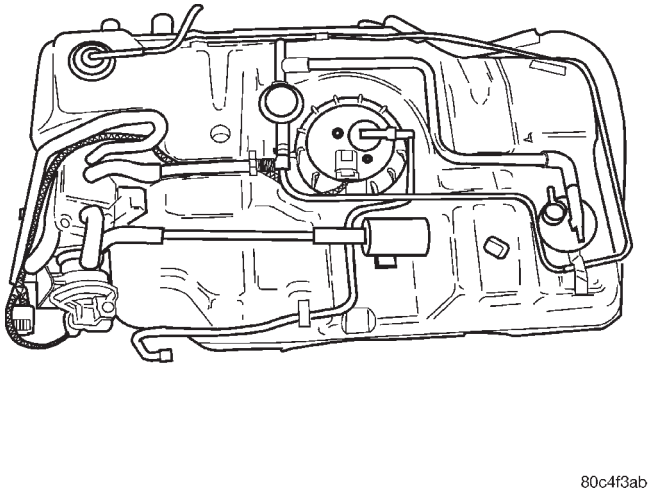

Fig. 8 Fuel Tank Assembly

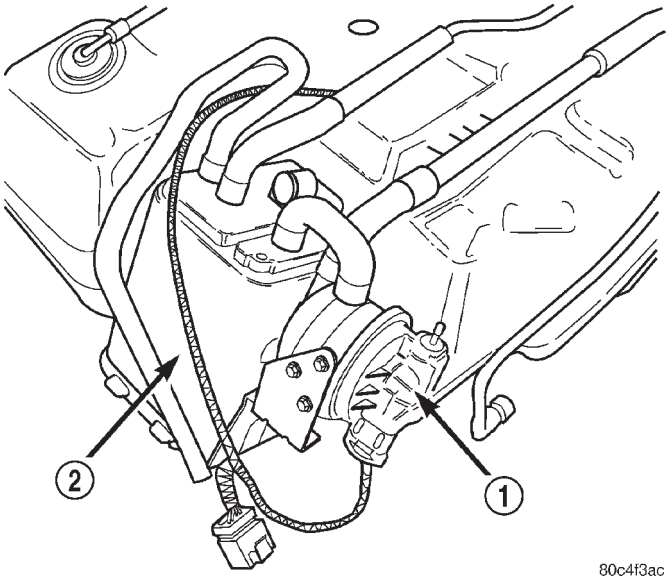

Fig. 9 EVAP System

1 – LDP
2 – EVAP CANISTOR

REMOVAL

(1) Release fuel pressure, Refer to Fuel System Pressure Release Procedure in the Fuel Delivery section.

REMOVAL AND INSTALLATION (Continued)

(2) Remove the air cleaner lid, disconnect the inlet air temperature sensor and makeup air hose.
(3) Remove the negative battery cable.
(4) Raise vehicle and support.
(5) Drain fuel tank, refer to Draining Fuel Tank in the Fuel Delivery section (Fig. 10).

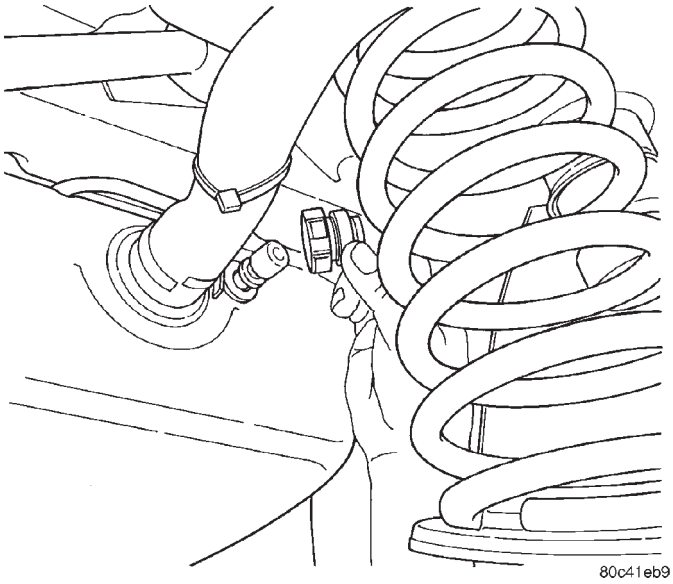

Fig. 10 Fuel Tank Drain

(6) Remove fuel tank and EVAP system, refer to the Fuel Tank removal/installation section in the Fuel Delivery section.
(7) Remove the 3 mounting screws (Fig. 11).

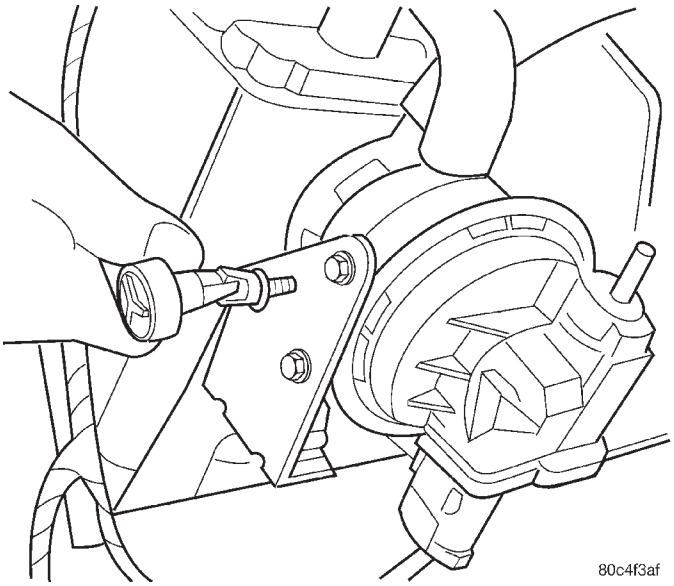

Fig. 11 LDP

(8) Remove LDP from bracket.
(9) Remove hoses from EVAP canister.
(10) Disconnect electrical connector for Leak Detection Pump (LDP).

INSTALLATION

(1) Connect electrical connector to the Leak Detection Pump (LDP).
(2) Install hoses and lines.
(3) Install LDP onto bracket (Fig. 11) and tighten to 3.9 N·m (35 ins.lbs.).
(4) Install the fuel tank and EVAP system, refer to the Fuel Tank removal/installation section in the Fuel Delivery section.
(5) Lower vehicle.
(6) Install the negative battery cable.
(7) Install the air cleaner lid, connect the inlet air temperature sensor and makeup air hose.
(8) Fill fuel tank. Use the DRB scan tool to pressurize the fuel system. Check for leaks.

LEAK DETECTION PUMP FILTER

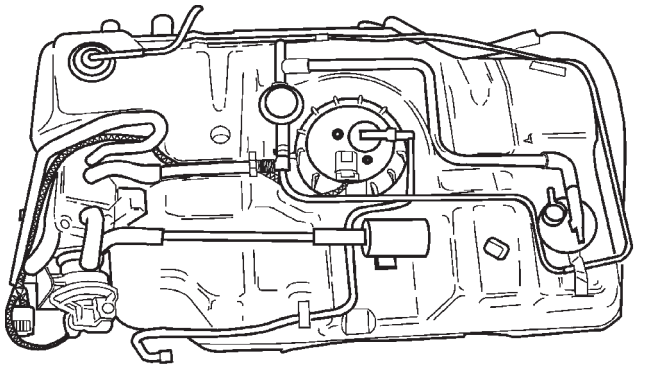

Fig. 12 Fuel Tank Assembly

REMOVAL

(1) Remove the air cleaner lid, disconnect the inlet air temperature sensor and makeup air hose.
(2) Remove the negative battery cable.
(3) Raise vehicle and support.
(4) Lower the fuel tank and EVAP system, refer to the Fuel Tank removal/installation section in the Fuel Delivery section (Fig. 14).
(5) Remove the mounting screw from the LDP filter (Fig. 15).
(6) Disconnect the LDP filter hose.
(7) Remove LDP filter from fuel tank.

INSTALLATION

(1) Install hose to the LDP filter.
(2) Install LDP filter onto fuel tank (Fig. 15) and tighten to 3.9 N·m (35 ins.lbs.).
(3) Install the fuel tank and EVAP system, refer to the Fuel Tank removal/installation section in the Fuel Delivery section.
(4) Lower vehicle.

REMOVAL AND INSTALLATION (Continued)

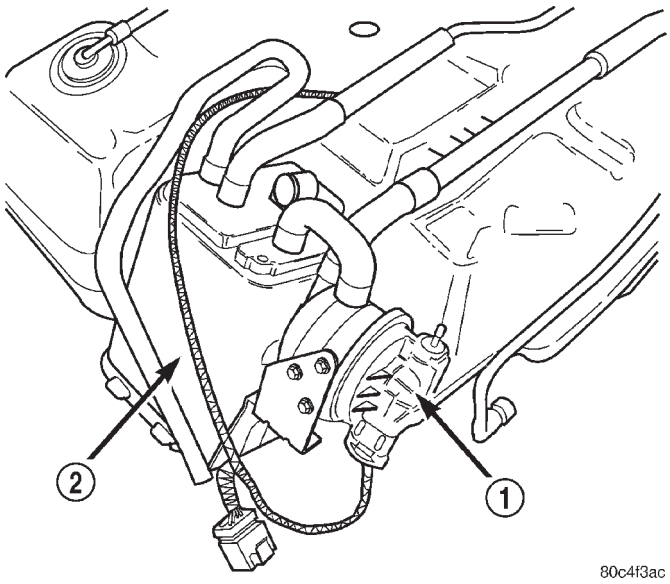

Fig. 13 EVAP System

1 – LDP
2 – EVAP CANISTOR

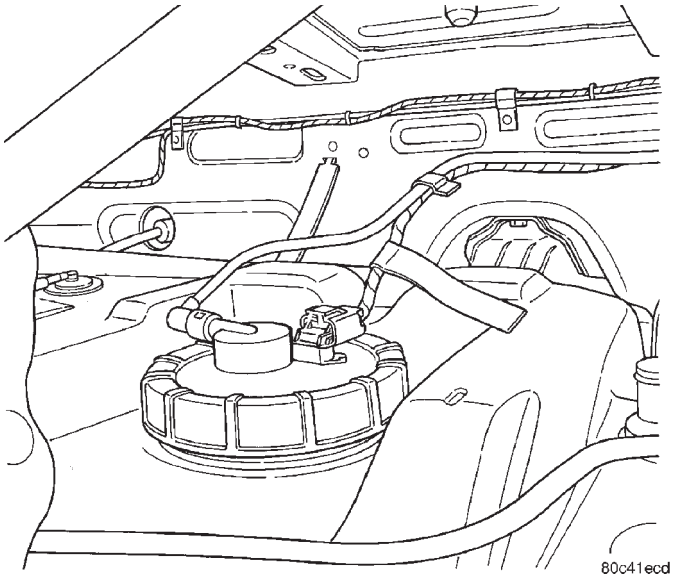

Fig. 14 Lowered Fuel Tank

(5) Install the negative battery cable.

(6) Install the air cleaner lid, connect the inlet air temperature sensor and makeup air hose.

EVAP CANISTER

REMOVAL

(1) Release fuel pressure, Refer to Fuel System Pressure Release Procedure in the Fuel Delivery section.

(2) Remove the air cleaner lid, disconnect the inlet air temperature sensor and makeup air hose.

(3) Remove the negative battery cable.

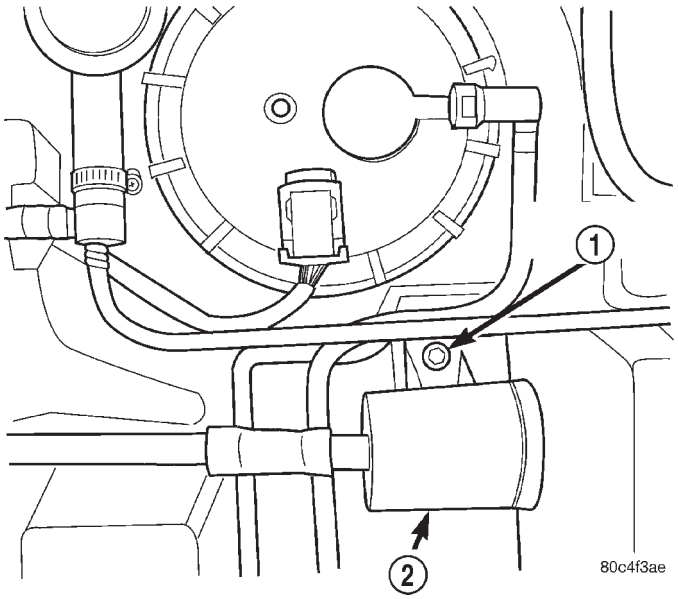

Fig. 15 LDP Filter

1 – ATTACHING SCREW
2 – LDP FILTER

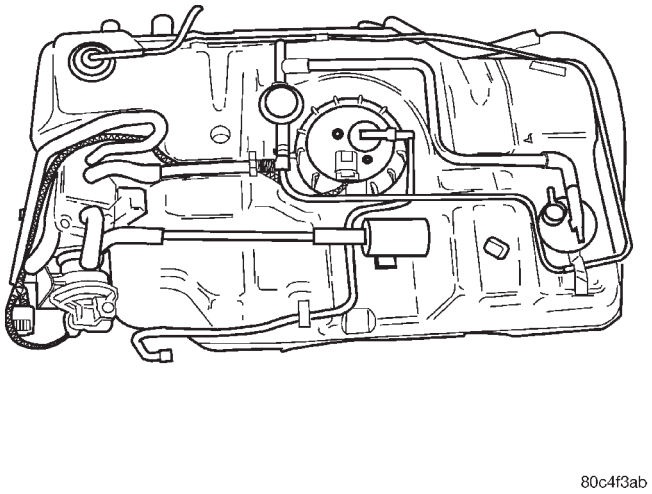

Fig. 16 Fuel Tank Assembly

(4) Raise vehicle and support.

(5) Drain fuel tank, refer to Draining Fuel Tank in the Fuel Delivery section (Fig. 18).

(6) Remove fuel tank and EVAP system, refer to the Fuel Tank removal/installation section in the Fuel Delivery section.

(7) Remove the push pin (Fig. 19).

(8) Remove hoses from EVAP canister.

(9) Spread spring clips (Fig. 20) on the side of EVAP canister and tip canister out and away from bracket tabs (Fig. 21).

INSTALLATION

(1) Install EVAP canister over bracket tabs (Fig. 21).

REMOVAL AND INSTALLATION (Continued)

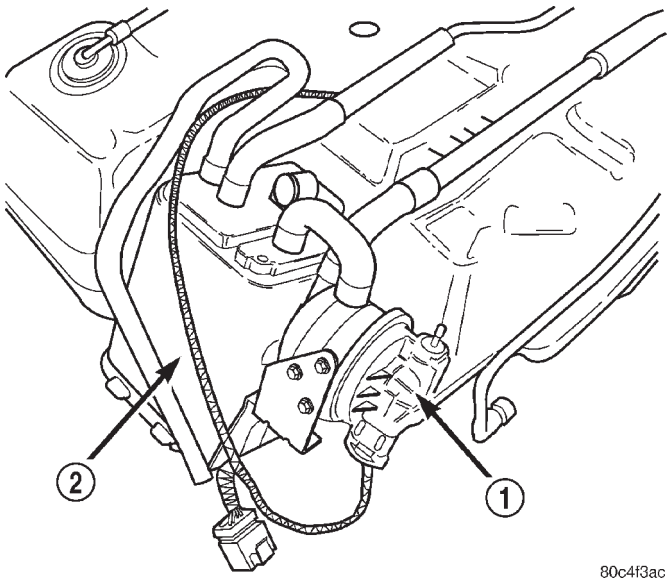

Fig. 17 EVAP System

1 – LDP
2 – EVAP CANISTOR

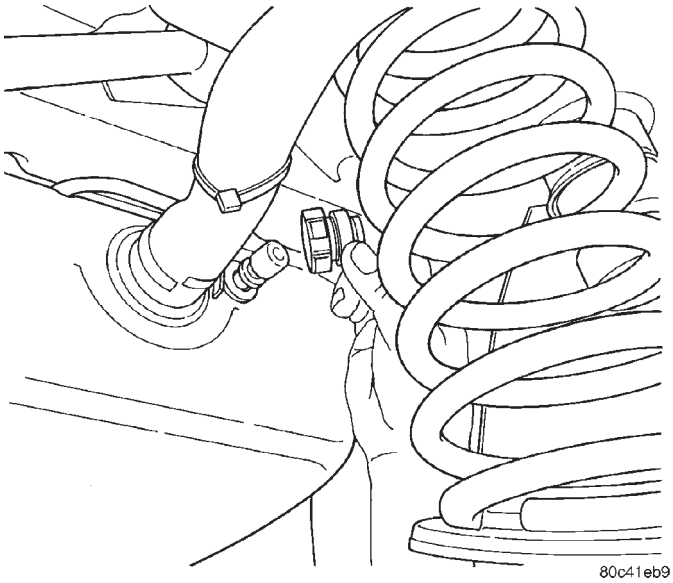

Fig. 18 Fuel Tank Drain

(2) Push canister back and into the bracket until the spring clips snap over the edge of the canister (Fig. 20).

(3) Install the push pin through the EVAP canister and the bracket and into the fuel tank (Fig. 19).

(4) Install hoses and lines.

(5) Install the fuel tank and EVAP system, refer to the Fuel Tank removal/installation section in the Fuel Delivery section.

(6) Lower vehicle.

(7) Install the negative battery cable.

(8) Install the air cleaner lid, connect the inlet air temperature sensor and makeup air hose.

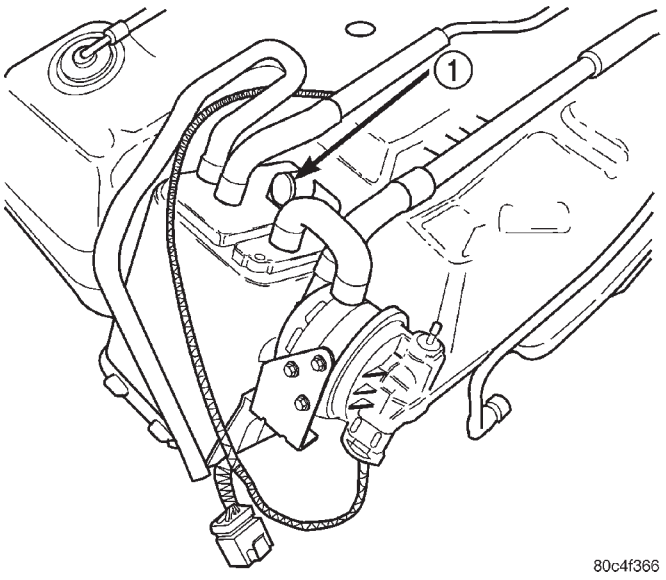

Fig. 19 EVAP Canister

1 – PUSH PIN

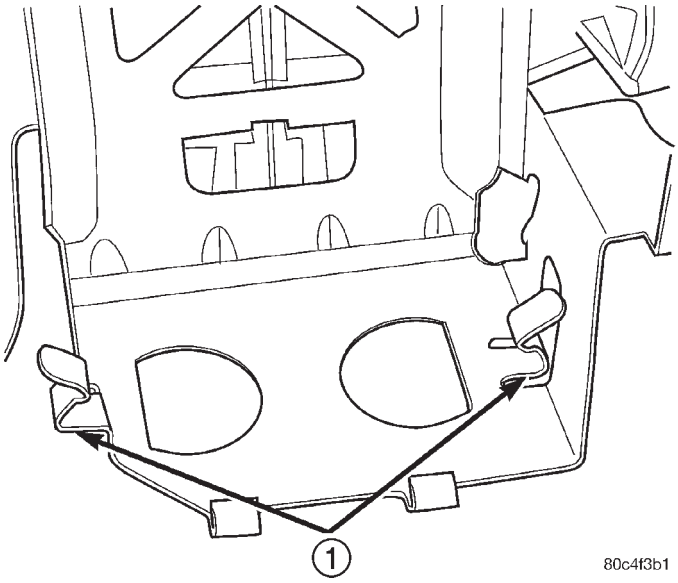

Fig. 20 Spring Clips

1 – SPRING CLIPS

(9) Fill fuel tank. Use the DRB scan tool to pressurize the fuel system. Check for leaks.

PROPORTIONAL PURGE SOLENOID

REMOVAL

(1) Remove the negative battery cable.

(2) Remove solenoid from bracket by pulling up on solenoid.

(3) Disconnect electrical connector from solenoid.

(4) Disconnect vacuum tubes from solenoid.

REMOVAL AND INSTALLATION (Continued)

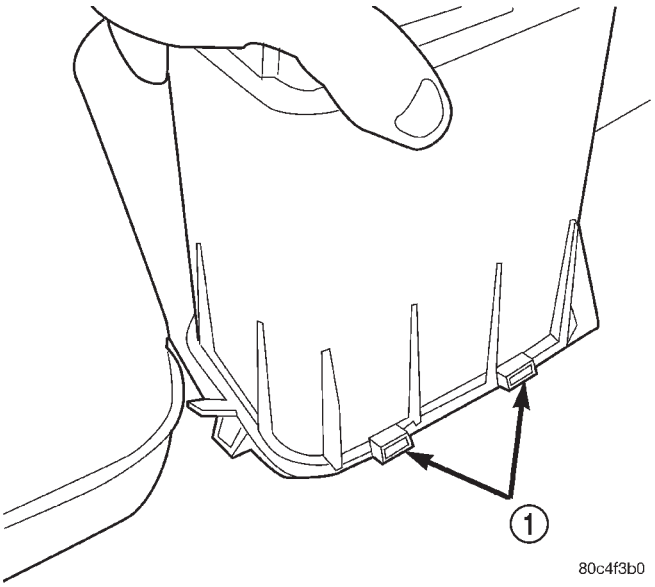

Fig. 21 Bracket Tabs

1 – TABS

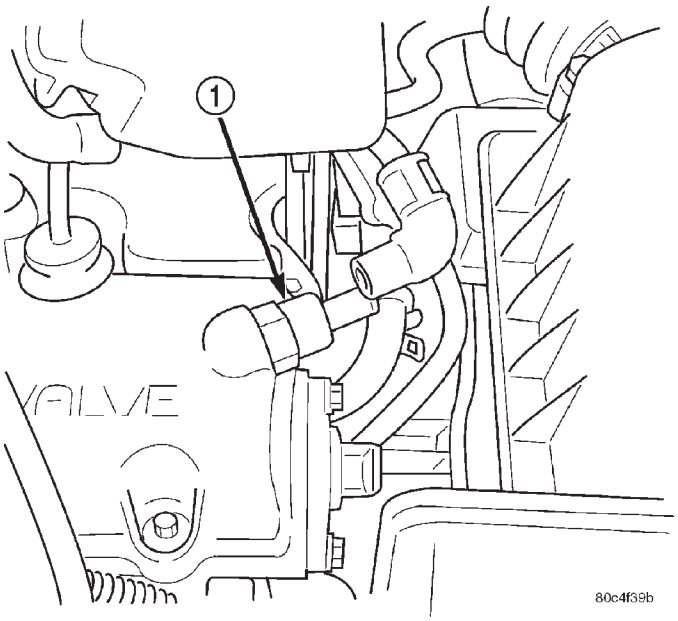

Fig. 22 PCV Valve

1 – PCV VALVE

INSTALLATION

The top of the solenoid has TOP printed on it. The solenoid will not operate unless it is installed correctly.

(1) Connect vacuum tube to solenoid.
(2) Connect electrical connector to solenoid.
(3) Install solenoid on bracket.
(4) Install the negative battery cable.

PCV VALVE

REMOVAL

(1) Remove hose to PCV valve (Fig. 22).
(2) Remove PCV valve (Fig. 23).

INSTALLATION

(1) Apply Mopar® Thread Sealant with Teflon to the 2nd and 3rd threads on the PCV valve, nearest to the chamfered end.

(2) Install PCV valve and tighten to 7.9 N·m (70 in. lbs.).

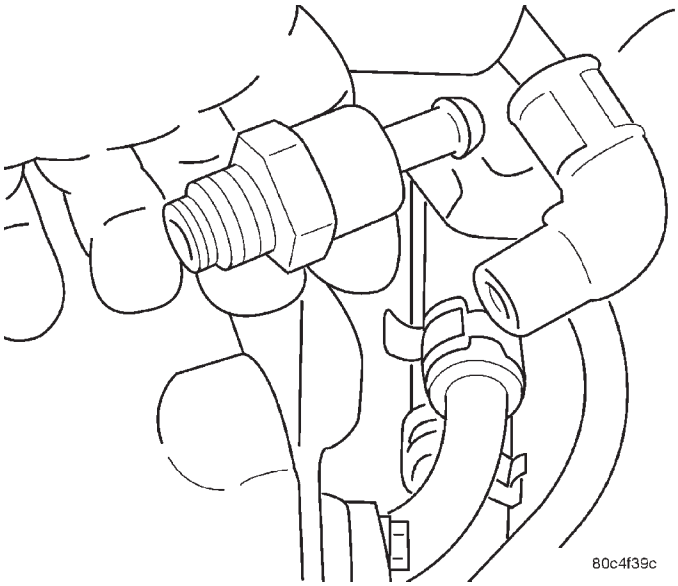

Fig. 23 PCV Valve Removed

(3) Connect hose.

EXHAUST GAS RECIRCULATION (EGR) SYSTEM

TABLE OF CONTENTS

	page
DESCRIPTION AND OPERATION	
EXHAUST GAS RECIRCULATION (EGR) SYSTEM	35
REMOVAL AND INSTALLATION	
EGR VALVE AND TRANSDUCER—2.4L	36
EGR TUBE—2.4L	37
SPECIFICATIONS	
TORQUE	38

DESCRIPTION AND OPERATION

EXHAUST GAS RECIRCULATION (EGR) SYSTEM

DESCRIPTION

The EGR system consists of (Fig. 1):

- EGR tube
- EGR valve
- Electric EGR Transducer
- Connecting hoses

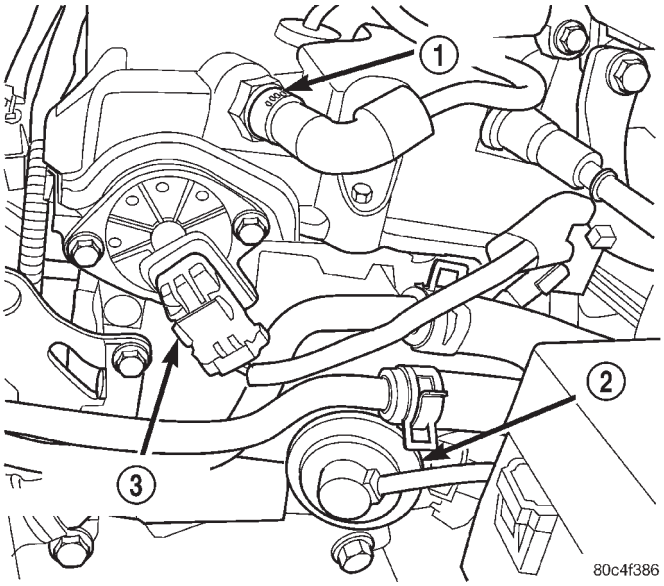

Fig. 1 EGR System—2.4L

1 – PCV VALVE
2 – EGR VALVE
3 – CAMSHAFT POSITION SENSOR

OPERATION

Refer to Monitored Systems - EGR Monitor in this group for more information.

The EGR system reduces oxides of nitrogen (NOx) in engine exhaust and helps prevent detonation (engine knock). Under normal operating conditions, engine cylinder temperature can reach more than 3000°F. Formation of NOx increases proportionally with combustion temperature. To reduce the emission of these oxides, the cylinder temperature must be lowered. The system allows a predetermined amount of hot exhaust gas to recirculate and dilute the incoming air/fuel mixture. The diluted air/fuel mixture reduces peak flame temperature during combustion.

The electric EGR transducer contains an electrically operated solenoid and a back-pressure transducer (Fig. 2). The Powertrain Control Module (PCM) operates the solenoid. The PCM determines when to energize the solenoid. Exhaust system back-pressure controls the transducer.

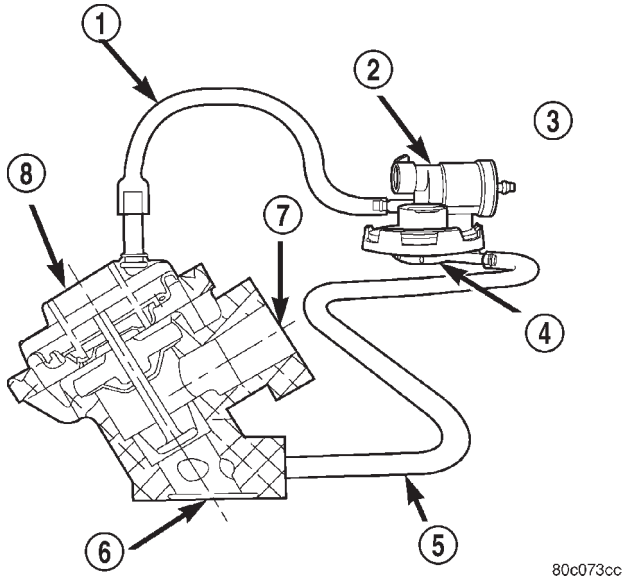

Fig. 2 Electric EGR Transducer

1 – VACUUM HOSE
2 – EGR VALVE CONTROL ASSEMBLY
3 – INTAKE MANIFOLD VACUUM
4 – TRANSDUCER PORTION OF CONTROL VALVE
5 – BACK PRESSURE HOSE
6 – TO CYLINDER HEAD
7 – TO INTAKE MANIFOLD
8 – EGR VALVE ASSEMBLY

DESCRIPTION AND OPERATION (Continued)

When the PCM energizes the solenoid, vacuum does not reach the transducer. Vacuum flows to the transducer when the PCM de-energizes the solenoid.

When exhaust system back-pressure becomes high enough, it fully closes a bleed valve in the transducer. When the PCM de-energizes the solenoid and back-pressure closes the transducer bleed valve, vacuum flows through the transducer to operate the EGR valve.

De-energizing the solenoid, but not fully closing the transducer bleed hole (because of low back-pressure), varies the strength of vacuum applied to the EGR valve. Varying the strength of the vacuum changes the amount of EGR supplied to the engine. This provides the correct amount of exhaust gas recirculation for different operating conditions.

This system does not allow EGR at idle.

A failed or malfunctioning EGR system can cause engine spark knock, sags or hesitation, rough idle, engine stalling and increased emissions.

REMOVAL AND INSTALLATION

EGR VALVE AND TRANSDUCER—2.4L

If the EGR system operates incorrectly, replace the entire EGR valve and transducer together. The EGR valve and electrical transducer are calibrated together.

REMOVAL

(1) Remove the air cleaner lid, disconnect the inlet air temperature sensor and makeup air hose.

(2) Remove the negative battery cable.

(3) Loosen the bolts at the intake manifold (Fig. 3).

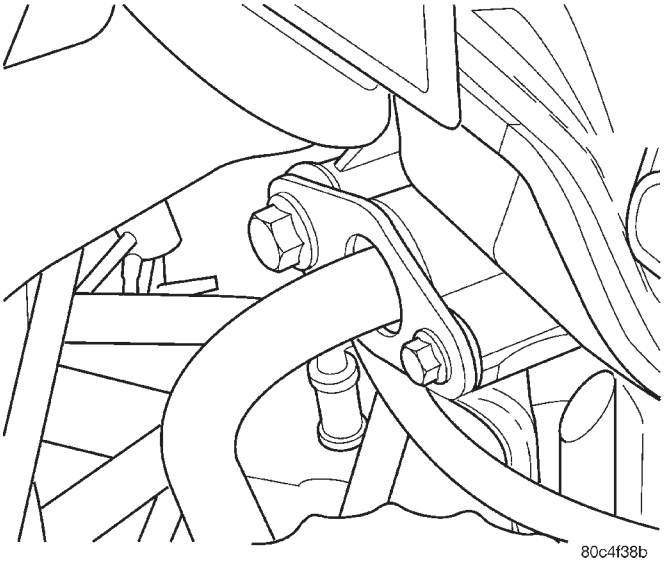

Fig. 3 EGR Tube at Intake Manifold

(4) Remove EGR tube bolts at EGR Valve.

(5) Unclip EGR transducer bracket (Fig. 4), (Fig. 5) and remove from bracket.

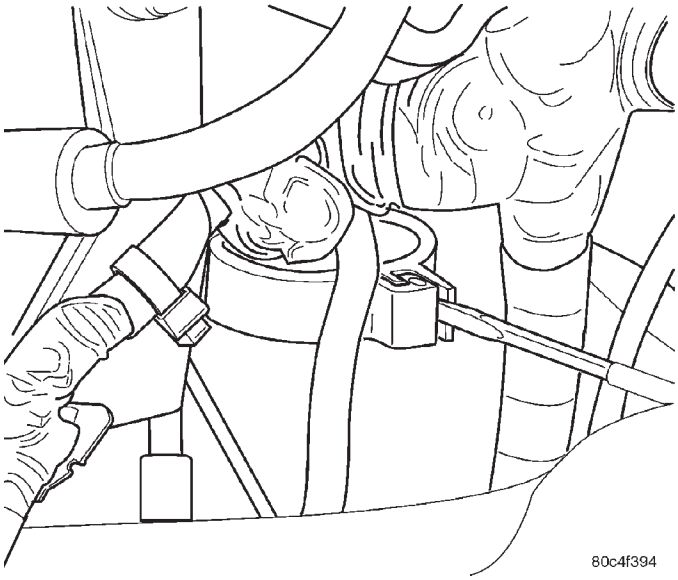

Fig. 4 EGR Transducer Bracket

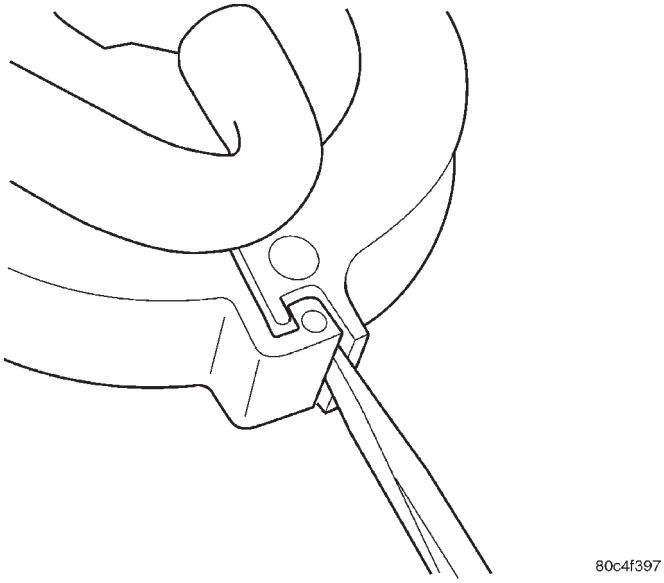

Fig. 5 EGR Transducer Bracket

(6) Disconnect the vacuum supply hose to EGR transducer solenoid (Fig. 6).

(7) Unlock the connector then disconnect the electrical connector from solenoid (Fig. 7).

(8) Remove the 2 bolt at EGR valve to cylinder head. Remove EGR valve and transducer.

(9) Clean gasket surfaces. Discard old gaskets. If necessary, clean EGR passages.

INSTALLATION

(1) Connect vacuum supply tube to solenoid (Fig. 6).

(2) Attach electrical connector to solenoid (Fig. 7).

REMOVAL AND INSTALLATION (Continued)

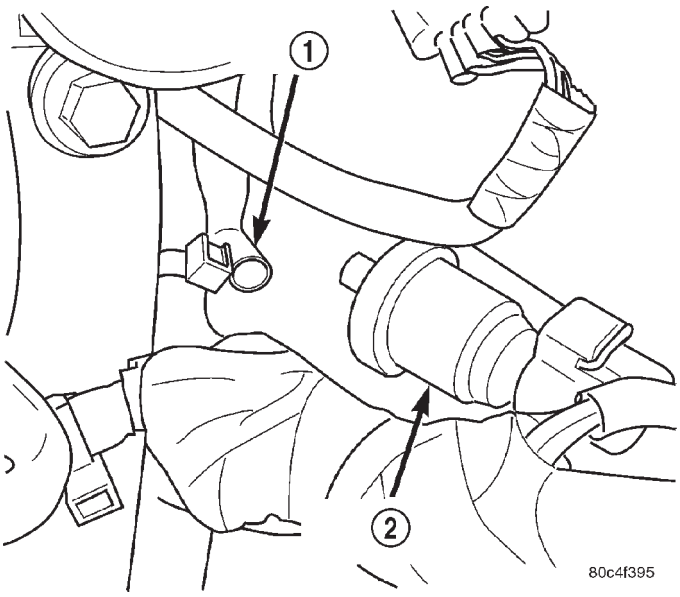

Fig. 6 Vacuum Hose

1 – VACUUM HARNESS
2 – EGR SOLENOID

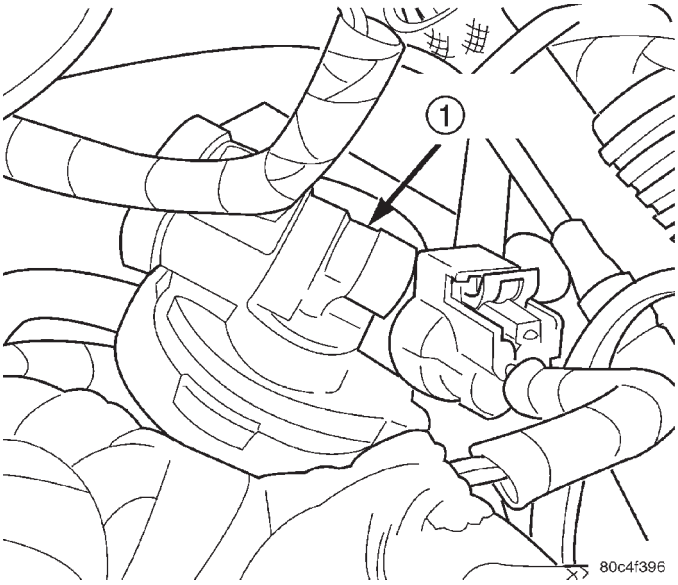

Fig. 7 Electrical Connector

1 – EGR SOLENOID

(3) Install EGR transducer into the bracket and snap closed (Fig. 5).

(4) Loosely install EGR valve with new gaskets.

(5) Finger tighten EGR tube fasteners.

(6) Tighten EGR valve mounting screws to 22 N·m (195 in. lbs.) torque.

(7) Tighten EGR tube fasteners to 11 N·m (97 in. lbs.) torque.

NOTE: Make sure that the hoses are routed away from the hot EGR tube and Valve and clipped.

(8) Install the negative battery cable.

(9) Install the air cleaner lid, connect the inlet air temperature sensor and makeup air hose.

EGR TUBE—2.4L

The EGR tube attaches to the intake manifold plenum.

REMOVAL

(1) Remove screws attaching EGR tube to intake manifold (Fig. 8).

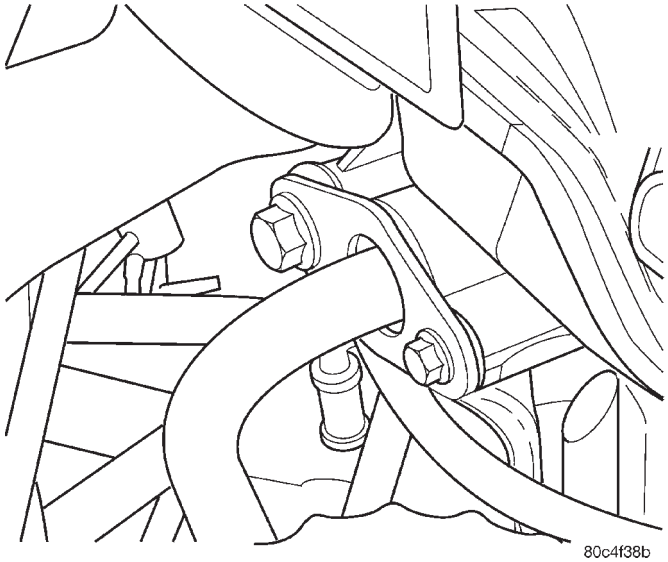

Fig. 8 EGR Tube Stud Bolts

(2) Remove EGR tube to EGR valve screws.

(3) Remove EGR tube. Clean gasket surfaces. Discard old gasket. If necessary, clean EGR passages. Do not loose the seal on EGR tube at intake manifold (Fig. 9).

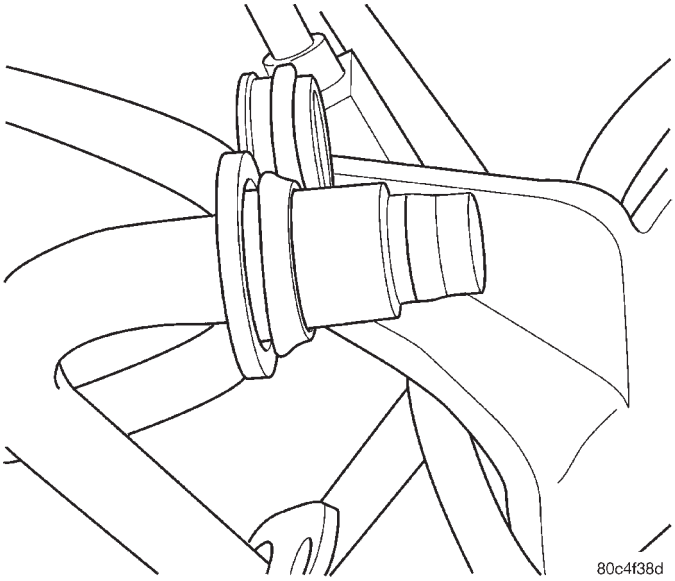

Fig. 9 EGR Tube Seal

REMOVAL AND INSTALLATION (Continued)

INSTALLATION

(1) Loosely install the EGR tube and fasteners with new gaskets and seal in the proper location and the small lip facing the end of the tube (Fig. 9).

(2) Tighten the EGR tube to intake manifold plenum screws to 11 N·m (97 in. lbs) torque.

(3) Tighten the EGR tube to EGR valve screws to 11 N·m (97 in. lbs.) torque.

NOTE: Make sure that the hoses are routed away from the hot EGR tube and Valve and clipped.

SPECIFICATIONS

TORQUE

Description	Torque
EGR valve to cyl. head	22 N·m (195 in. lbs.)
EGR tube to EGR valve	11 N·m (97 in. lbs.)
EGR tube to Intake Manifold 6mm	11 N·m (97 in. lbs.)
EGR tube to Intake Manifold 8mm	22 N·m (195 in. lbs.)
LDP screws	3.9 N·m (35 in. lbs.)

SERVICE MANUAL COMMENTS

What features do you find most useful? _____

_____

_____

_____

What errors have you found? Please include page number. _____

_____

_____

_____

_____

What topics are hard to locate, confusing, or not covered completely? _____

_____

_____

_____

_____

What comments or suggestions do you have? _____

_____

_____

_____

_____

Your Name: _____ **Dealership/Distributor:** _____

Address: _____

_____

Vehicle Identification Number _____

Manual Name, Year, Language and Number: _____

All comments become property of DaimlerChrysler International and may be used without compensation.

Fold Here

Place
Stamp
Here

DaimlerChrysler International Operations
Attn. Publications Dept.
CIMS 486-02-70
800 Chrysler Drive
Auburn Hills, MI 48326-2757

Fold Here